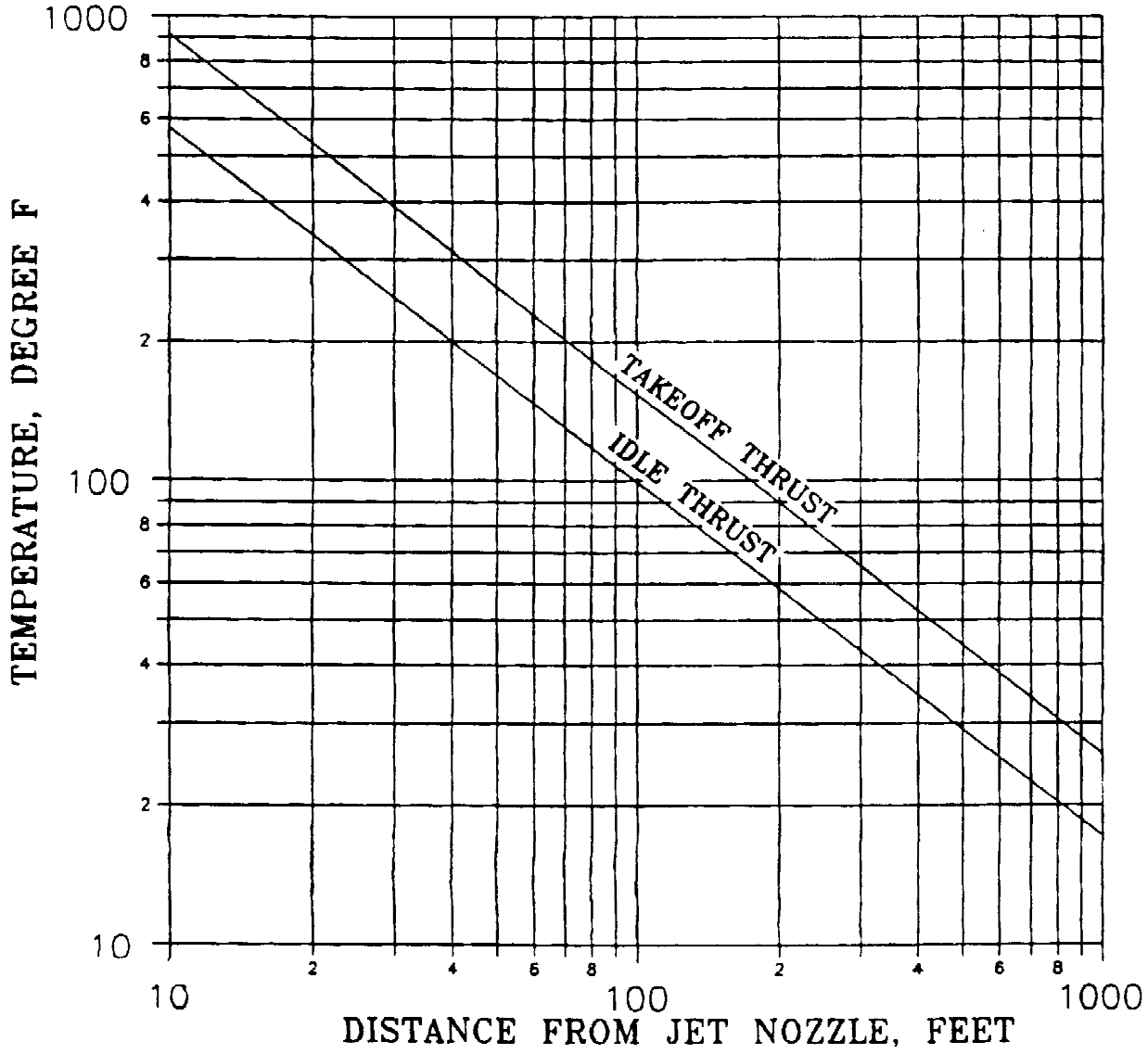

Figure E-94. C-137B/C, Temperature - Distance Curves

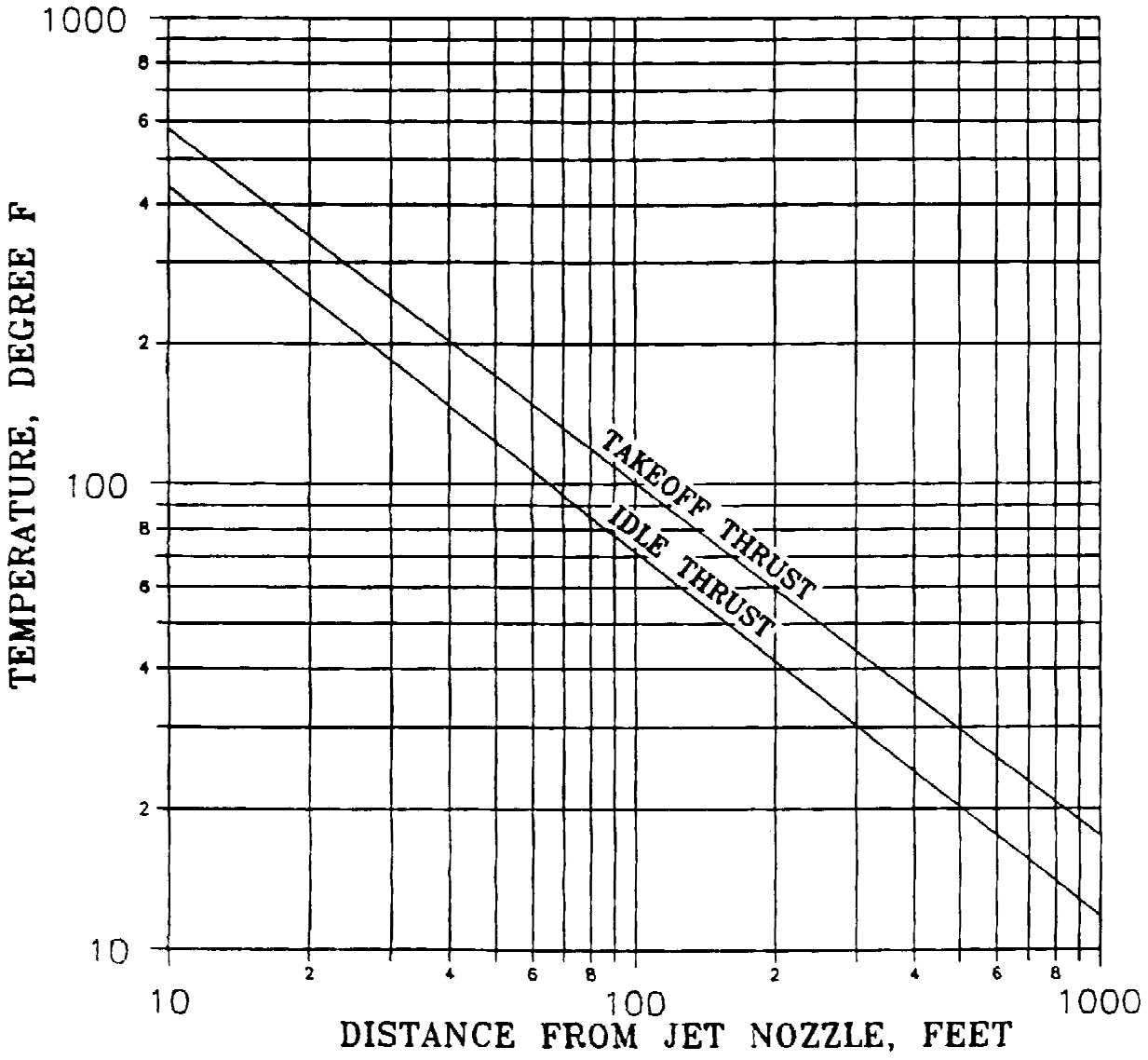

Figure E-95. C-140A/B, Temperature - Distance Curves

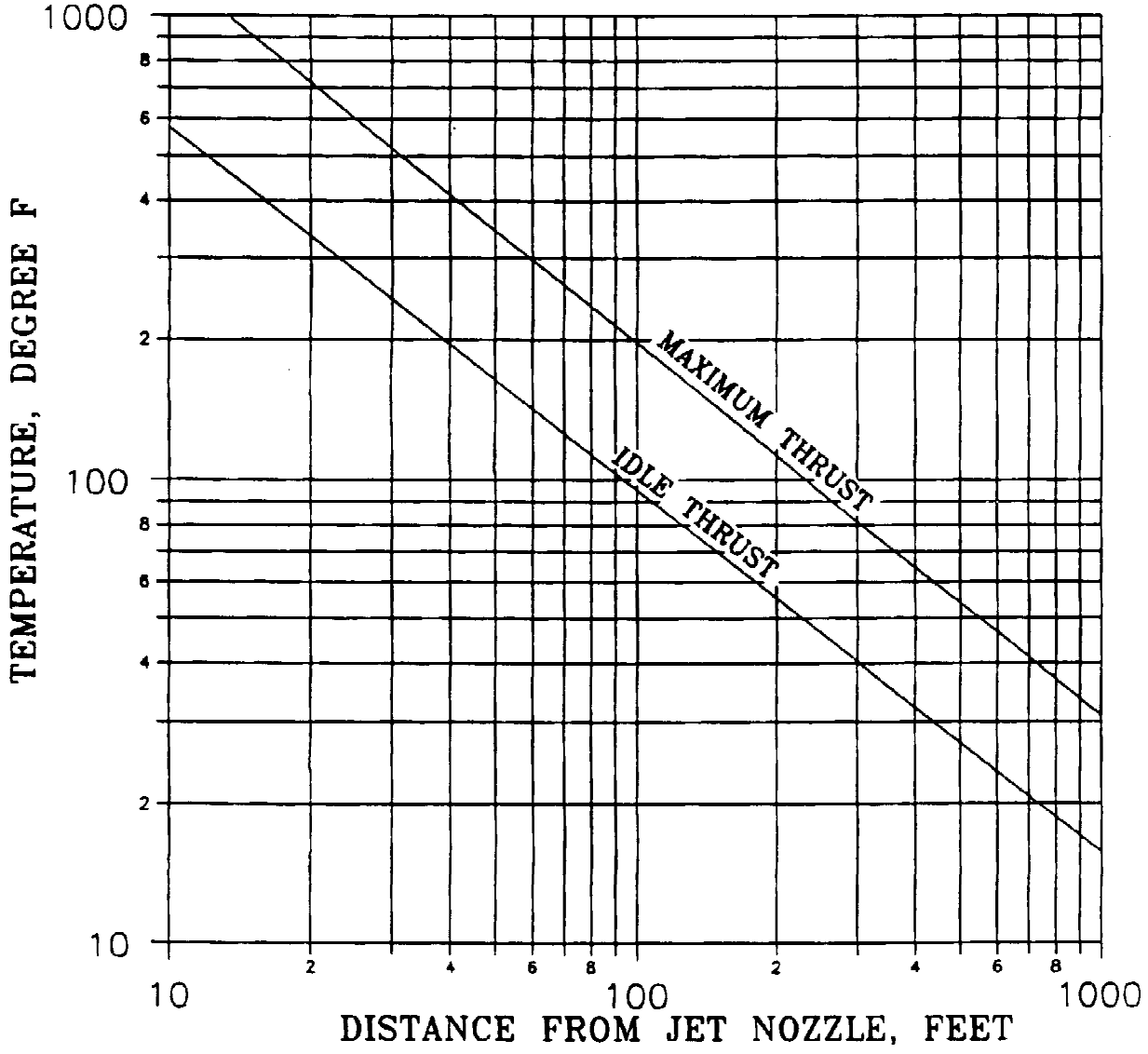

Figure E-96. C-141A/B, Temperature - Distance Curves

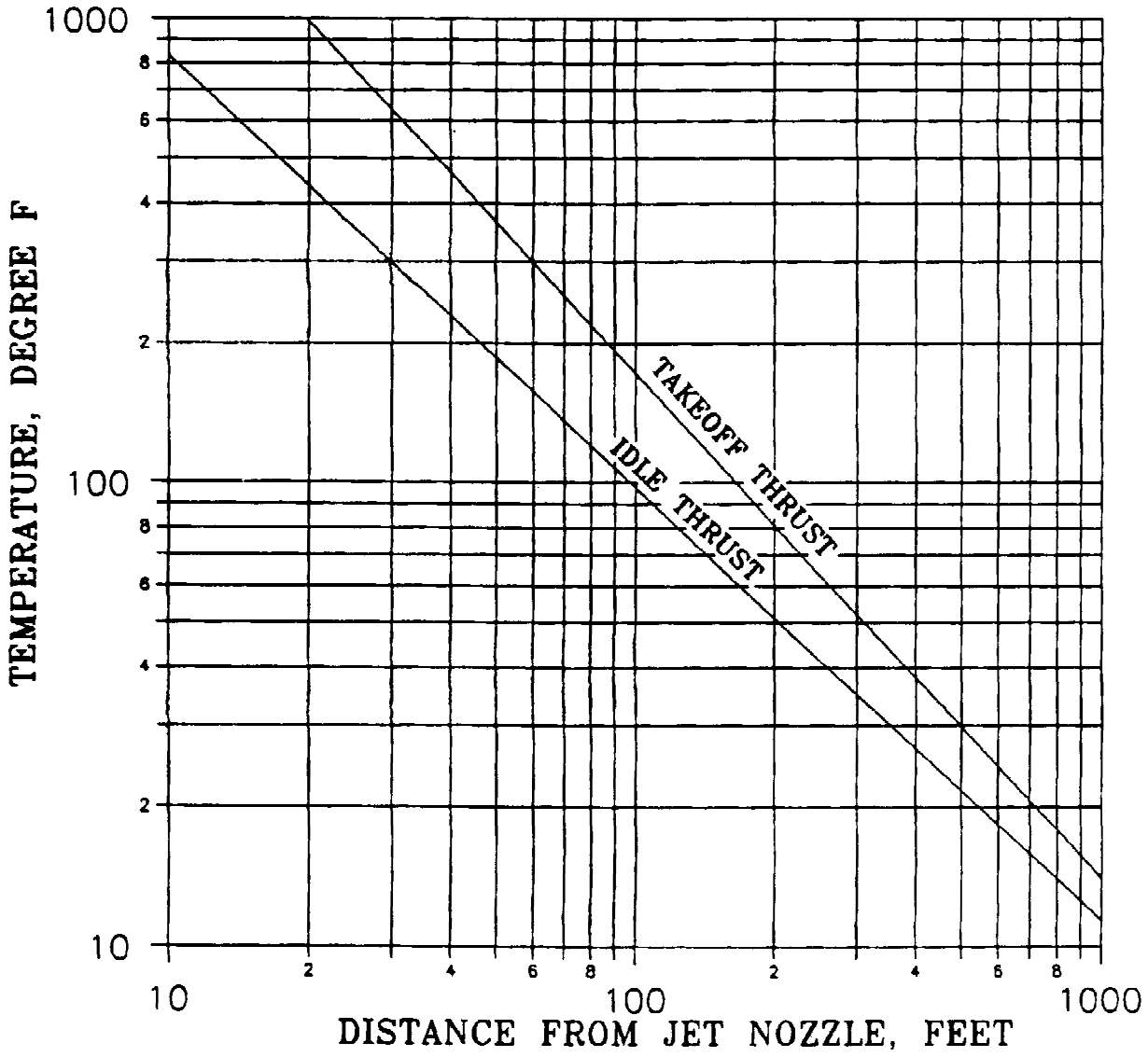

Figure E-97. KC-10A, Temperature - Distance Curves

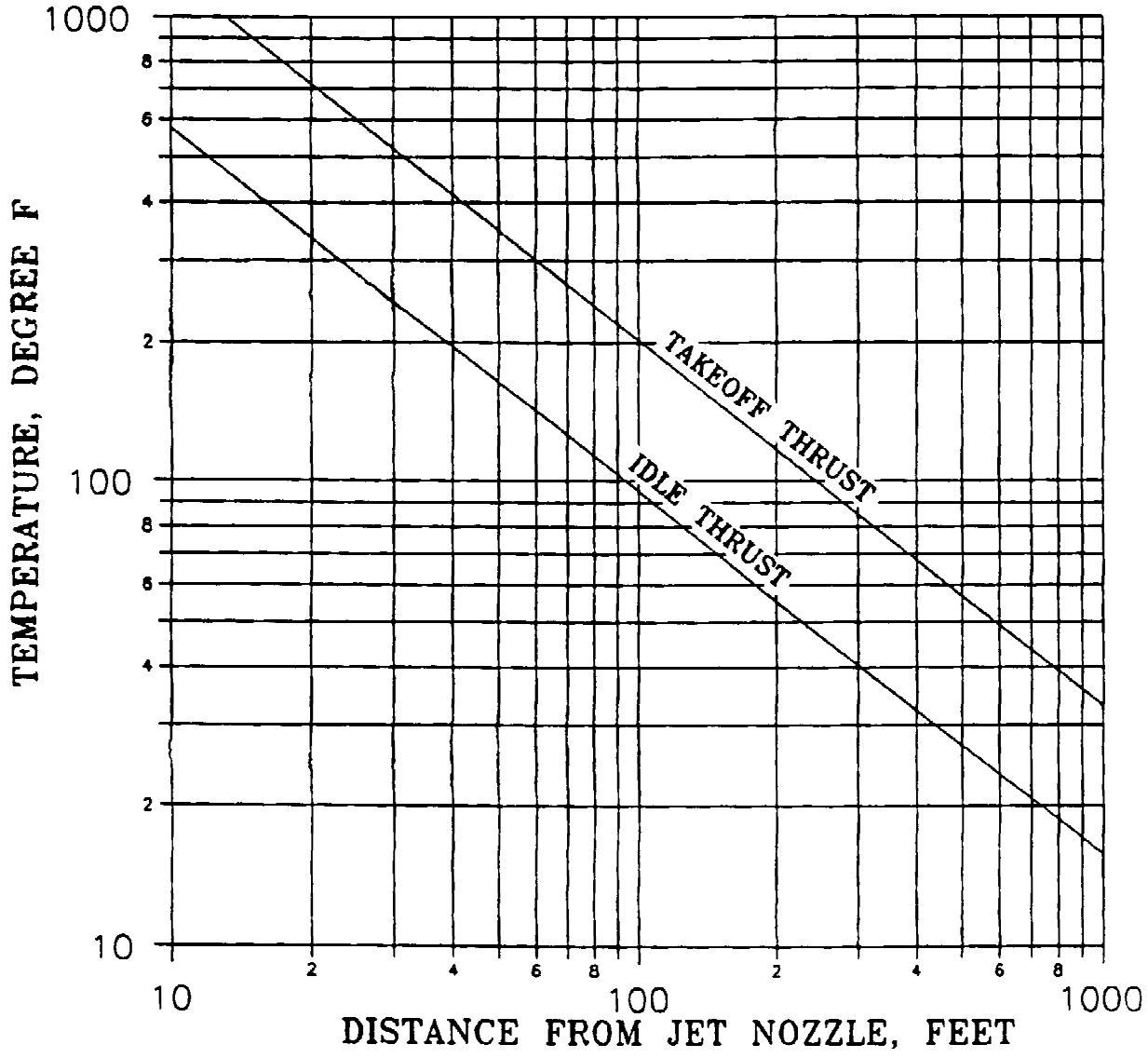

Figure E-98. E-3A/B/C, Temperature - Distance Curves

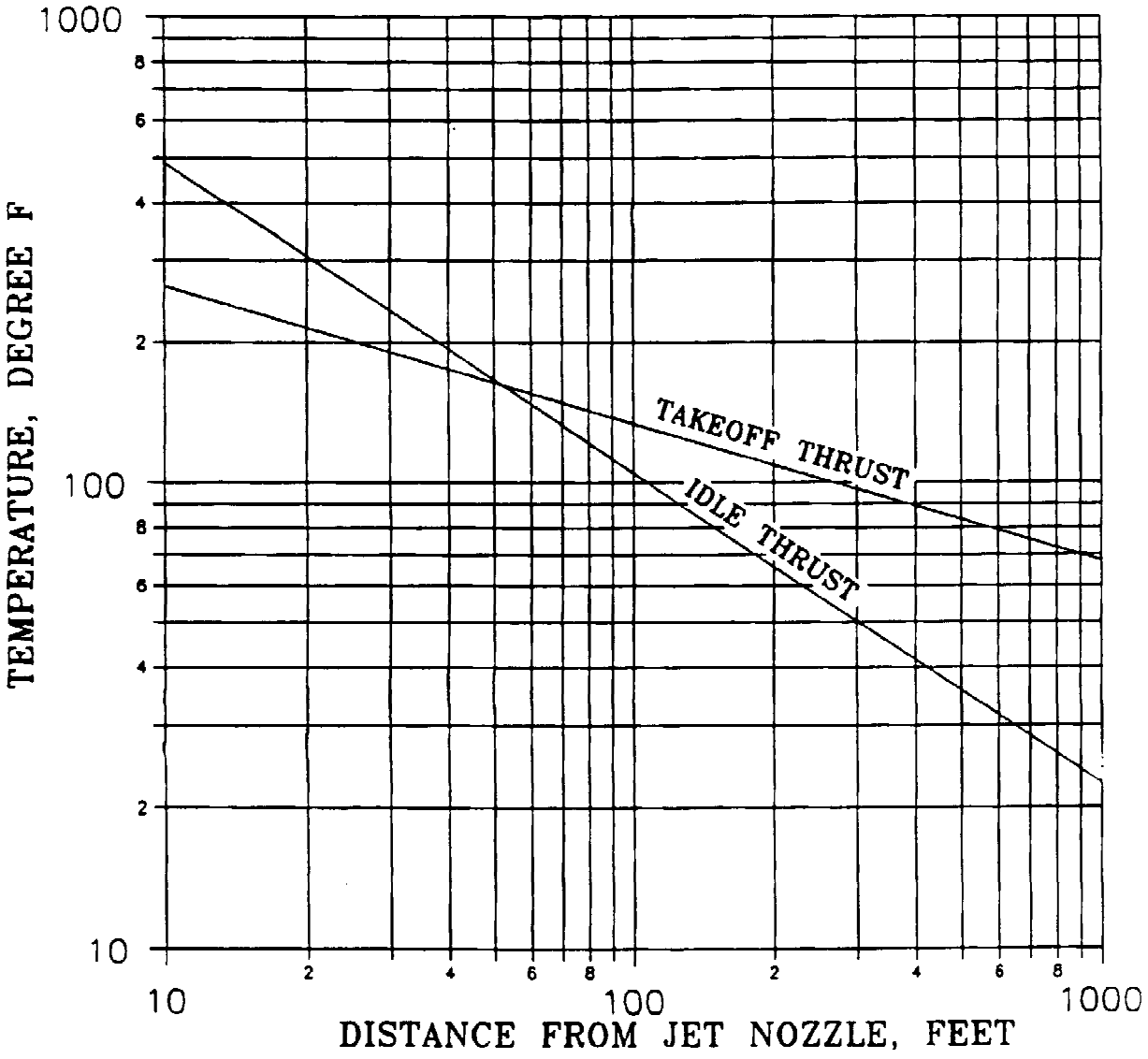

Figure E-99. E-4A/B, Temperature - Distance Curves

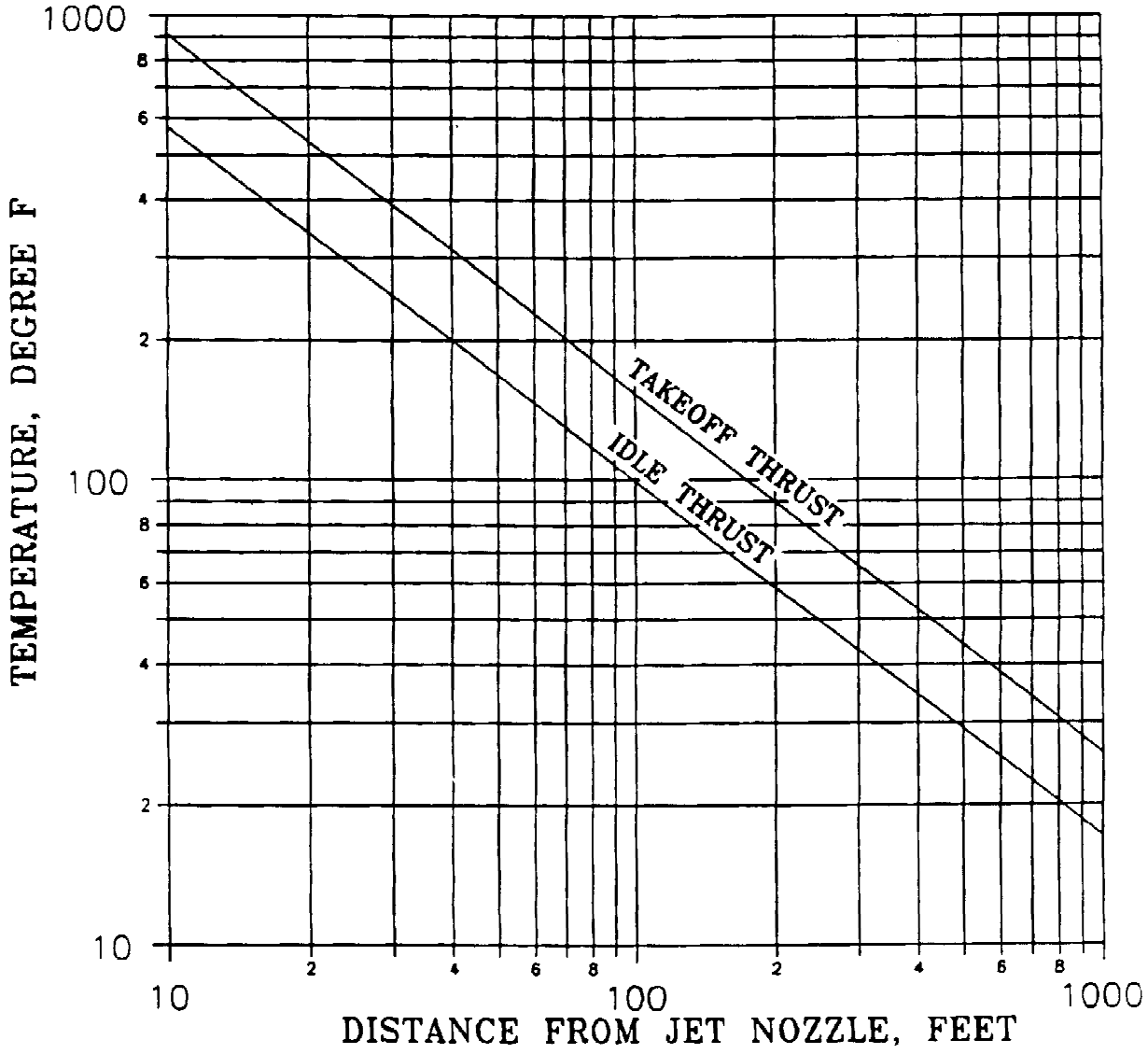

Figure E-100. EC-18B, Temperature - Distance Curves

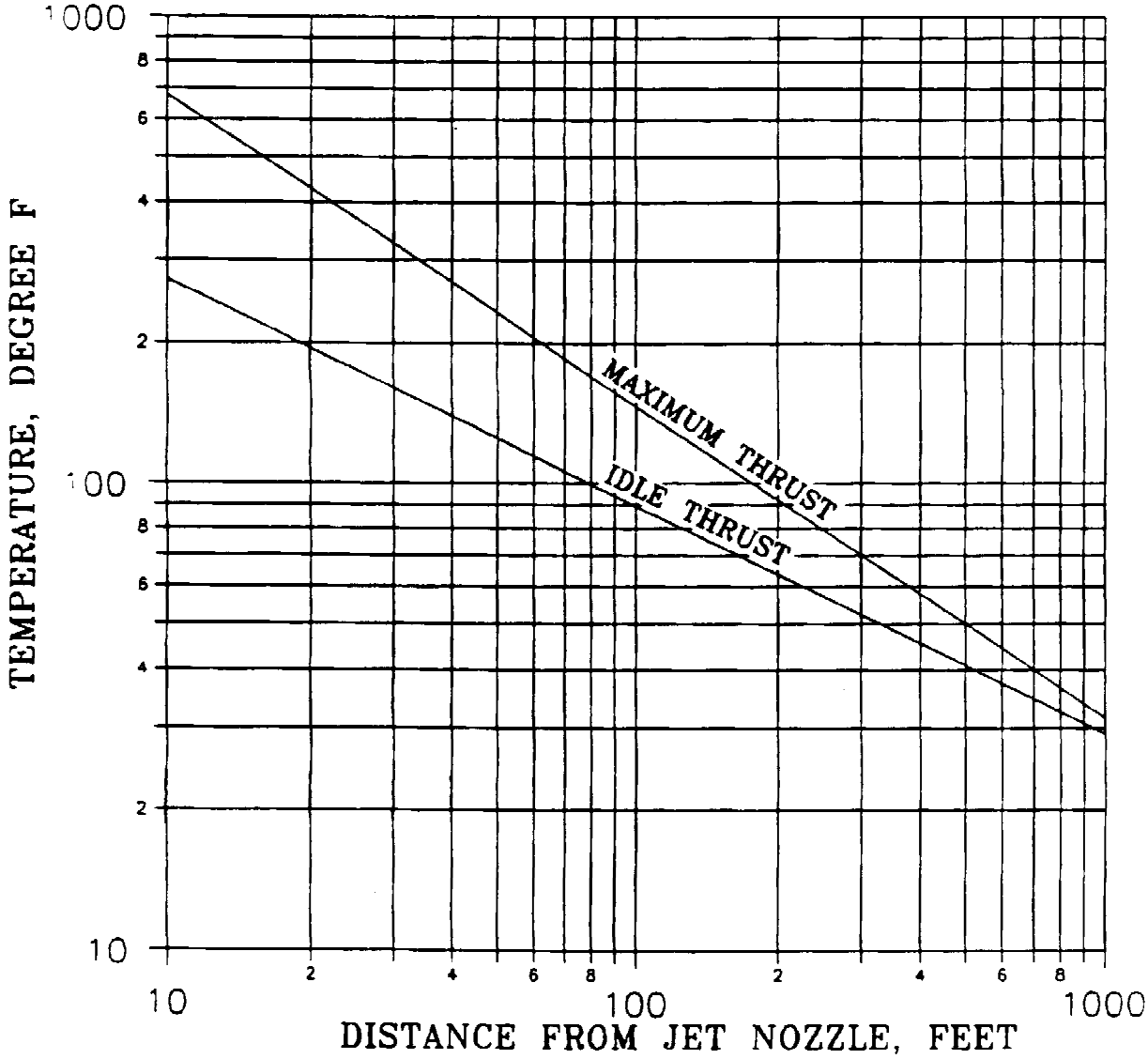

Figure E-101. EC-135A/G/L, Temperature - Distance Curves

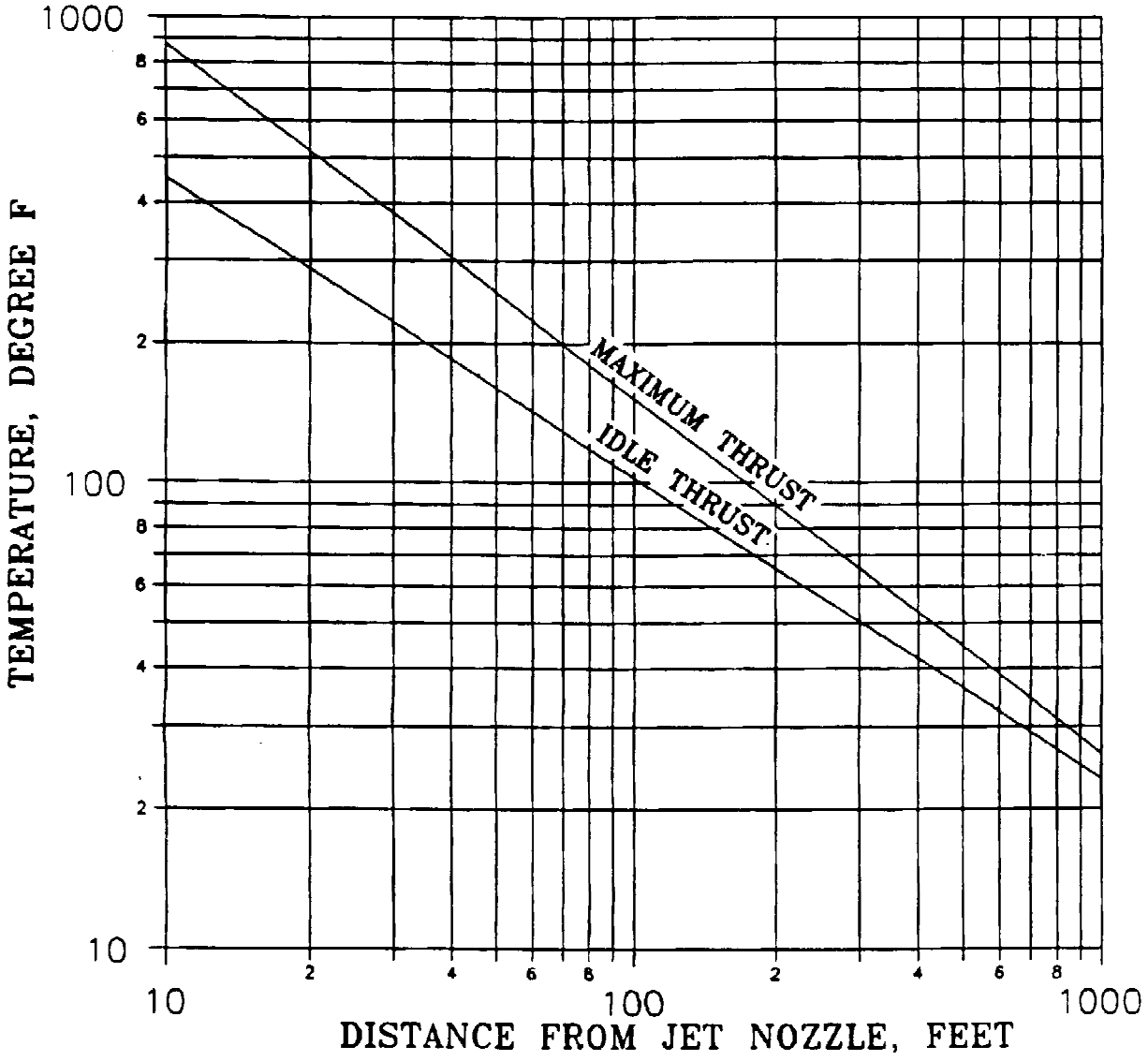

Figure E-102. EC-135C/E/H/J/K/P/Y, RC-135S/U/V/W, and WC-135B, Temperature - Distance Curves

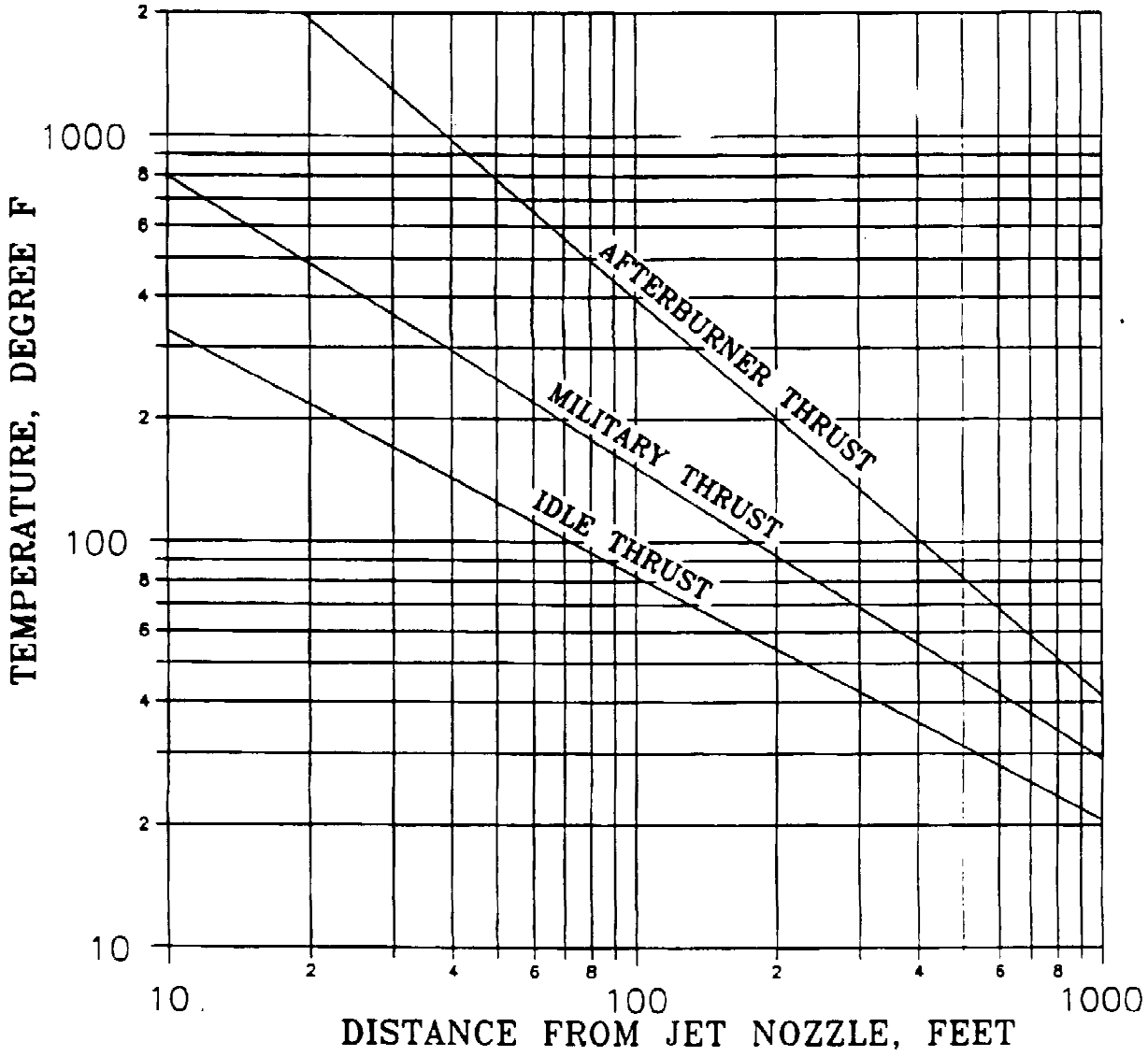

Figure E-103. EF-111A, Temperature - Distance Curves

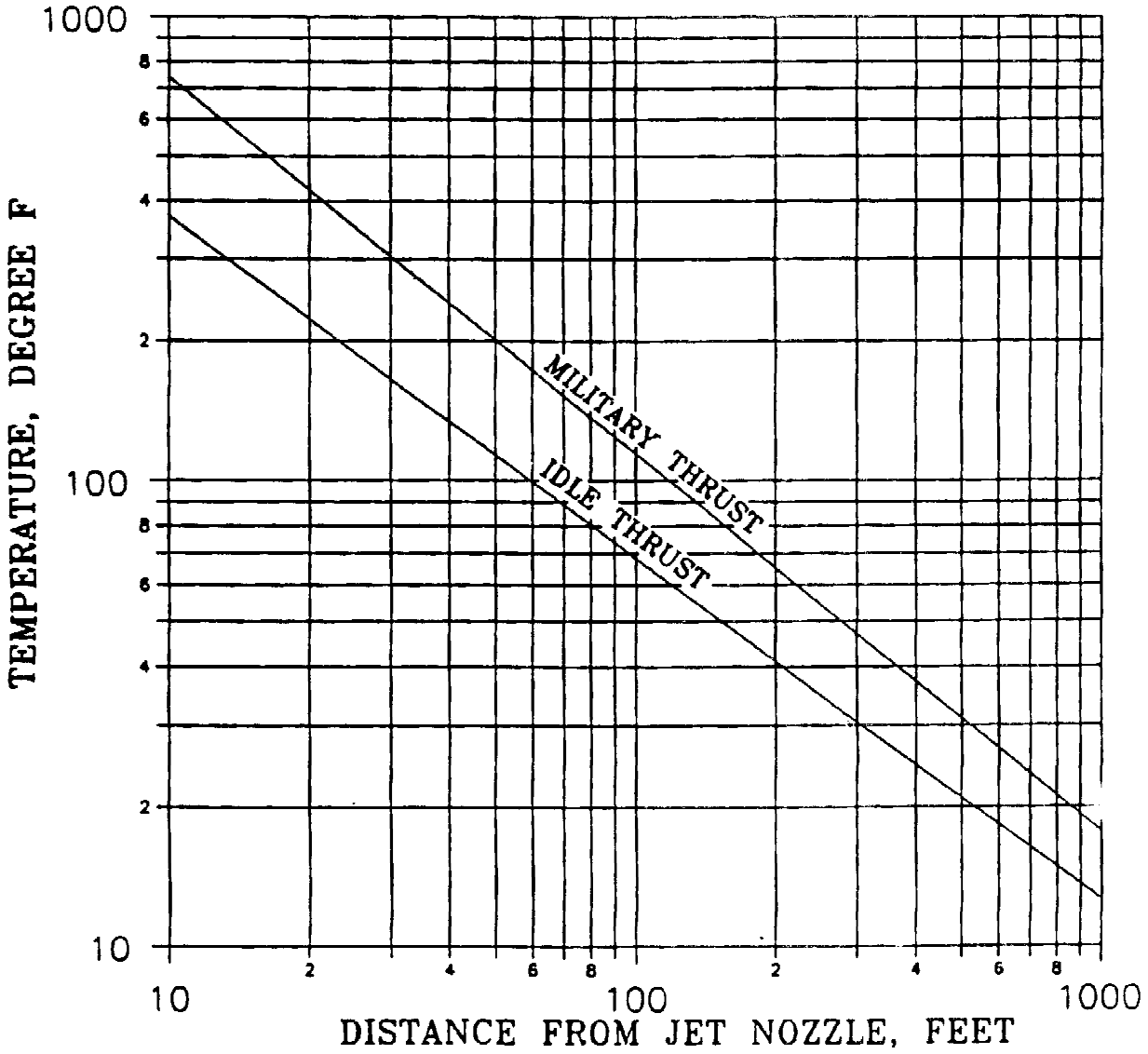

Figure E-107. A-7D/K, Temperature - Distance Curves

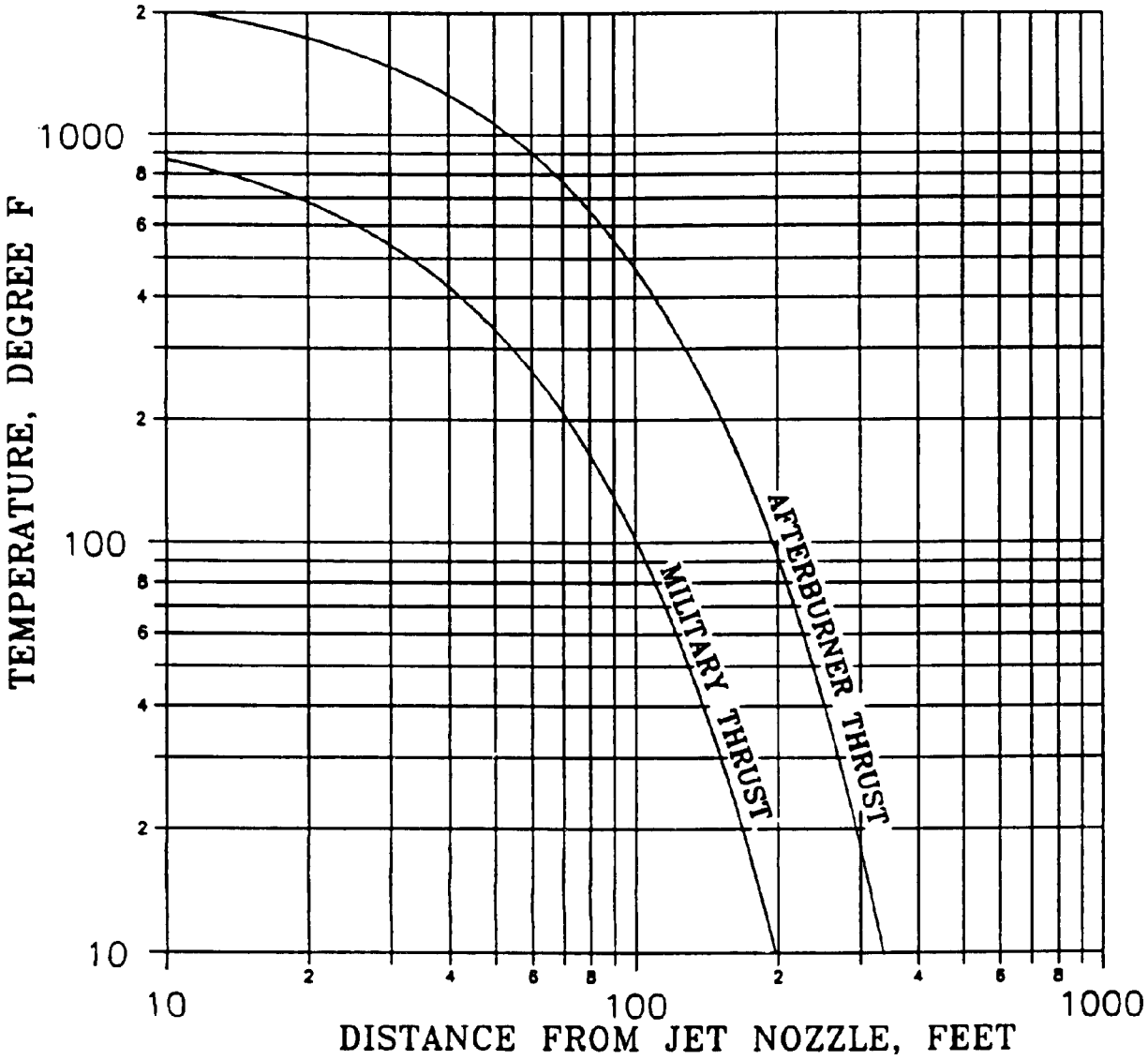

Figure E-106. RF-4C, Temperature - Distance Curves

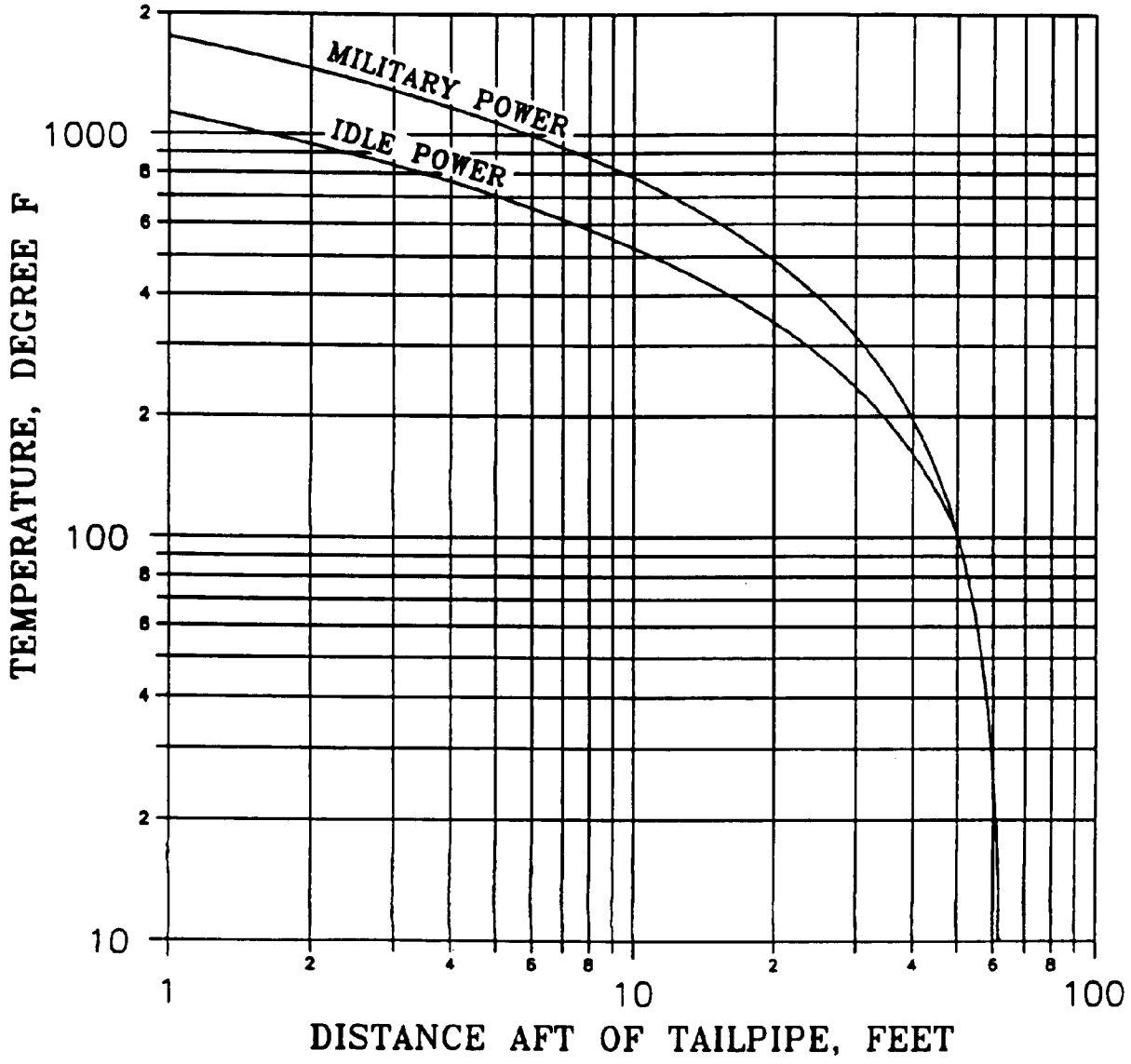

Figure E-105. OV-1B/C/D, Temperature - Distance Curves

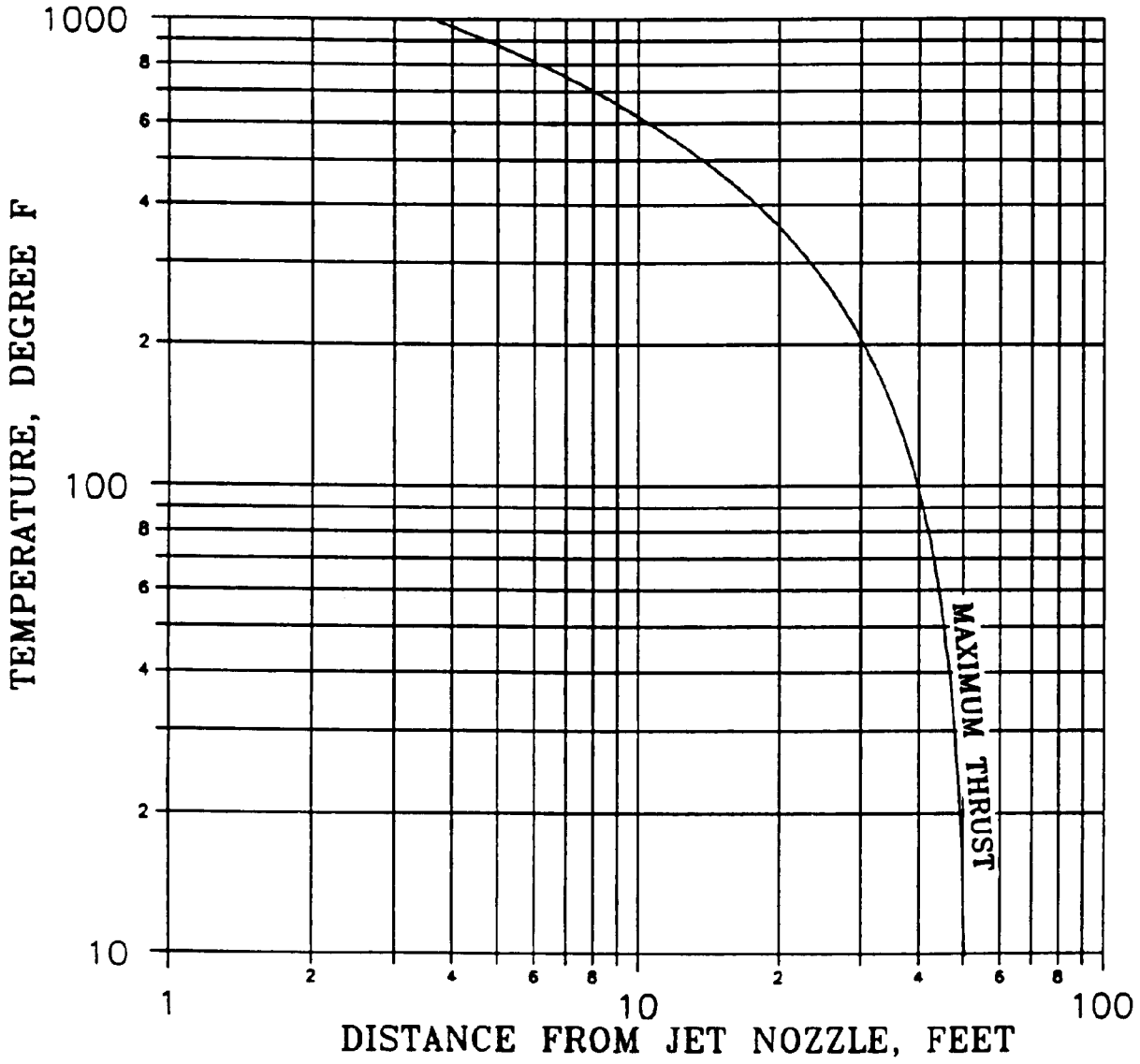

Figure E-104. OA-37B, Temperature - Distance Curve

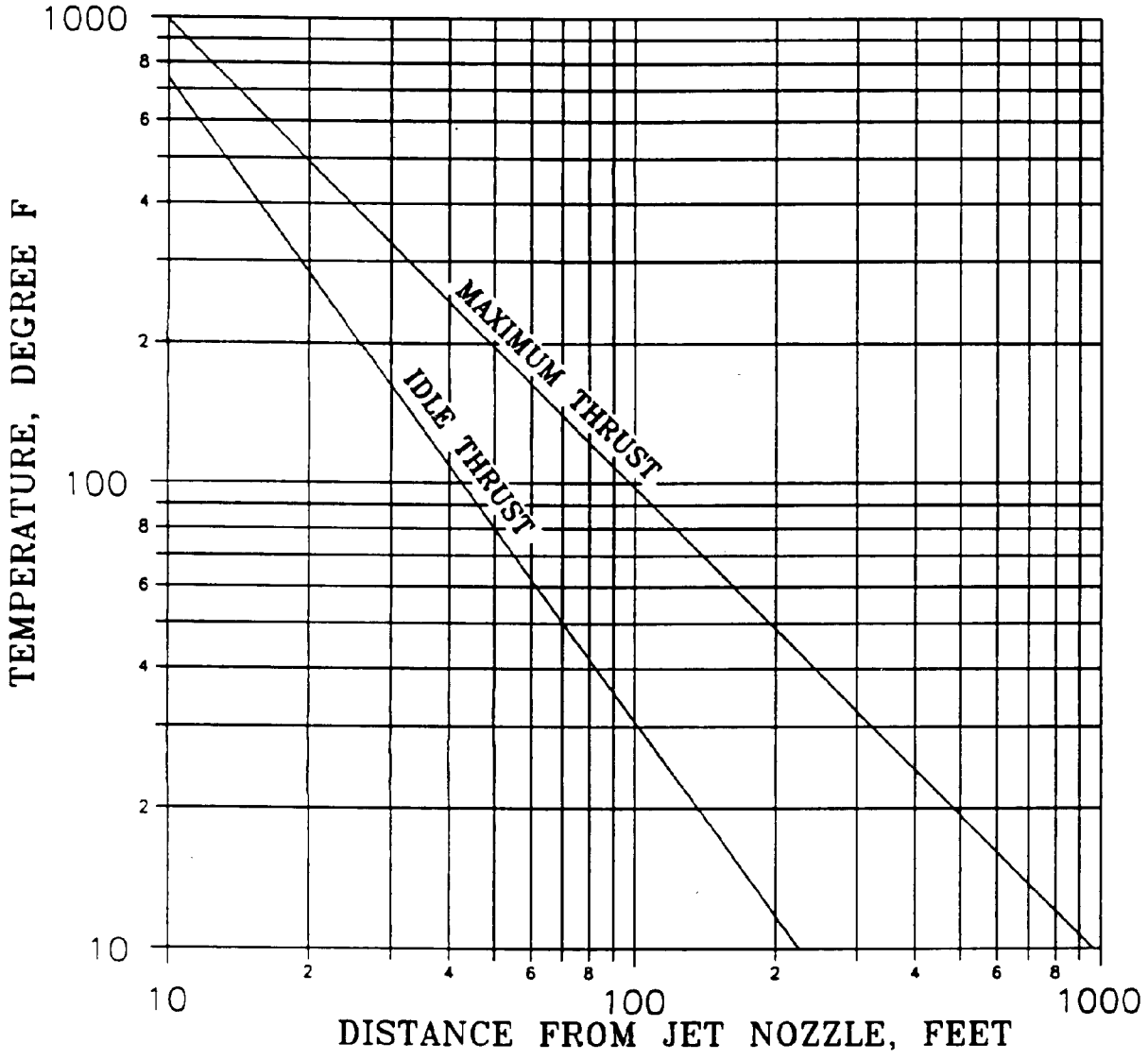

Figure E-108. A-10A, Temperature - Distance Curves

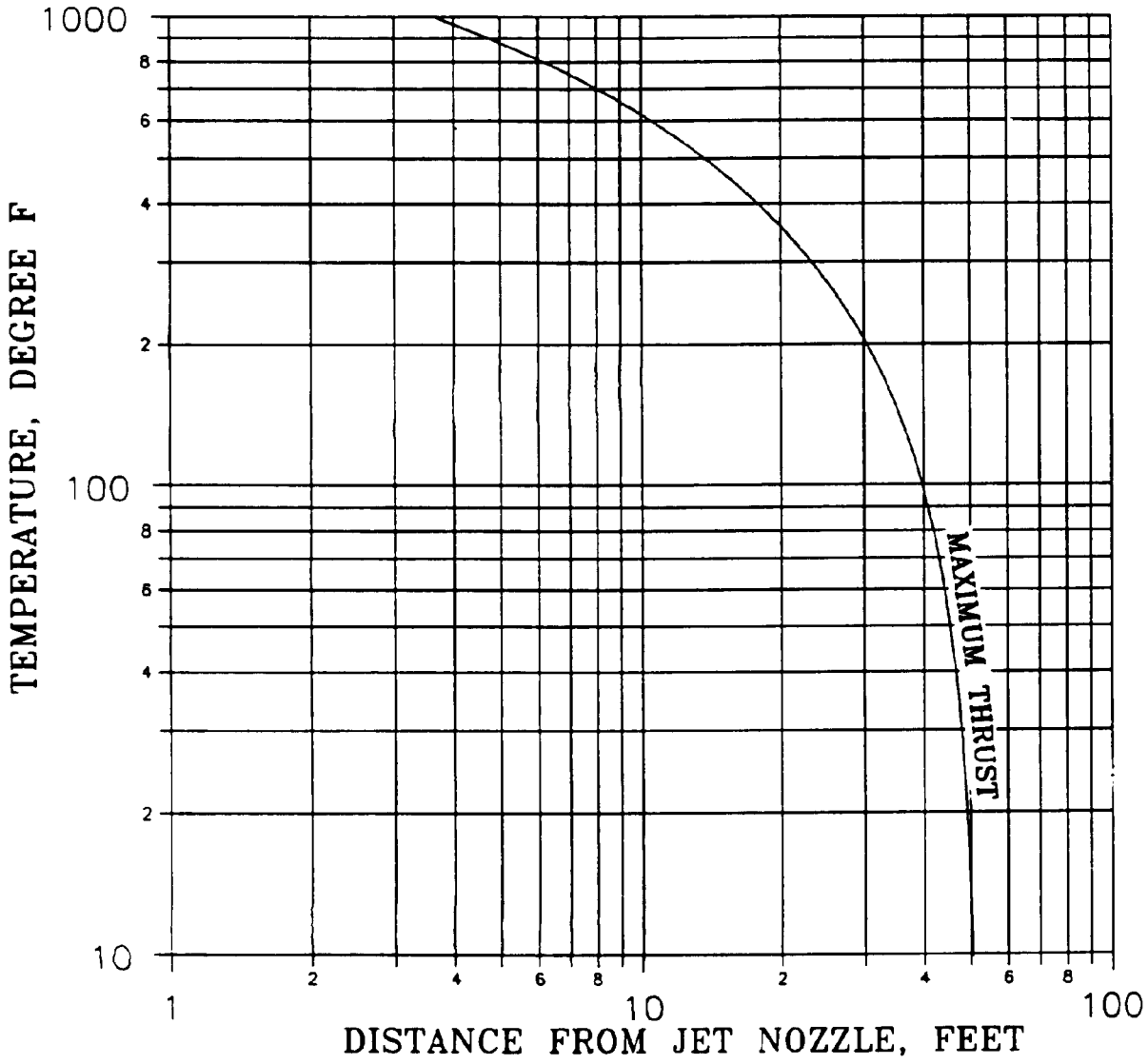

Figure E-109. A-37B, Temperature - Distance Curve

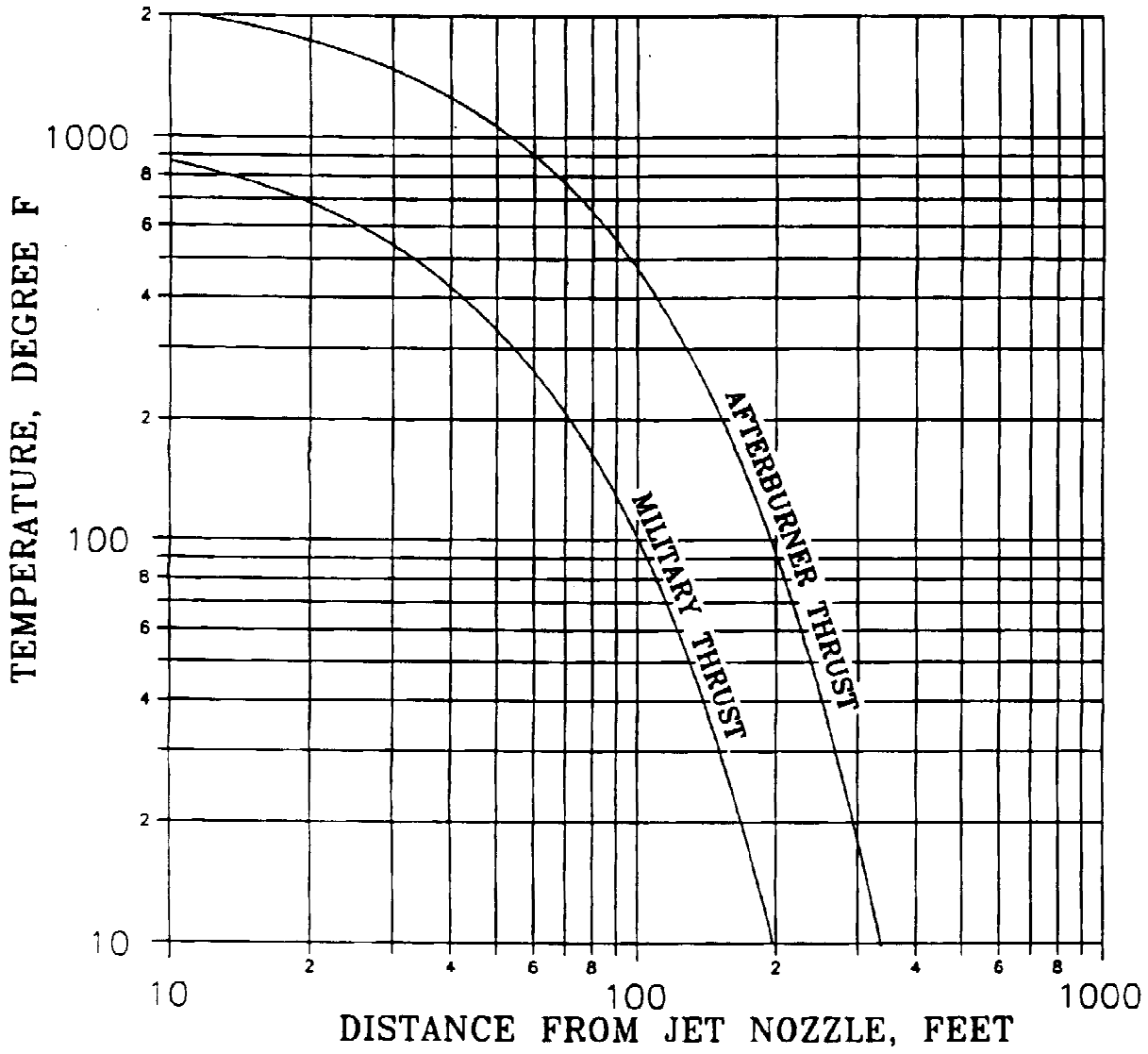

Figure E-110. F-4C/D/E, Temperature - Distance Curves

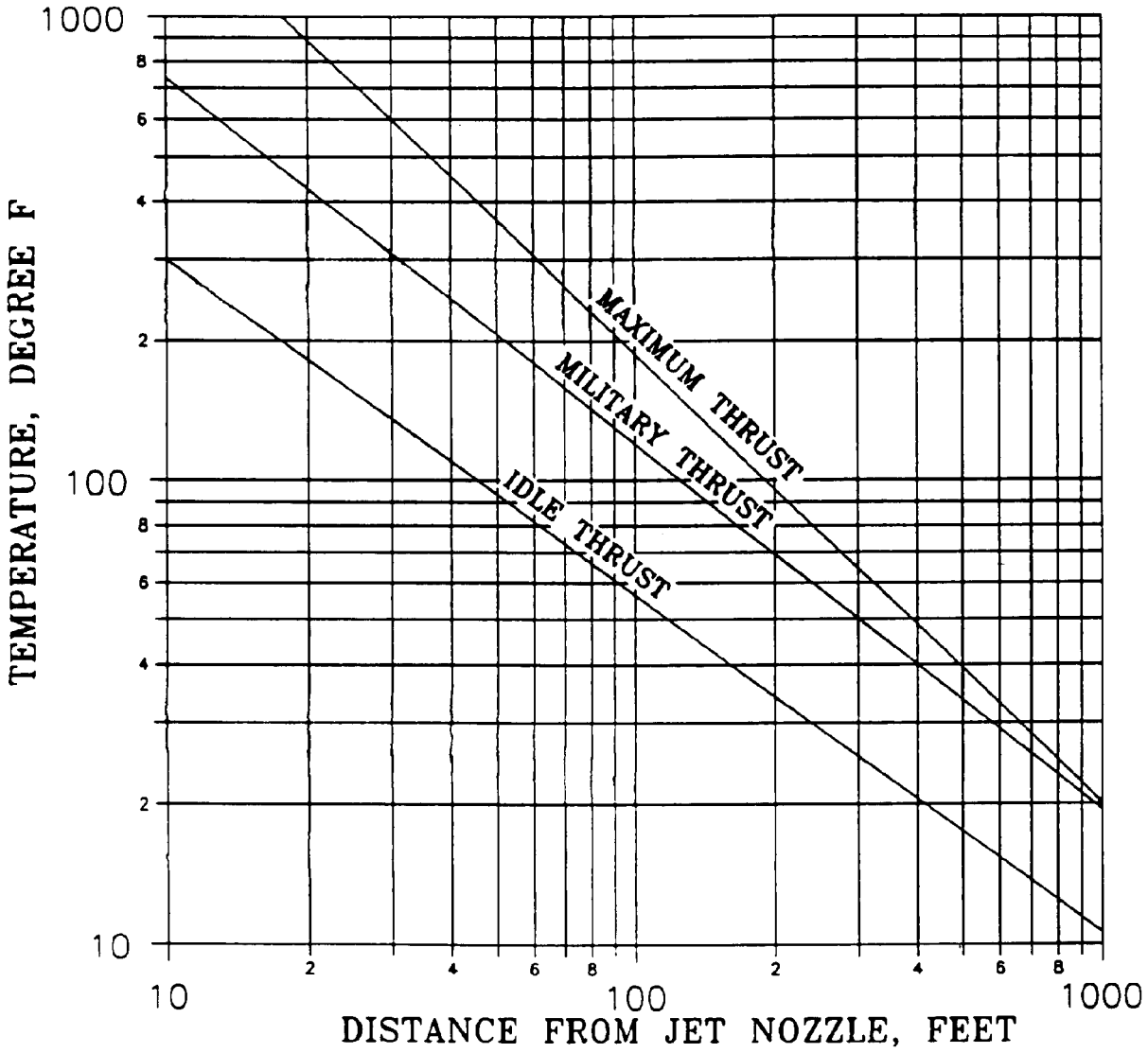

Figure E-111. F-5E/F, Temperature - Distance Curves

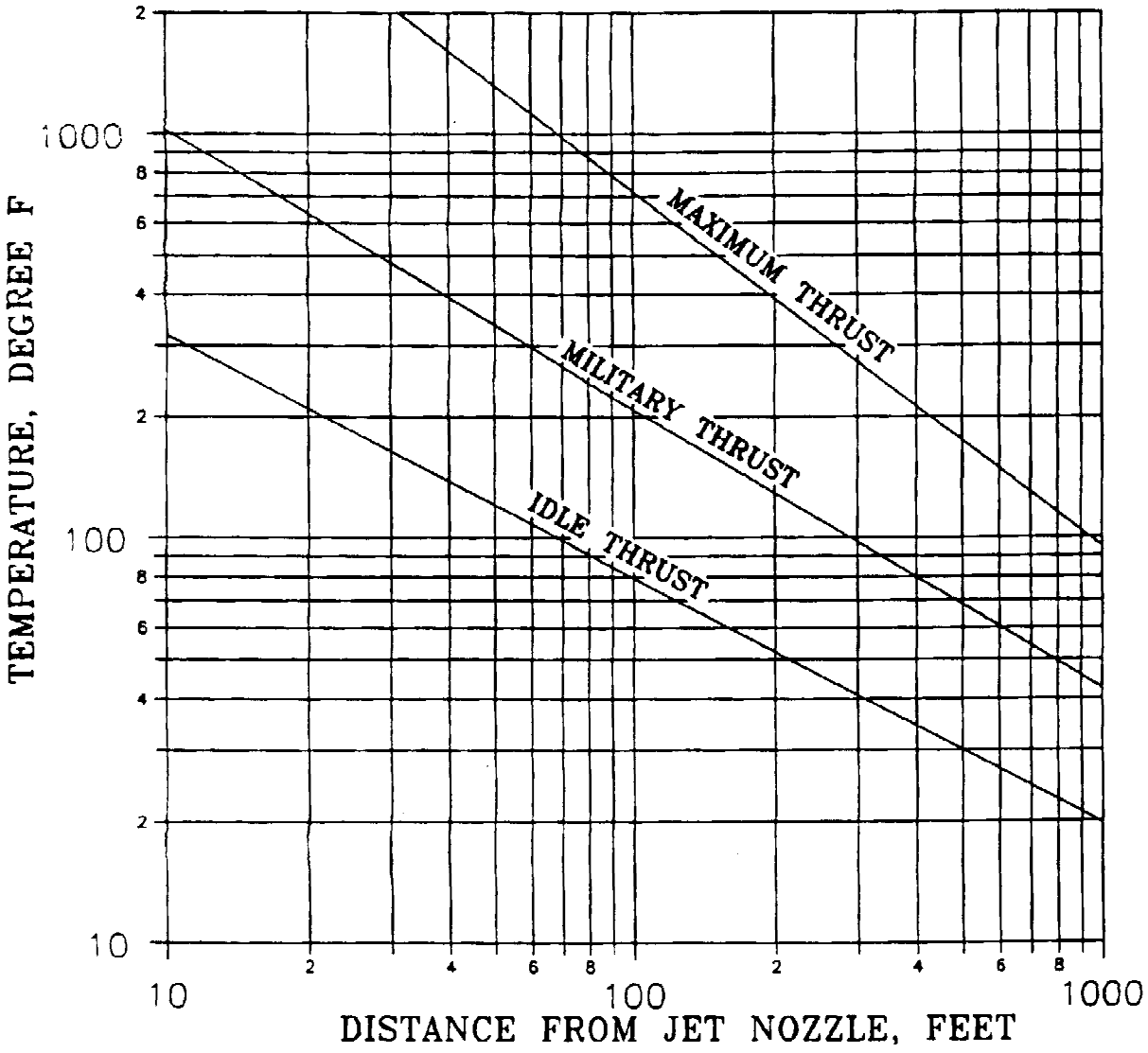

Figure E-112. F-15A/B/C/D/E, Temperature - Distance Curves

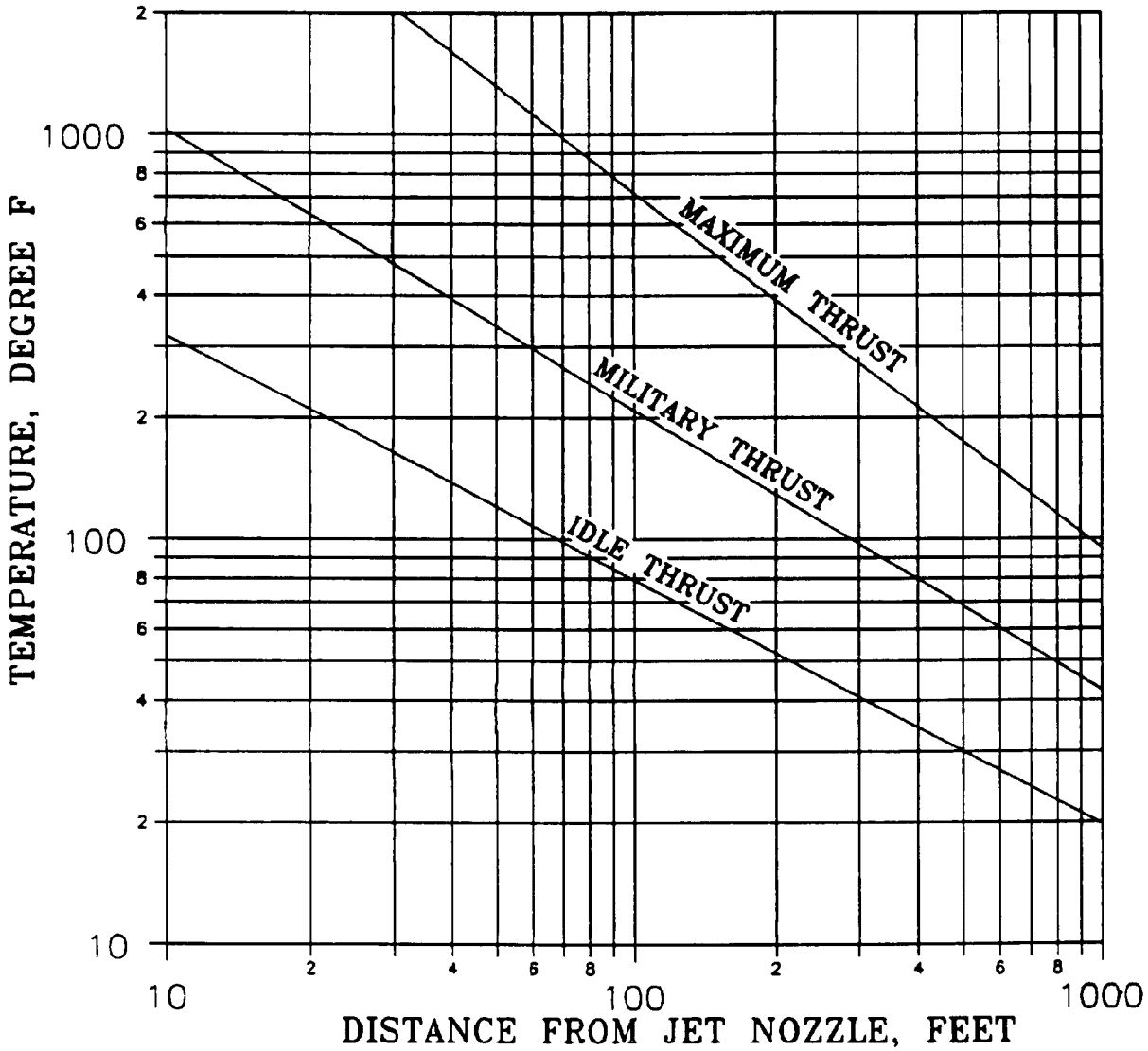

Figure E-113. F-16A/B, Temperature - Distance Curves

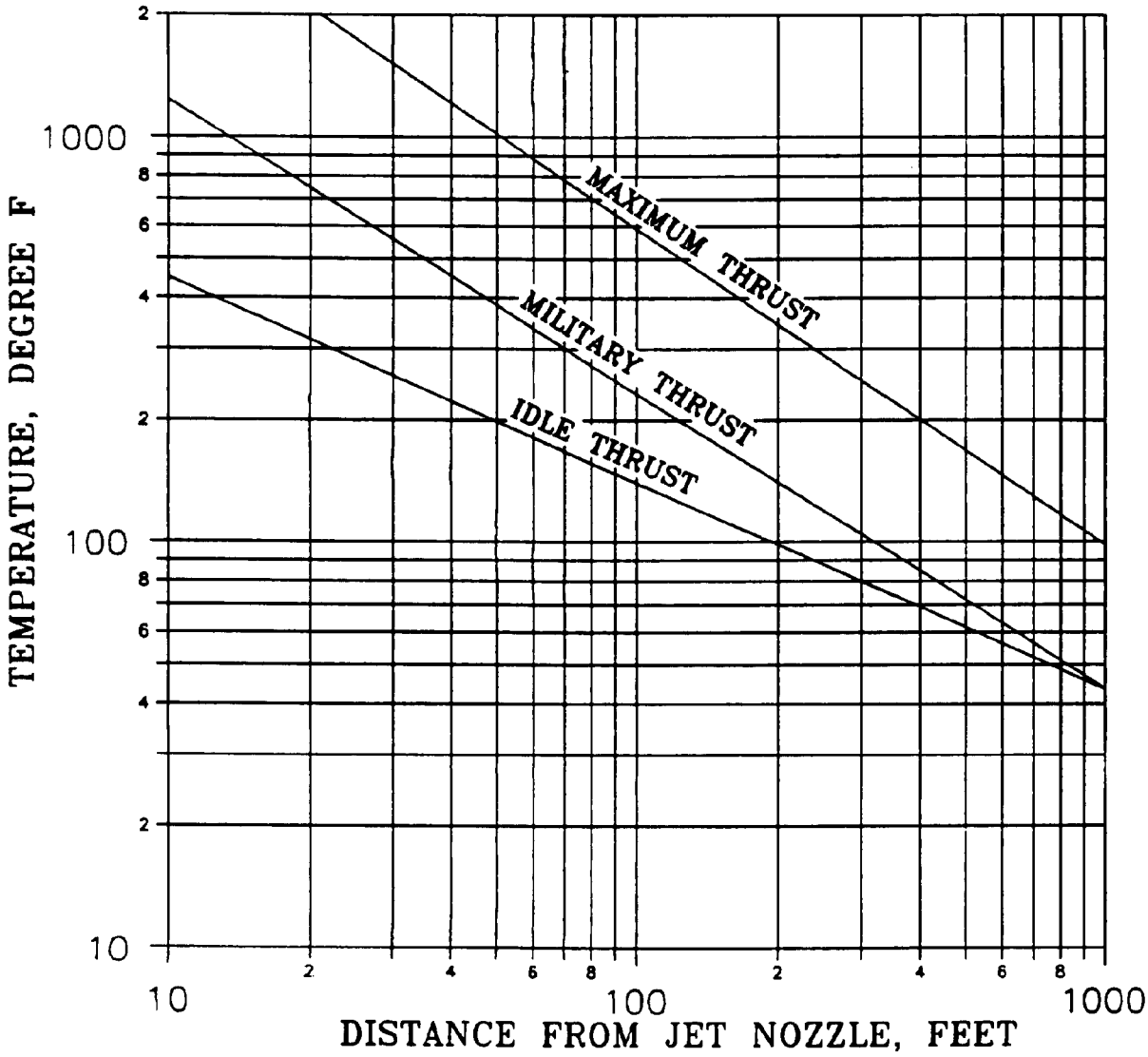

Figure E-114. F-16C/D, Temperature - Distance Curves

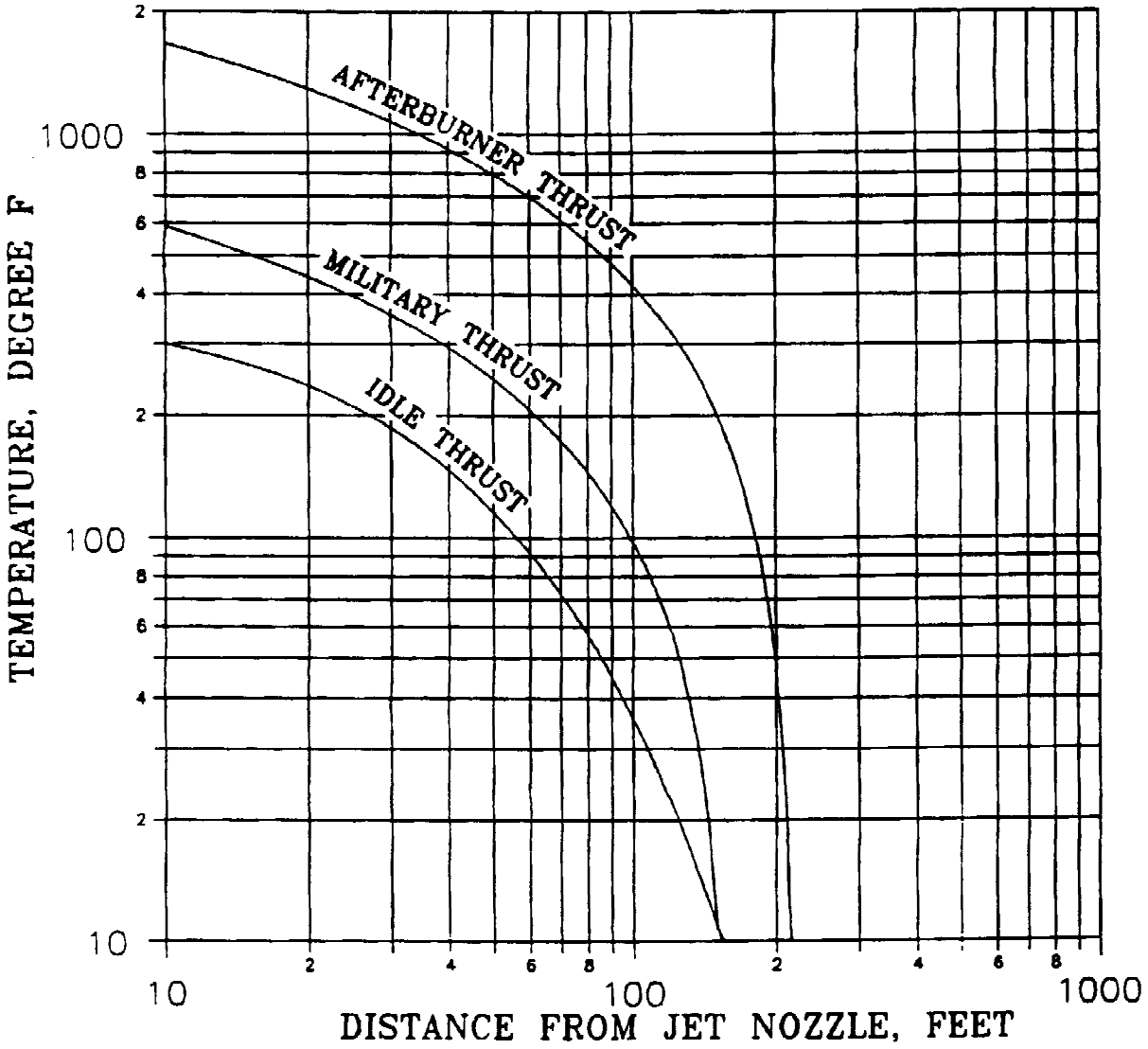

Figure E-115. F-100, Temperature - Distance Curves

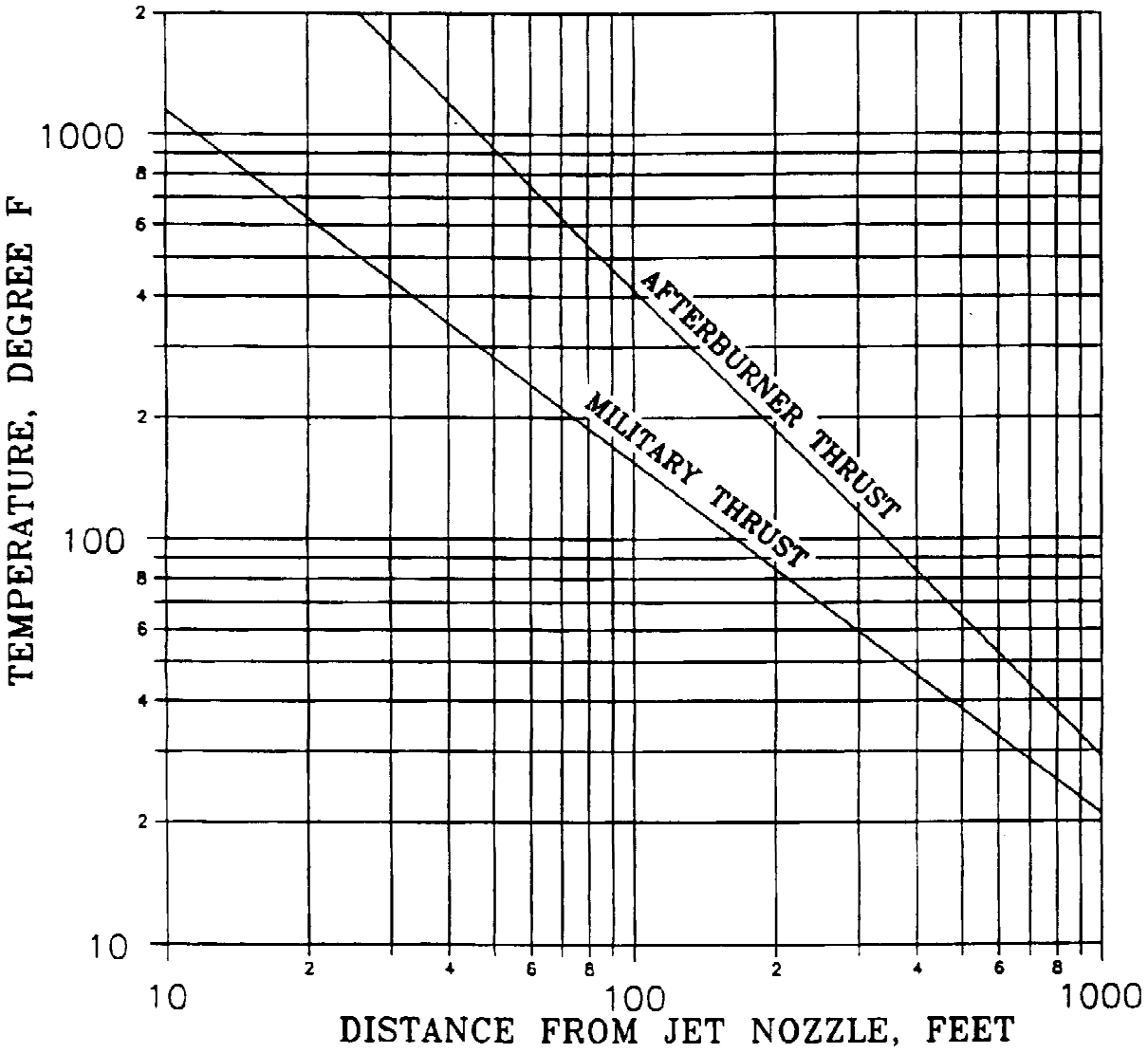

Figure E-116. F-101B, Temperature - Distance Curves

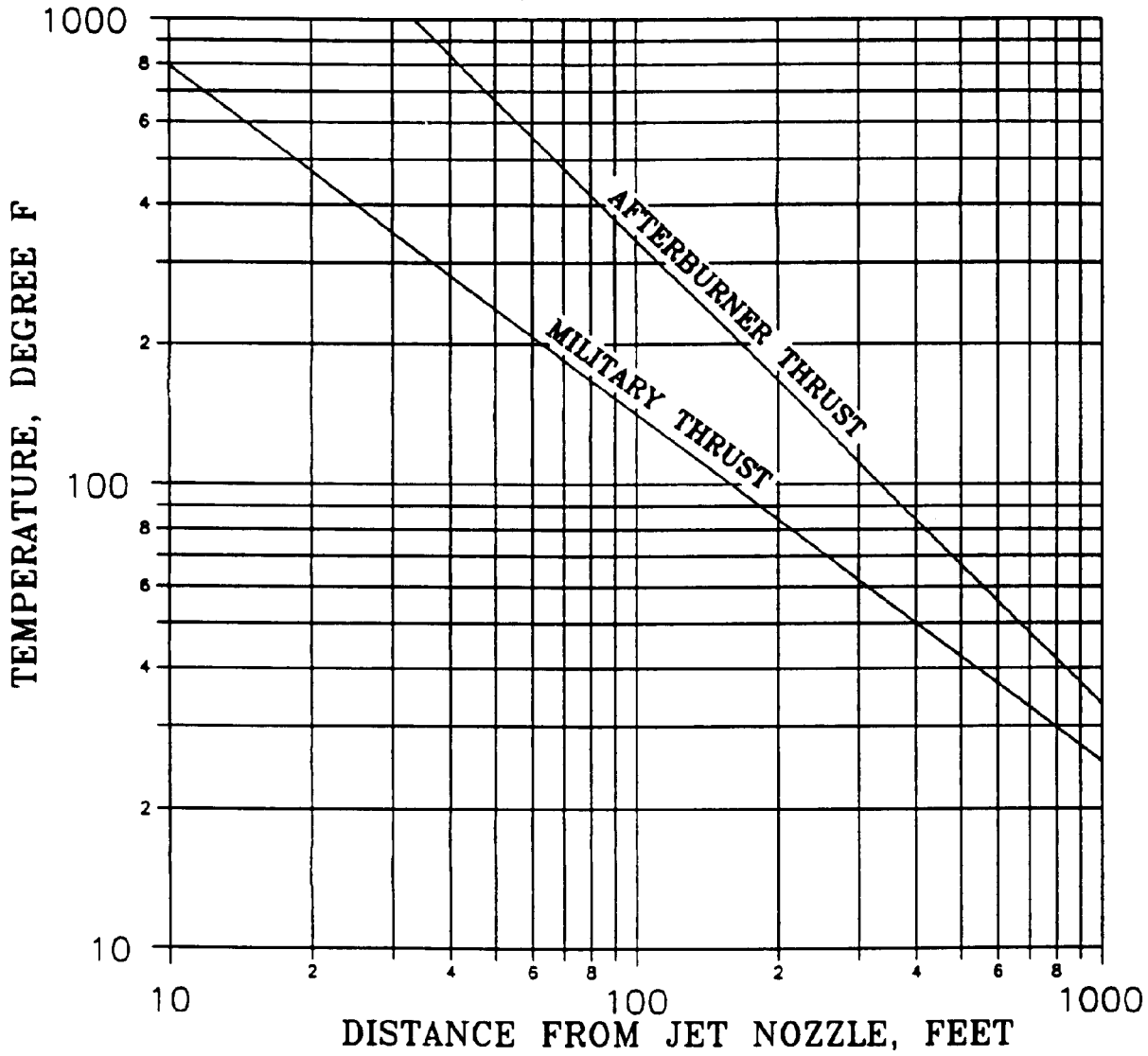

Figure E- 117. F-104G, Temperature - Distance Curves

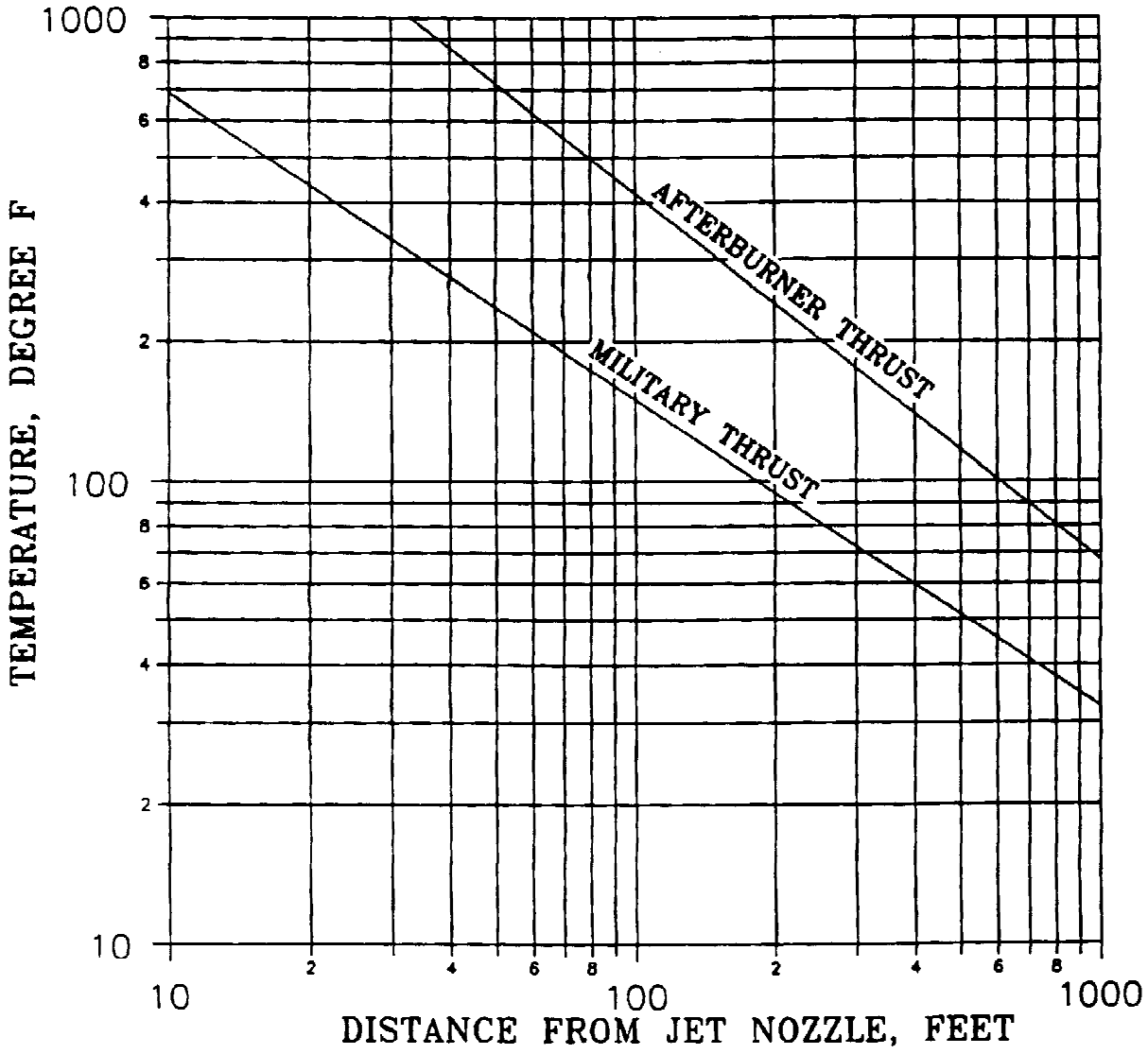

Figure E-118. F-105D/F/G, Temperature - Distance Curves