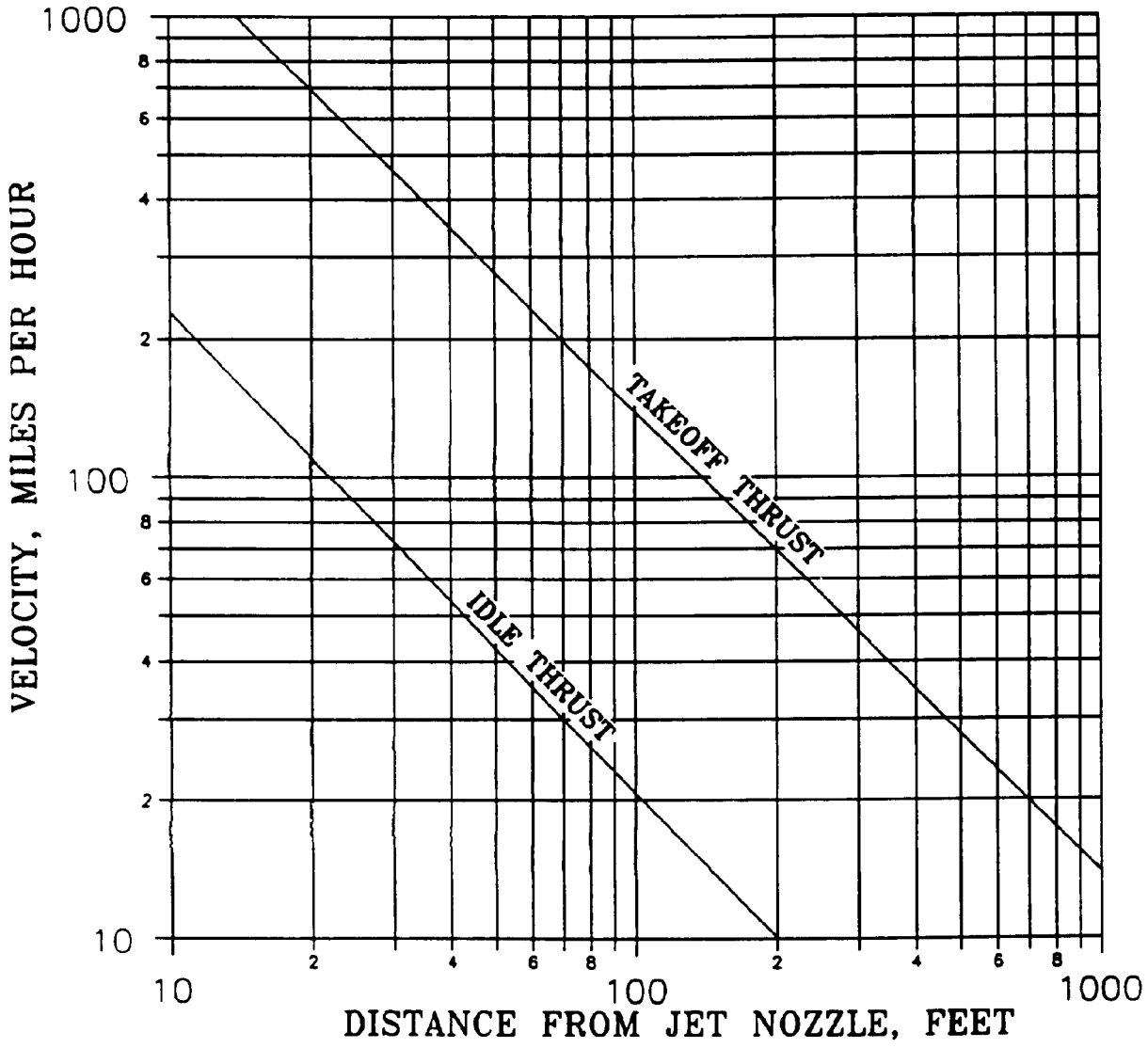


Figure E-19. EC-18B, Velocity - Distance Curves

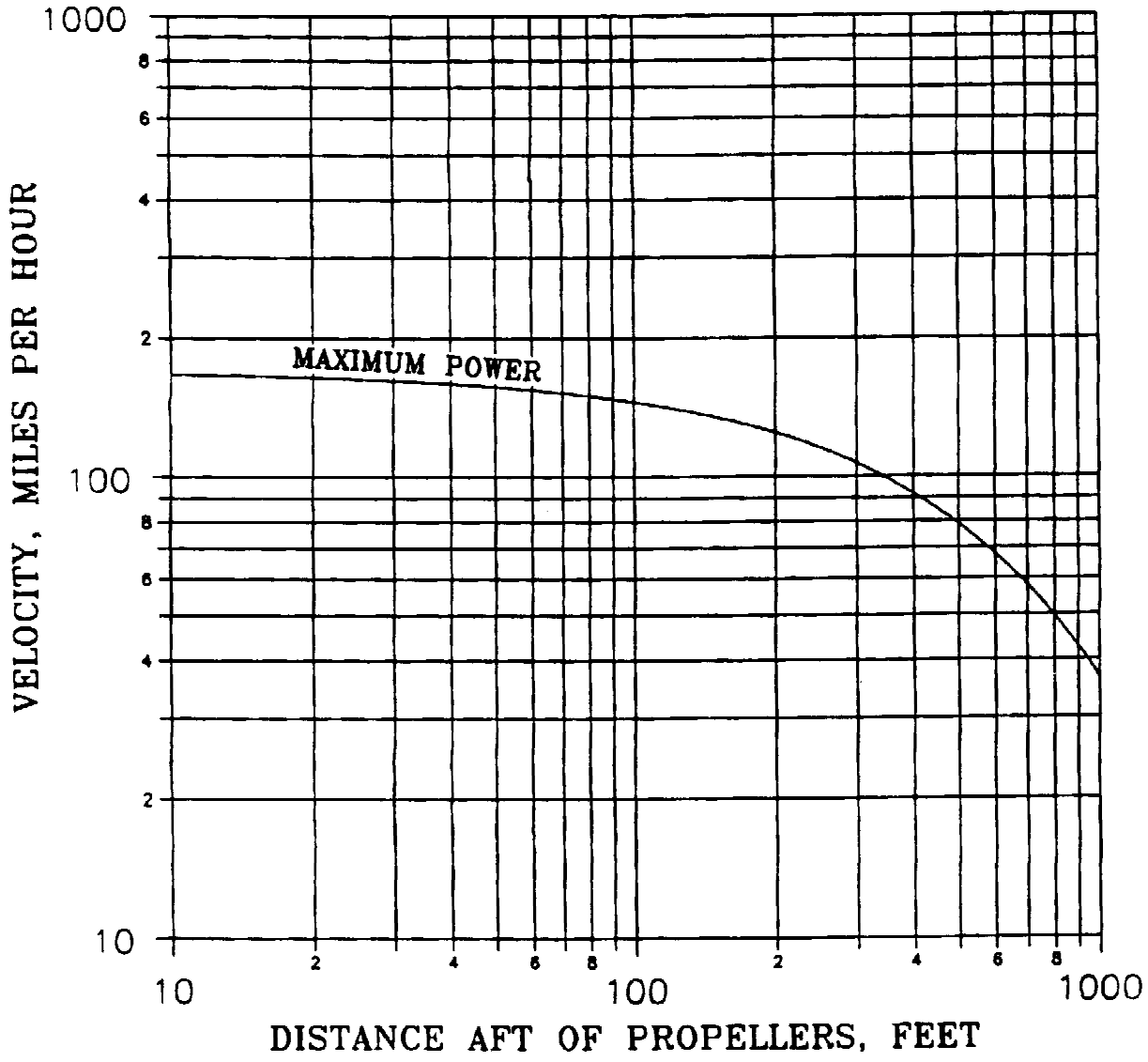


Figure E-20. EC-130E/H, MC-130E/H, and WC-130E/H,
Velocity - Distance Curve

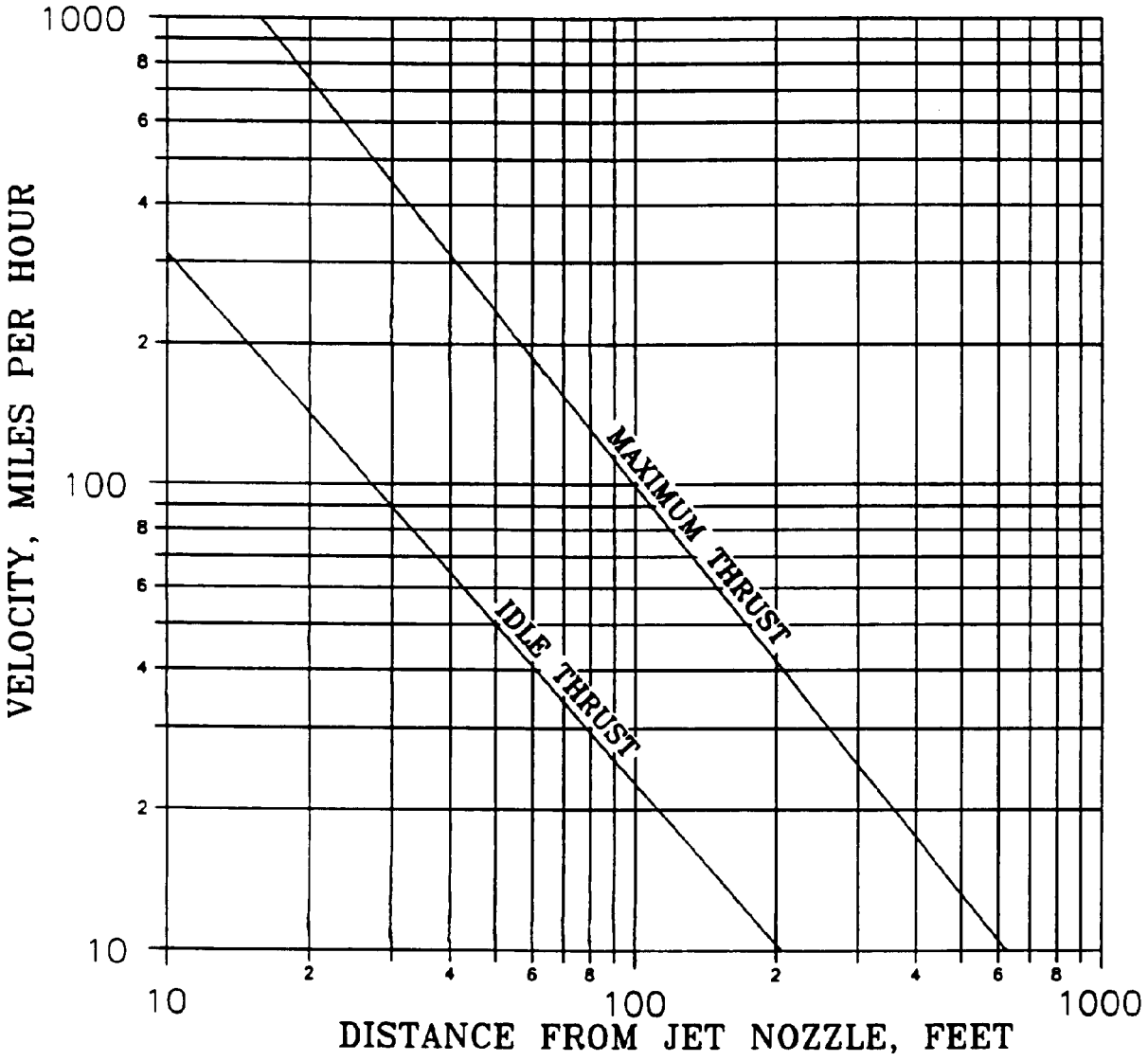


Figure E-21. EC-135A/G/L, Velocity - Distance Curves

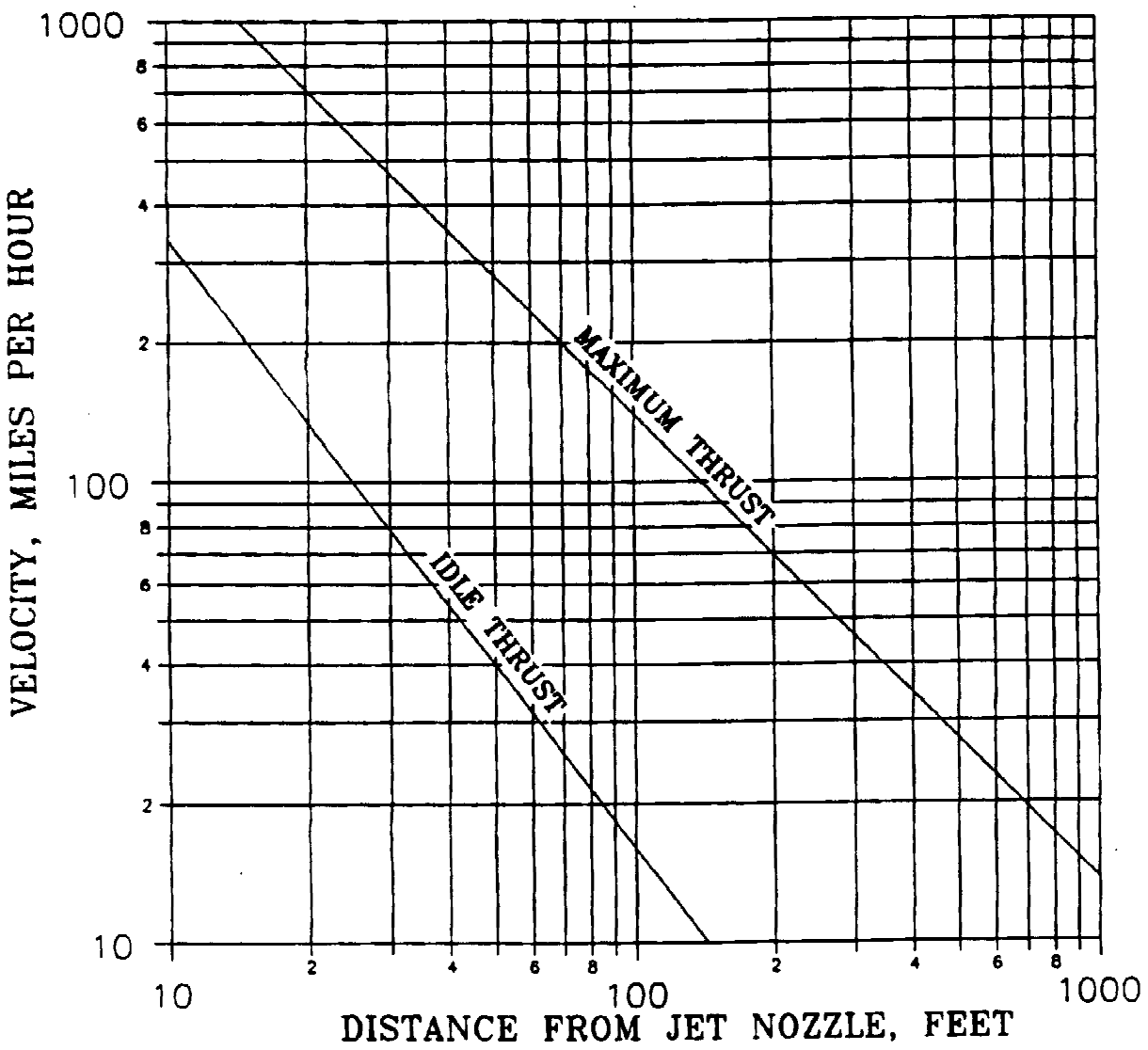


Figure E-22. EC-135C/E/H/J/K/P/Y, RC-135S/U/V/W, and WC-135B, Velocity - Distance Curves

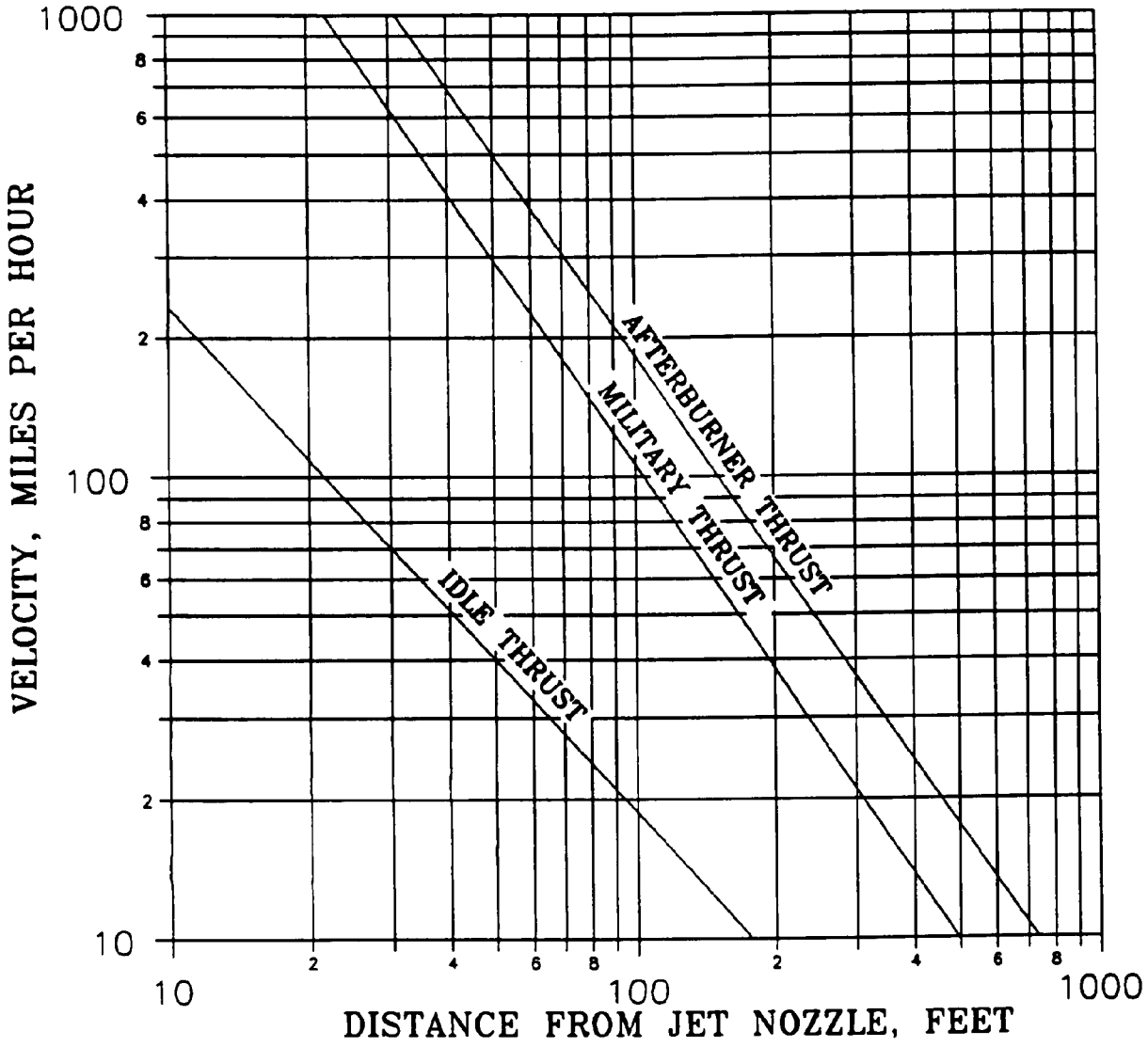


Figure E-23. EF-111A, Velocity - Distance Curves

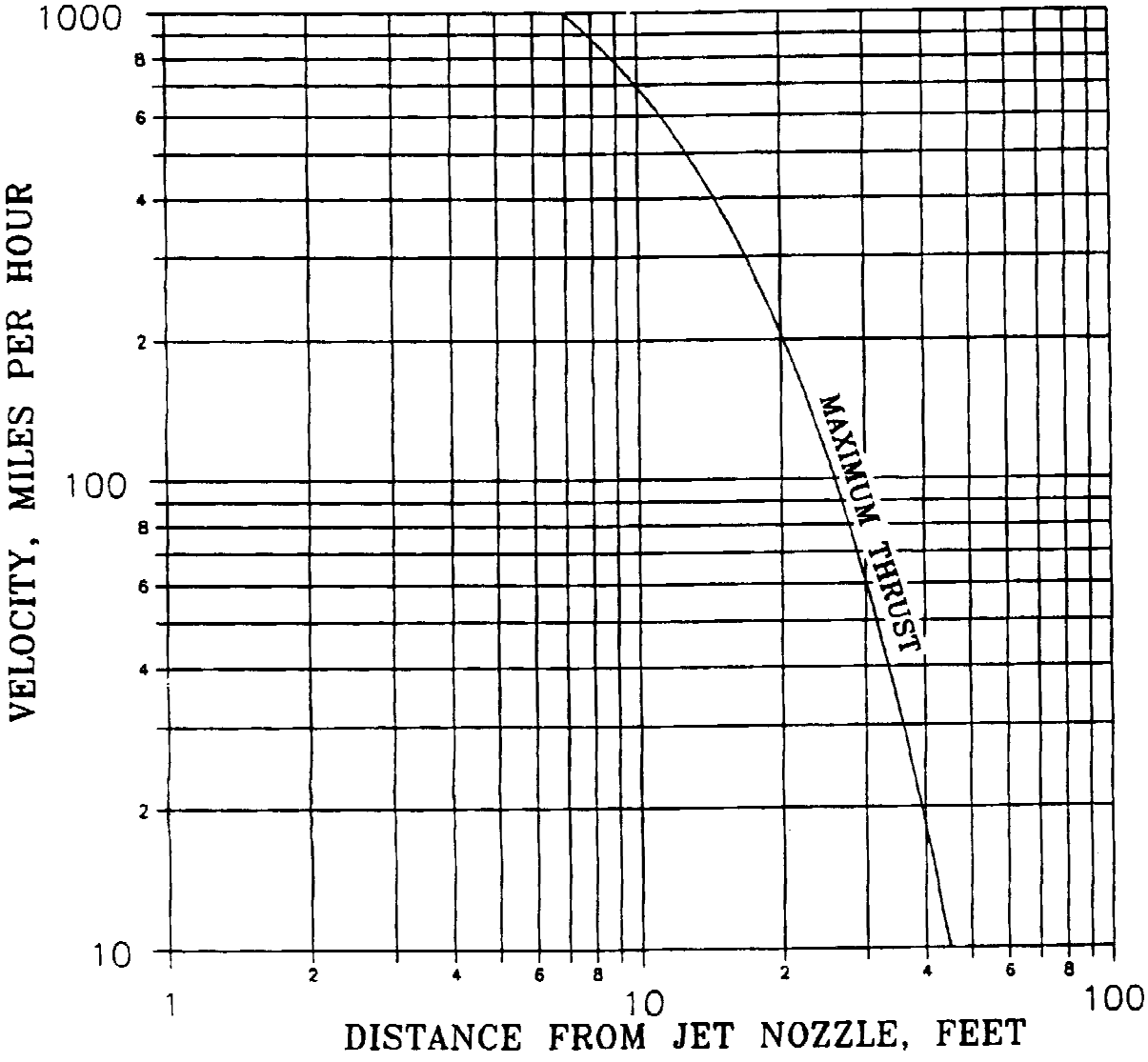


Figure E-24. OA-37B, Velocity - Distance Curve

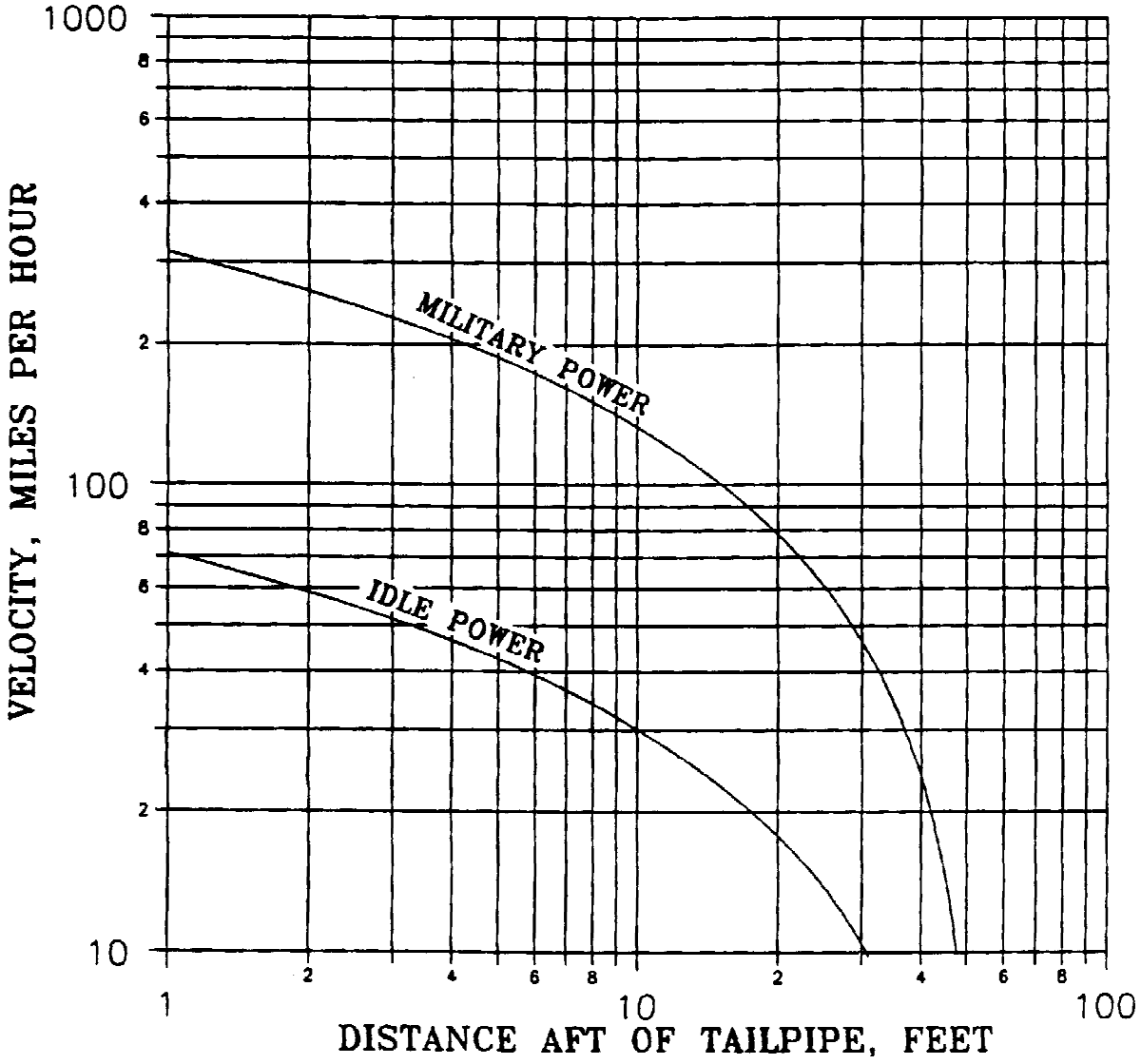


Figure E-25. OV-1B/C/D, Velocity - Distance Curves

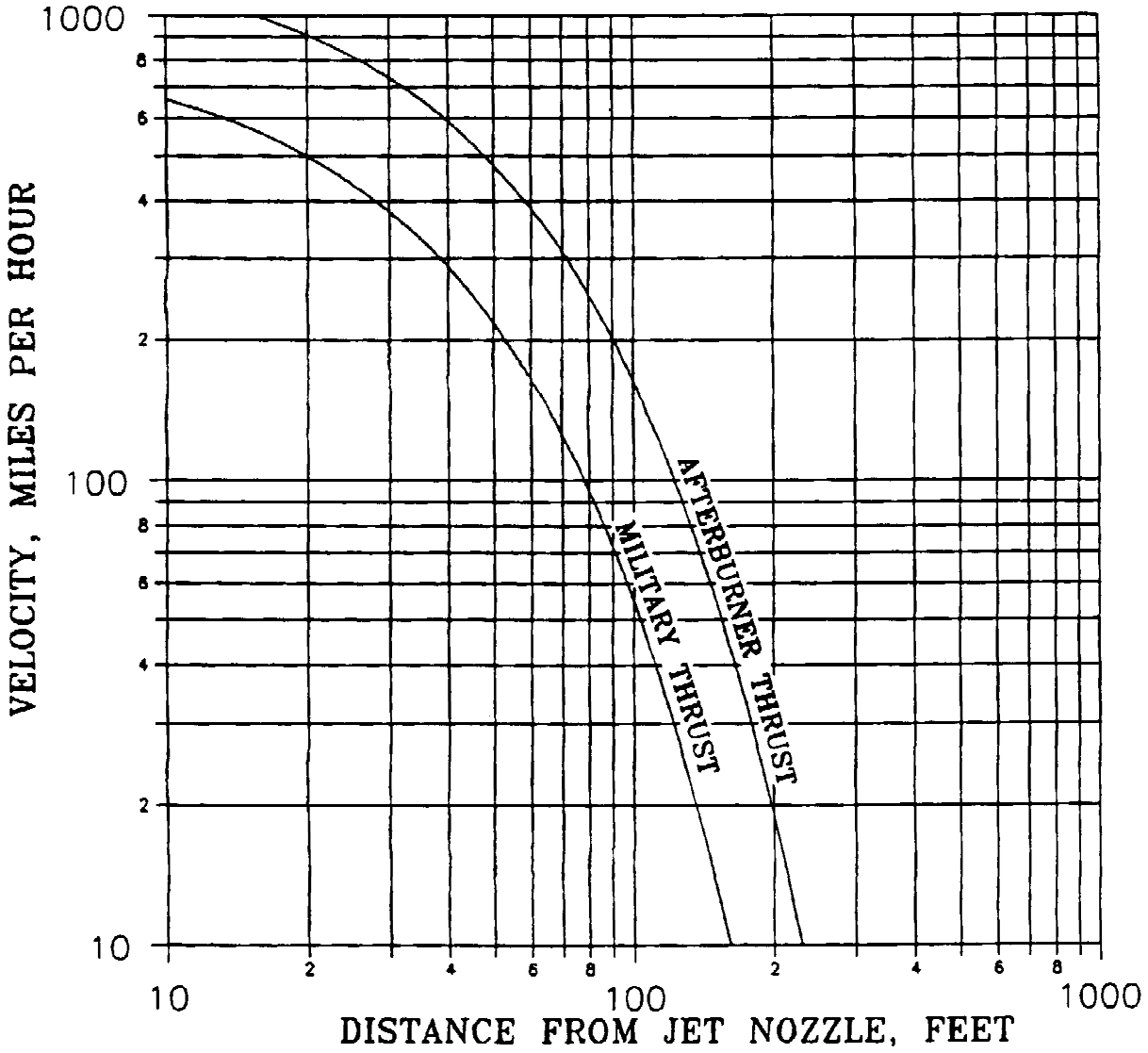


Figure E-26. RF-4C, Velocity - Distance Curves

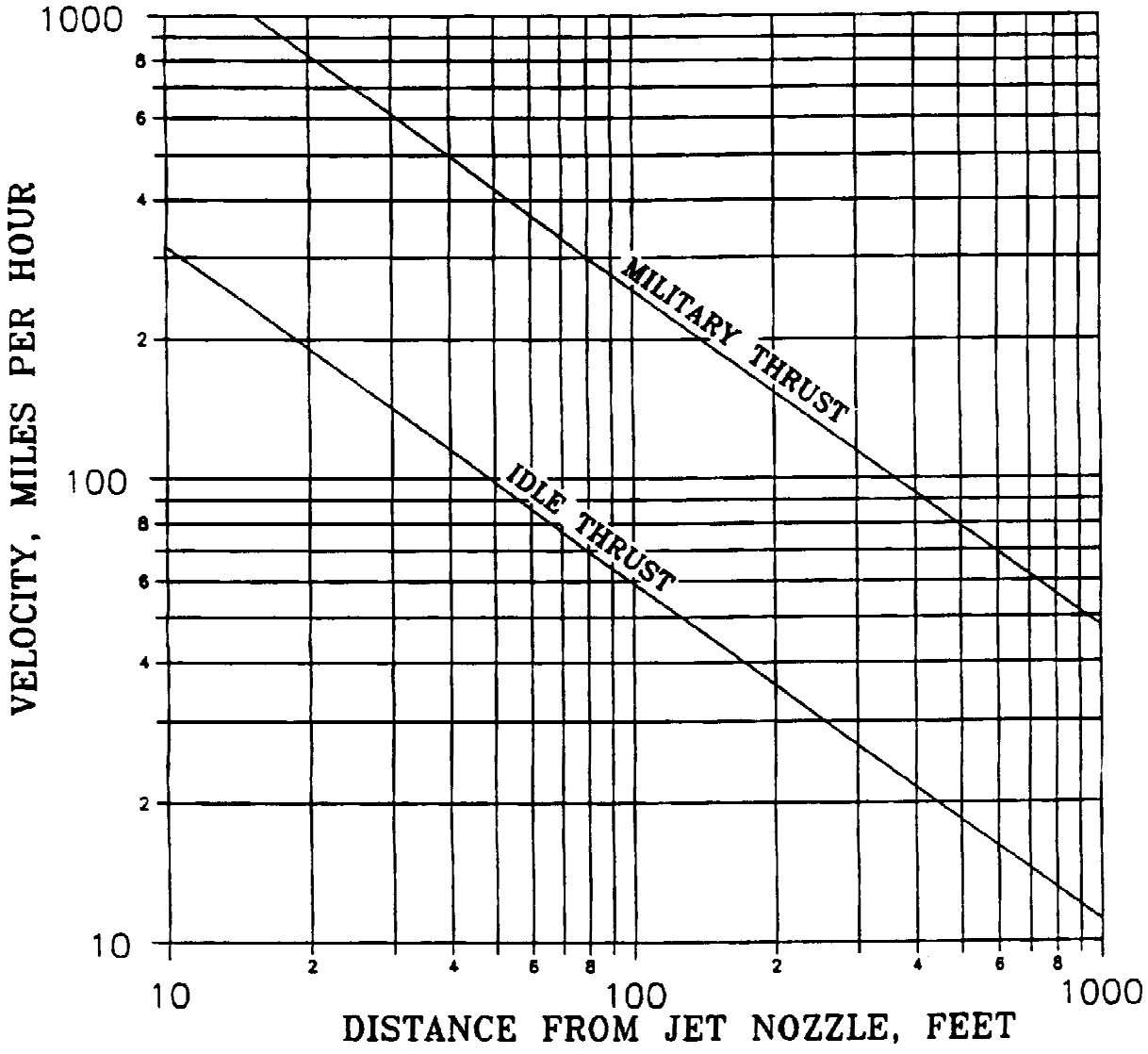


Figure E-27. A-7D/K, Velocity - Distance Curves

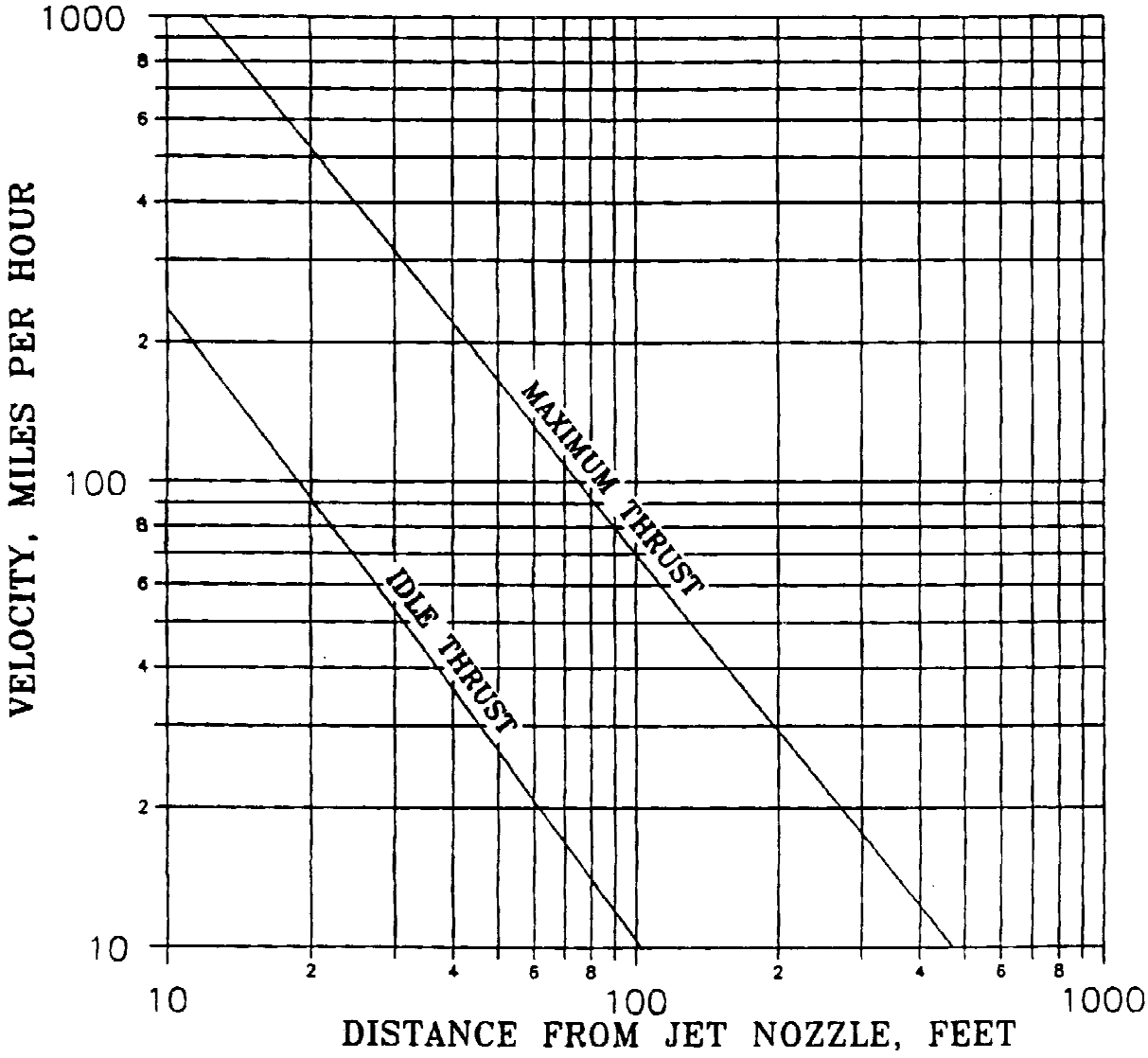


Figure E-28. A-10A, Velocity - Distance Curves

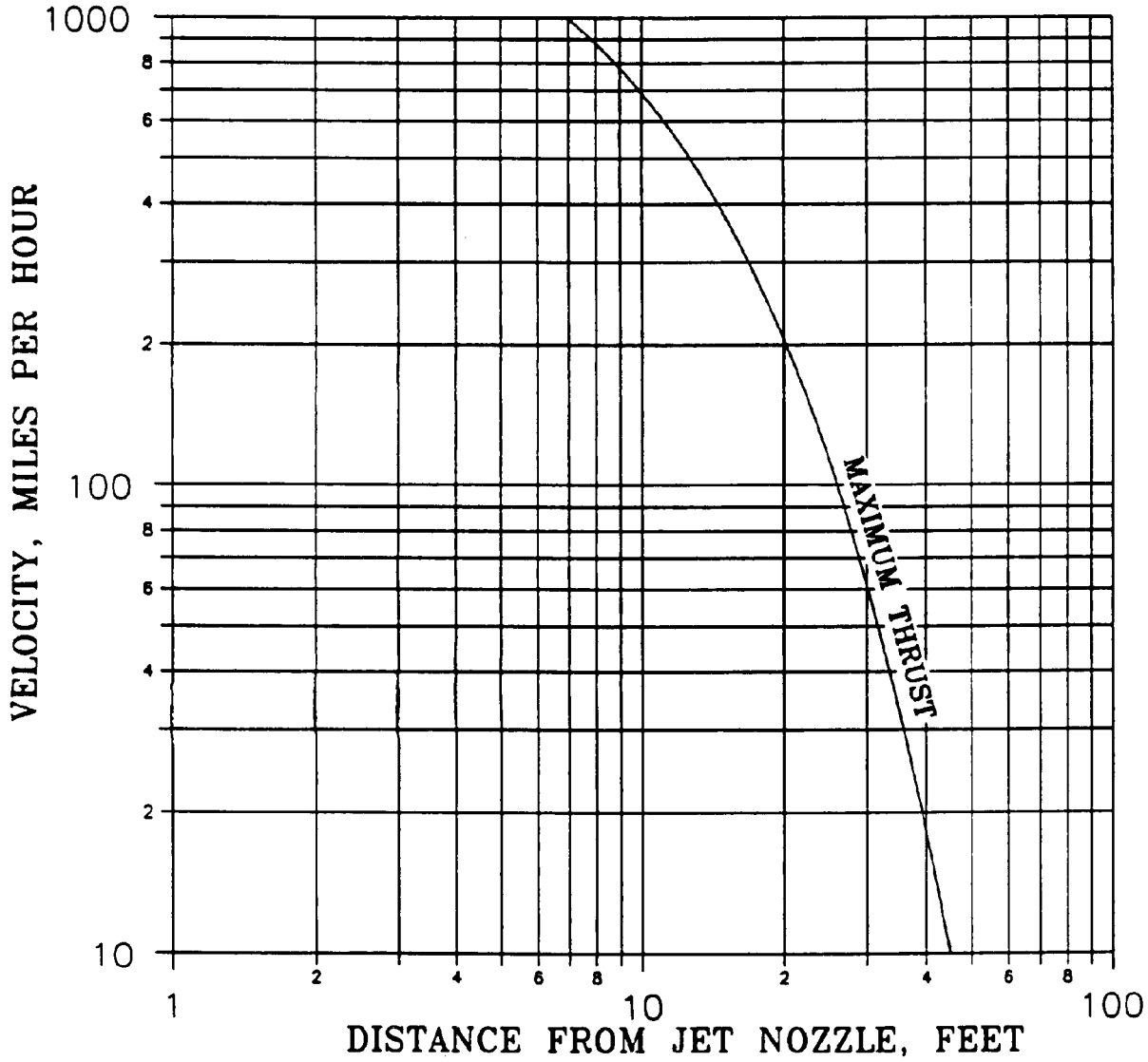


Figure E-29. A-37B, Velocity - Distance Curve

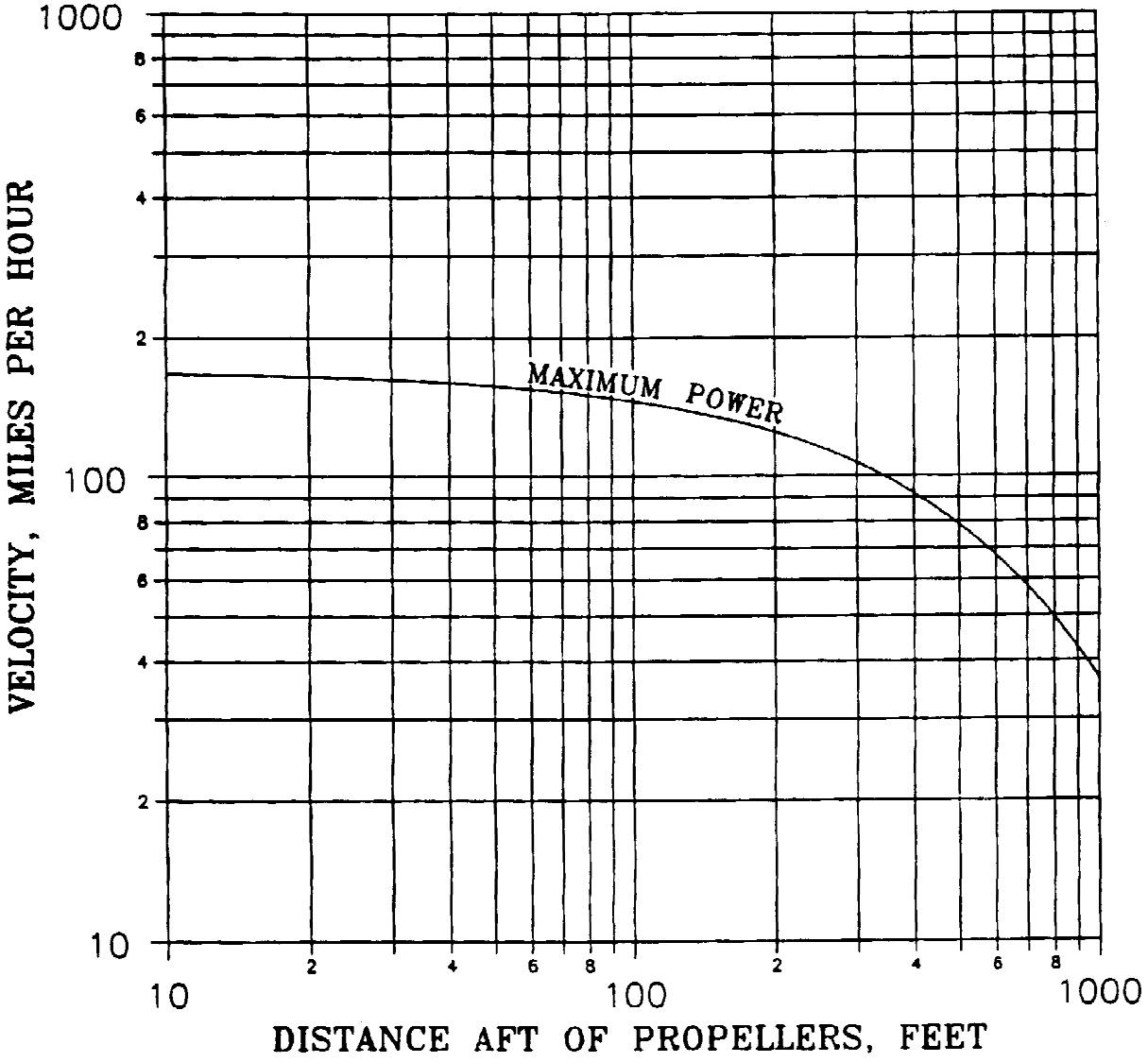


Figure E-30. AC-130A/H/U, Velocity - Distance Curve

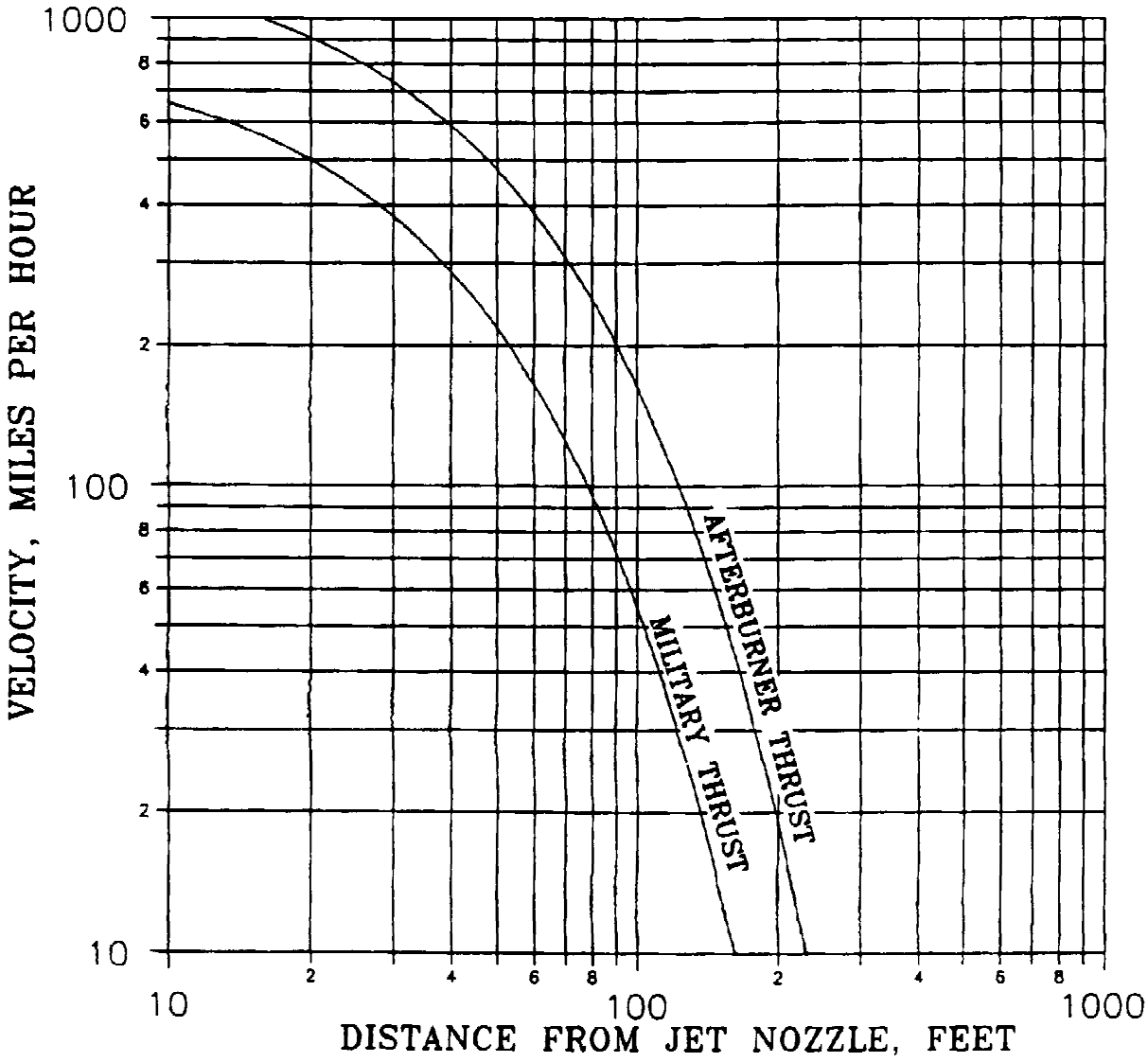


Figure E-31. F-4C/D/E, Velocity - Distance Curves

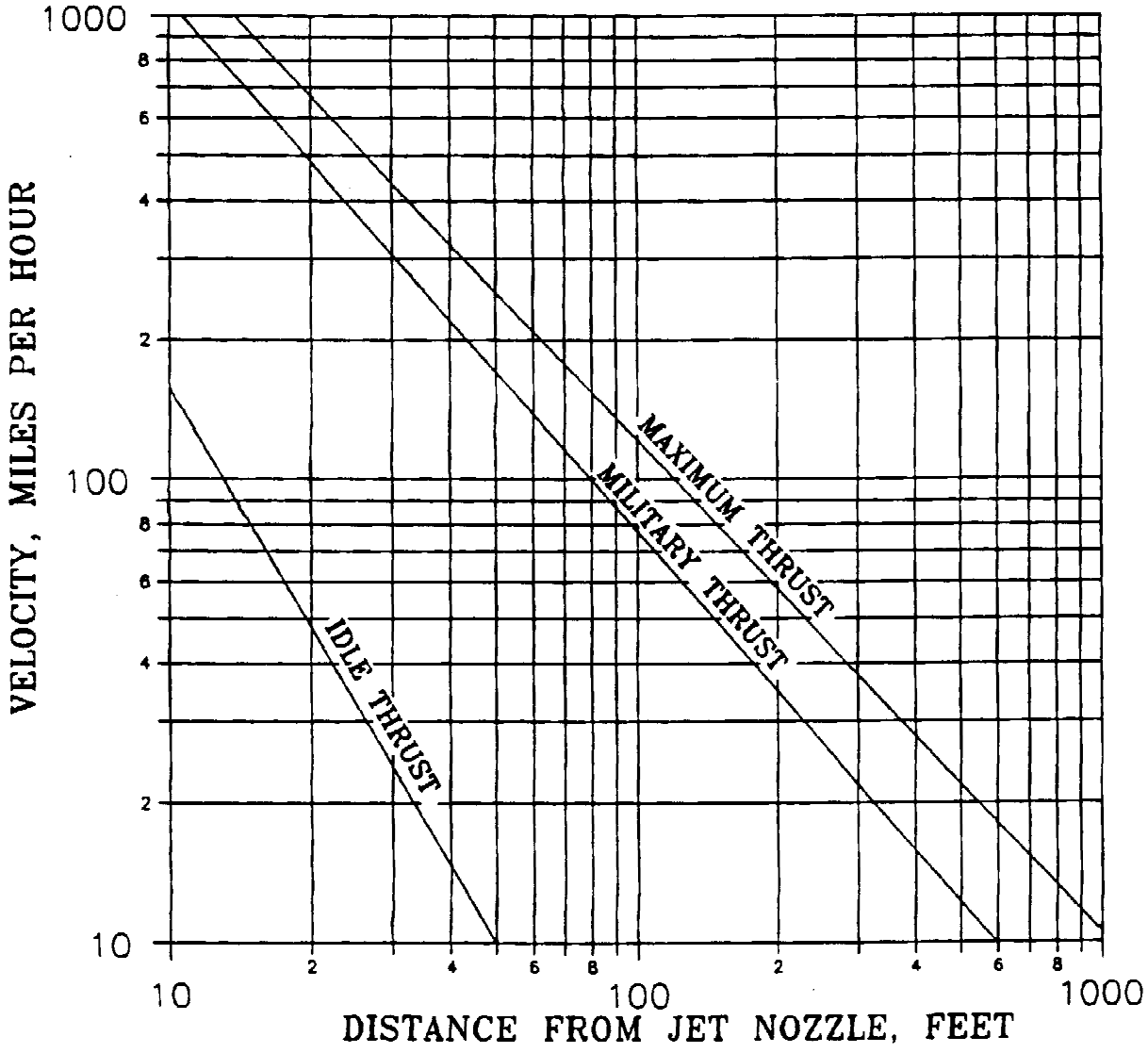


Figure E-32. F-5E/F, Velocity - Distance Curves

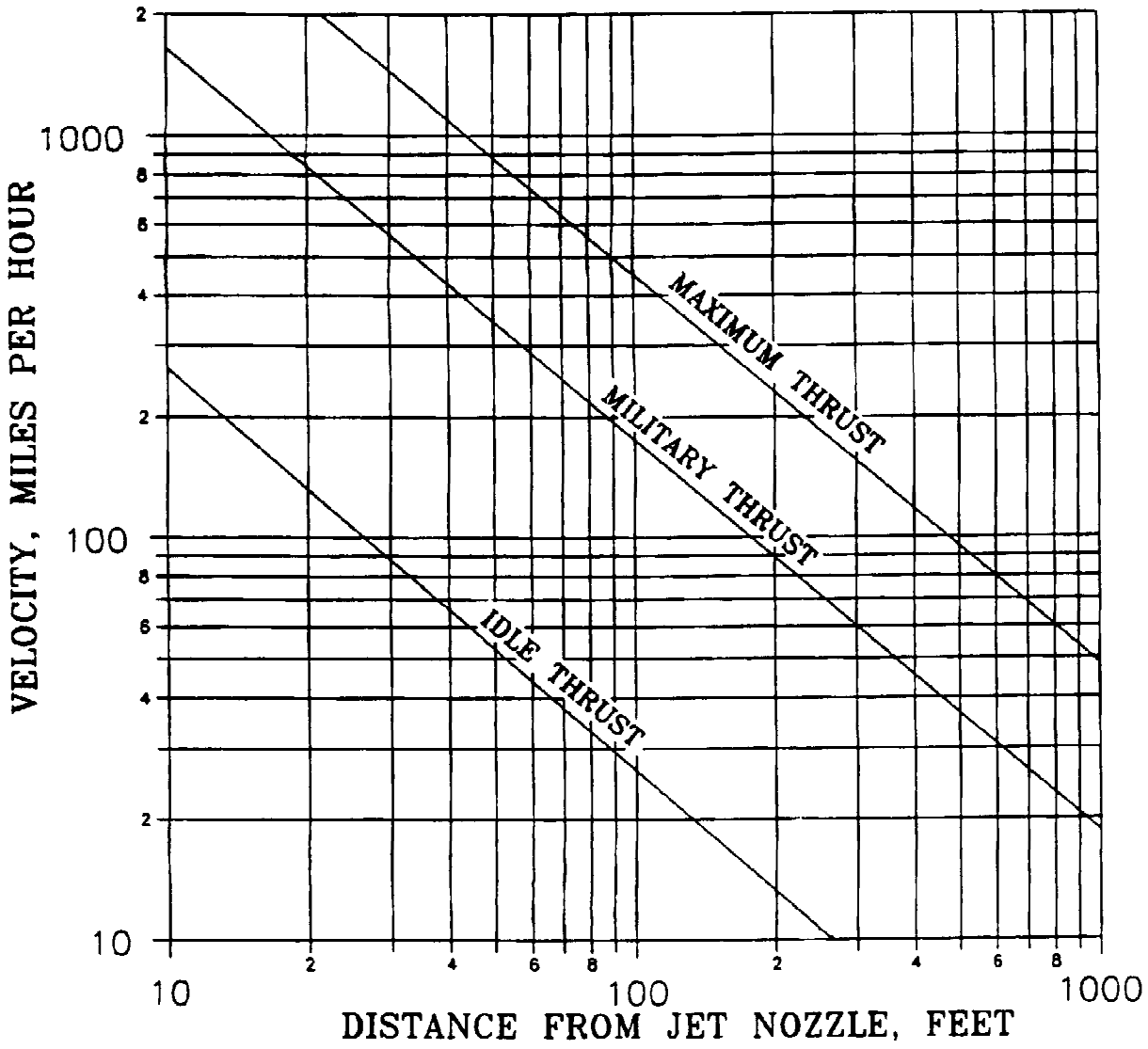


Figure E-33. F-15A/B/C/D/E, Velocity - Distance Curves

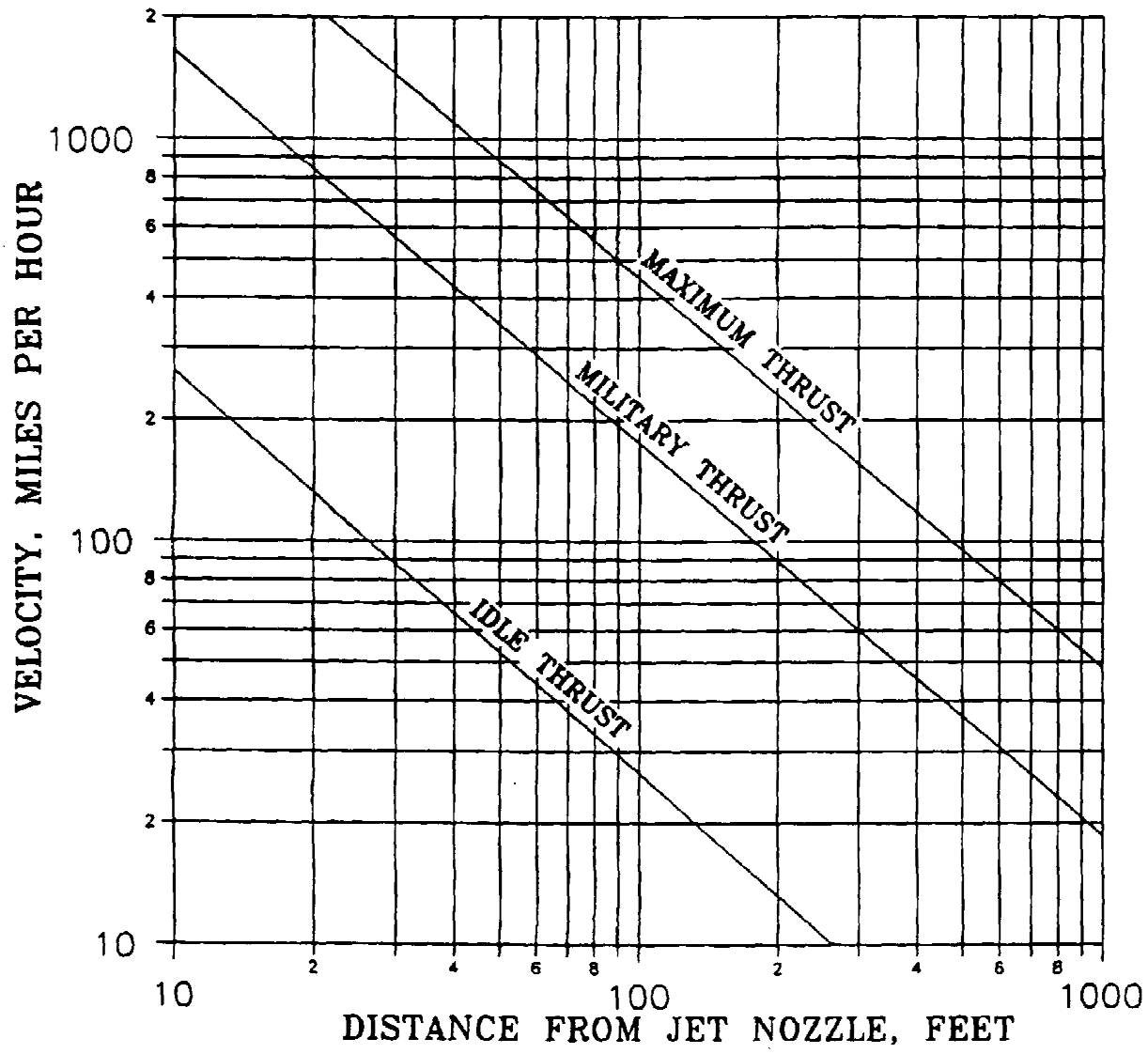


Figure E-34. F-16A/B, Velocity - Distance Curves

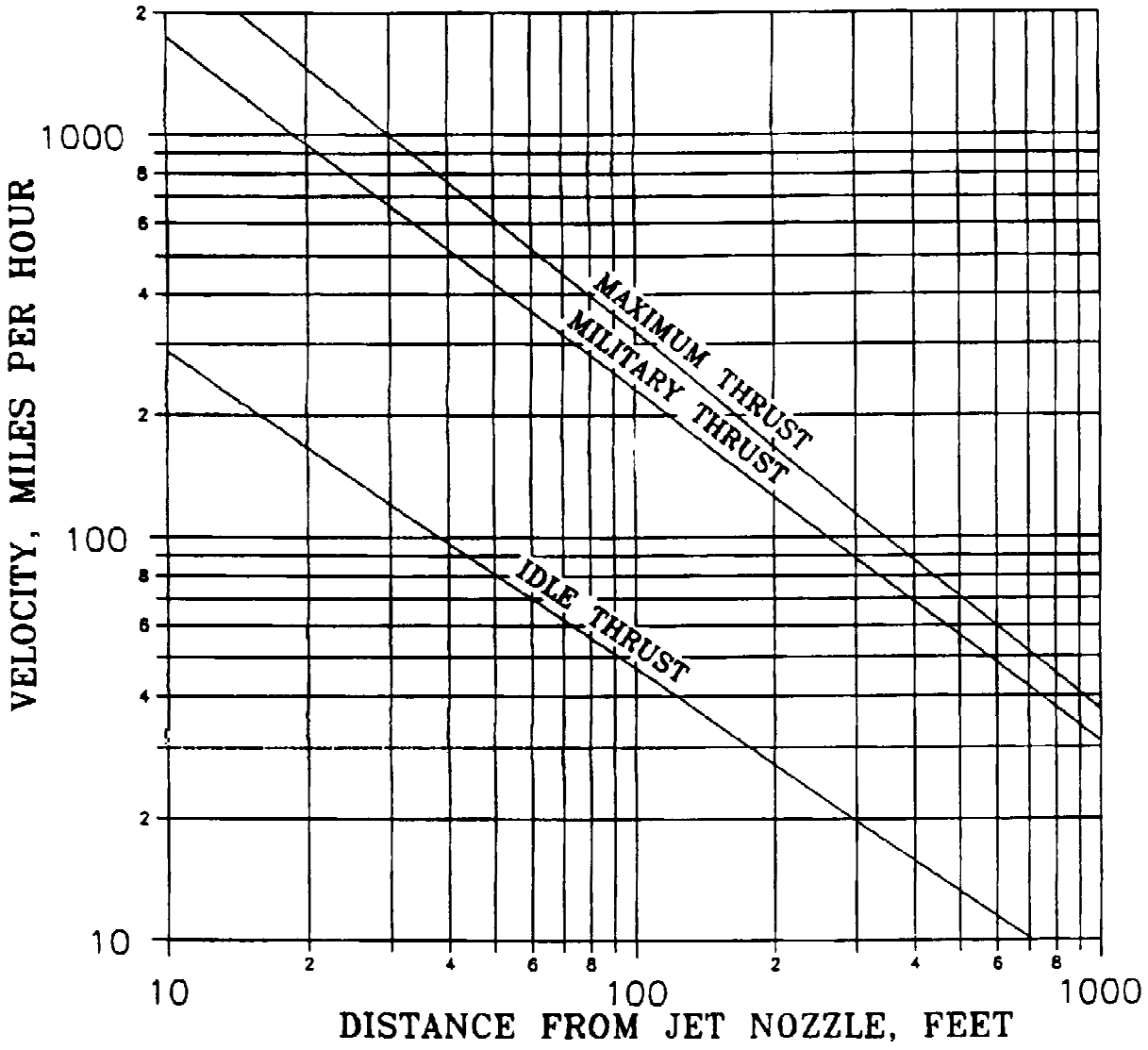


Figure E-35. F-16C/D, Velocity - Distance Curves

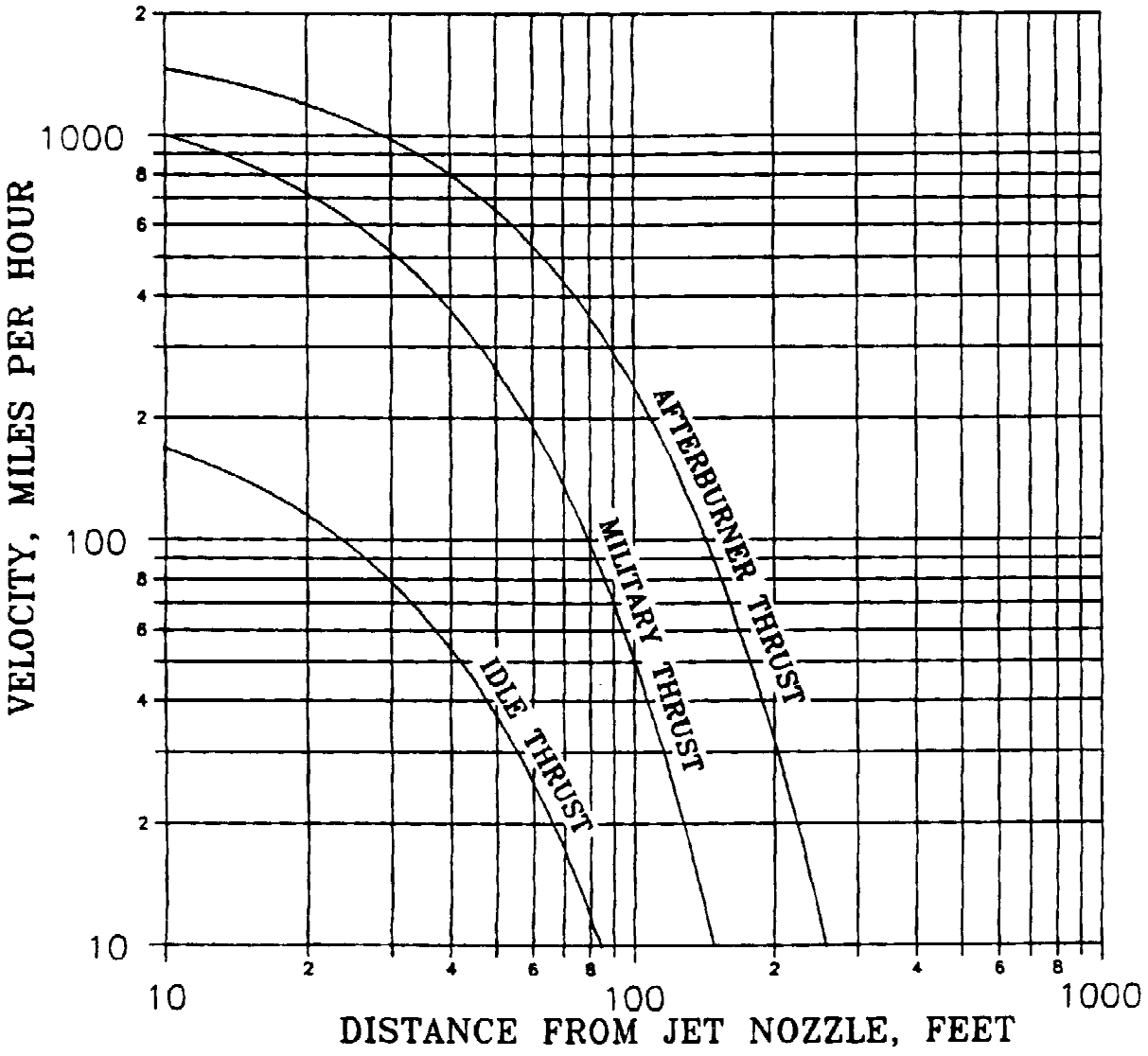


Figure E-36. F-100, Velocity - Distance Curves

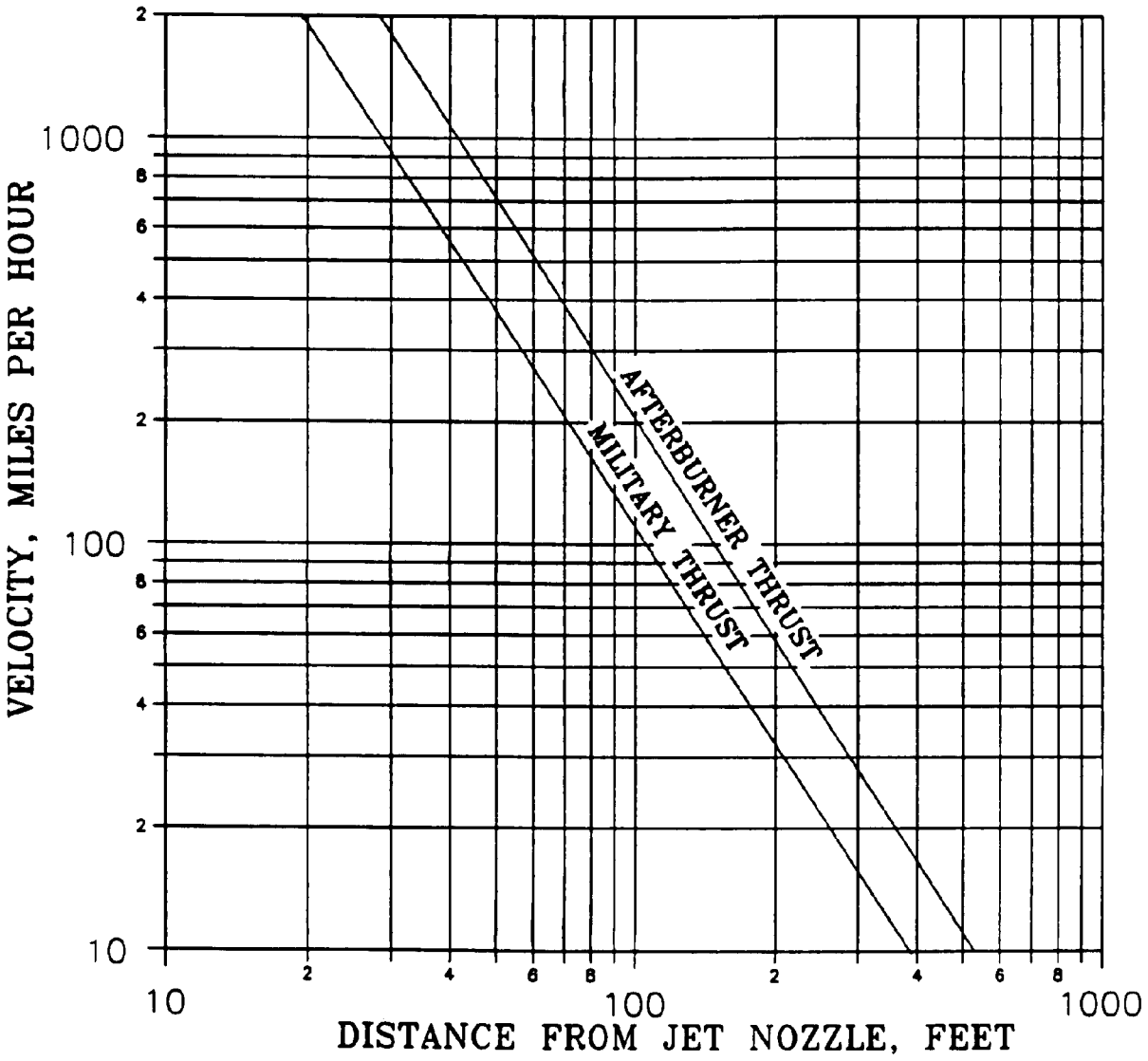


Figure E-37. F-101B, Velocity - Distance Curves

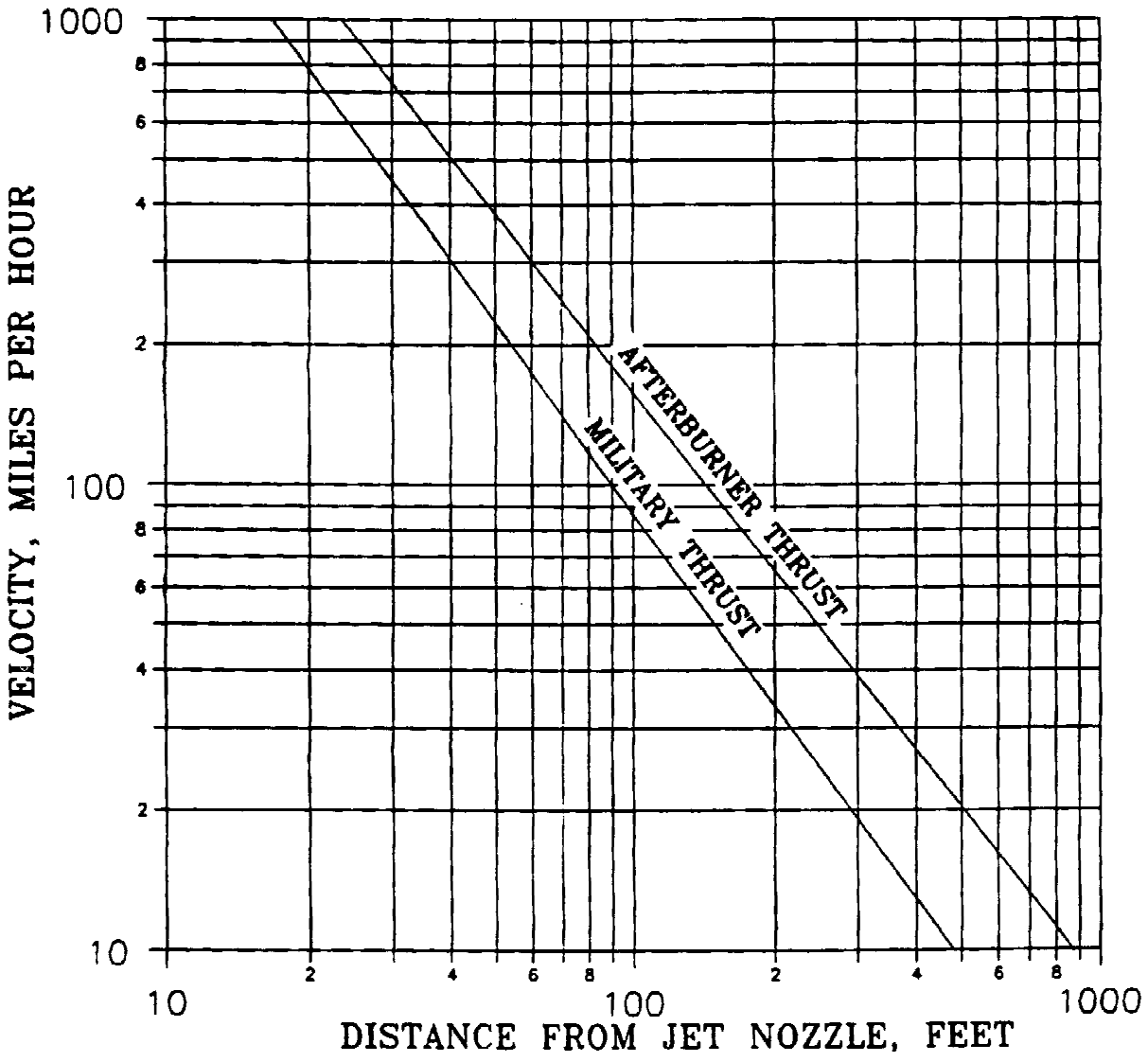


Figure E-38. F-104G, Velocity - Distance Curves

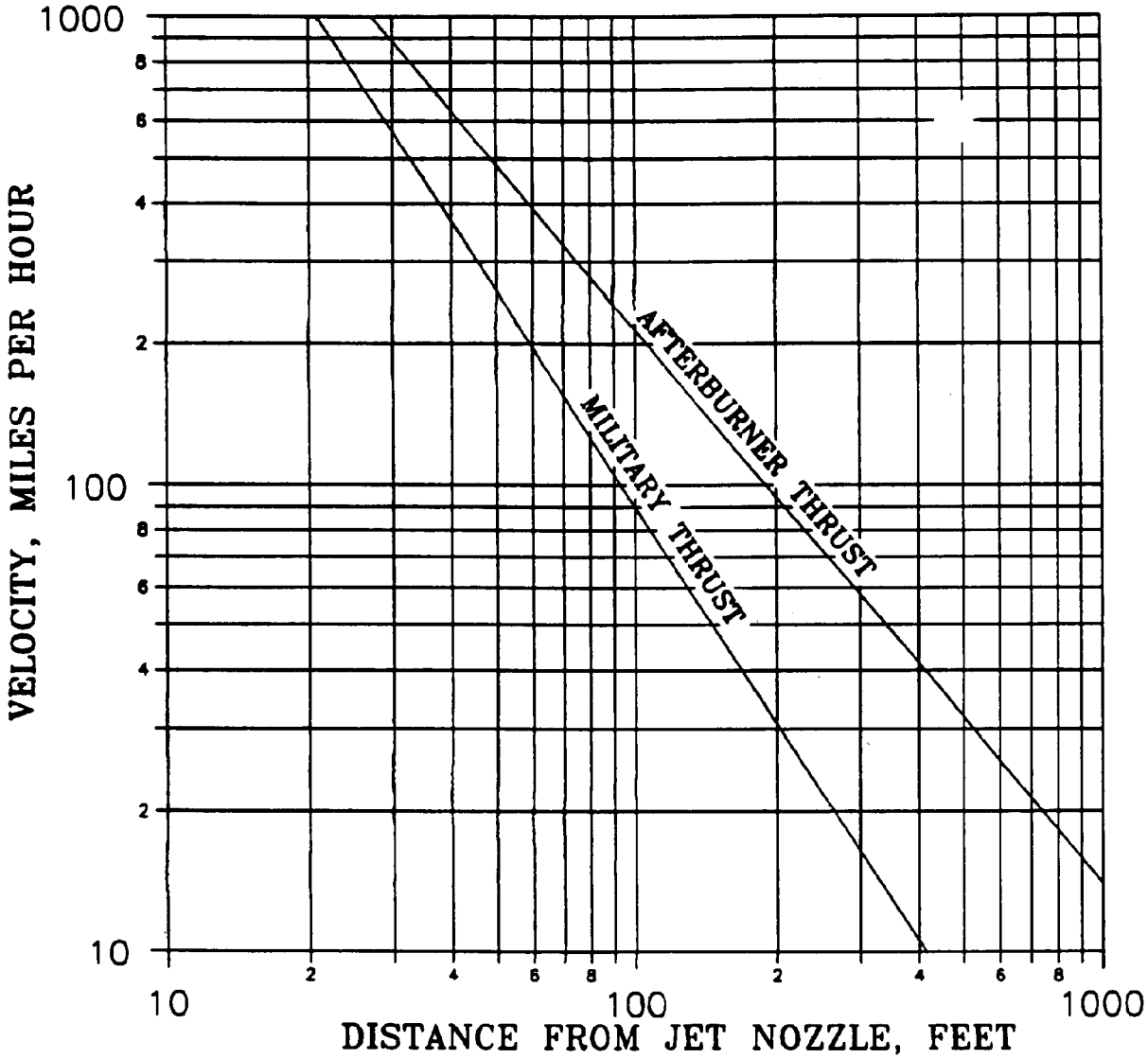


Figure E-39. F-105D/F/G, Velocity - Distance Curves

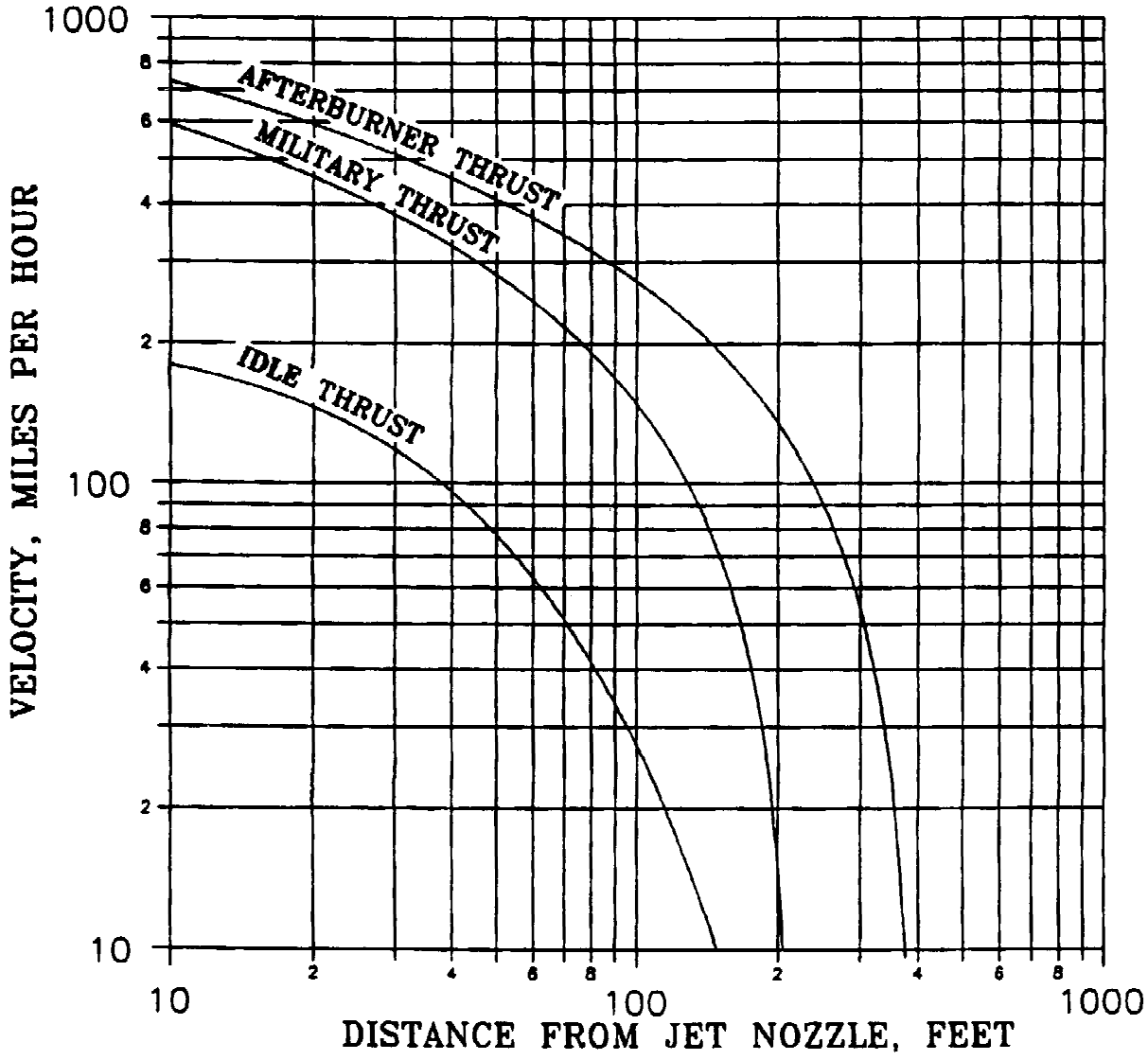


Figure E-40. F-106A/B, Velocity - Distance Curves

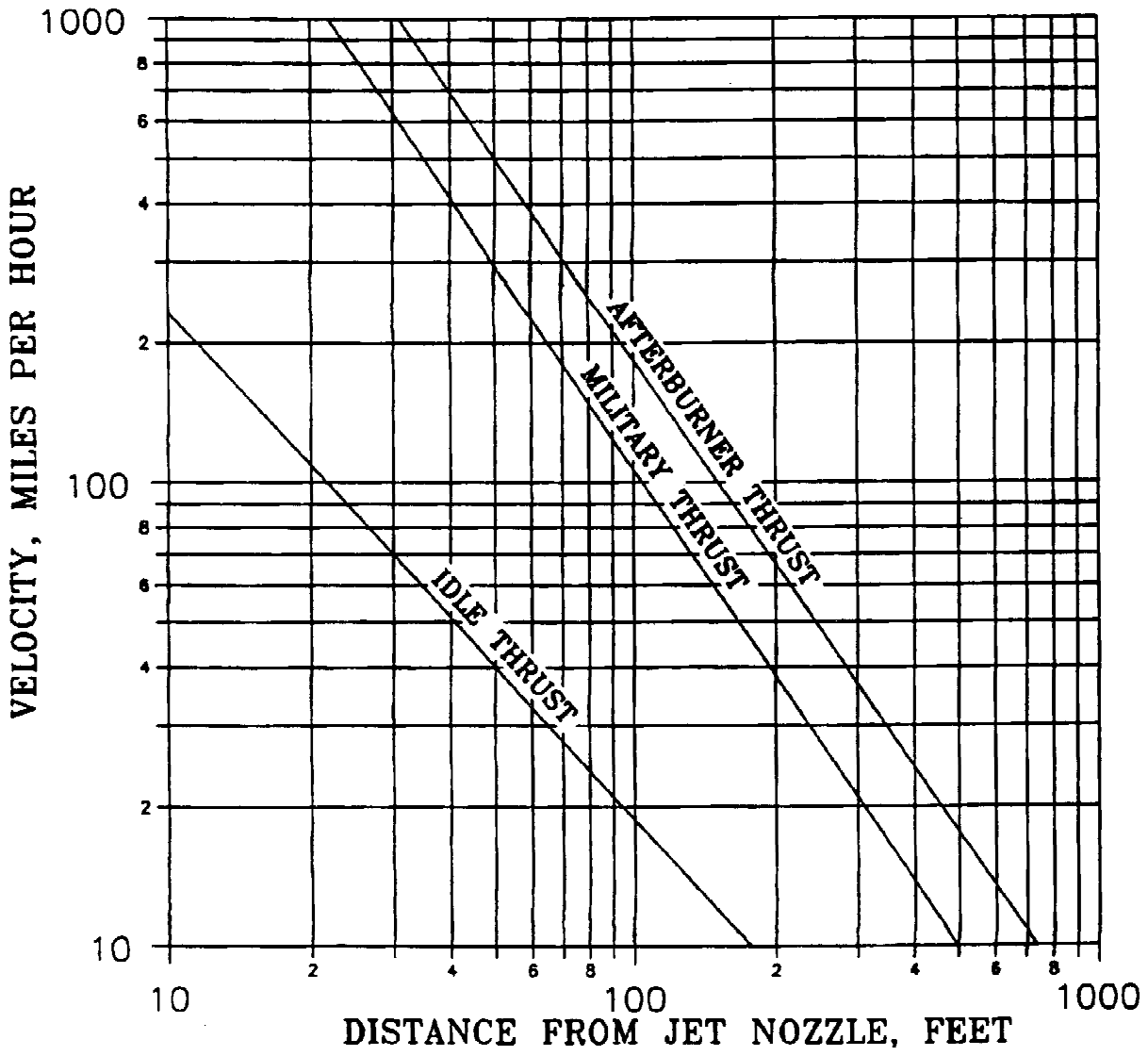


Figure E-41. F-111A/E, Velocity - Distance Curves

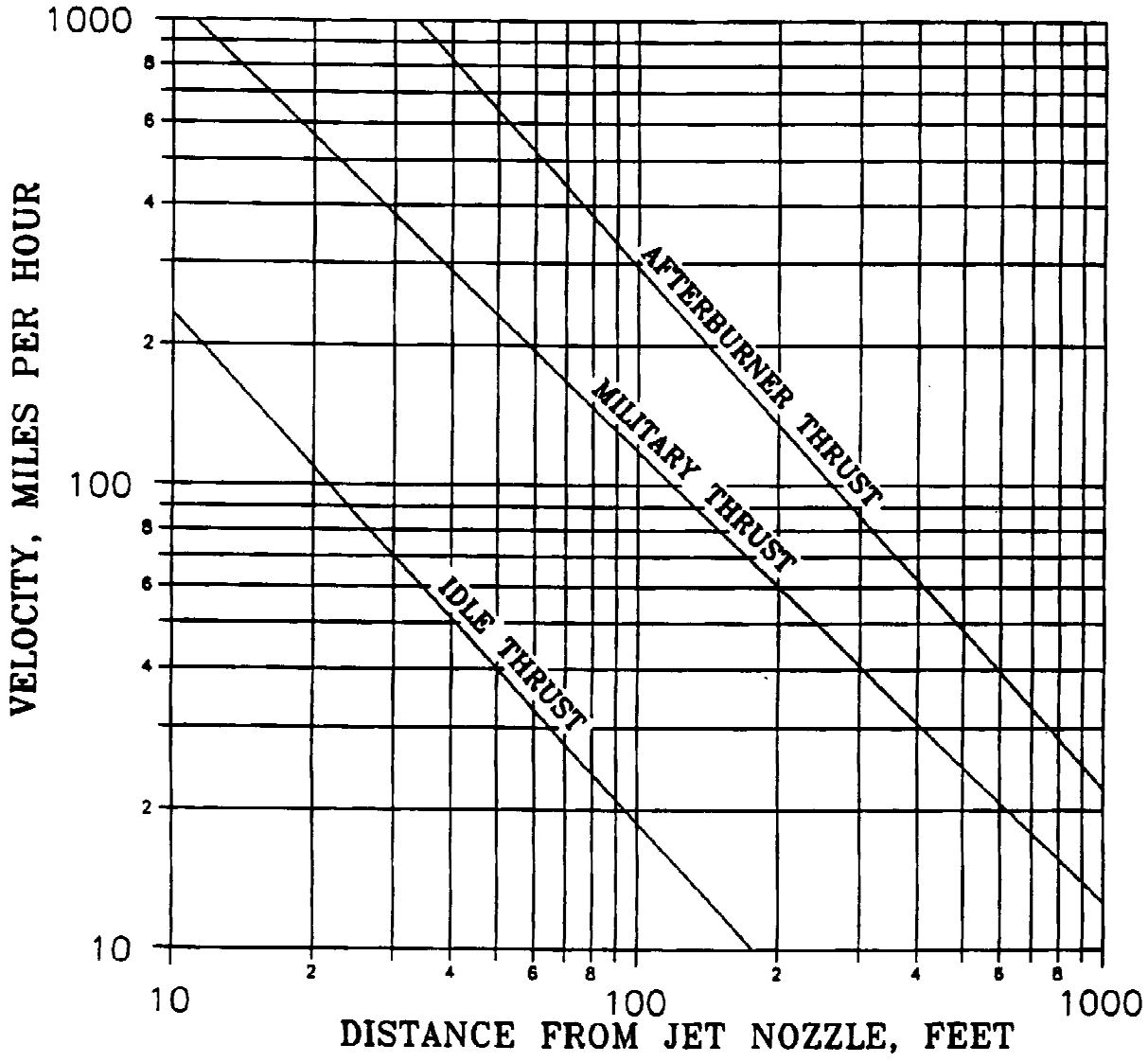


Figure E42. F-111D, Velocity - Distance Curves

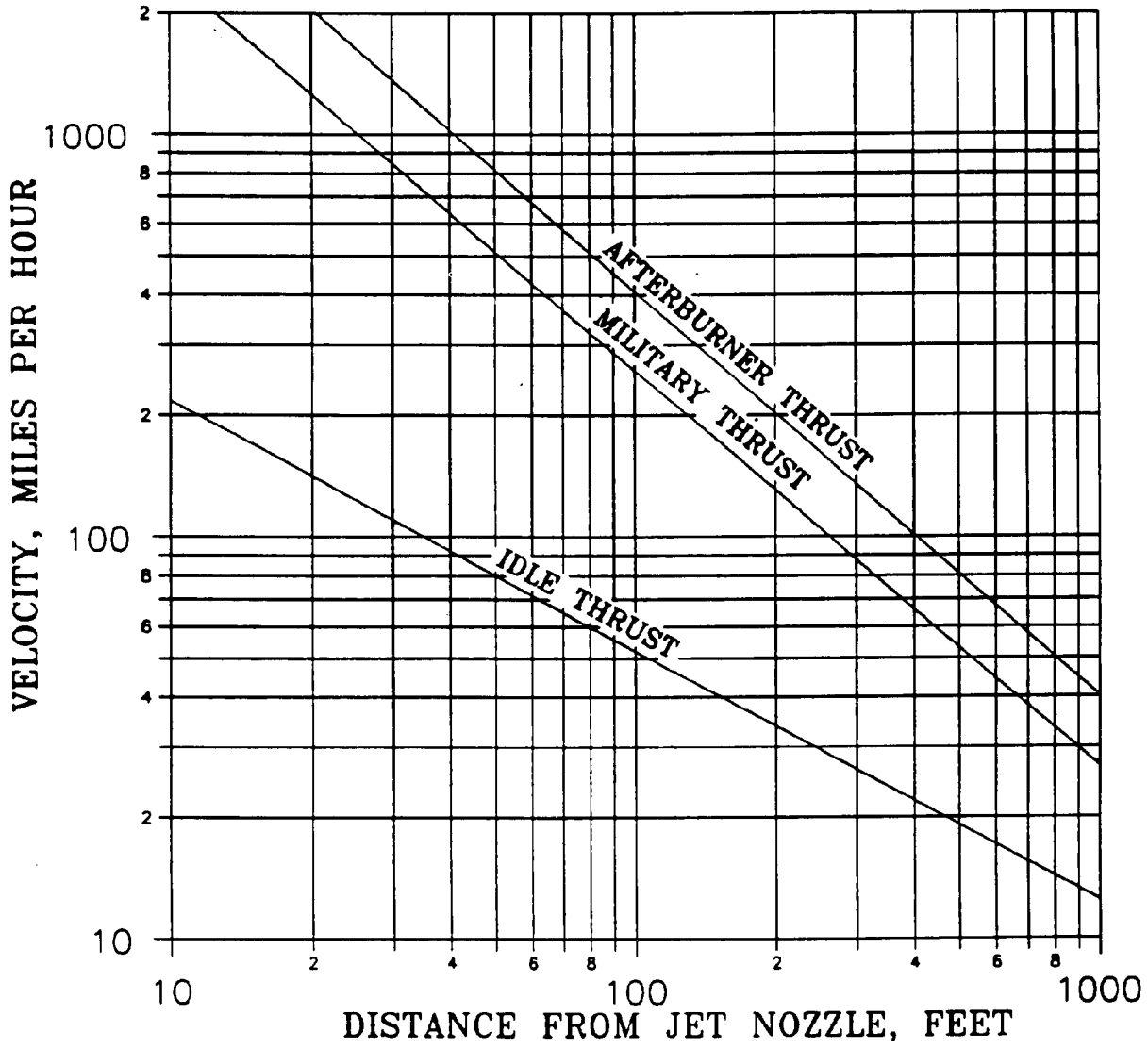


Figure E-43. F-111F, Velocity - Distance Curves