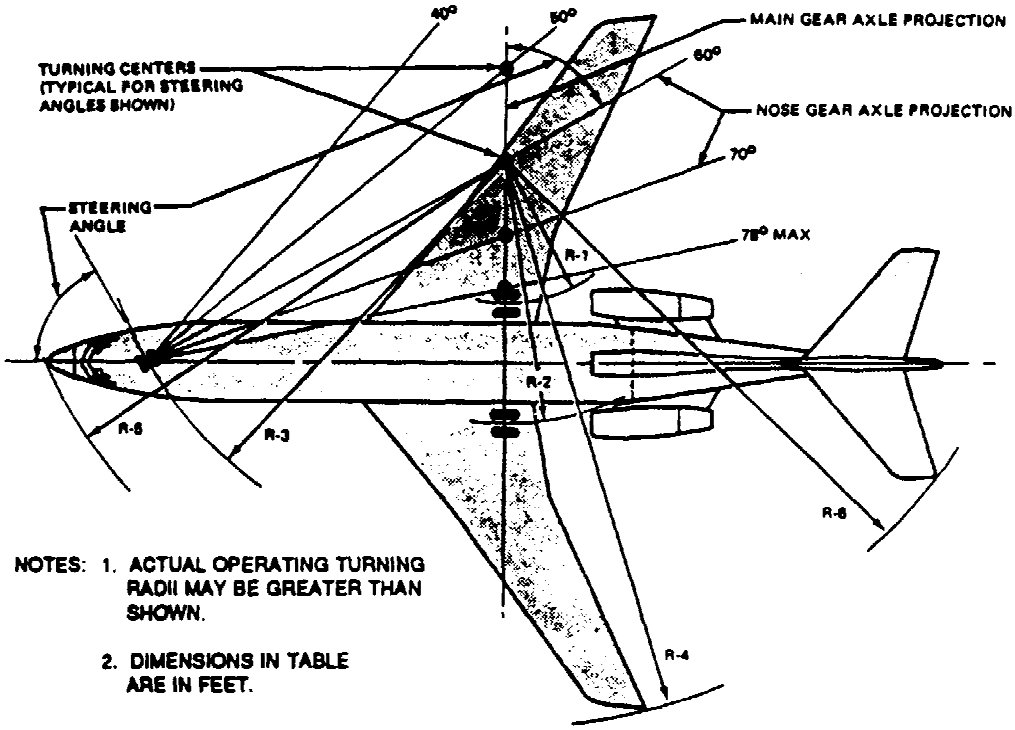

NOTES: 1. ACTUAL OPERATING TURNING RADII MAY BE GREATER THAN SHOWN.

2. DIMENSIONS IN TABLE ARE IN FEET.

STEERING ANGLE (DEGREES)	R-1	R-2	R-3	R-4	R-5	R-6
	INNER GEAR	OUTER GEAR	NOSE GEAR	WING TIP	NOSE	TAIL
30	83	102	106	148	115	127
35	67	86	93	132	102	114
40	54	73	83	120	93	103
45	44	63	75	109	87	96
50	35	54	70	101	82	89
55	28	47	65	94	78	85
60	21	40	62	87	75	80
65	15	34	59	82	73	77
70	10	29	57	77	71	74
75	6	24	55	72	70	72
78 (MAXIMUM)	2	21	54	69	69	71

Figure D—66. Boeing 727-100/-100C,
Turning Radii — No Slip Angle

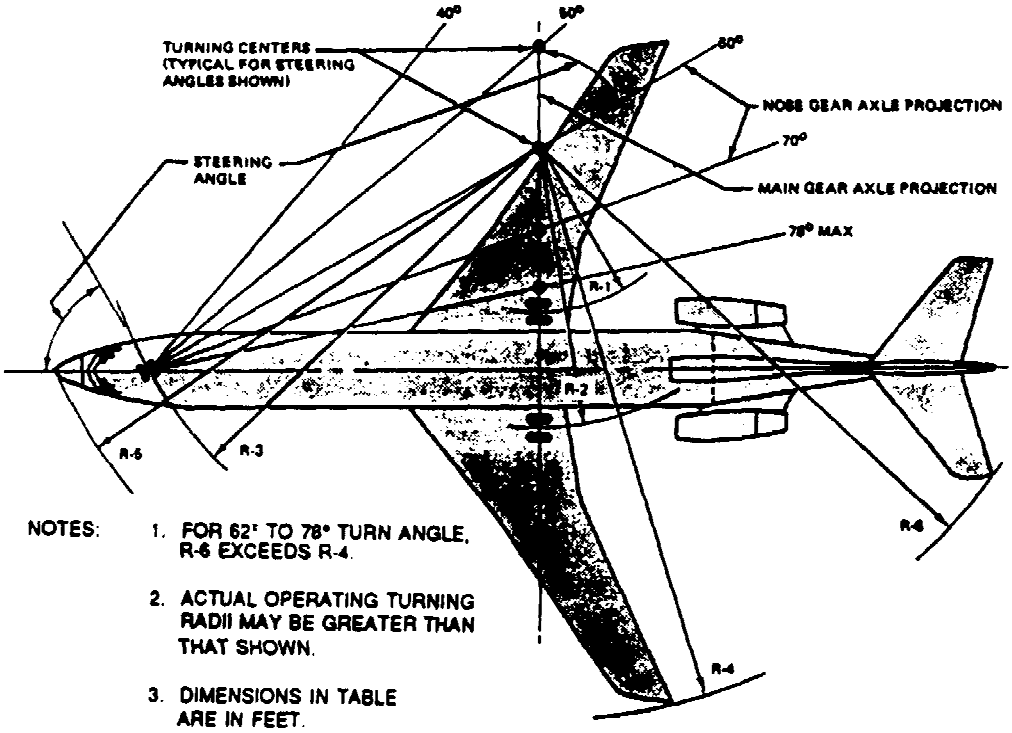

NOTES:

1. FOR 62° TO 78° TURN ANGLE, R-6 EXCEEDS R-4.
2. ACTUAL OPERATING TURNING RADII MAY BE GREATER THAN THAT SHOWN.
3. DIMENSIONS IN TABLE ARE IN FEET.

STEERING ANGLE (DEGREES)	R-1	R-2	R-3	R-4	R-5	R-6
	INNER GEAR	OUTER GEAR	NOSE GEAR	WING TIP	NOSE	TAIL
30	100	119	126	168	135	147
35	81	100	110	146	120	131
40	66	85	99	131	109	119
45	54	73	90	119	101	110
50	44	63	8[illegible]	109	95	103
55	35	54	77	100	90	97
60	27	46	73	93	86	92
65	20	39	70	86	84	88
70	14	33	67	80	81	85
75	8	27	66	74	80	82
78 (MAXIMUM)	4	23	65	71	79.5	80

Figure D—67. Boeing 727—200, Turning Radii — No Slip Angle

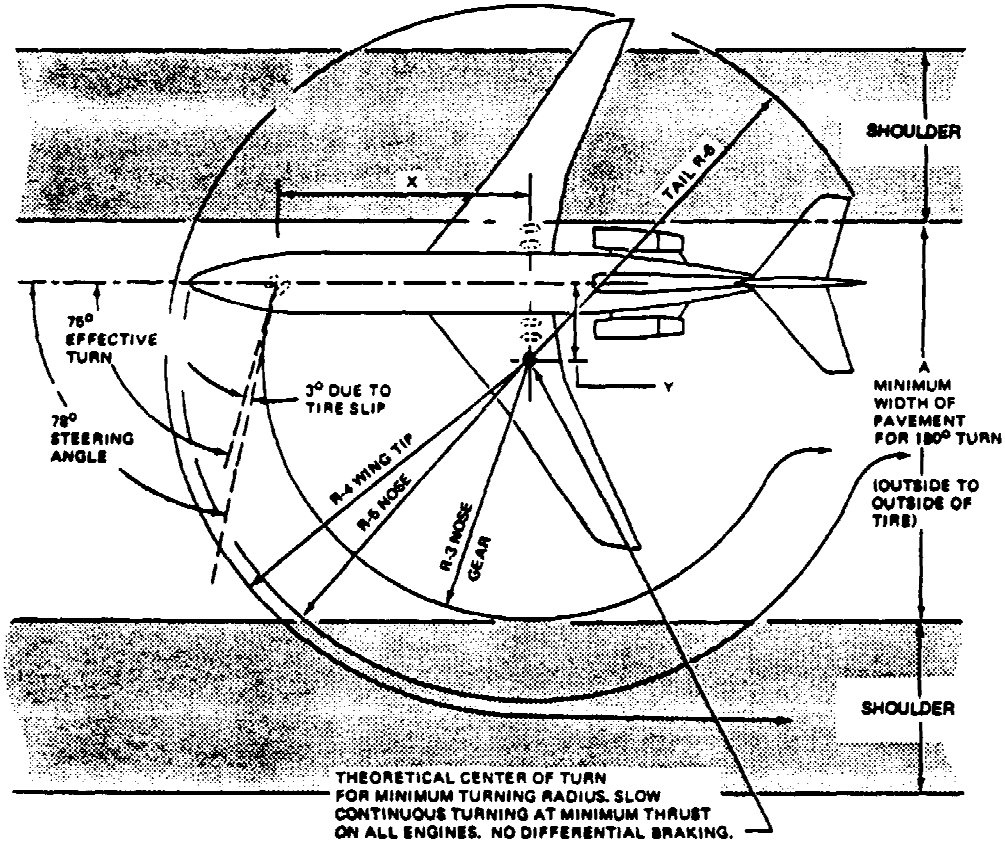

NOTES: 1. 3° TIRE SLIP ANGLE APPROXIMATE FOR 78° TURN ANGLE.

2. DIMENSIONS IN TABLE ARE IN FEET.

FOR AN EFFECTIVE TURN ANGLE OF 75°							
MODEL	X	Y	A	R-3	R-4	R-5	R-6
727-100 -100C	53.3	14.3	82.5	55.0	72.0	70.0	72.0
727-200	63.3	16.9	95.7	66.0	74.0	80.0	82.0

Figure D—68. Boeing 727-100/-100C/-200, Minimum Turning Radii — 3° Slip Angle

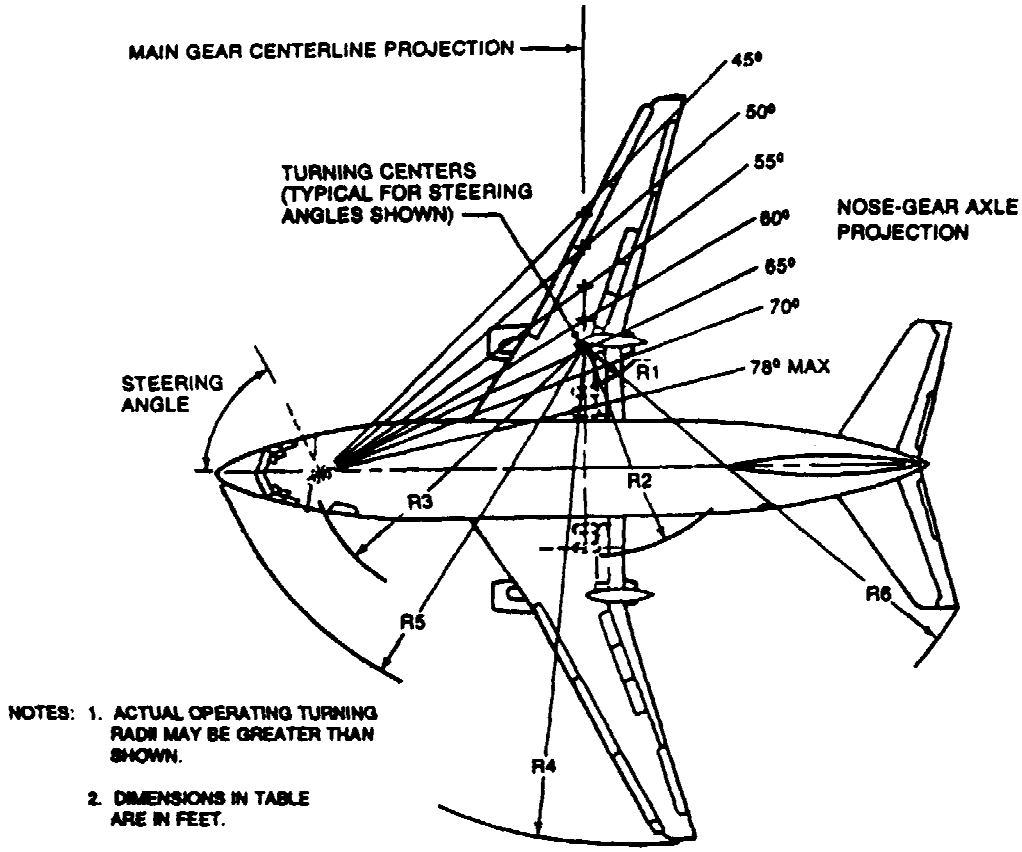

STEERING ANGLE (DEGREES)	R1	R2	R3	R4	R5	R6
	INNER GEAR	OUTER GEAR	NOSE GEAR	WING TIP	NOSE	TAIL
30	48	70	70	107	76	90
45	24	45	50	82	58	70
50	18	39	46	76	55	66
55	13	35	43	72	53	63
60	9	30	41	68	51	60
65	5	26	39	64	50	58
70	2	23	37	60	49	56
78 (MAXIMUM)	-3	18	36	55	48	53

Figure D—69. Boeing 737-100, Turning Radii — No Slip Angle

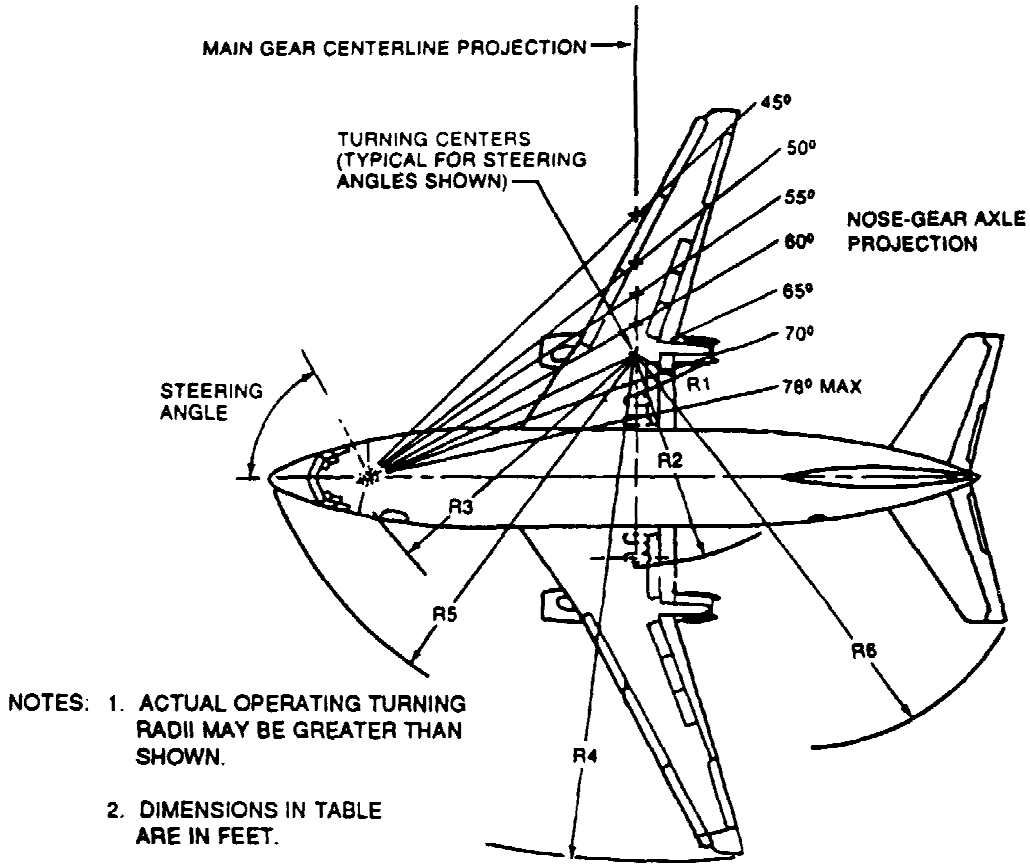

NOTES: 1. ACTUAL OPERATING TURNING RADII MAY BE GREATER THAN SHOWN.

2. DIMENSIONS IN TABLE ARE IN FEET.

STEERING ANGLE (DEGREES)	R1	R2	R3	R4	R5	R6
	INNER GEAR	OUTER GEAR	NOSE GEAR	WING TIP	NOSE	TAIL
30	54	75	76	112	82	96
45	27	48	54	85	63	74
50	21	42	50	79	59	70
55	16	37	47	74	57	67
60	11	32	44	70	55	64
65	7	28	42	65	53	61
70	3	24	41	62	52	59
78 (MAXIMUM)	-3	18	39	56	51	56

Figure D–70. Boeing 737–200, Turning Radii – No Slip Angle

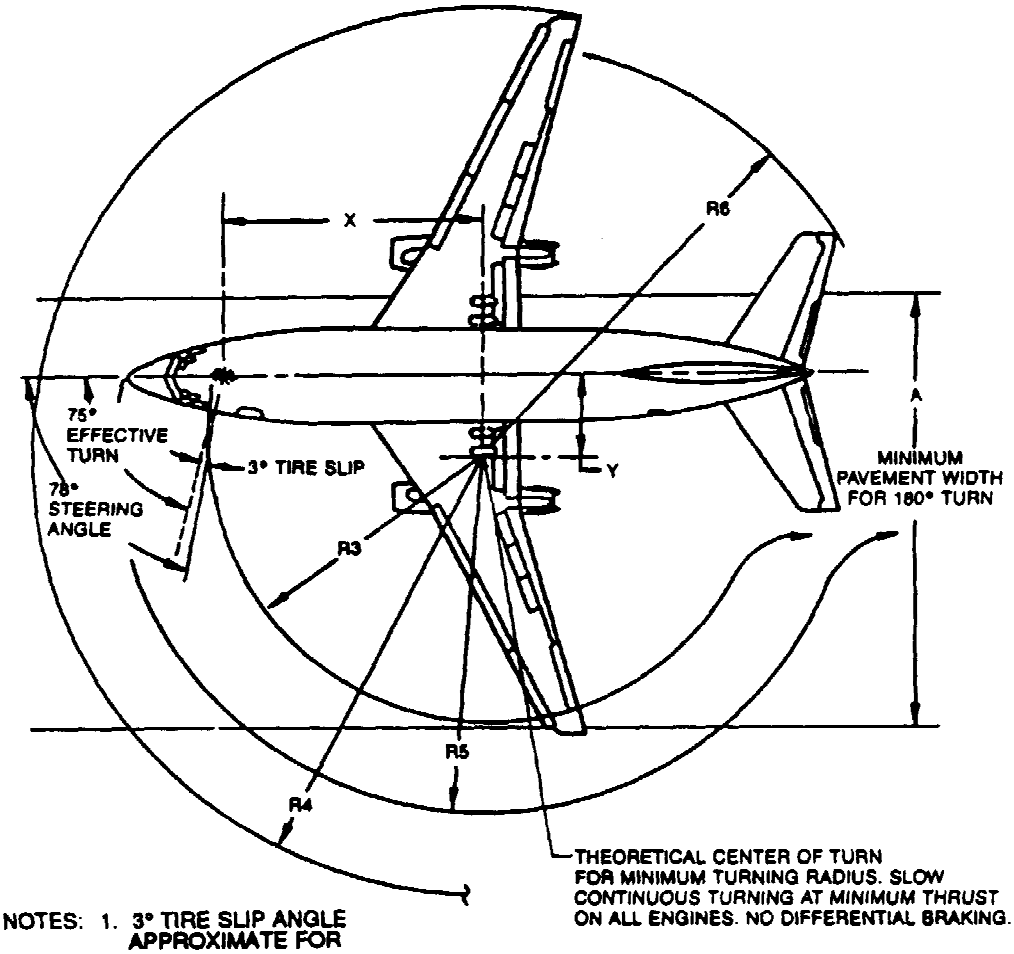

NOTES: 1. 3° TIRE SLIP ANGLE APPROXIMATE FOR 78° TURN ANGLE.

2. DIMENSIONS IN TABLE ARE IN FEET.

MODEL	EFFECTIVE TURNING ANGLE	X	Y	A	R3	R4	R5	R6
737-100	75°	34.3	9.2	56.1	36.5	57.2	48.2	54.0
737-200	75°	37.3	10.0	60.0	39.6	58.2	51.3	57.0

Figure D—71. Boeing 737-100/-200, Minimum Turning Radii — 3° Slip Angle

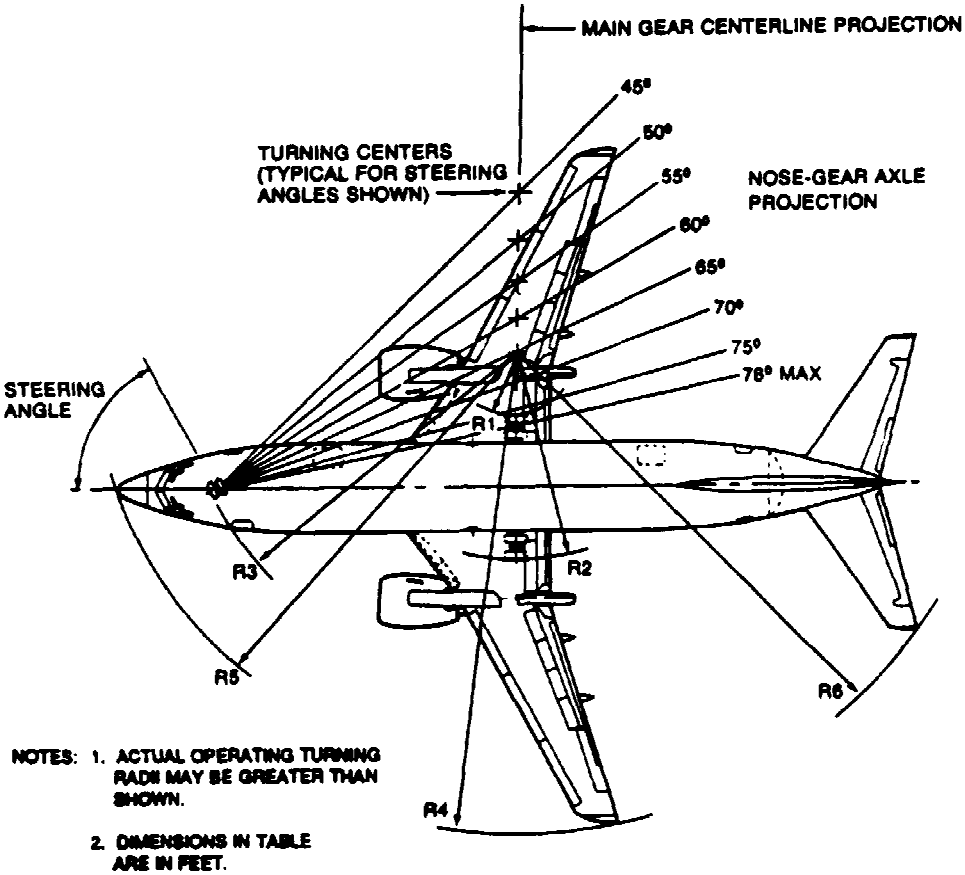

STEERING ANGLE (DEGREES)	R1	R2	R3	R4	R5	R6
	INNER GEAR	OUTER GEAR	NOSE GEAR	WING TIP	NOSE	TAIL
30	60	81	83	119	89	107
45	30	51	59	90	68	83
50	24	45	54	83	64	78
55	18	39	51	77	61	74
60	13	34	48	73	59	71
65	9	30	46	68	57	68
70	4	25	44	64	56	66
78 (MAXIMUM)	-2	19	43	58	55	63

Figure D—72. Boeing 737—300, Turning Radii — No Slip Angle

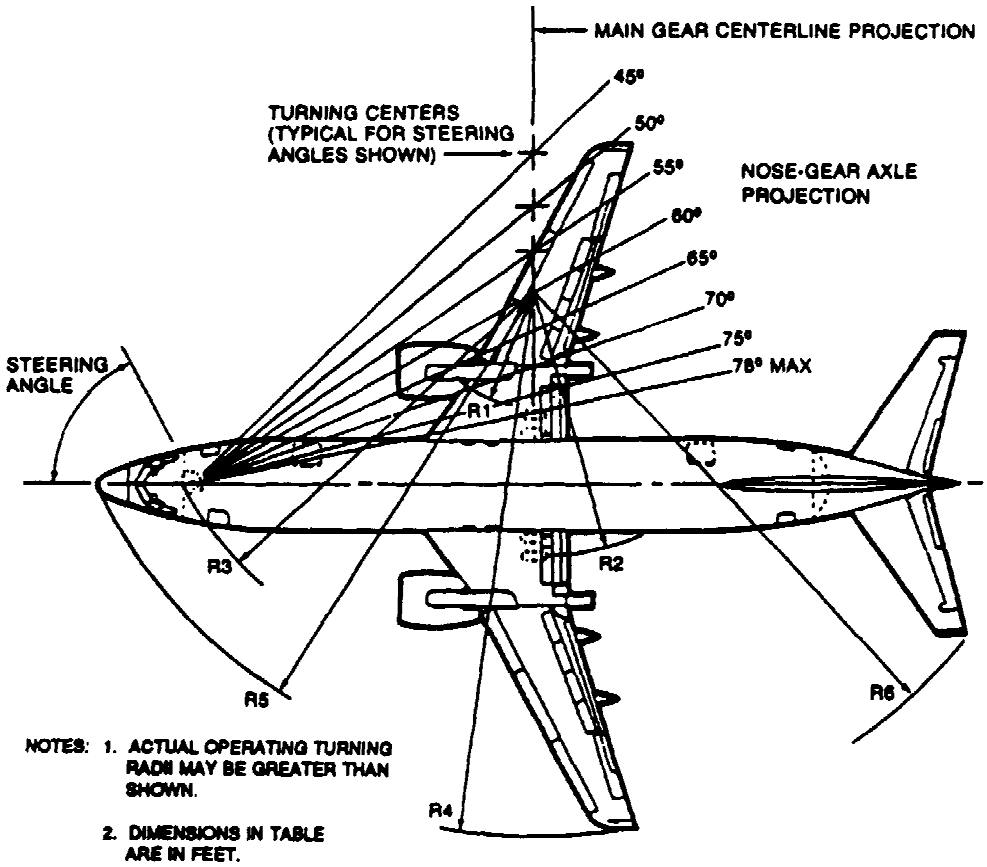

STEERING ANGLE (DEGREES)	R1	R2	R3	R4	R5	R6
	INNER GEAR	OUTER GEAR	NOSE GEAR	WING TIP	NOSE	TAIL
30	71	92	96	129	101	118
45	36	57	67	95	76	90
50	29	50	62	86	72	85
55	22	43	58	82	68	80
60	17	38	55	76	66	76
65	11	32	53	71	64	73
70	7	28	51	68	62	71
78 (MAXIMUM)	-1	20	49	59	61	67

Figure D—73. Boeing 737—400, Turning Radii — No Slip Angle

NOTES: 1. 3° TIRE SLIP ANGLE APPROXIMATE FOR 78° TURN ANGLE.

2. DIMENSIONS IN TABLE ARE IN FEET.

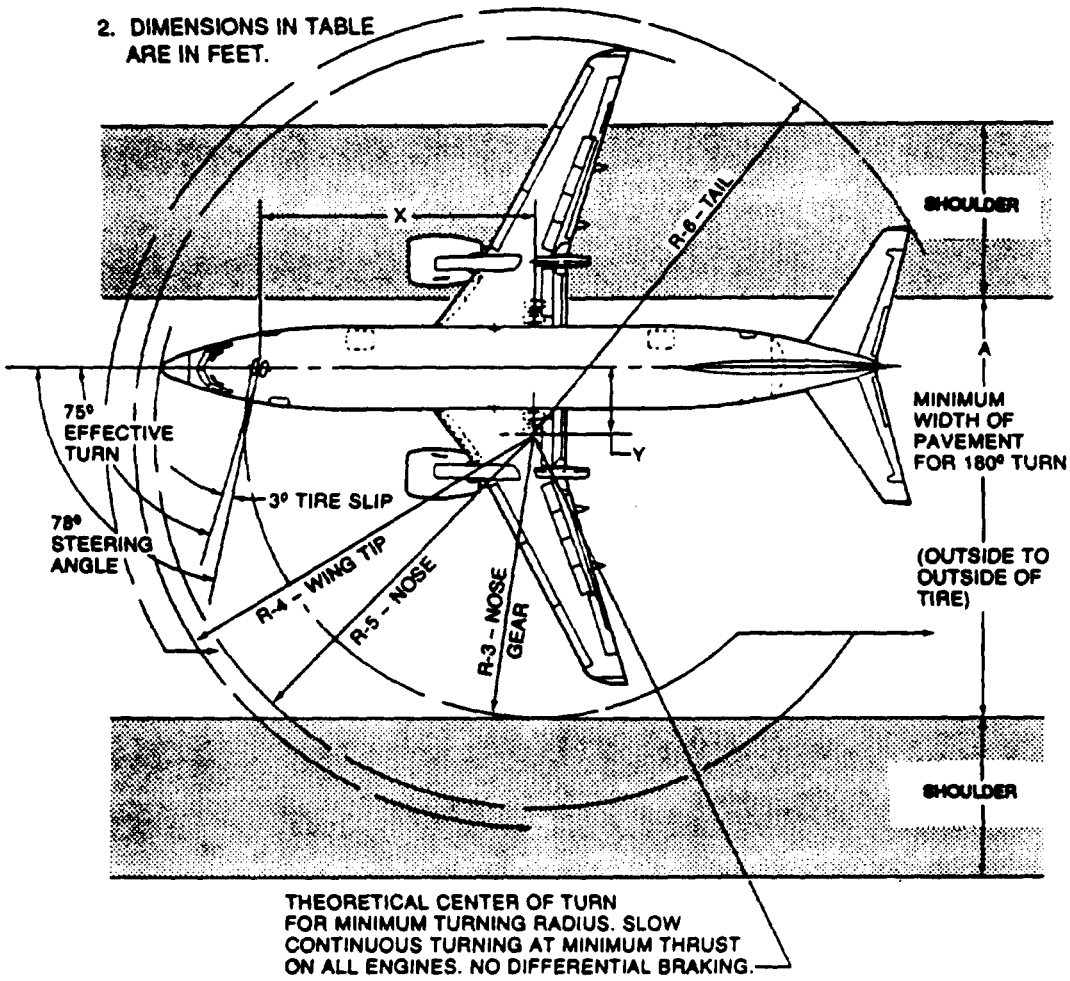

AIRPLANE MODEL	EFFECTIVE TURNING ANGLE	X	Y	A	R-3	R-4	R-5	R-6
737-300	75°	40.8	11.0	64.6	43.3	60.2	55.0	64.0
737-400	75°	46.8	12.5	72.4	49.4	61.8	61.3	68.3

FigureD—74. Boeing 737-300/-400, Minimum Turning Radii - 3° Slip Angle

X TURN RADIUS (FEET) [4]	RADIUS (FEET)										Z [3] MINIMUM WIDTH FOR 180° TURN (FEET)	
	A WING TIP		B [3] NOSE GEAR		C [3] WING GEAR		D TAIL TIP		E NOSE			
	[1]	[2]	[1]	[2]	[1]	[2]	[1]	[2]	[1]	[2]	[1]	[2]
0	113	115	86	81	23	21	125	130	110	105	109	102
20	131	133	89	84	42	41	132	136	111	108	131	126
40	149	151	96	92	62	61	142	146	116	112	158	153
60	169	170	106	102	82	81	153	156	125	121	186	183
80	186	187	116	115	102	101	167	170	136	132	220	216
100	206	205	133	130	121	121	181	184	149	146	254	251
120	225	226	149	146	141	141	197	200	163	160	290	287
140	244	245	165	163	161	161	213	216	178	175	327	324
160	264	265	183	181	181	181	230	232	195	192	364	362

[1] BODY GEAR STEERING INOPERATIVE

[2] WITH BODY GEAR STEERING

[3] MEASURED TO OUTSIDE TIRE FACES

[4] WITH BODY GEAR OPERATING, TURN CENTER PASSES THROUGH WING LANDING GEAR. WITH BODY GEAR NOT OPERATING, TURN CENTER PASSES APPROXIMATELY HALFWAY BETWEEN WING GEAR AND BODY GEAR.

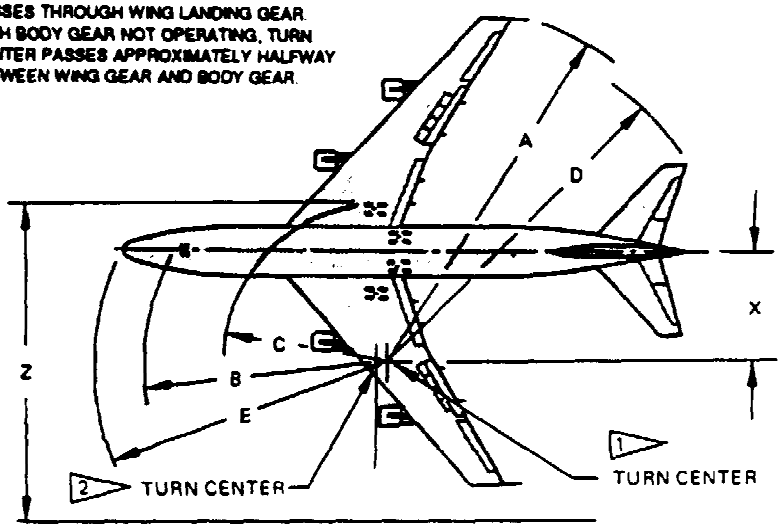

Figure D—75. Boeing 747-100B/-200B-Pass/-200C-Pass/ -200C-Cargo/-200F-Cargo/-300-Pass, Turning Radii

X TURN RADIUS (FEET)	RADIUS (FEET)										Z ③ MINIMUM WIDTH FOR 180° TURN (FEET)	
	A④ WING TIP		B③ NOSE GEAR		C③ WING GEAR		D TAIL TIP		E NOSE			
	①	②	①	②	①	②	①	②	①	②	①	②
40	157	159	96	91	61	61	142	146	117	112	156	152
60	176	177	106	102	81	81	154	158	125	120	187	183
80	196	196	119	115	101	101	167	171	136	132	219	216
100	214	215	133	130	121	121	182	186	148	145	254	251
120	233	234	149	146	141	141	197	200	162	159	290	287
140	253	254	166	163	161	161	213	216	176	175	327	324
160	272	273	183	181	181	181	230	233	194	191	364	362

① BODY GEAR STEERING INOPERATIVE

② WITH BODY GEAR STEERING

③ MEASURED TO OUTSIDE TIRE FACES

④ WINGSPAN AT 213 FT

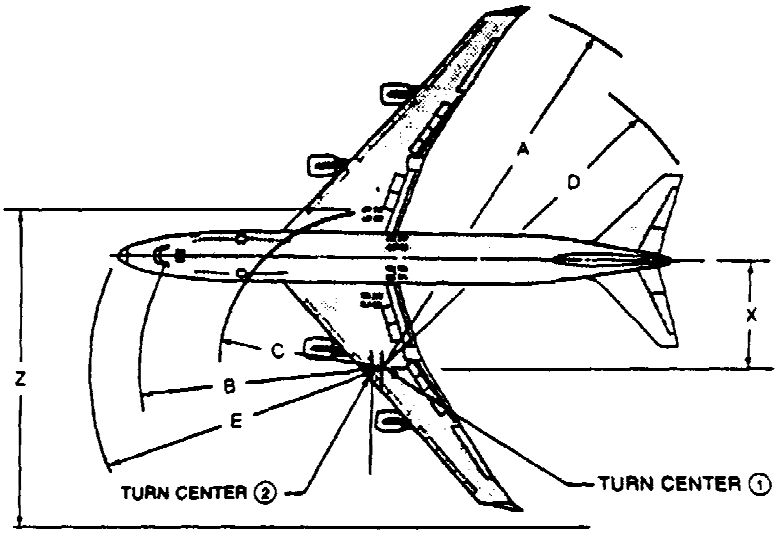

Figure D–76. Boeing 747–400, Turning Radii

X TURN RADIUS (FEET) [4]	RADIUS (FEET)										Z [3] MINIMUM WIDTH FOR 180° TURN (FEET)	
	A WING TIP		B [3] NOSE GEAR		C [3] WING GEAR		D TAIL TIP		E NOSE			
	[1]	[2]	[1]	[2]	[1]	[2]	[1]	[2]	[1]	[2]	[1]	[2]
0	113	115	70	66	23	21	97	101	93	88	93	86
20	131	133	74	69	42	41	107	111	98	91	116	110
40	149	151	81	77	62	61	119	122	101	97	143	138
60	168	170	93	90	82	81	134	137	111	107	175	171
80	186	187	108	105	102	101	150	153	123	119	210	206
100	205	206	124	121	121	121	166	169	137	134	245	242
120	225	226	141	138	141	141	184	186	152	149	282	279
140	244	245	158	156	161	161	202	204	168	166	319	317
160	264	265	177	175	181	181	220	222	185	183	358	356

[1] BODY GEAR STEERING INOPERATIVE

[2] WITH BODY GEAR STEERING

[3] MEASURED TO OUTSIDE TIRE FACES

[4] WITH BODY GEAR OPERATING, TURN CENTER PASSES THROUGH WING LANDING GEAR. WITH BODY GEAR NOT OPERATING, TURN CENTER PASSES APPROXIMATELY HALFWAY BETWEEN WING GEAR AND BODY GEAR.

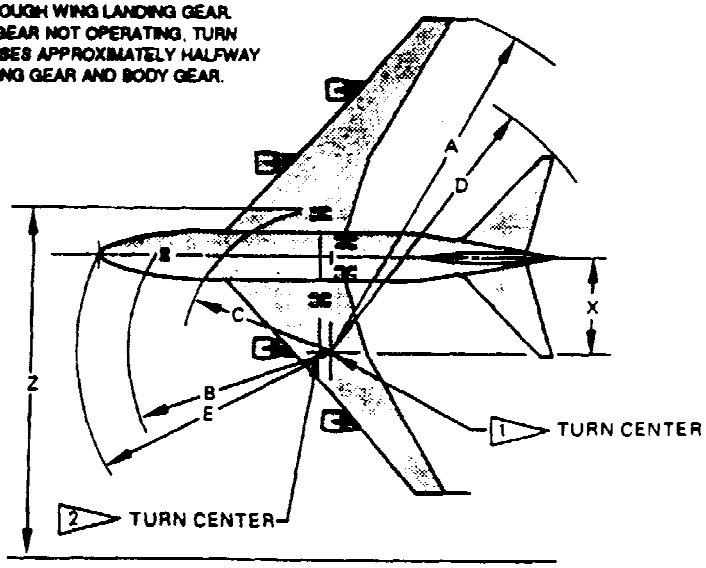

Figure D–77. Boeing 747SP, Turning Radii

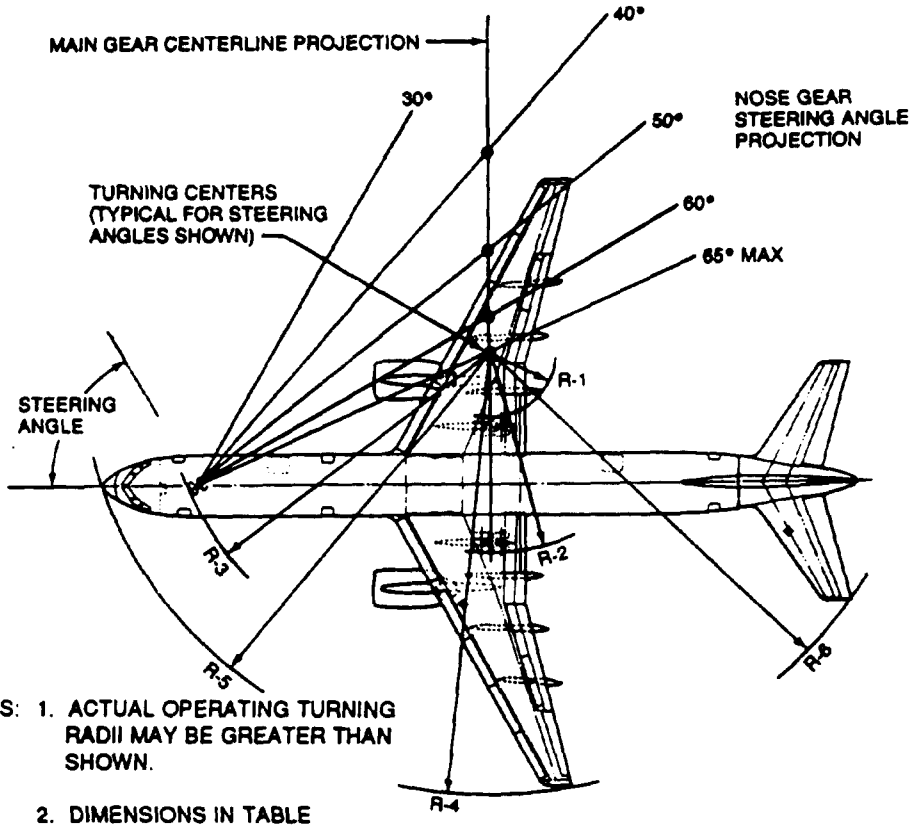

NOTES: 1. ACTUAL OPERATING TURNING RADII MAY BE GREATER THAN SHOWN.

2. DIMENSIONS IN TABLE ARE IN FEET.

STEERING ANGLE (DEGREES)	R-1	R-2	R-3	R-4	R-5	R-6
	INNER GEAR	OUTER GEAR	NOSE GEAR	WING TIP	NOSE	TAIL
30	90	118	122	167	131	149
35	72	100	106	149	117	133
40	58	86	95	135	107	121
45	46	74	86	124	99	112
50	36	64	80	114	94	105
55	28	56	75	106	90	100
60	21	49	71	98	87	95
65 (MAXIMUM)	14	42	68	92	84	91

Figure D—78. Boeing 757-200, Turning Radii — No Slip Angle

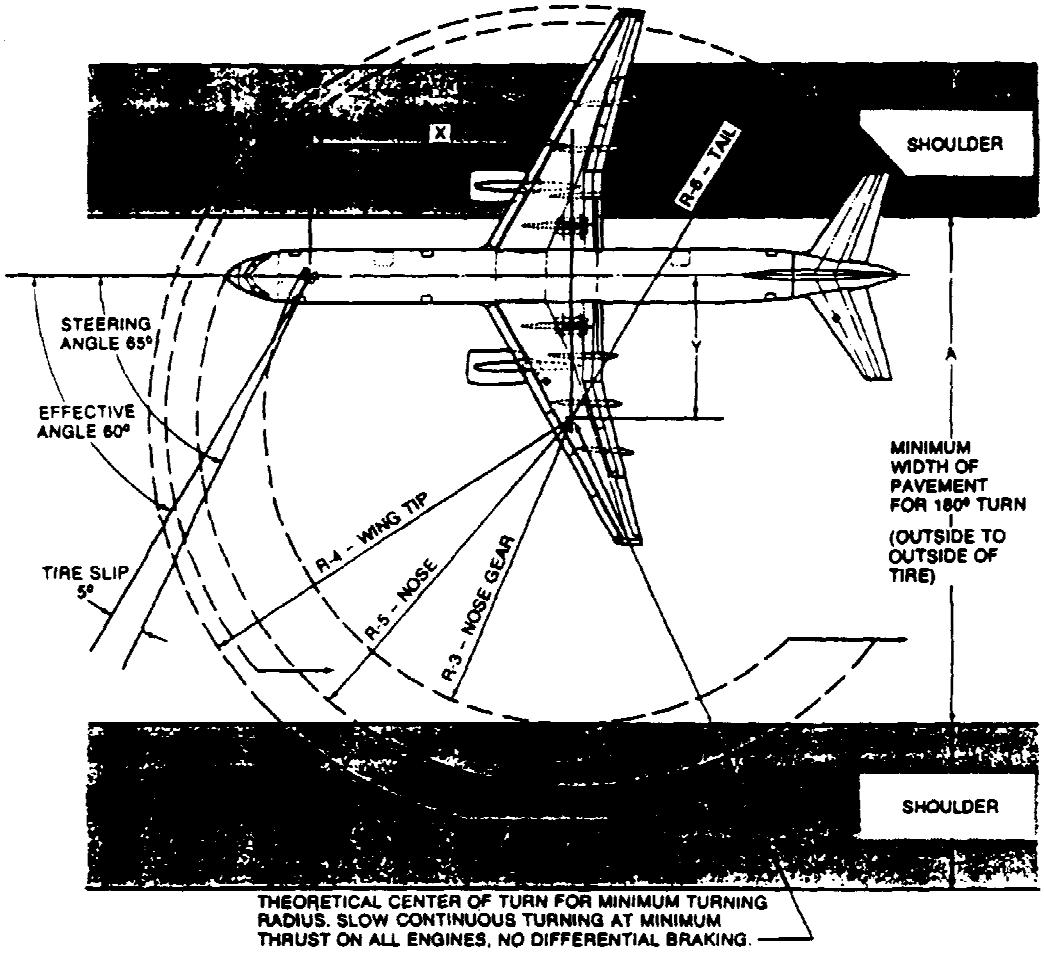

EFFECTIVE TURNING ANGLE	X	Y	A	R-3	R-4	R-5	R-6
60°	60	35	120	71	98	87	95

NOTES: 1. 5° TIRE SLIP ANGLE APPROXIMATE FOR 65° TURN ANGLE.
2. DIMENSIONS IN TABLE ARE IN FEET.

Figure D-79. Boeing 757–200, Minimum Turning Radii – 5° Slip Angle

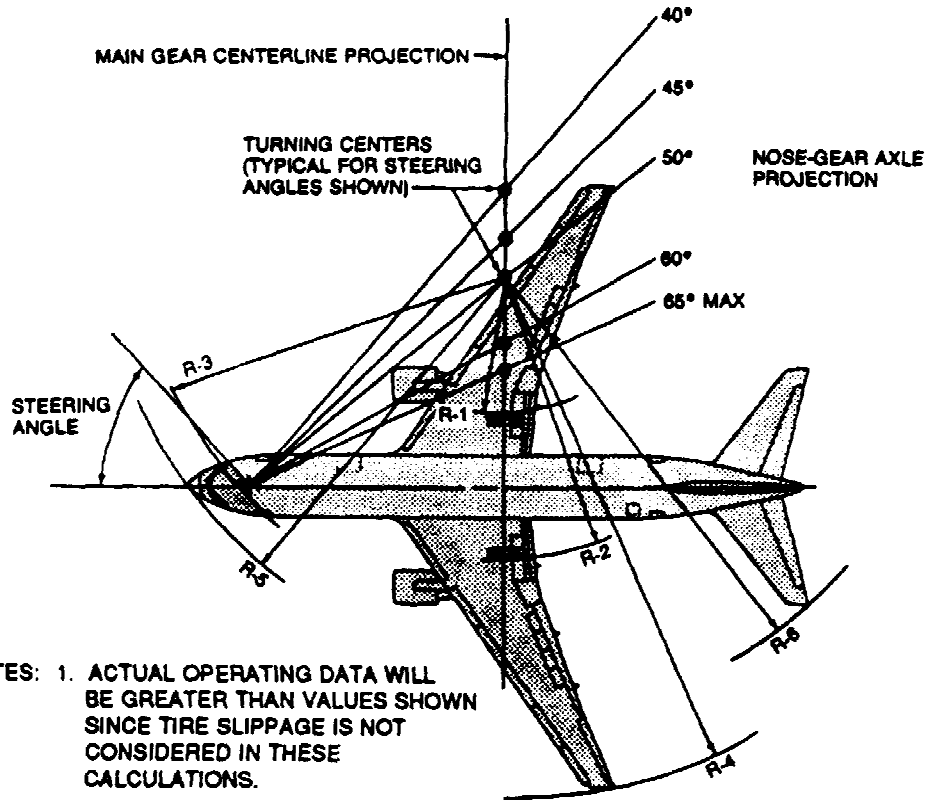

NOTES: 1. ACTUAL OPERATING DATA WILL BE GREATER THAN VALUES SHOWN SINCE TIRE SLIPPAGE IS NOT CONSIDERED IN THESE CALCULATIONS.

2. DIMENSIONS IN TABLE ARE IN FEET.

STEERING ANGLE (DEGREES)	R-1	R-2	R-3	R-4	R-5	R-6
	INNER GEAR	OUTER GEAR	NOSE GEAR	WING TIP	NOSE	TAIL
30	94	130	131	192	137	162
35	74	110	114	173	122	145
40	58	95	102	158	111	132
45	47	83	93	145	102	122
50	36	72	86	135	96	114
55	27	63	81	127	92	108
60	19	55	76	119	88	102
65 (MAXIMUM)	12	48	73	112	85	98

Figure D—80. Boeing 767-200/-200ER, Turning Radii — No Slip Angle

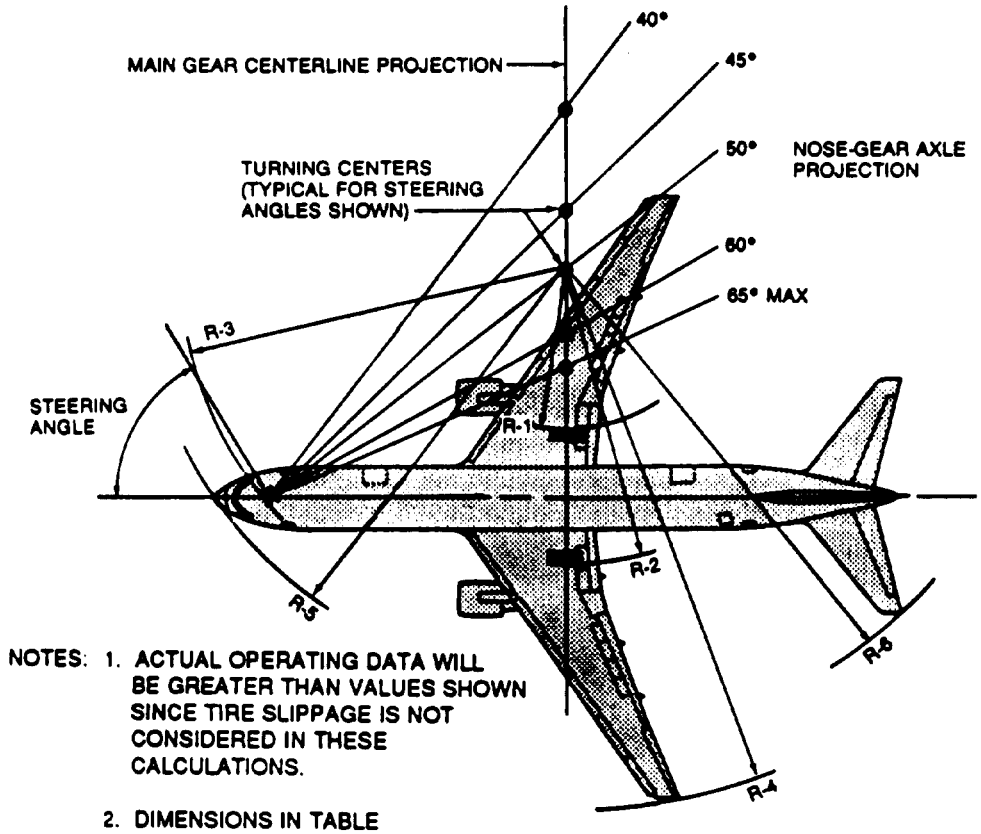

NOTES:
1. ACTUAL OPERATING DATA WILL BE GREATER THAN VALUES SHOWN SINCE TIRE SLIPPAGE IS NOT CONSIDERED IN THESE CALCULATIONS.
2. DIMENSIONS IN TABLE ARE IN FEET.

STEERING ANGLE (DEGREES)	R-1	R-2	R-3	R-4	R-5	R-6
	INNER GEAR	OUTER GEAR	NOSE GEAR	WING TIP	NOSE	TAIL
30	112	147	151	209	157	182
35	89	125	132	187	139	162
40	71	107	118	168	126	148
45	57	93	107	155	117	136
50	45	81	99	144	109	127
55	34	70	93	133	104	120
60	25	61	88	124	99	114
65 (MAXIMUM)	17	53	84	116	96	108

Figure D—81. Boeing 767-300/-300ER, Turning Radii — No Slip Angle

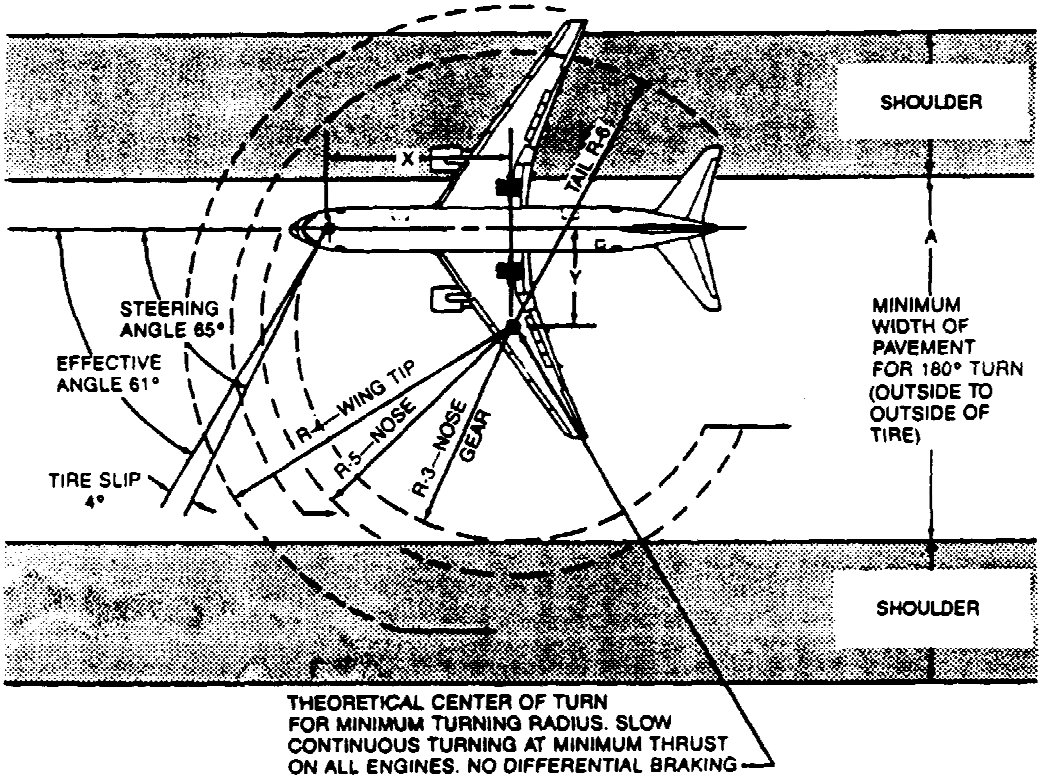

NOTES: 1. 4° TIRE SLIP ANGLE APPROXIMATE FOR 65° TURN ANGLE.

2. DIMENSIONS IN TABLE ARE IN FEET.

MODEL	EFFECTIVE TURNING ANGLE	X	Y	A	R-3	R-4	R-5	R-6
767-200, -200ER	61°	65	36	129	76	117	87	101
767-300, -300ER	61°	75	41	146	87	123	99	113

Figure D—82. Boeing 767-200/-200ER/-300/-300ER, Minimum Turning Radii — 4° Slip Angle

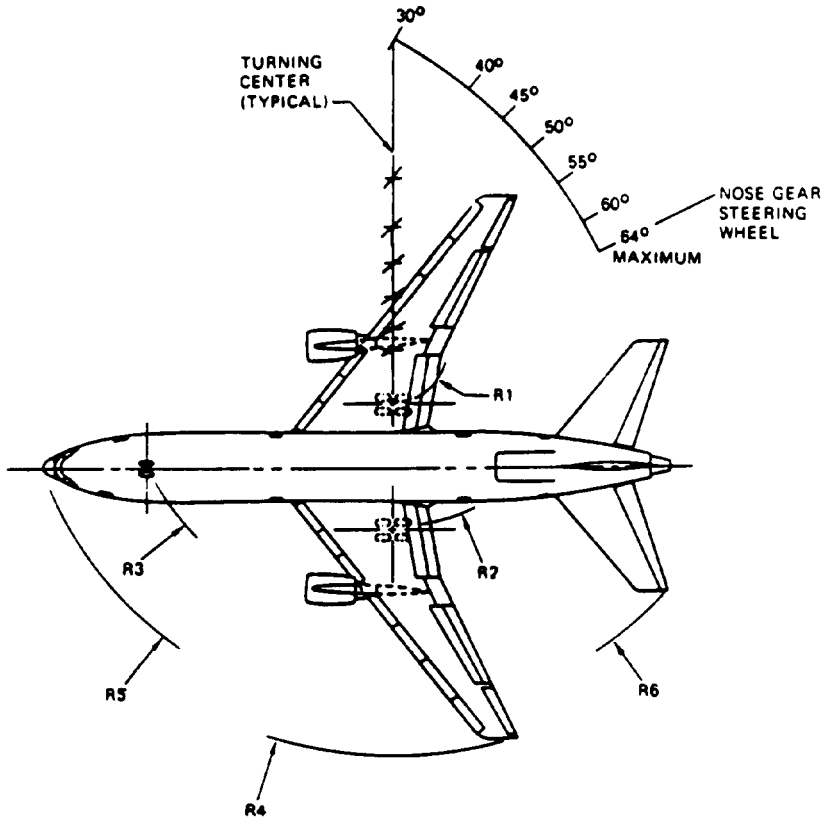

NOTES: 1. ACTUAL OPERATING DATA WILL BE GREATER THAN VALUES SHOWN SINCE TIRE SLIPPAGE IS NOT CONSIDERED IN THESE CALCULATIONS.

2. DIMENSIONS IN TABLE ARE IN FEET.

STEERING ANGLE (DEGREES)	R1	R2	R3	R4	R5	R6
30	103.3	139.3	140.0	201.7	167.0	174.6
40	65.4	101.4	108.9	164.6	130.0	141.6
45	52.0	88.0	99.0	151.4	121.8	130.5
50	40.8	76.8	91.3	140.5	115.8	121.5
55	31.0	67.0	85.4	131.1	111.2	114.2
60	22.4	58.4	80.8	122.8	107.6	107.9
64 (MAXIMUM)	16.0	52.0	77.9	116.8	105.4	103.5

Figure D—83. Lockheed L-1011-l/-l00/-200,
Turning Radii — No Slip Angle

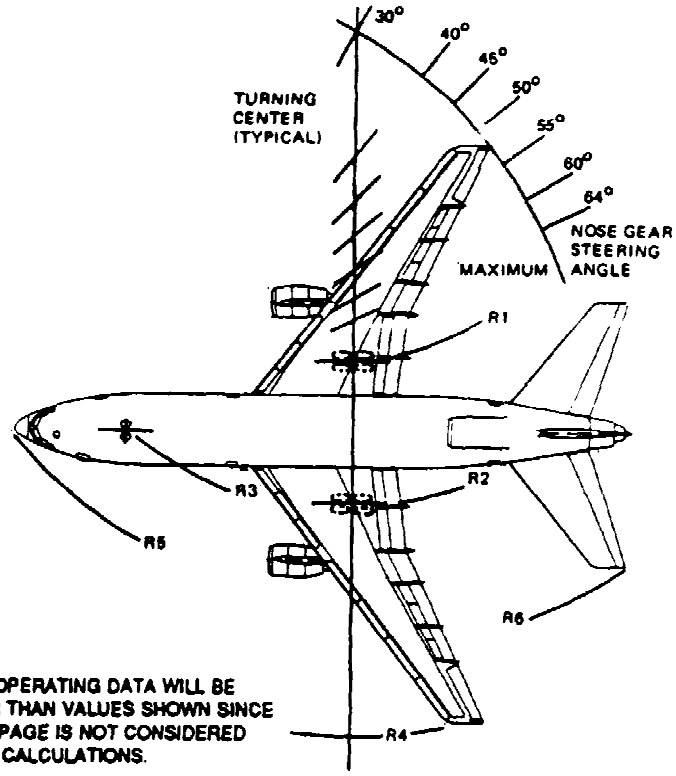

NOTES: 1. ACTUAL OPERATING DATA WILL BE GREATER THAN VALUES SHOWN SINCE TIRE SLIPPAGE IS NOT CONSIDERED IN THESE CALCULATIONS.

2. DIMENSIONS IN TABLE ARE IN FEET.

STEERING ANGLE (DEGREES)	R1	R2	R3	R4	R5	R6	R4*
30	88.8	124.8	123.4	187.8	140.7	169.5	192.8
40	58.4	91.4	96.0	154.9	117.3	130.5	160.0
45	43.6	79.6	87.3	143.4	110.3	120.8	148.5
50	33.7	69.7	80.6	133.8	105.0	112.9	138.9
55	25.1	61.1	75.4	125.5	101.1	106.4	130.6
60	17.5	53.5	71.3	118.3	98.1	100.9	123.3
64 (MAXIMUM)	11.9	47.9	68.8	112.9	96.2	97.1	101.1

Figure D–84. Lockheed L-1011-500 and L-1011-500 Extended Wing, Turning Radii – No Slip Angle

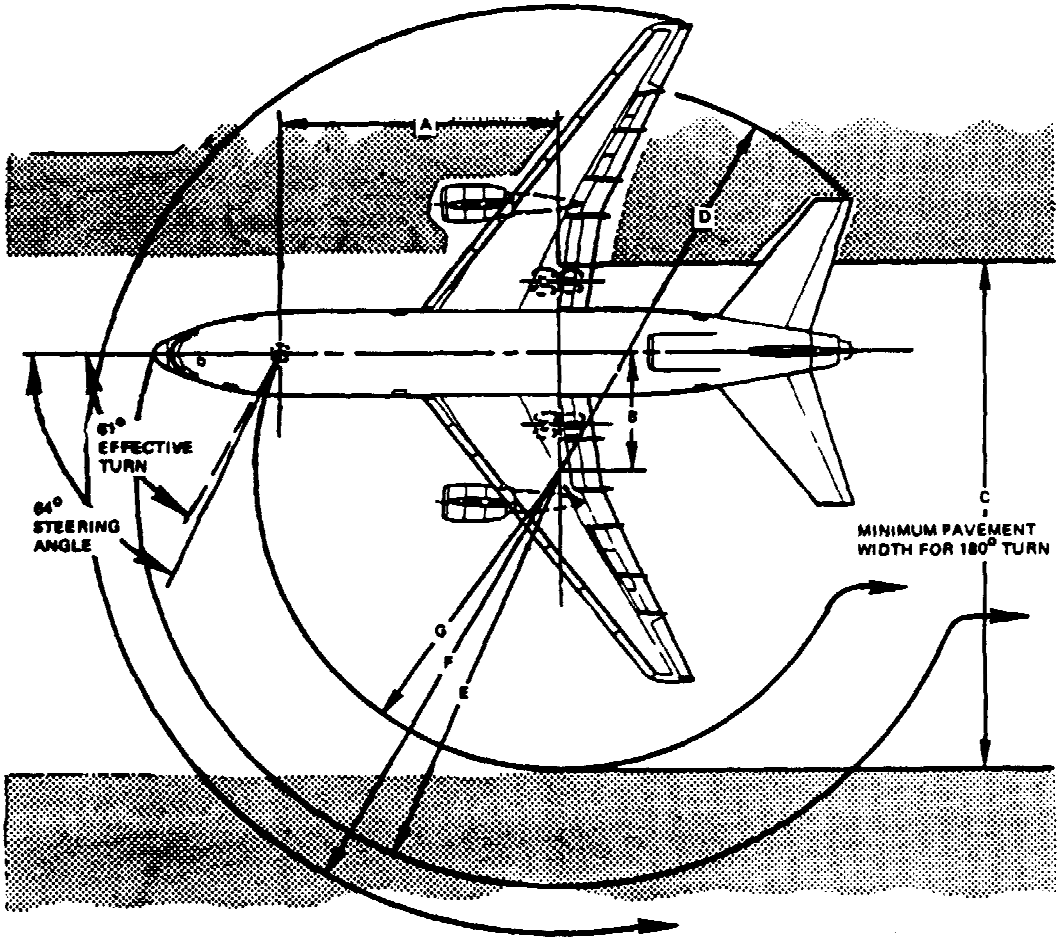

NOTES: 1. 3° TIRE SLIP ANGLE APPROXIMATE FOR 64° TURN ANGLE.

2. DIMENSIONS IN TABLE ARE IN FEET.

▷ THEORETICAL CENTER OF TURN FOR MINIMUM TURNING RADIUS. TURN INITIATED WITH AIRPLANE IN MOTION, APPROXIMATELY IDLE THRUST ON ALL ENGINES. NO DIFFERENTIAL BRAKING.

MODEL	A	B	C	D	E	F	G
L-1011-1 L-1011-100 L-1011-200	70.0	38.8	141.3	106.8	107.0	121.3	80.2
L-1011-500	61.7	34.0	127.5	99.9	97.6	116.8	70.7
L-1011-500 EXTENDED WING	61.7	34.0	127.5	99.9	97.6	122.0	70.7

Figure D—85. Lockheed L-1011-l/-100/-200/-500/-500 Extended Wing, Minimum Turning Radii — 3° Slip Angle

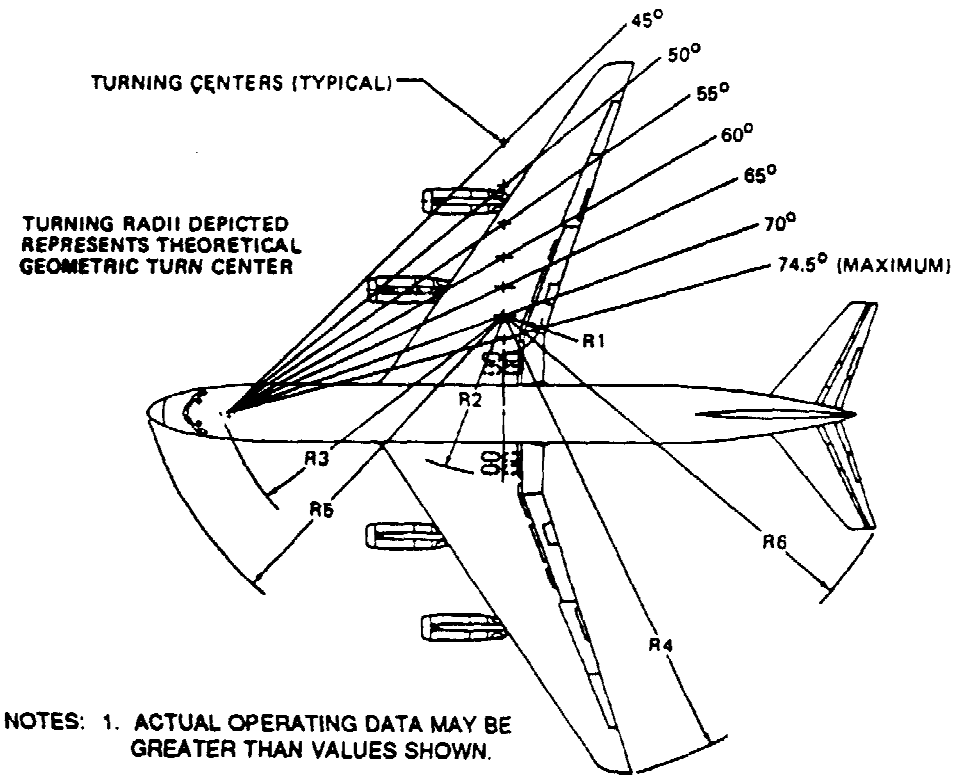

NOTES: 1. ACTUAL OPERATING DATA MAY BE GREATER THAN VALUES SHOWN.

2. DIMENSIONS IN TABLE ARE IN FEET.

STEERING ANGLE (DEGREES)	R1	R2	R3	R4	R5	R6
30	87.3	111.9	115.0	172.7	123.7	145.5
35	69.8	84.4	100.2	156.5	110.1	131.1
40	56.2	80.9	88.5	142.1	100.4	120.4
45	45.2	69.8	81.3	131.3	93.2	112.1
50	35.9	60.6	75.0	122.2	87.6	105.6
55	27.9	52.6	70.2	114.4	83.7	100.3
60	20.9	45.5	66.4	107.6	80.6	95.0
65	14.5	39.1	63.4	101.4	78.2	92.4
70	8.6	33.3	61.2	95.7	76.3	89.3
74.5 (MAXIMUM)	3.6	28.3	59.7	90.9	75.1	86.9

Figure D—86. McDonnell Douglas DC-8-43/-55/-55F, Turning Radii — No Slip Angle

NOTES: 1. 5.5° SLIP ANGLE ASSUMED FOR 74.5° NOSE WHEEL DEFLECTION.

2. DIMENSIONS IN TABLE ARE IN FEET.

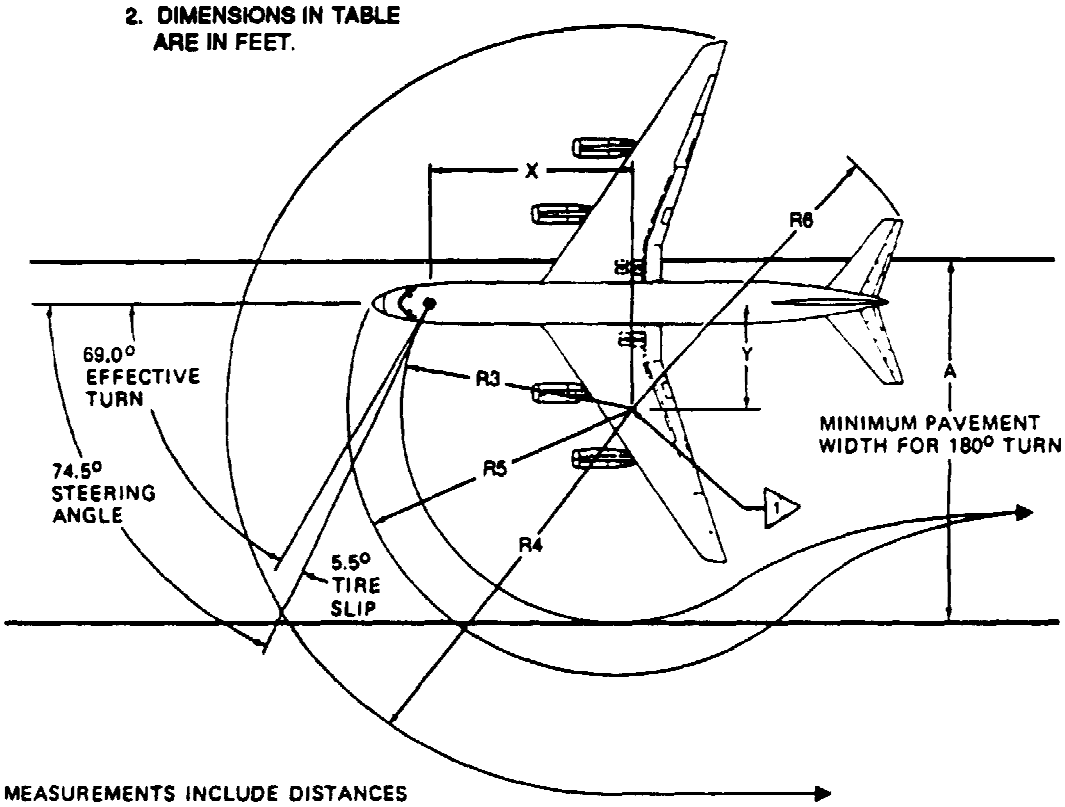

MEASUREMENTS INCLUDE DISTANCES TO OUTSIDE FACE OF NOSE AND MAIN LANDING GEAR TIRES.

1 THEORETICAL CENTER OF TURN FOR MINIMUM TURNING RADIUS. TURN INITIATED WITH AIRCRAFT IN MOTION, APPROXIMATELY IDLE THRUST ON ALL ENGINES WITH NO DIFFERENTIAL BRAKING.

X	Y	A	R3	R4	R5	R6
57.5	22.1	97.2	62.8	96.8	76.6	89.9

Figure D-87. McDonnell Douglas DC-8-43/-55/-55F, Minimum Turning Radii — 5.5° Slip Angle

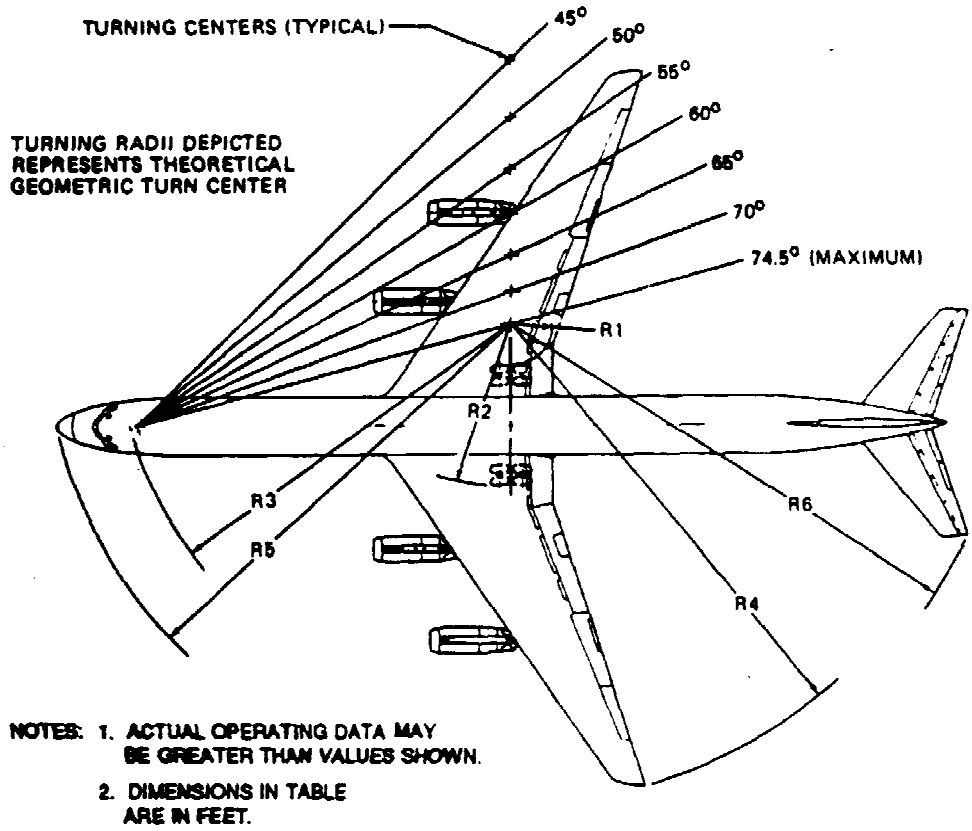

STEERING ANGLE (DEGREES)	R1	R2	R3	R4	R5	R6
30	121.9	146.6	185.0	207.0	163.5	183.8
35	98.3	123.0	136.1	183.7	144.8	163.9
40	80.0	104.7	120.4	165.6	131.4	149.3
45	65.2	88.8	109.5	151.0	121.4	138.0
50	57.7	77.4	101.0	138.8	113.7	129.2
55	41.9	66.6	94.5	128.3	107.9	122.1
60	32.4	57.1	88.4	118.9	103.6	116.2
65	23.8	48.5	85.4	110.5	100.0	111.4
70	15.9	40.5	82.4	102.9	97.5	107.4
74.5 (MAXIMUM)	9.2	33.8	80.3	96.5	95.9	104.3

Figure D—88. McDonnell Douglas DC-8-61/-61F/-71/-71F, Turning Radii — No Slip Angle

NOTES: 1. 3.7° SLIP ANGLE ASSUMED FOR 74.5° NOSE WHEEL DEFLECTION.

2. DIMENSIONS IN TABLE ARE IN FEET.

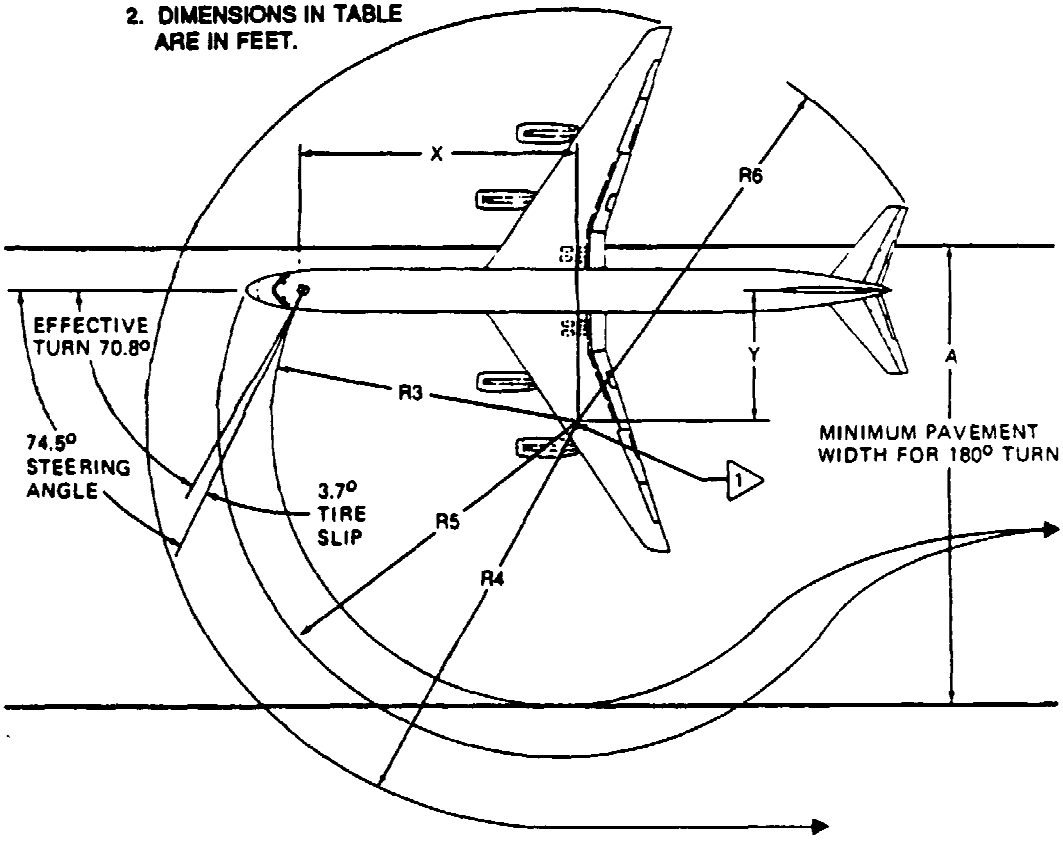

MEASUREMENTS INCLUDE DISTANCES TO OUTSIDE FACE OF NOSE AND MAIN LANDING GEAR TIRES.

1 THEORETICAL CENTER OF TURN FOR MINIMUM TURNING RADIUS. TURN INITIATED WITH AIRCRAFT IN MOTION, APPROXIMATELY IDLE THRUST ON ALL ENGINES WITH NO DIFFERENTIAL BRAKING.

X	Y	A	R3	R4	R5	R6
77.4	27.0	122.5	83.2	101.8	97.1	106.9

Figure D-89. McDonnell Douglas DC-8-61/-61F/-71/-71F, Minimum Turning Radii — 3.7° Slip Angle

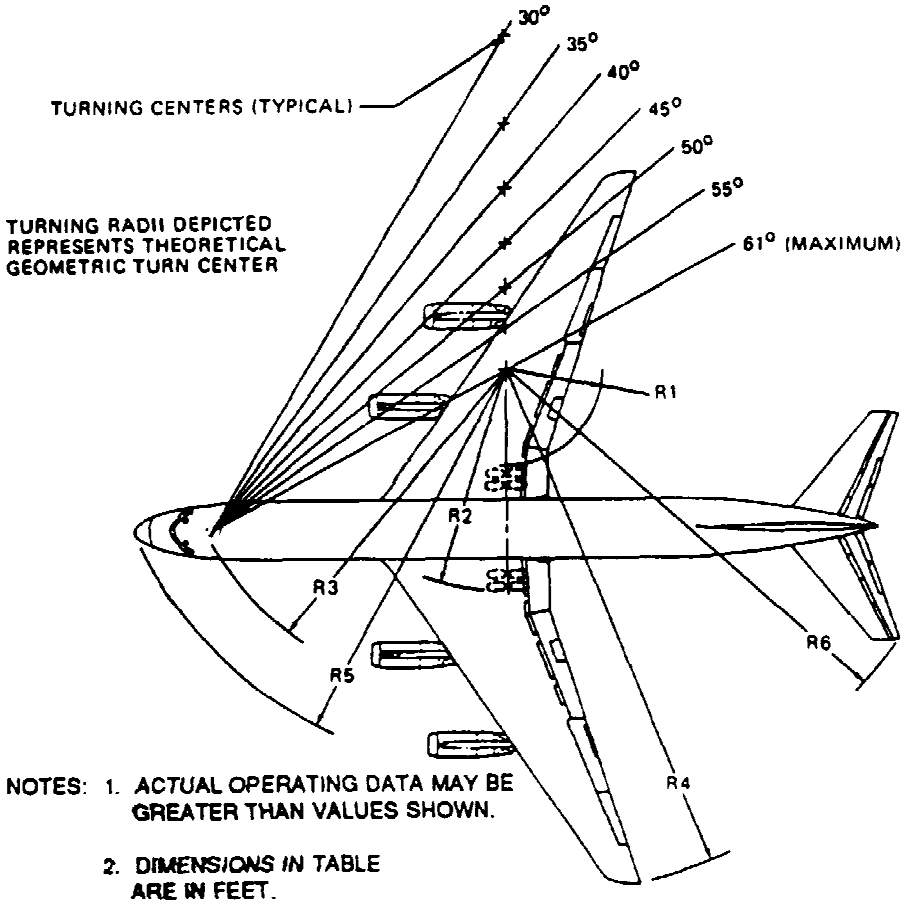

NOTES: 1. ACTUAL OPERATING DATA MAY BE GREATER THAN VALUES SHOWN.

2. DIMENSIONS IN TABLE ARE IN FEET.

STEERING ANGLE (DEGREES)	R1	R2	R3	R4	R5	R6
20	154.7	179.6	177.6	242.6	183.9	207.2
25	118.0	142.9	143.9	206.4	151.3	174.0
30	92.9	117.8	121.6	181.5	130.3	152.2
35	74.4	99.3	106.0	163.3	115.9	136.9
40	60.1	84.9	94.6	149.1	105.6	125.6
45	48.4	73.3	86.0	137.7	97.9	116.9
50	38.6	63.5	79.4	128.1	92.2	110.0
55	30.2	55.0	74.2	119.8	87.6	104.4
61 (MAXIMUM)	21.3	46.2	69.5	111.2	83.8	99.0

Figure D-90. McDonnell Douglas DC-8-62/-62F/-72/-72F, Turning Radii — No Slip Angle