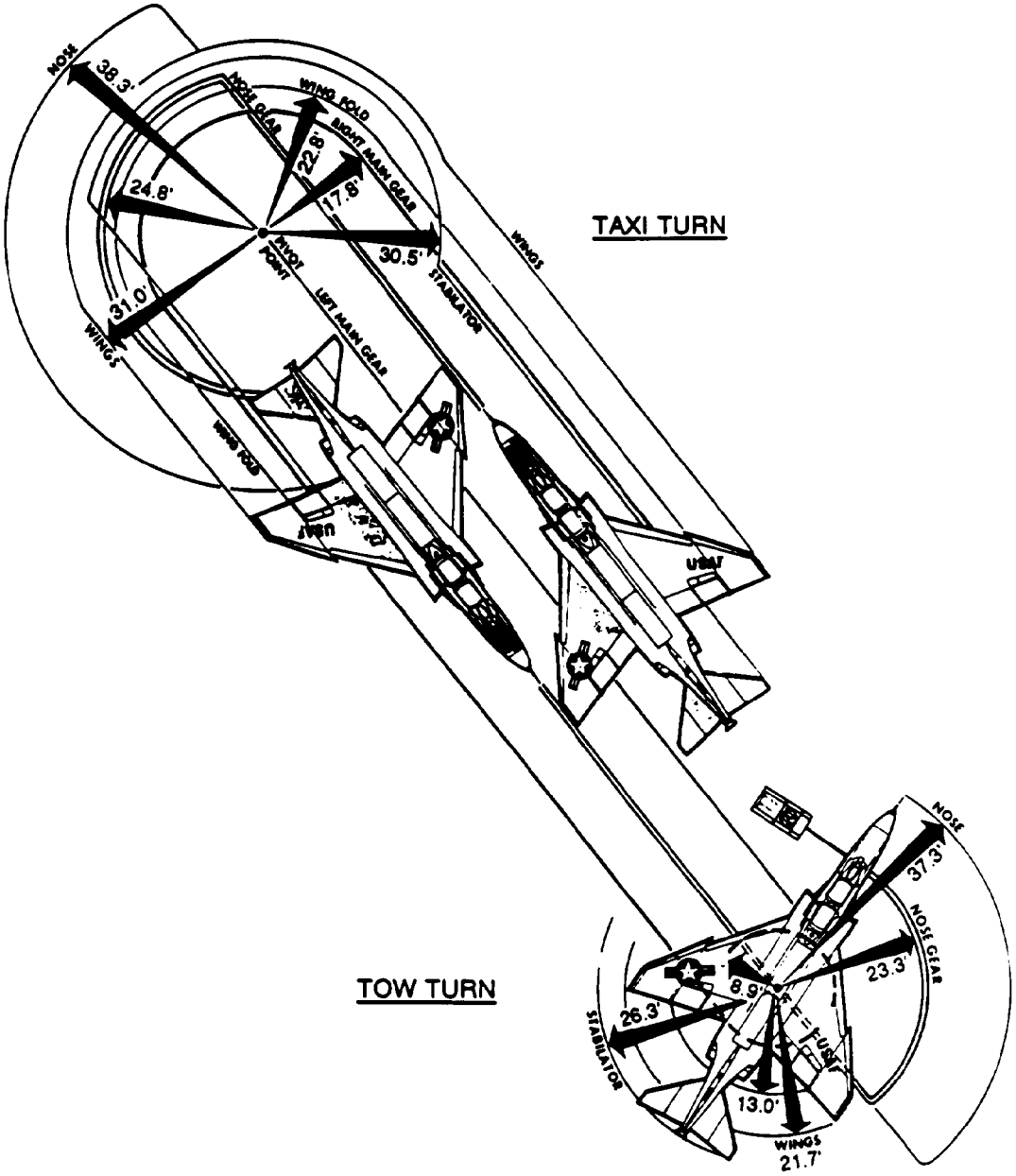

Figure D—41. F-4D/E/G, Taxi and Tow Turn Radii

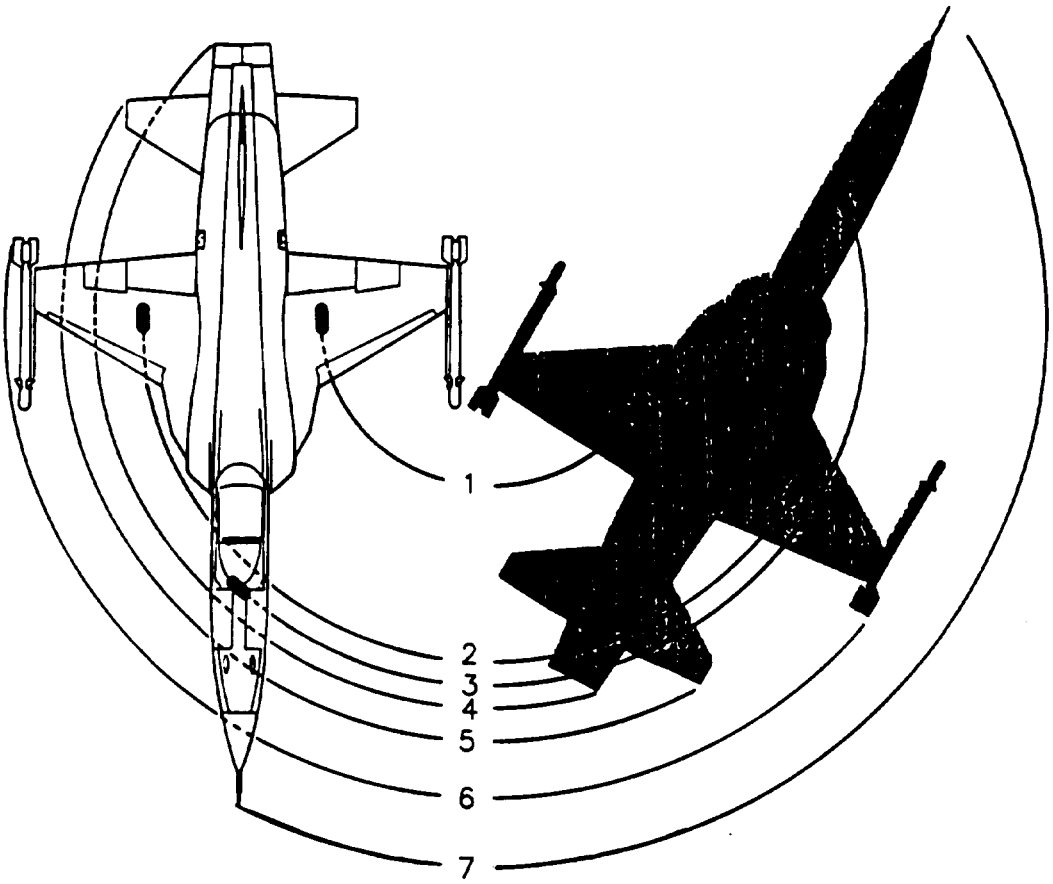

AIRCRAFT COMPONENT	TURNING RADIUS, FEET	
	F-5E	F-5F
1. LEFT MAIN GEAR	13.7	18.6
2. RIGHT MAIN GEAR	26.4	31.8
3. NOSE GEAR	26.8	31.9
4. TAILPIPE	27.8	32.8
5. HORIZONTAL TAIL	30.6	34.3
6. MISSILE FIN	34.5	39.4
7. NOSE BOOM	36.9	42.7

Figure D—42. F—5E/F, Minimum Turning Radii

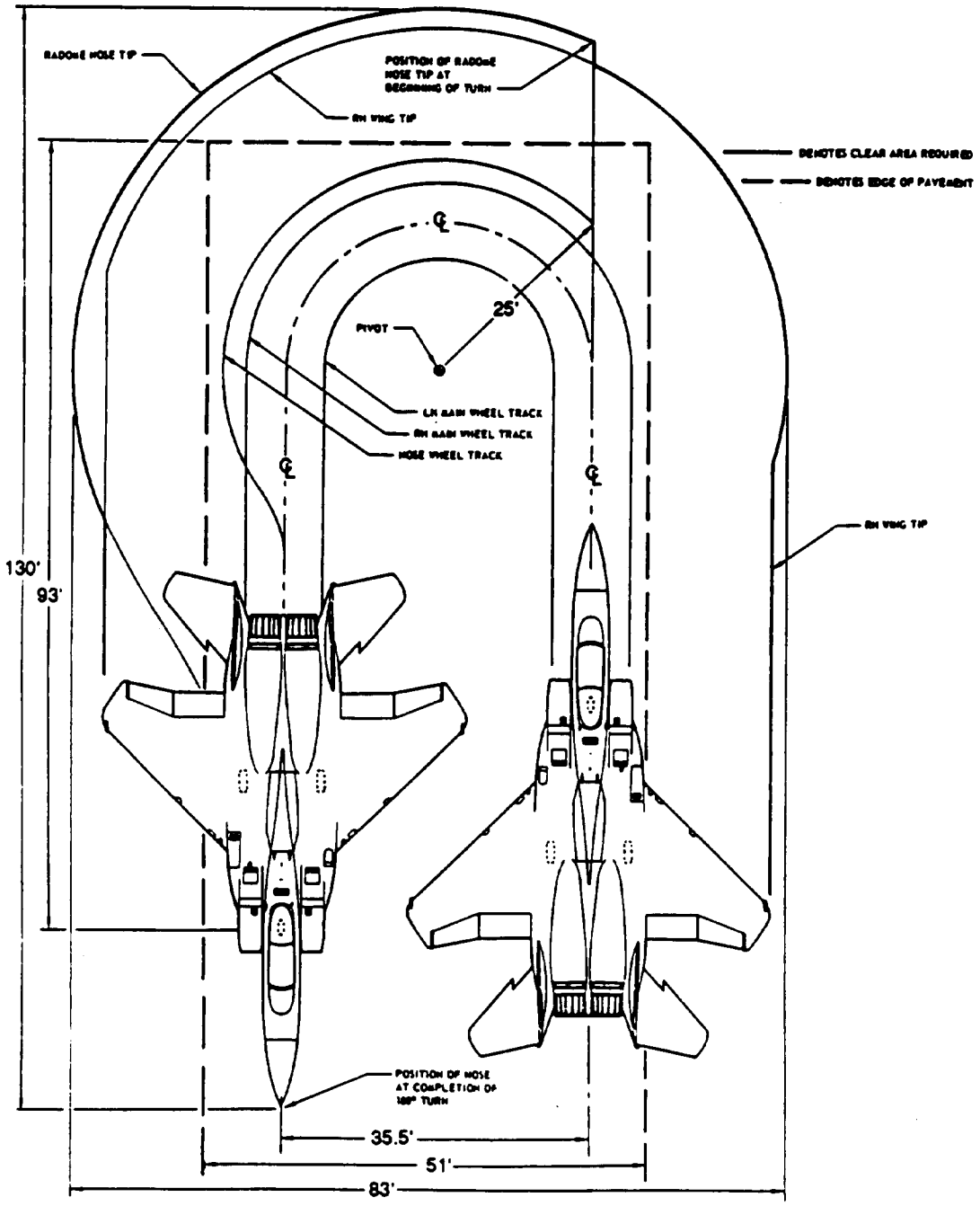

Figure D—43. F—15A/B/C/D/E, Taxi Turning Radii

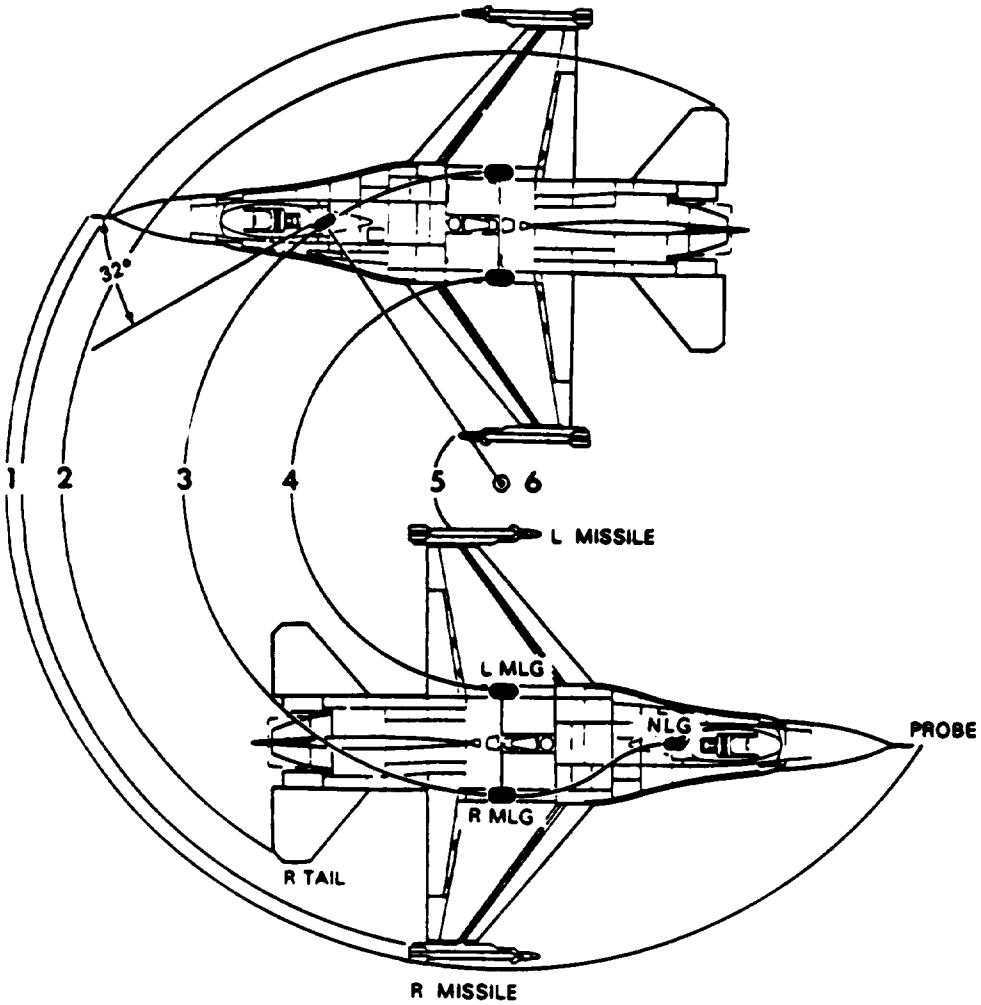

NOTE: TURN RADIUS CAN BE REDUCED TO 38 FEET BY USING INSIDE BRAKE.

1. 39 FEET
2. 35 FEET
3. 25 FEET
4. 18 FEET
5. 6 FEET
6. PIVOT POINT

Figure D-44. F—16A/B/C/D, Minimum Turning Radii

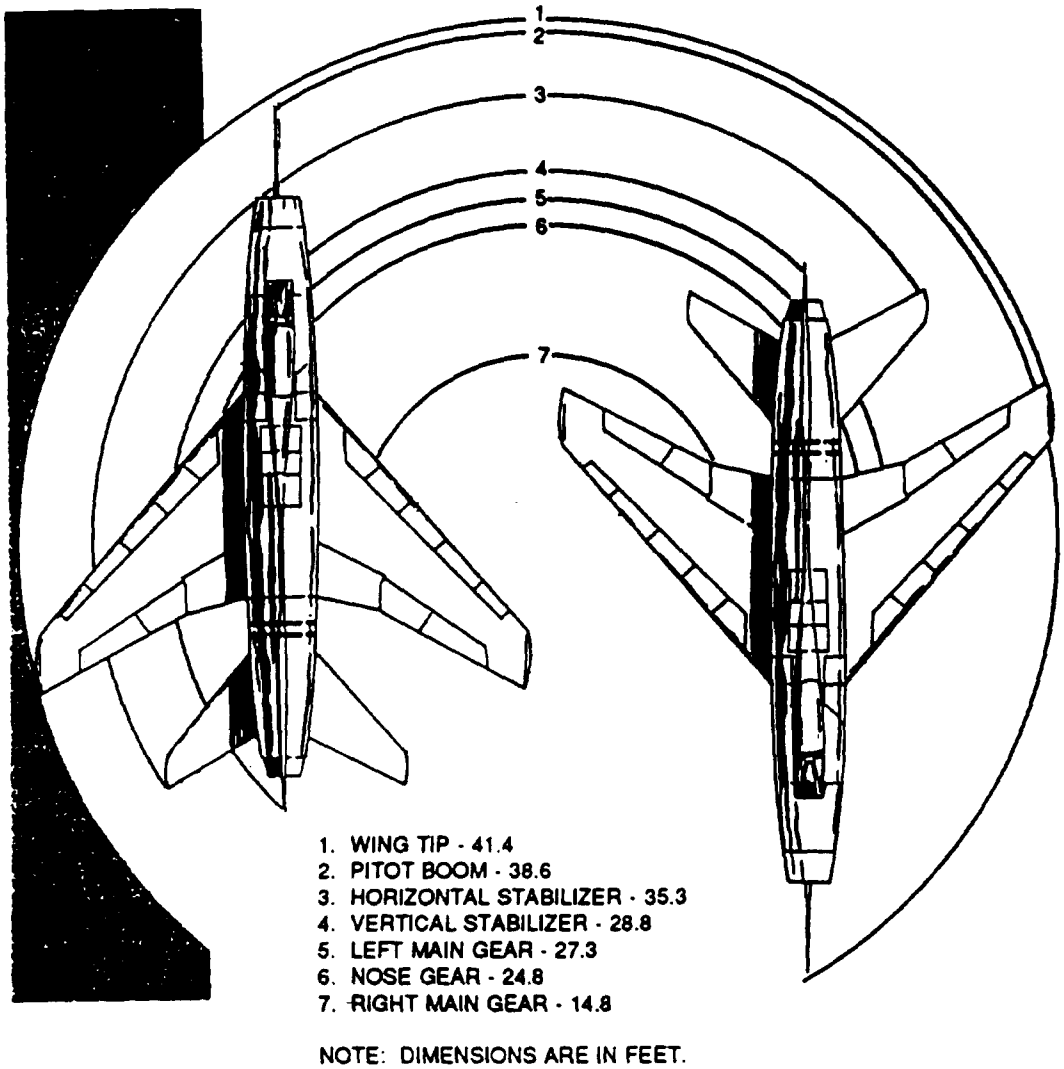

Figure D-45. F—100, Minimum Turning Radii

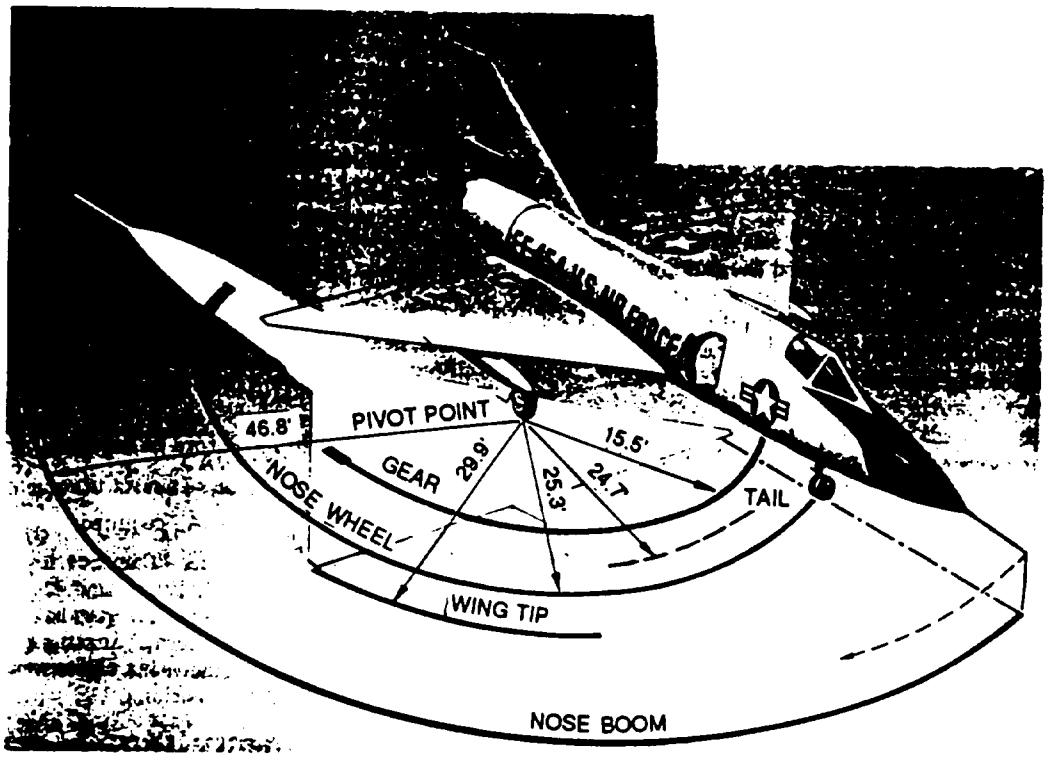

Figure D—46. F-106A/B, Minimum Turning Radii

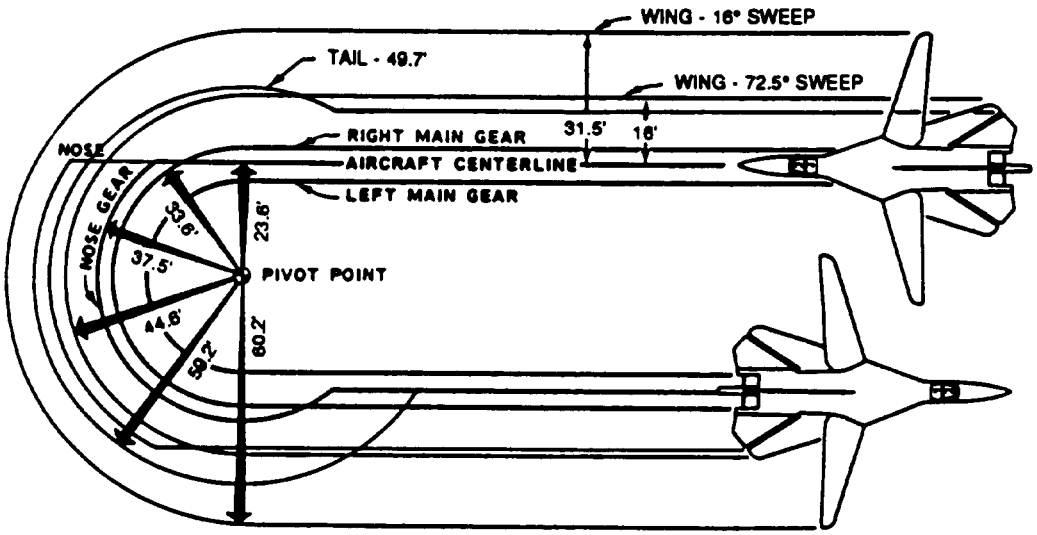

NOTES: 1. PIVOT POINT BASED ON 40 DEGREES NOSE WHEEL STEERING.

2. TURNING DISTANCES ARE BASED ON MINIMUM TAXI SPEED OF 5 KNOTS.

Figure D—47. F-111A/D/E/F, Minimum Taxi Turn Radii

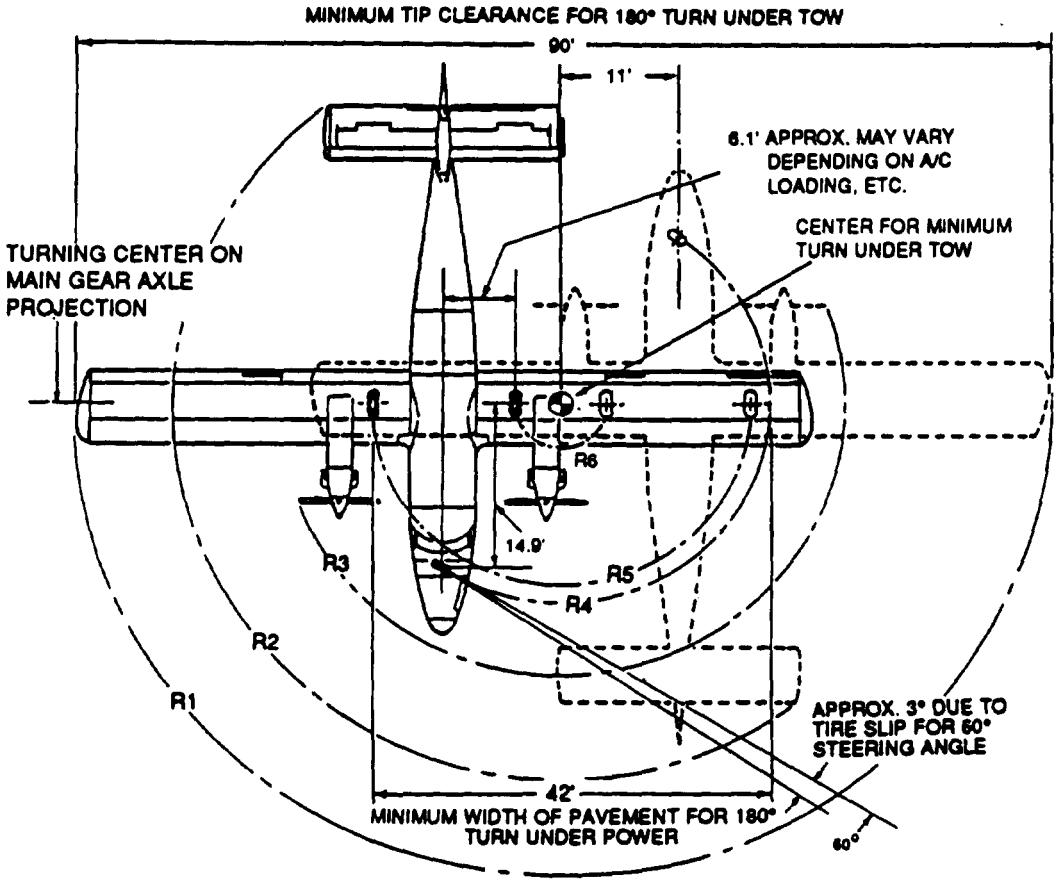

AIRCRAFT COMPONENT	TURNING RADII UNDER TOW, FEET (PIN REMOVED)	TURNING RADII UNDER POWER, FEET (NOSE WHEEL STEERING)
R1 WING TIP	45	48
R2 ELEVATOR TIP	36	39
R3 PROPELLER TIP	26	29
R4 NOSE WHEEL	19	22
R5 OUTER WHEEL	17	20
R6 INNER WHEEL	4	7

Figure D-48. DeHavilland Canada DHC-6,
Minimum Turning Radii

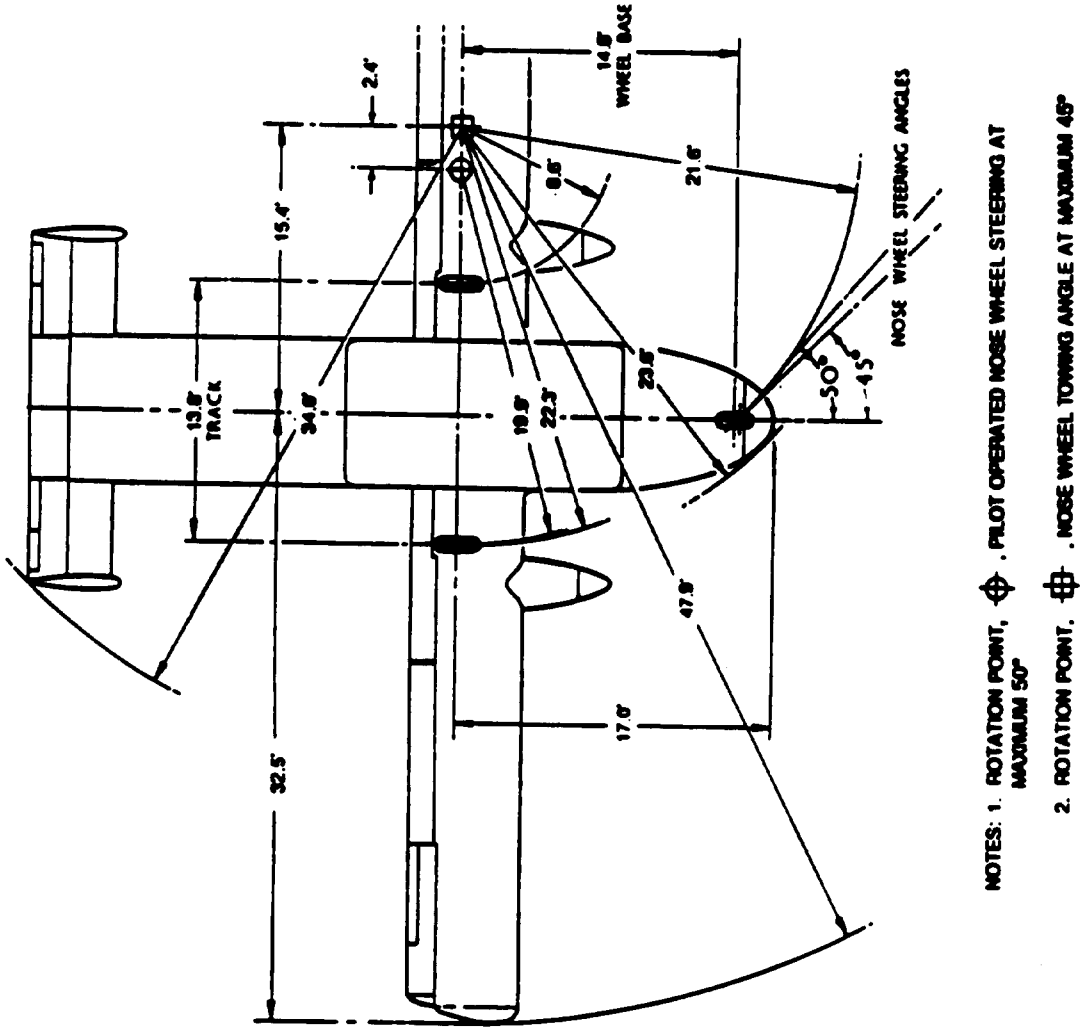

Figure D—49. Short Brothers SC.7 and SC.7-3M,
Minimum Turning Radii

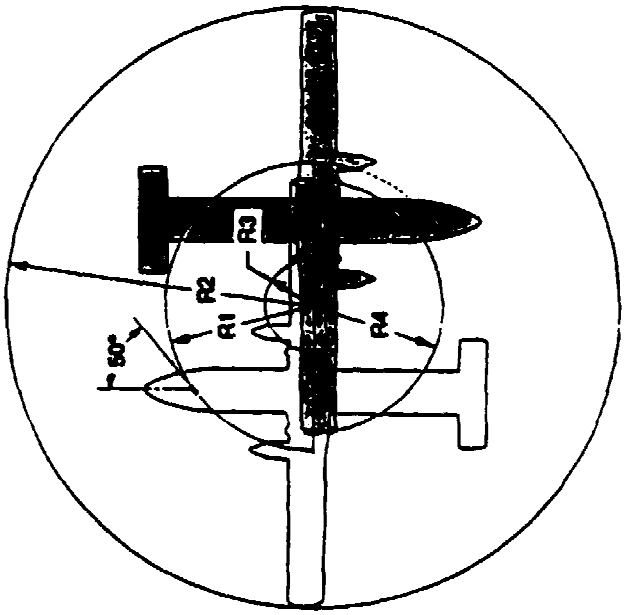

MINIMUM TAXIING RADIUS, FEET

R1	28.8
R2	53.8
R3	9.5
R4	23.5

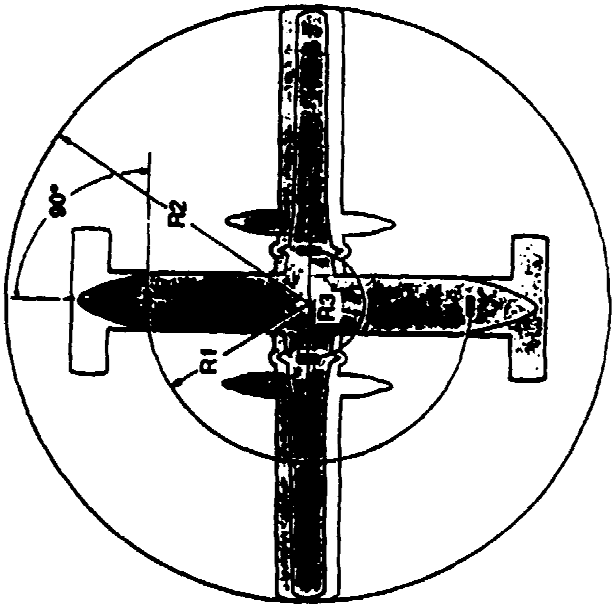

MINIMUM TOWING RADIUS, FEET

R1	21.2
R2	37.3
R3	6.9

Figure D—50. Short Brothers 330 and 330—200,
Minimum Turning Radii

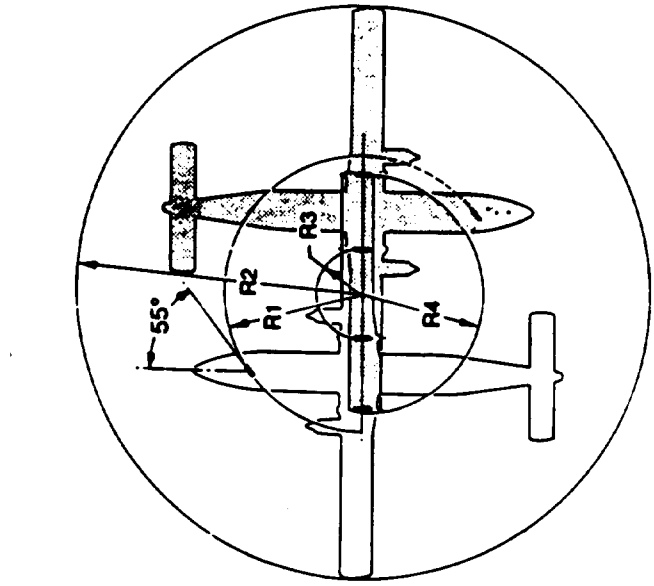

MINIMUM TAXIING RADIUS, FEET

R1	29.8
R2	53.8
R3	9.5
R4	23.5

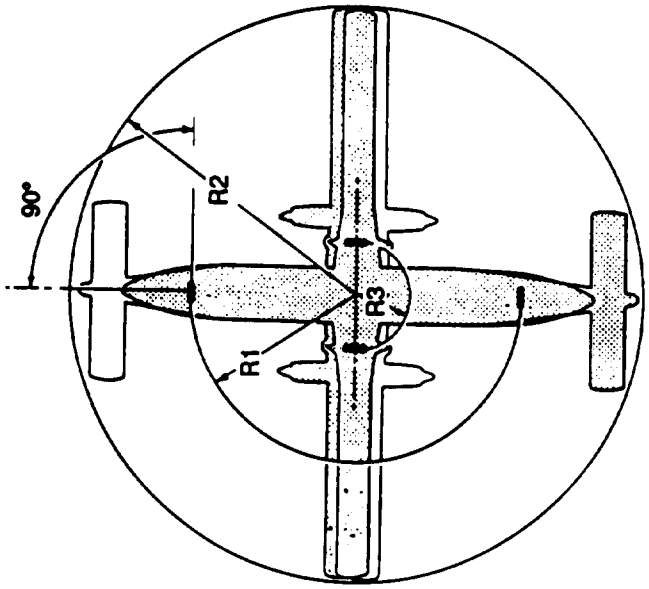

MINIMUM TOWING RADIUS, FEET

R1	24.2
R2	37.3
R3	6.9

Figure D—51. Short Brothers 360,
Minimum Turning Radii

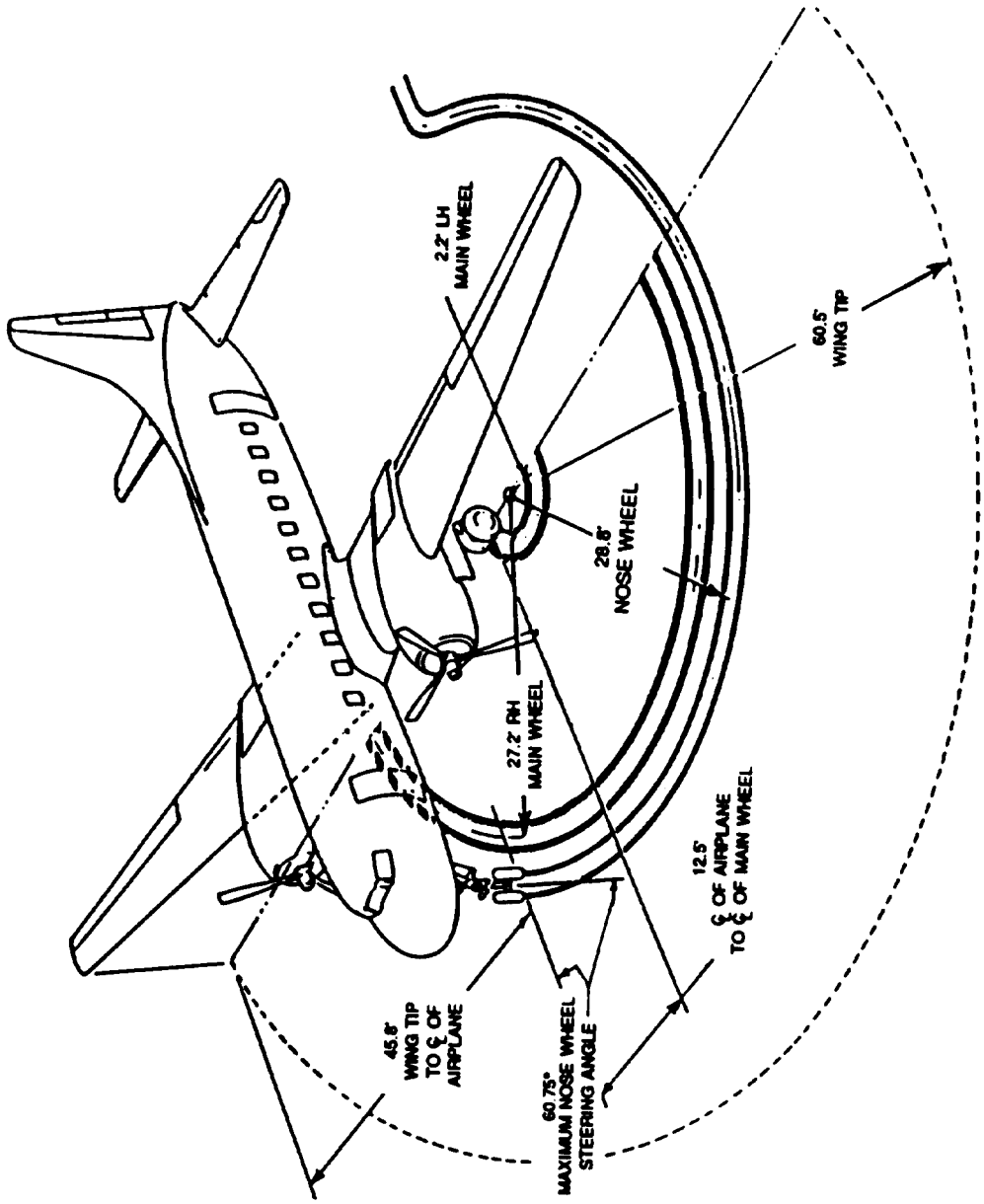

Figure D-52. Convair 240/600,
Minimum Turning Radii

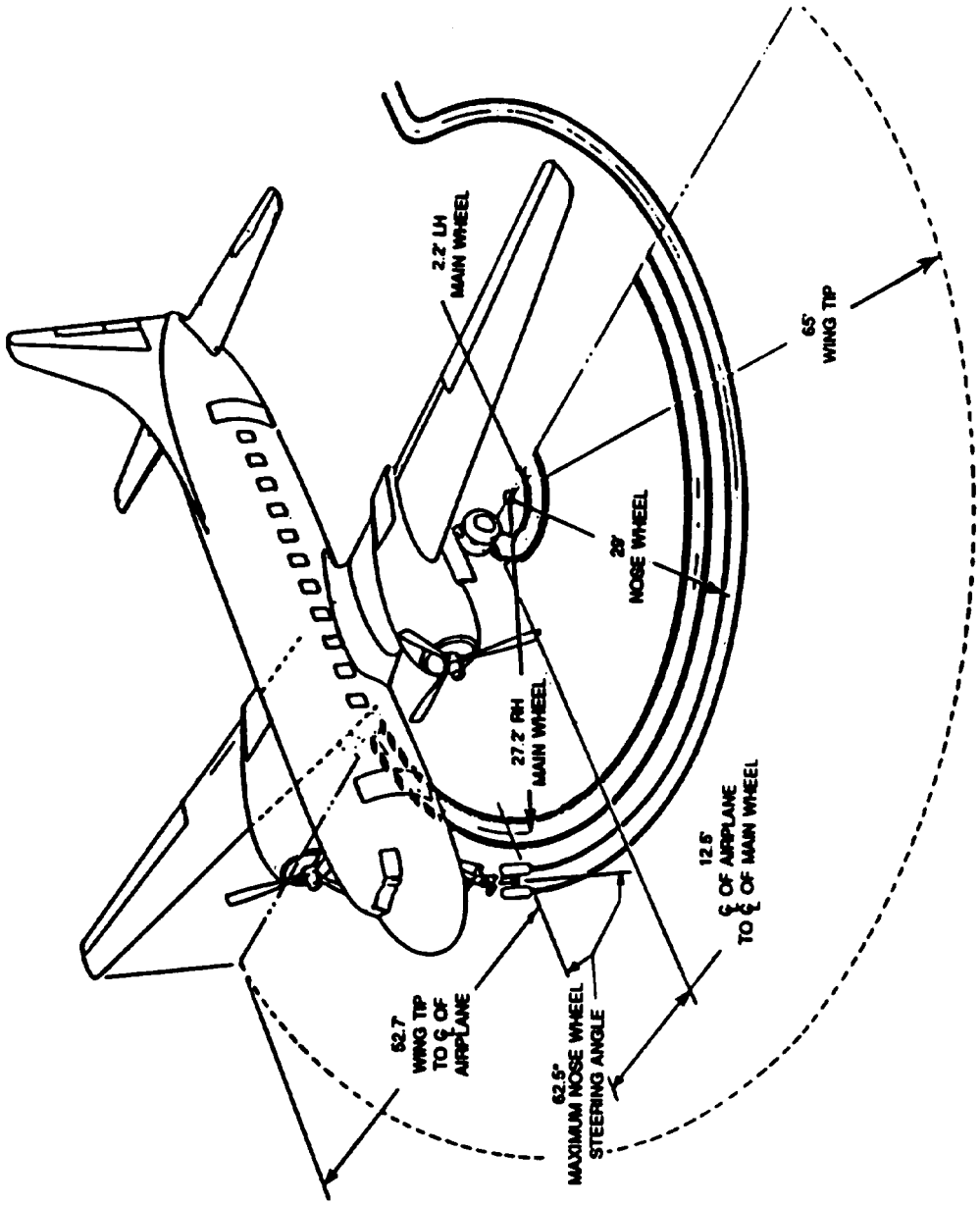

Figure D—53. Convair 340/440/580/640,
Minimum Turning Radii

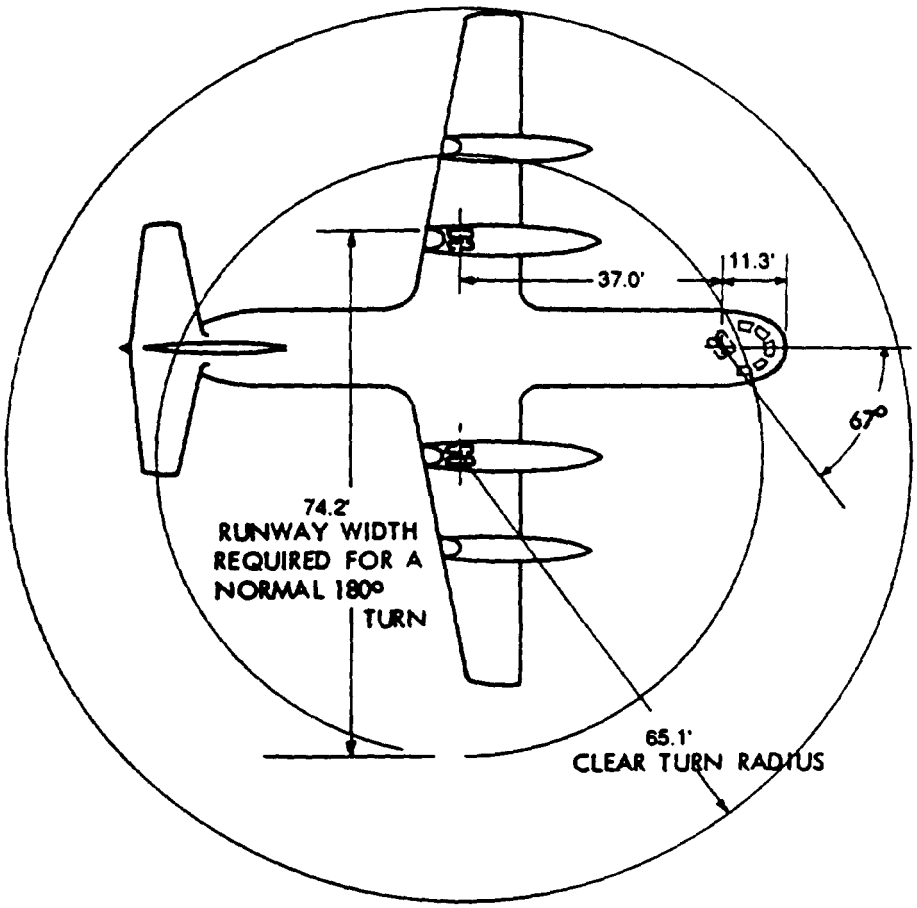

NOTE: AIRCRAFT CAN PIVOT ABOUT ONE MAIN GEAR WITH MAXIMUM NOSE STEERING OF 67 DEGREES.

Figure D—54. Lockheed L-188,
Minimum Turning Radii

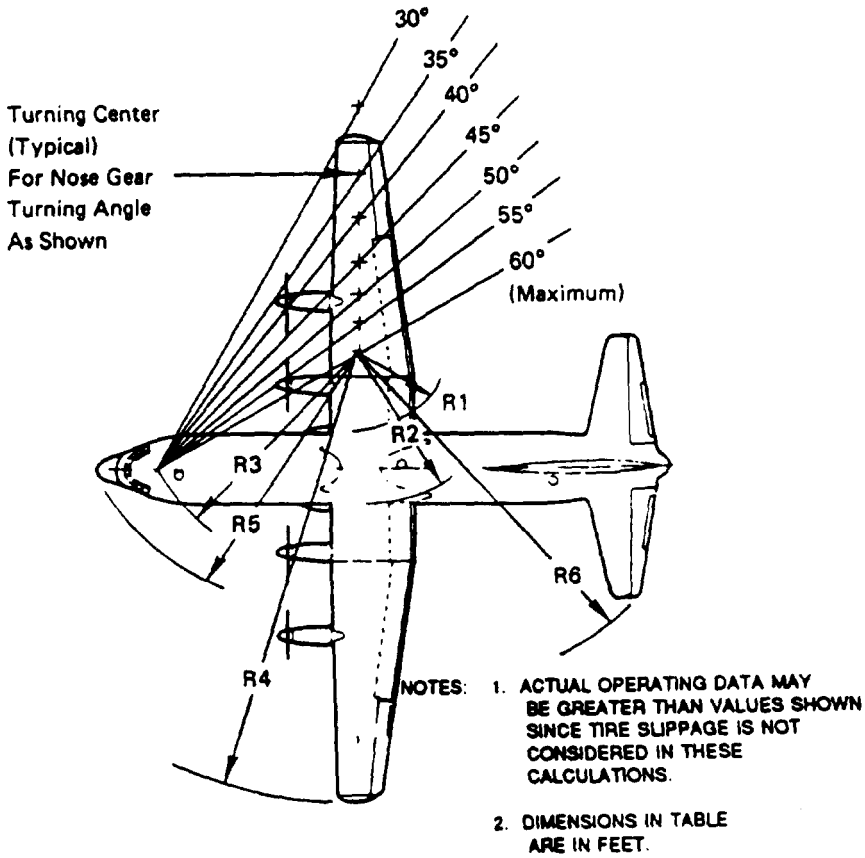

STEERING ANGLE (DEGREES)	W*	R1	R2	R3	R4	R5	R6
	PVT. WIDTH	INNER GEAR	OUTER GEAR	NOSE GEAR	WING TIP	NOSE	TAIL
30	158	63	77	81	136	88	111
35	135	51	65	71	124	78	100
40	108	41	56	63	114	71	92
45	105	33	48	57	107	66	86
50	94	27	41	53	101	62	81
55	85	21	35	50	95	59	77
60 (MAXIMUM)	77	16	30	47	90	57	74

*W = MINIMUM PAVEMENT WIDTH FOR 180° TURN.

Figure D-55. Lockheed L—382 (L—lOO—20 and L-100-30), Turning Radii — No Tire Slippage

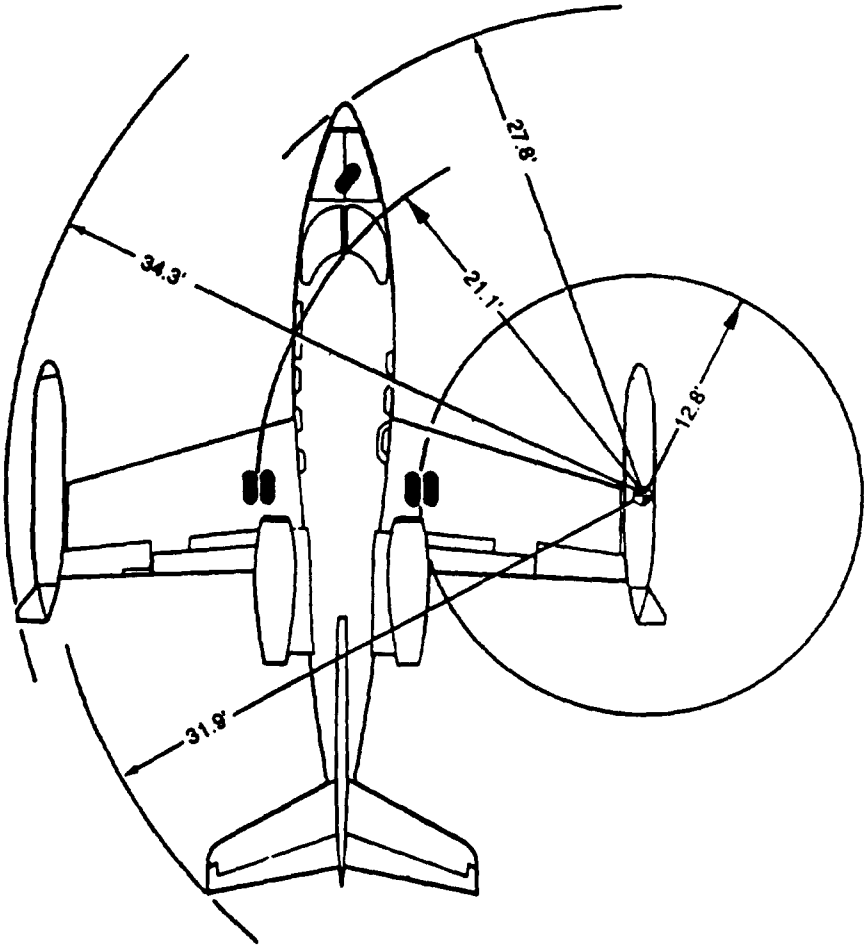

NOTE: RADII REFLECT NORMAL NOSE WHEEL STEERING.

Figure D—56. Gates Learjet 24, Minimum Turning Radii

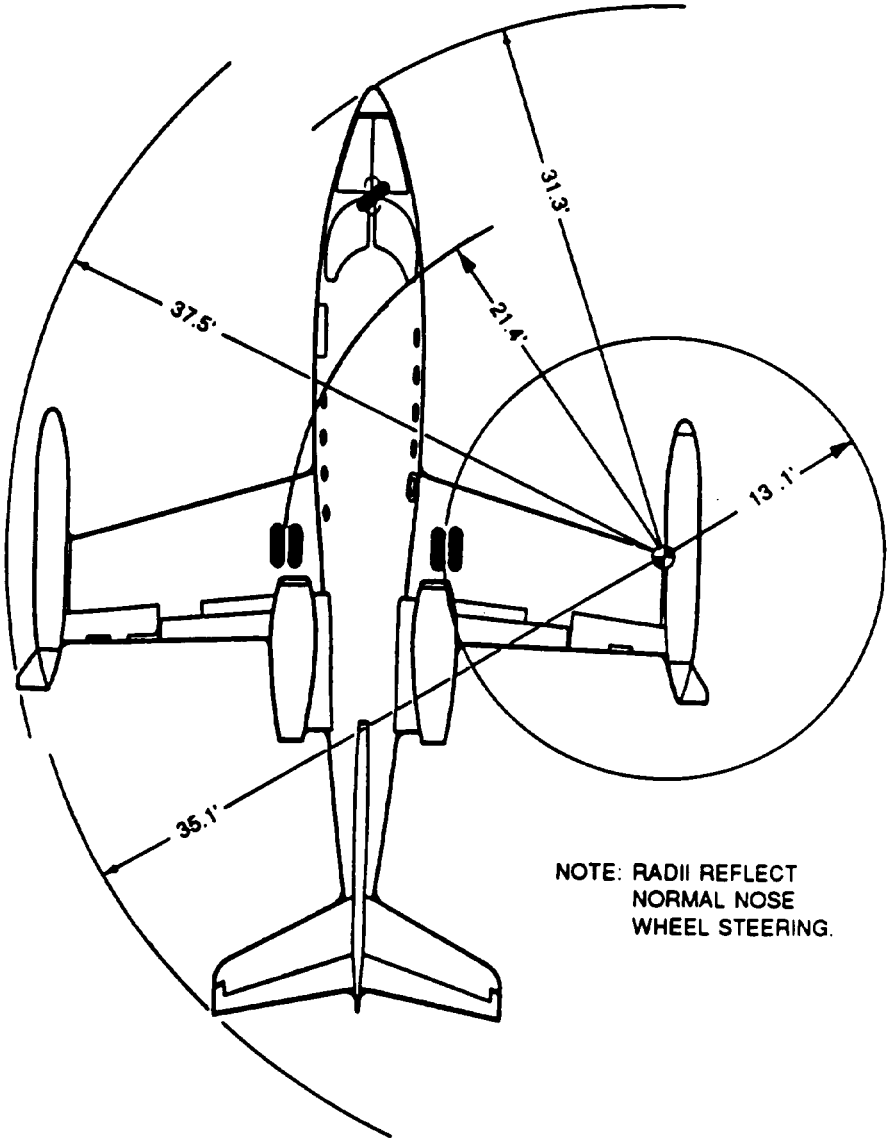

Figure D—57. Gates Learjet 25, Minimum Turning Radii

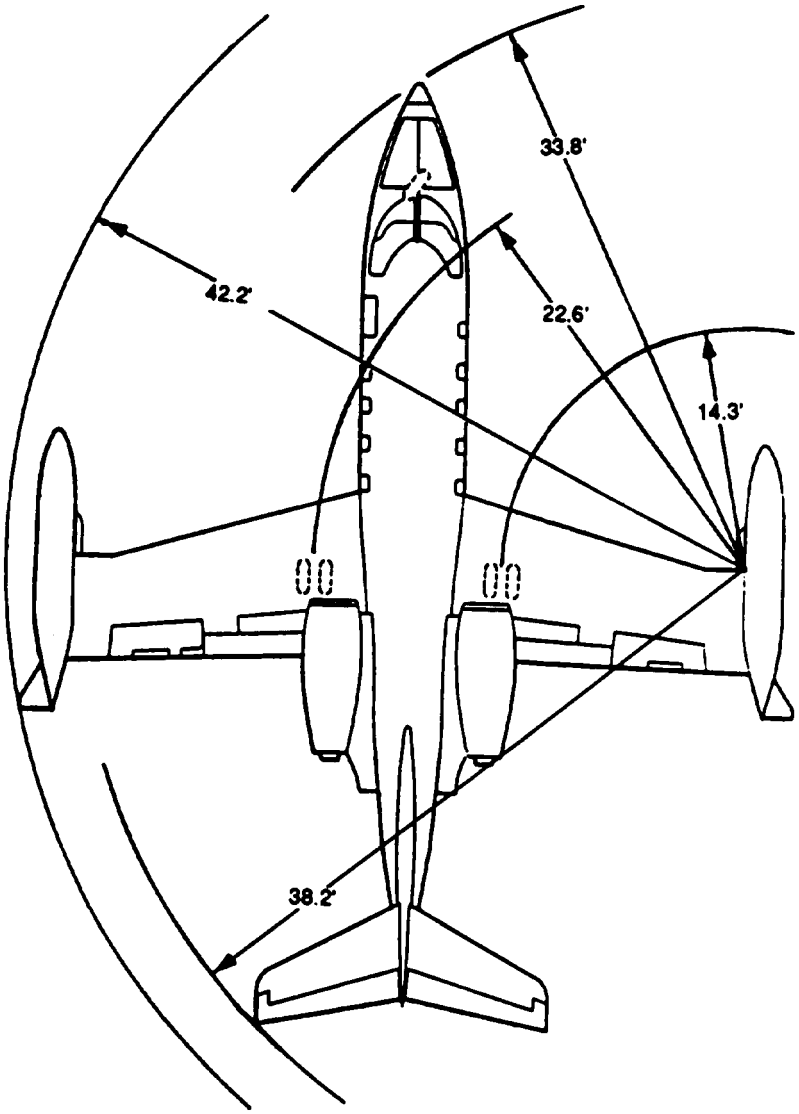

NOTE: RADII REFLECT NORMAL NOSE WHEEL STEERING.

Figure D—58. Gates Learjet 35 and 36,
Minimum Turning Radii

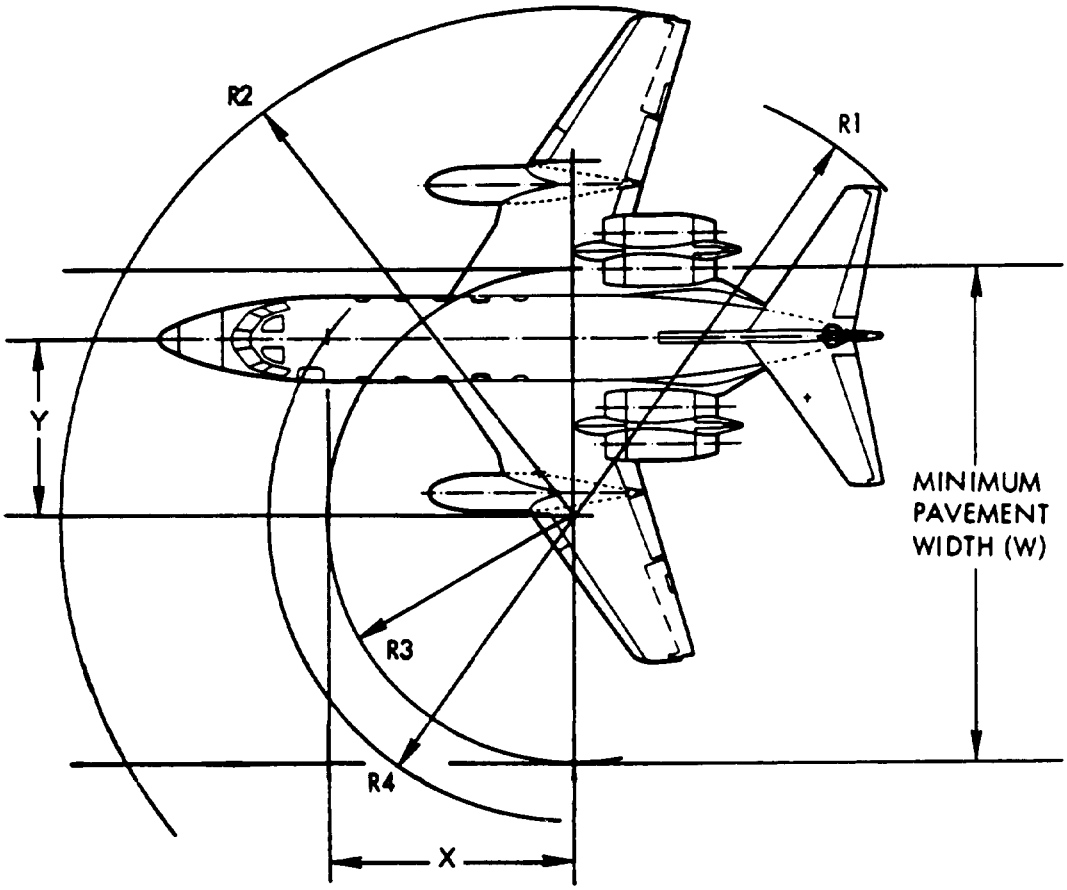

TURN ANGLE	X	Y	R1	R2	R3	R4	W
53°	20.6	15.5	37.1	43.3	21.8	25.8	34.0

NOTE: DIMENSIONS ARE IN FEET.

Figure D-59. Lockheed 1329, Minimum Turning Radii

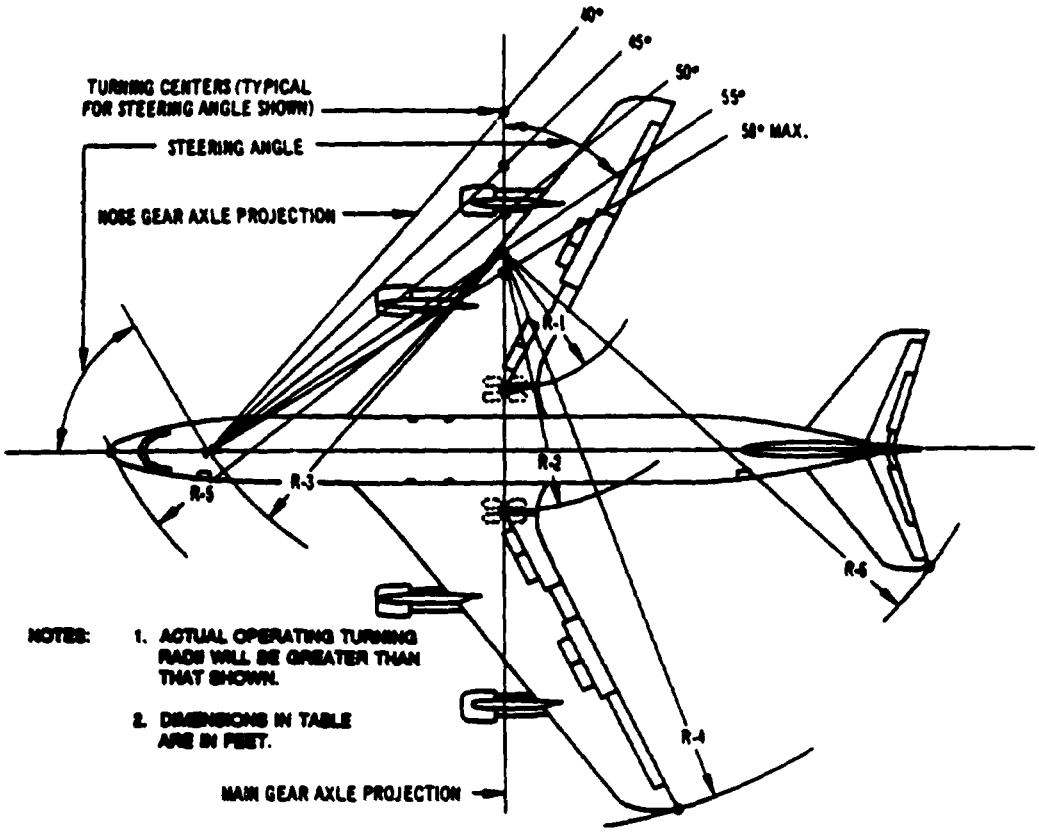

STEERING ANGLE (DEGREES)	R-1	R-2	R-3	R-4	R-5	R-6
	INNER GEAR	OUTER GEAR	NOSE GEAR	WING TIP	NOSE	TAIL
30	80	102	105	159	114	136
35	64	86	91	143	102	123
40	51	73	82	132	94	113
45	41	63	74	122	87	105
50	33	55	69	113	82	100
55	26	46	65	107	79	95
58 (MAXIMUM)	22	44	63	103	77	90

Figure D-60. Boeing 707—1203, Turning Radii — No Slip Angle

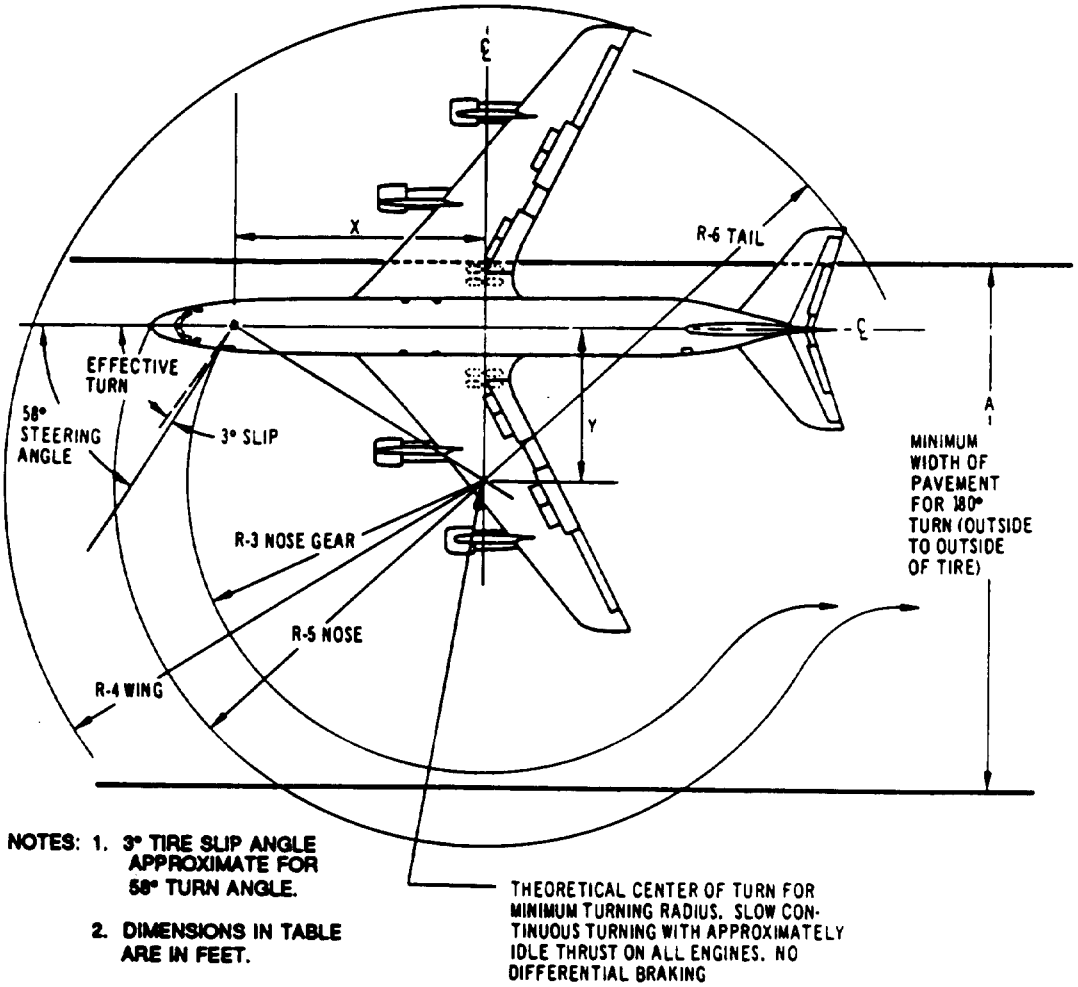

NOTES: 1. 3° TIRE SLIP ANGLE APPROXIMATE FOR 58° TURN ANGLE.

2. DIMENSIONS IN TABLE ARE IN FEET.

FOR EFFECTIVE TURN ANGLE OF 55°						
X	Y	A	R-3	R-4	R-5	R-6
52.3	36.6	116.2	65.0	107.0	79.0	95.0

Figure D—61. Boeing 707—120B, Minimum Turning Radii — 3° Slip Angle

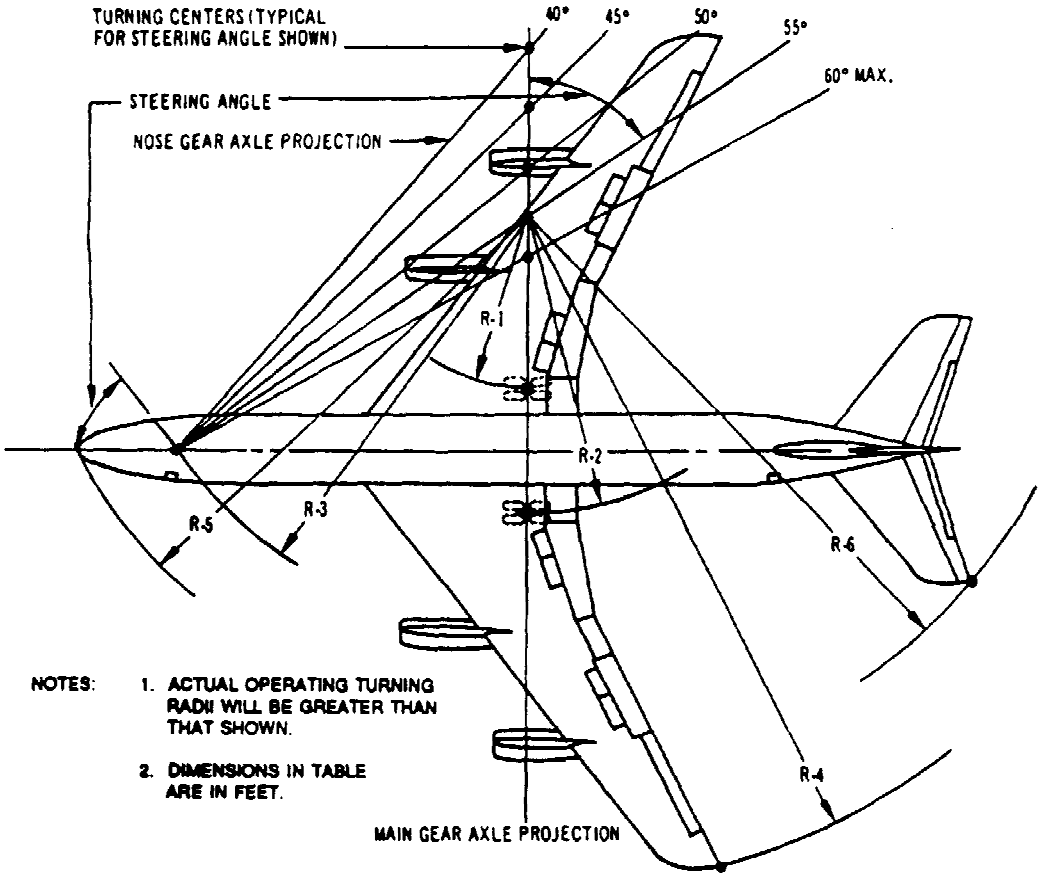

NOTES:
1. ACTUAL OPERATING TURNING RADII WILL BE GREATER THAN THAT SHOWN.
2. DIMENSIONS IN TABLE ARE IN FEET.

STEERING ANGLE (DEGREES)	R-1	R-2	R-3	R-4	R-5	R-6
	INNER GEAR	OUTER GEAR	NOSE GEAR	WING TIP*	NOSE	TAIL
30	91	113	118	177	127	147
35	74	96	103	159	114	132
40	60	82	92	145	104	121
45	48	70	84	134	97	112
50	39	61	77	125	91	106
55	30	52	71	117	87	100
60 (MAXIMUM)	23	45	68	110	84	96

*ADD 2 FEET FOR -320B AND -320C

Figure D–62. Boeing 707–320/–320B/–3200/–420, Turning Radii – No Slip Angle

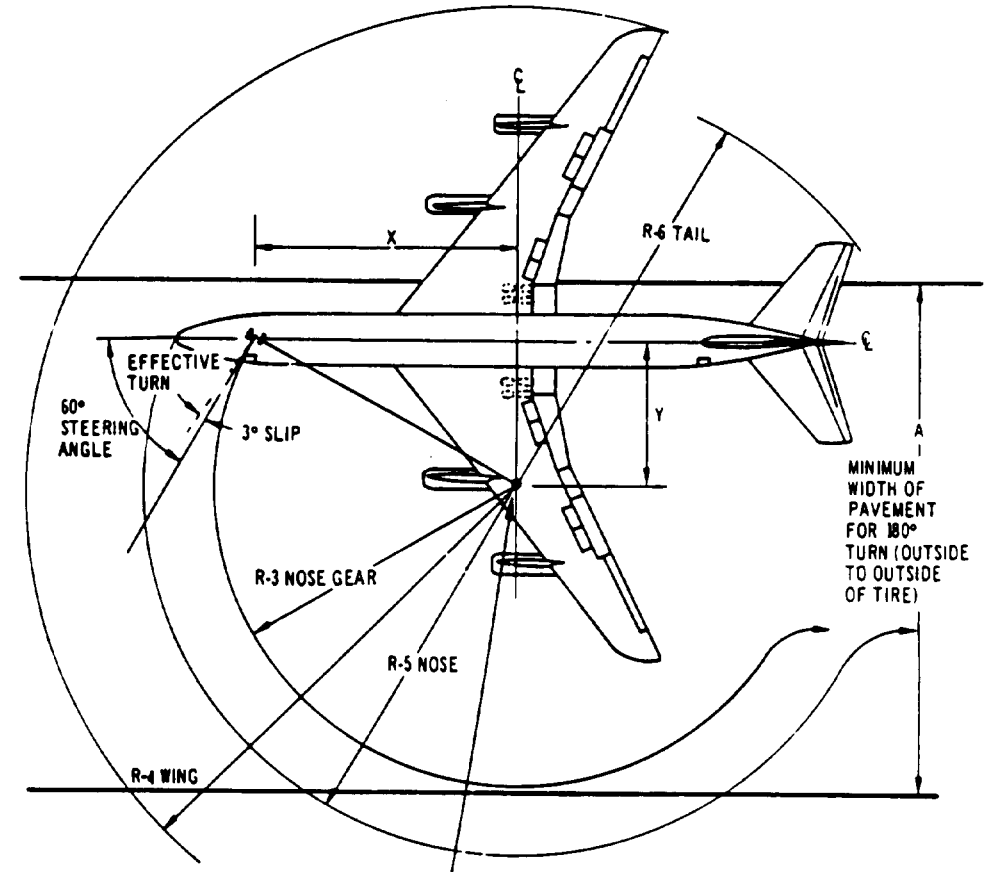

NOTES: 1. 3° TIRE SLIP ANGLE APPROXIMATE FOR 60° TURN ANGLE.

2. DIMENSIONS IN TABLE ARE IN FEET.

FOR EFFECTIVE TURN ANGLE OF 57°						
X	Y	A	R-3	R-4*	R-5	R-6
59.0	38.3	123.4	70.5	114.0	85.5	98.0

*ADD 2 FEET FOR -320B AND - 320C

Figure D-63. Boeing 707-302/-320B/-320C/-420, Minimum Turning Radii - 3° Slip Angle

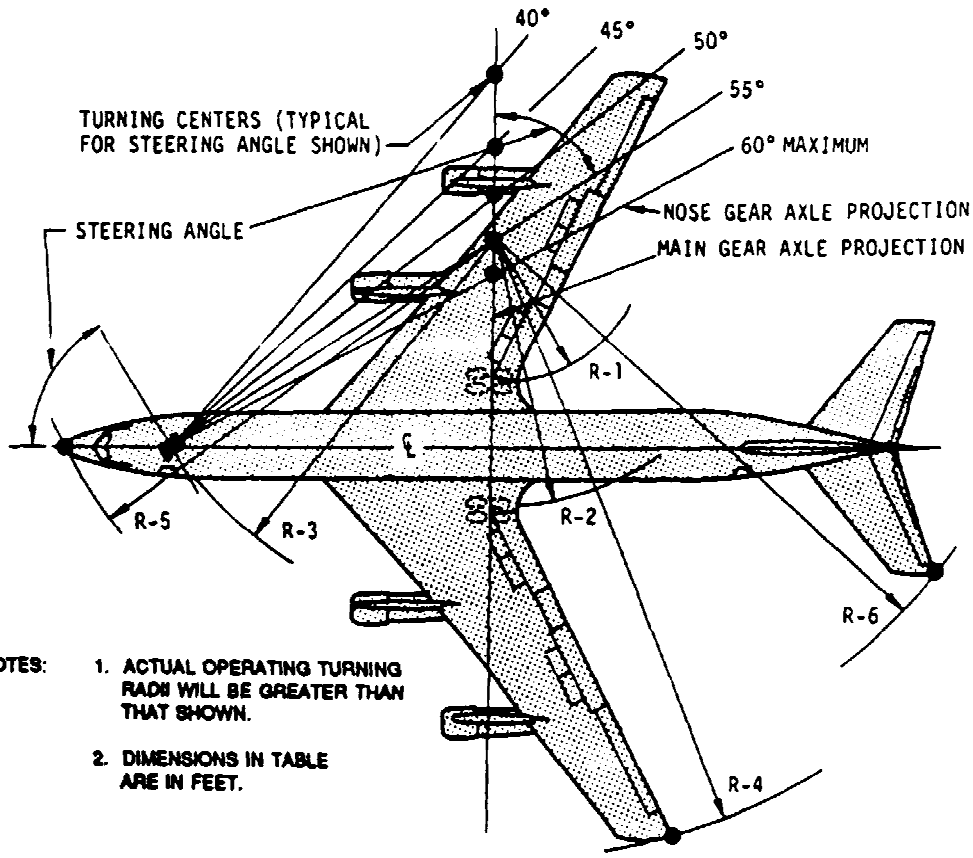

STEERING ANGLE (DEGREES)	R-1	R-2	R-3	R-4	R-5	R-6
	INNER GEAR	OUTER GEAR	NOSE GEAR	WING TIP	NOSE	TAIL
30	77	99	102	157	112	130
35	62	84	89	142	100	117
40	50	72	79	129	91	107
45	40	62	72	120	85	100
50	32	54	66	112	80	94
55	25	47	62	105	77	90
60 (MAXIMUM)	18	40	59	99	74	86

Figure D-64. Boeing 720 and 720B,
Turning Radii - No Slip Angle

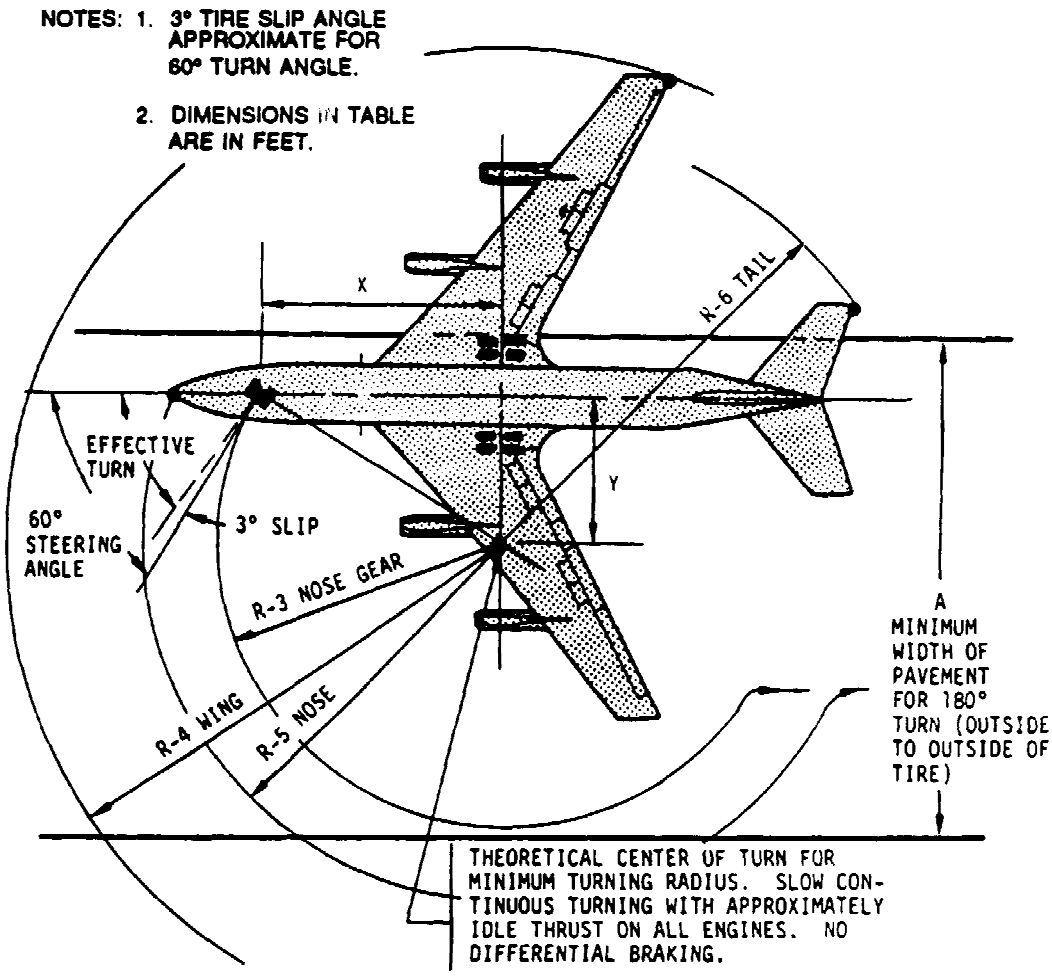

FOR EFFECTIVE TURN ANGLE OF 57°						
X	Y	A	R-3	R-4	R-5	R-6
50.6	32.8	107.7	60.4	102.4	75.4	88.0

Figure D—65. Boeing 720 and 720B, Minimum Turning Radii — 3° Slip Angle