ARMY TM 5-810-2
AIR FORCE JOINT MANUAL 32-1057
(FORMERLY AFR 88-28)

31 DECEMBER 1991

HIGH TEMPERATURE WATER HEATING SYSTEMS

THIS COVER PAGE OFFICIALLY CHANGES THE AIR FORCE PUBLICATION NUMBER FROM AFR 88-28 TO AFJMAN 32-1057

(Affix to the front of the publication)

DEPARTMENTS OF THE ARMY AND THE AIR FORCE

Information Handling Services, 2000

ARMY TM 5-810-2
AIR FORCE AFR 88-28

HIGH TEMPERATURE WATER HEATING SYSTEMS

APPROVED FOR PUBLIC RELEASE; DISTRIBUTION IS UNLIMITED

DEPARTMENTS OF THE ARMY AND THE AIR FORCE
DECEMBER 1991

Information Handling Services, 2000

REPRODUCTION AUTHORIZATION/RESTRICTIONS

This manual has been prepared by or for the Government and, except to the extent indicated below, is public property and not subject to copyright.

Copyrighted material included in the manual has been used with the knowledge and permission of the proprietors and is acknowledged as such at point of use. Anyone wishing to make further use of any copyrighted material, by itself and apart from this text, should seek necessary permission directly from the proprietors.

Reprint or republications of this manual should include a credit substantially as follows: "Joint Departments of the Army and Air Force, TM 5-810-2/AFR 88-28".

If the reprint or republication includes copyrighted material, the credit should also state: "Anyone wishing to make further use of copyrighted material, by itself and apart from this text, should seek necessary permission directly from the proprietor.".

TECHNICAL MANUAL
No. 5-810-2
AIR FORCE REGULATION
No. 88-28

HEADQUARTERS
DEPARTMENTS OF THE ARMY
AND THE AIR FORCE
Washington, DC, *31 December 1991*

HIGH TEMPERATURE WATER HEATING SYSTEMS

Approved for public release; distribution is unlimited

		Paragraph	Page
CHAPTER 1.	DESIGN CONSIDERATIONS		
	Purpose	1-1	1-1
	Scope	1-2	1-1
	References	1-3	1-1
	General	1-4	1-1
	Advantages of HTW systems	1-5	1-1
	Properties of high temperature water	1-6	1-2
	Pressurization	1-7	1-3
	Water circulation	1-8	1-4
	HTW generators	1-9	1-12
	Design and selection procedure	1-10	1-12
	Economic justification	1-11	1-18
CHAPTER 2.	LOAD CHARACTERISTICS AND CALCULATIONS		
	HTW requirements	2-1	2-1
	Space heating	2-2	2-1
	Process heating	2-3	2-1
	Diversity factors	2-4	2-2
	Operating temperatures and pressures	2-5	2-2
	Maximum initial load	2-6	2-3
	Maximum ultimate load	2-7	2-3
	Essential load	2-8	2-3
	Matching plant capacity to load	2-9	2-4
	System heat loss	2-10	2-4
	Flywheel factor	2-11	2-4
	Calculations	2-12	2-4
CHAPTER 3.	DISTRIBUTION PIPING AND EQUIPMENT		
	Design of system	3-1	3-1
	Pipe sizing	3-2	3-1
	Distribution piping	3-3	3-1
	Underground and aboveground systems	3-4	3-4
CHAPTER 4.	HEATING PLANT		
	Introduction	4-1	4-1
	HTW generators	4-2	4-1
	Combustion equipment and controls	4-3	4-3
	Pressurization system	4-4	4-5
	Pumps	4-5	4-6
	Makeup water treatment	4-6	4-7
	Instrumentation	4-7	4-8
	Pollution control	4-8	4-9
CHAPTER 5.	CONVERSION AND UTILIZATION		
	Potential users of the system	5-1	5-1
	Building service	5-2	5-1
	Location of equipment	5-3	5-1
	Design of heat exchangers	5-4	5-5
	Controls	5-5	5-6
APPENDIX A.	REFERENCES		A-1
APPENDIX B.	SAMPLE CALCULATIONS FOR DATA GIVEN IN CHAPTER 2		B-1
APPENDIX C.	EXAMPLE DISTRIBUTION LAYOUTS		C-1

*This manual supersedes TM 5-810-2/AFM 88-28, dated 12 September 1984

Information Handling Services, 2000

LIST OF FIGURES

Figure	Title	Page
1-1.	Inert Gas-Pressurized Single Circulation Method	1-5
1-2.	Inert Gas-Pressurized Dual Circulation Method	1-7
1-3.	Steam-Pressurized Single Circulation Method	1-9
1-4.	Steam-Pressurized Dual Circulation Method	1-11
1-5.	Flow Diagram-Steam-Pressurized Single Circulation System	1-14
1-6.	Flow Diagram-Steam-Pressurized Dual Circulation System	1-15
1-7.	Flow Diagram Inert Gas Pressurized Single Circulation System	1-16
1-8.	Flow Diagram Inert Gas Pressurized Dual Circulation System	1-17
1-9.	Inert Gas Pressurization Using Variable Gas Quantity with Gas Recovery	1-18
2-1.	Expansion Tank Volumes	2-6
3-1.	Typical Vent and Typical Drain	3-3
4-1.	Cascade HTW System in Process Steam System	4-2
4-2.	Typical Combustion Control Systems	4-4
5-1.	Various Heat Converters	5-2
5-2.	Heat Exchangers and Control Valves	5-4
C-1.	Direct Supply, Reverse—Return	C-1
C-2.	Direct Supply, Radial	C-2
C-3.	One—Pipe Loop Main	C-3
C-4.	Primary and Secondary Systems	C-4

LIST OF TABLES

Table	Title	Page
2-1.	Influence of Temperature Differentials on Selection of Pump Sizes for HTW Systems	2-3

Information Handling Services, 2000

CHAPTER 1

DESIGN CONSIDERATIONS

1-1. PURPOSE

This manual provides guidance for the design of high temperature water (HTW) heating systems classified as operating with supply water temperature above 240 degrees F. and designed to a pressure rating of 300 psi.

1-2. SCOPE

This manual presents the unique features of HTW systems, factors for comparison with other heat distribution mediums, and criteria to design or modify HTW systems.

1-3. REFERENCES

Appendix A contains a list of references used in this manual.

1-4. GENERAL

In district and area heating systems, water is generally circulated at temperatures from 320 to 440 degrees F., corresponding to a saturated pressure range from 75 to 367 psig. The usual practical temperature limit is 440 degrees F. because of pressure limitations on pipe and fittings, equipment, and accessories. HTW systems are similar to the more familiar low temperature hot water systems but must be carefully designed because of the rapid rate of pressure rise occurs in hot water over 440 degrees F. Higher pressures increase system costs as higher pressure rated components are required. Heat generation equipment will be designed in accordance with ASME Boiler Codes. Compared to a boiler which will generate steam or hot water, the high temperature water generator is specifically designed to keep water in the liquid state at high temperatures. The system must be maintained at a positive pressure to do this and a uniform flow through the generator must be maintained at all operating conditions.

1-5. ADVANTAGES OF HTW SYSTEMS

HTW systems have numerous advantages over steam heat distribution systems. The inherent losses of a steam system may be saved resulting in possible fuel savings in a HTW system over the equivalent capacity steam system. The amount of blowdown required by a boiler depends on the amount and nature of the makeup water supplied. HTW systems have closed circuits, require little makeup, therefore, practically never require blowdown whereas steam systems commonly lose about 1½ to 3 percent of the total boiler output because frequent blowdowns are required. Uneven firing in steam systems results in excessively high stack losses because of excessive boiler heat transfer and frequent maladjustments in the combustion air supply. Due to the heat storage capacity of HTW systems, short peak loads may be absorbed from the accumulated heat in the system and uneven firing is substantially reduced, keeping these losses to a minimum. This results in higher generator efficiencies than the equivalent steam boiler would have since the pressure in a steam boiler drops directly after a change in load requiring an adjusted firing rate. HTW has many characteristics which make substantial savings possible in the operation and installation costs of properly designed heat distribution systems.

a. Design. The closed recirculation system reduces transmission and thermal losses to a minimum while practically eliminating corrosion and scaling of generators, heat transfer equipment, and piping. Makeup requirements of HTW systems are almost nonexistent, less than ½ of one percent water loss per day of the total contents of the system. Operation within closed circuits permits reducing the size of water treating systems to a minimum. Both supply and return high temperature water piping can be run up or down and at various levels to suit the physical conditions of structures and contours of the ground between buildings without the problems of trapping and pumping condensate. Traps and pressure reducing valves, which require substantial maintenance and which are the causes of substantial losses in steam systems, are eliminated. These features simplify both new design and subsequent extensions to existing systems. Transmission distances do not offer unacceptable constraints. Steam suffers rather extreme pressure and temperature drops during transmission; high temperature water is much less affected by such pressure drops for a given pipe size. A circulating pump head takes care of pipe resistances. Since the requirement of several temperature levels can be met with HTW systems without reducing the pressure of the heating medium, pressure reducing valves are not needed. Since the water is circulated at generator pressure or slightly higher, single-stage low head circulation pumps take the place of the high-pressure boiler feed pumps required in steam systems. The

Information Handling Services, 2000

heat storage capacity of HTW systems evens out the heating load on the generator which gives higher generator efficiencies because of the elimination of overfiring and sudden changes in firing which result in poor combustion and high stack gas temperatures. Small generator installations are possible due to the more uniform firing rate and the capability of the heat accumulated in the system to take peak loads. Precise modulated temperature control may be obtained by hand or automatic means. Because the heat transfer characteristics of high temperature water can be more exactly calculated and predicted than those of steam, if correctly designed, high temperature water produces more dependable and uniform surface temperatures of the heat transfer equipment than steam can achieve. ASHRAE "HVAC Systems and Applications Handbook", chapter 15, "Medium and High Temperature Water Heating Systems" will be consulted for design guidance as well as for references for specialized applications.

b. Capital Investment. Smaller pipe sizes are used with HTW systems than with steam systems. This, together with the 15 to 20 percent smaller generator requirements because of elimination of condensate return losses, the reduction in size of the feedwater treatment plant, and the long life of the installation, results in a lower capital investment. Even though the generator may be smaller than a corresponding steam boiler, the HTW generator may typically cost more. The analysis will be based on overall system costs. The cost of heat exchangers to convert the heat to lower temperature and pressure mediums is usually more than justified, based on an overall system cost analysis, by the elimination of traps, return condensate pumps, pressure reducing stations at the heat using device, as well as the reduction in fuel cost of HTW systems as compared to steam systems of comparable size.

c. Operation and Operating Costs. Savings in operating costs are possible in the closed circulation high temperature water system which returns all heat unused by the users or not lost through pipe radiation to the heating plant. This eliminates the losses of condensate and the heat in the condensate due to faulty operation of traps and leakage in a steam system. Simple methods can be used to determine the heat produced and delivered to the various buildings and heat users since only the temperatures and flow rates are required to compute these quantities. Reduction in distribution temperatures to correspond with heat demands and seasonal variations makes possible additional operational savings. Steady firing of generators results in higher efficiency and fuel savings. Leakage in HTW systems is limited to amounts lost from pump glands and valve packing.

d. Repairs and Maintenance. Maintenance of traps and reducing valves, a substantial expense in steam systems, is eliminated with HTW systems which require only the maintenance of valve and pump packing to eliminate leakage. As an example, one HTW system, in operation for 15 years without water treatment, was found to be free of scale and corrosion, proving substantial reduction in maintenance of this type. Steam condensate piping, on the other hand, must commonly be renewed every five to ten years due to high corrosion caused by oxygen in the condensate.

e. Safety of Operation. Breaks or leaks in HTW lines are not nearly as dangerous as they are in steam lines. One reason for this is the refrigerating action accompanying release of the water as it expands, which makes it possible to hold the hand within a foot or two of the rupture without being burned. The water is cooled further by evaporation in the air. Another reason is that the amount of saturated water which can pass through an opening is about one half the amount of cold water which would pass through, and less than the amount of steam which would pass through. Therefore, combining these two effects, the amount of heat, in Btu's, which would pass through an opening is from 5 to 10 times as great with saturated steam than with saturated water, depending upon the pressures involved, the size of the break, and the length and size of the pipe. Any high-pressure system, however, whether steam or water, requires experienced operation as well as good design. Operational risks such as those due to water hammer must be avoided in the design and operation of both types of systems.

f. Provision for Future Expansion. Future expansion should be considered in the initial design of any system so that the system can be expanded at any time up to the design capacity of the plant and the distribution piping. Heating plant and distribution system capacity may be equally expandable in either system.

1-6. PROPERTIES OF HIGH TEMPERATURE WATER

The properties of low temperature water are familiar to most engineers. It is a fluid with a high density, high specific heat, low viscosity, and low thermal conductivity, and requires high pressure to be maintained at high temperature. Because water is inexpensive and readily available, the unfavorable high pressure requirements are counterbalanced economically. It is also known that vari-

Information Handling Services, 2000

ations in density, specific heat, viscosity, and conductivity with changes in pressure are negligible. It is not well known that the properties of water at high temperatures are even more favorable than those at low temperatures with the main disadvantage being high pressure. As an example, the specific heat of water is as high as 2.0 Btu/lb/degree F. at pressures of about 160 atmospheres and temperature of 660 degrees F. Of greater importance, however, are the properties of water within the temperature range of 300 to 400 degrees F. as applied to process and district heating systems. The influence of pressure on the properties of high temperature water within this operating range has negligible effect upon its properties. The influence of temperature, however, is considerable and deserves closer study. Refer to ASHRAE "HVAC Systems and Applications Handbook", chapter 15 for tables of water properties for temperatures up to 400 degrees F. and other published handbooks for the thermal properties of water from 400 degrees F. to 700 degrees F. Note the rapid rise in pressure as the temperature rises above 400 degrees F. and the increase in specific heat above 240 degrees F.

a. Pressure/Temperature Relations. As temperature rises, the pressure rises rapidly causing the economic pressure limit to be reached at 450 degrees F. or below for most applications. Beyond this point the cost of equipment and piping is prohibitive thus eliminating the savings in using HTW.

b. Density. This property is very important since it reflects the expansion and contraction of water in a system with temperature changes and thereby determines the size of the expansion vessels required in hot water systems. Between 340 and 450 degrees F., the volume of water in the HTW system increases from 10 to 18 percent above that at 70 degrees F. An expansion vessel able to store this additional volume is required when the system is brought up to maximum temperature. Two expansion tanks are recommended, each sized for 50 percent of the total capacity of the operating system plus the additional expansion volume. This will facilitate required periodic inspection of either tank without causing whole system shutdown.

c. Relative Heat of Steam and High Temperature Water. A comparison of the heat contained in a cubic foot of water going through a 150 degree F. drop, or other value used in design, with the latent heat of steam at utilization temperature shows that the HTW contains much more heat per cubic foot than does the steam. This property of high temperature water accounts for the large heat accumulation capacity of HTW systems in relatively small pipelines.

d. Piping Pressure Drops. Comparisons of steam and HTW piping pressure drops cannot be made without reference to assumed comparable conditions. Pressure drops in high temperature water circuits have only a very minute effect upon the water temperature and are important only for selecting pumping power and pipe sizing. Steam suffers, in practice, many times the pressure drops suffered by water, causing a substantial energy loss as well as a temperature drop. This is due to the large volume of steam and consequent high velocities commonly used to transmit heat with moderate pipe sizes.

1-7. PRESSURIZATION

The maintenance of the proper temperature in the distribution system is a function of the pressure maintained on the system. There are two basic pressurization methods employed and an alternate (hydraulic pressurization) method for standby service.

a. Steam Pressurized.—The steam pressurization method utilizes an expansion vessel separate from and downstream of the HTW generators. In this vessel HTW is allowed to flash into steam to provide a cushion to take care of expansion of water in the piping system. The selected steam pressure determines the temperature of water in the expansion vessel which is then utilized to supply the distribution system pumps. The selected saturation pressure is chosen with due consideration of required HTW delivery temperature and with proper allowances for system heat losses. The expansion vessel must be located above the HTW generator outlets. This method should not be used for a new system or for system upgrades because of the lack of sufficient extra pressure (above the saturation pressure of the liquid) needed to prevent flashing under all operating conditions. This method may only be used for a base loaded plant where the steam demands are relatively constant.

b. Inert Gas Pressurization. This method also utilizes an expansion vessel separate from and connected to the system return water header. An inert gas cushion is maintained within the expansion vessel. Nitrogen is usually utilized as the inert gas because it is inexpensive and widely available. Air must not be used as it contributes to corrosion of the system. Pressure is usually maintained at 40 to 60 psi above saturation temperature of the distribution system. In determining the

Information Handling Services, 2000

minimum starting pressure, a 10 degrees F. safety factor should be added to the HTW delivery temperature which is the governing factor. Pressure is maintained by automatic control independently of the heating load. The expansion vessel can be located on the operating floor of the heating plant.

c. Hydraulic Pressurization Method. The hydraulic system consists of a pressurizing pump with a regulator valve which continuously bypasses pump discharge water to a makeup storage tank and injects water into the system to maintain the desired pressure. This system may be utilized for smaller systems only or included as a standby system to keep the HTW system operational when the system expansion tank is out of service for inspection and maintenance.

1-8. WATER CIRCULATION

Water is circulated by either a single or dual cycling method. The single cycling method uses one set of pumps to circulate water through both the HTW generator and the distribution system using a bypass control valve to regulate flow through the HTW generator. The dual cycling method uses two sets of pumps, one to circulate water through the HTW generators and a separate set of pumps to circulate water through the distribution system. Combinations of these methods result in four basic types of water circulation:

a. Inert Gas-Pressurized Single Circulation Method. A single circulation system, also called a one-pump system, is shown in figure 1-1.

Information Handling Services, 2000

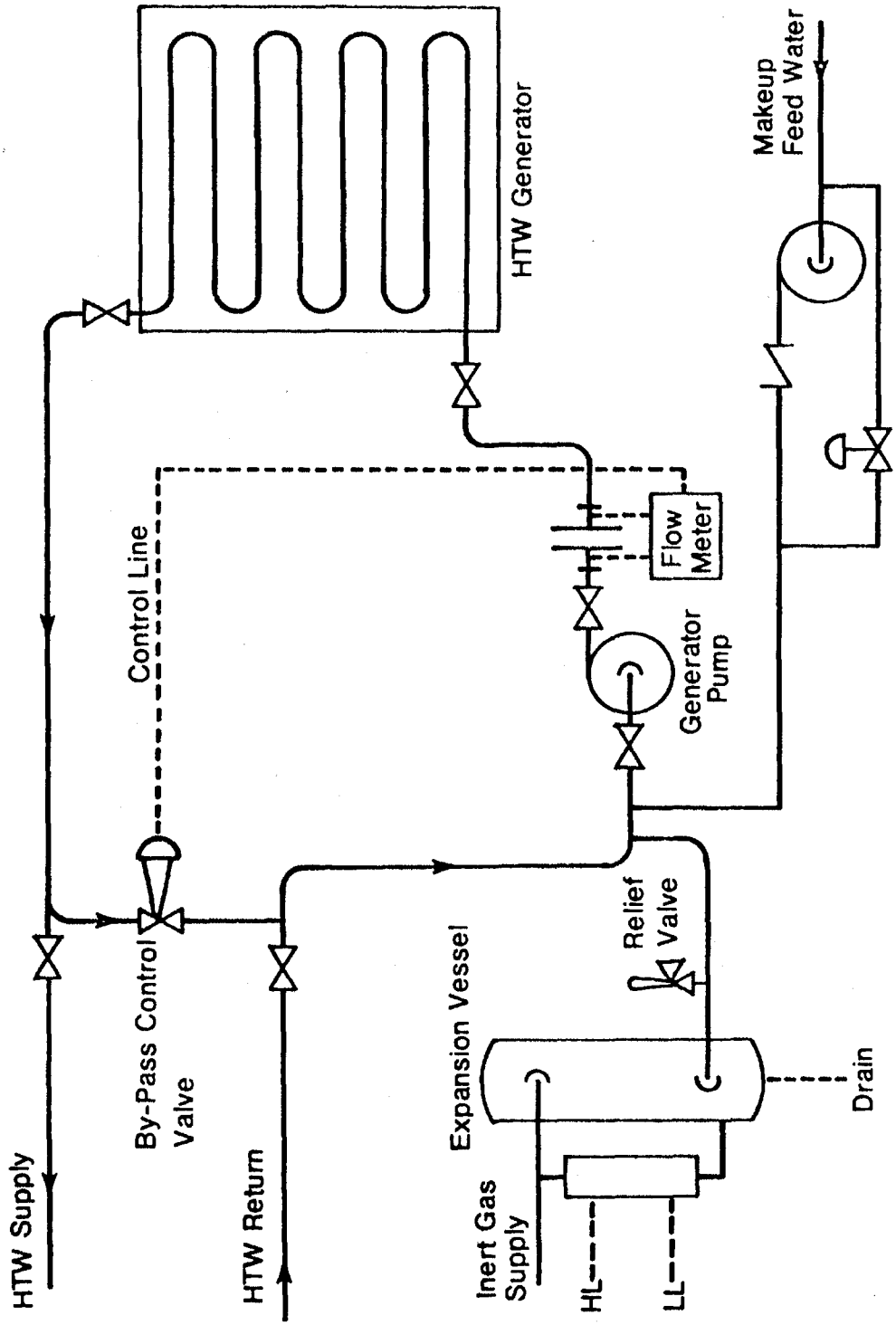

Figure 1-1. Inert Gas-Pressurized Single Circulation Method.

U.S. Army Corps of Engineers

Information Handling Services, 2000

b. Inert Gas-Pressurized, Dual Circulation Method. A dual circulation system, also called two-pump system, is shown in figure 1-2.

Information Handling Services, 2000

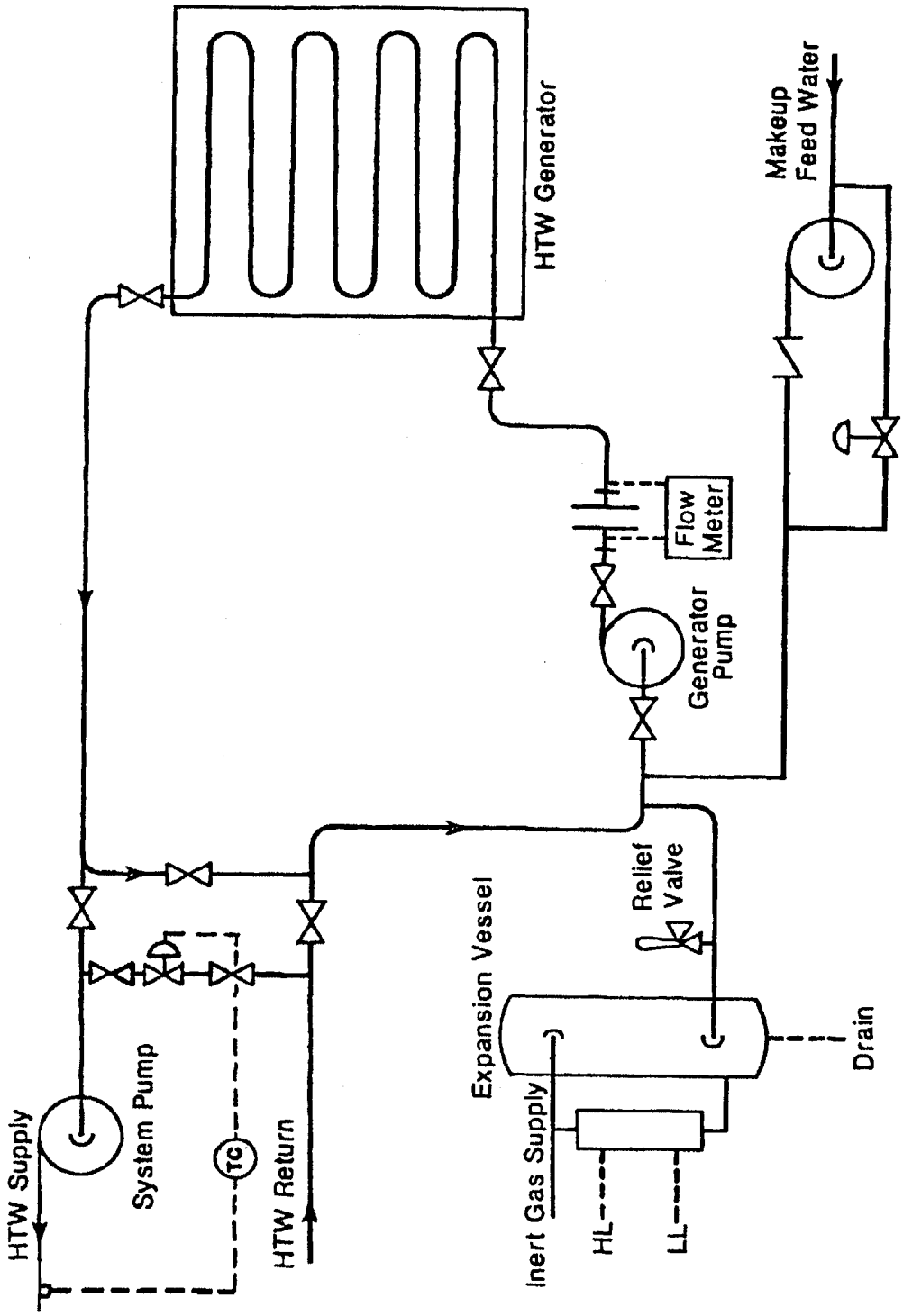

Figure 1-2. Inert Gas-Pressurized Dual Circulation Method.

U.S. Army Corps of Engineers

Information Handling Services, 2000

c. Steam-Pressurized, Single Circulation Method. A single circulation system, also called one-pump system, is shown in figure 1-3.

Information Handling Services, 2000

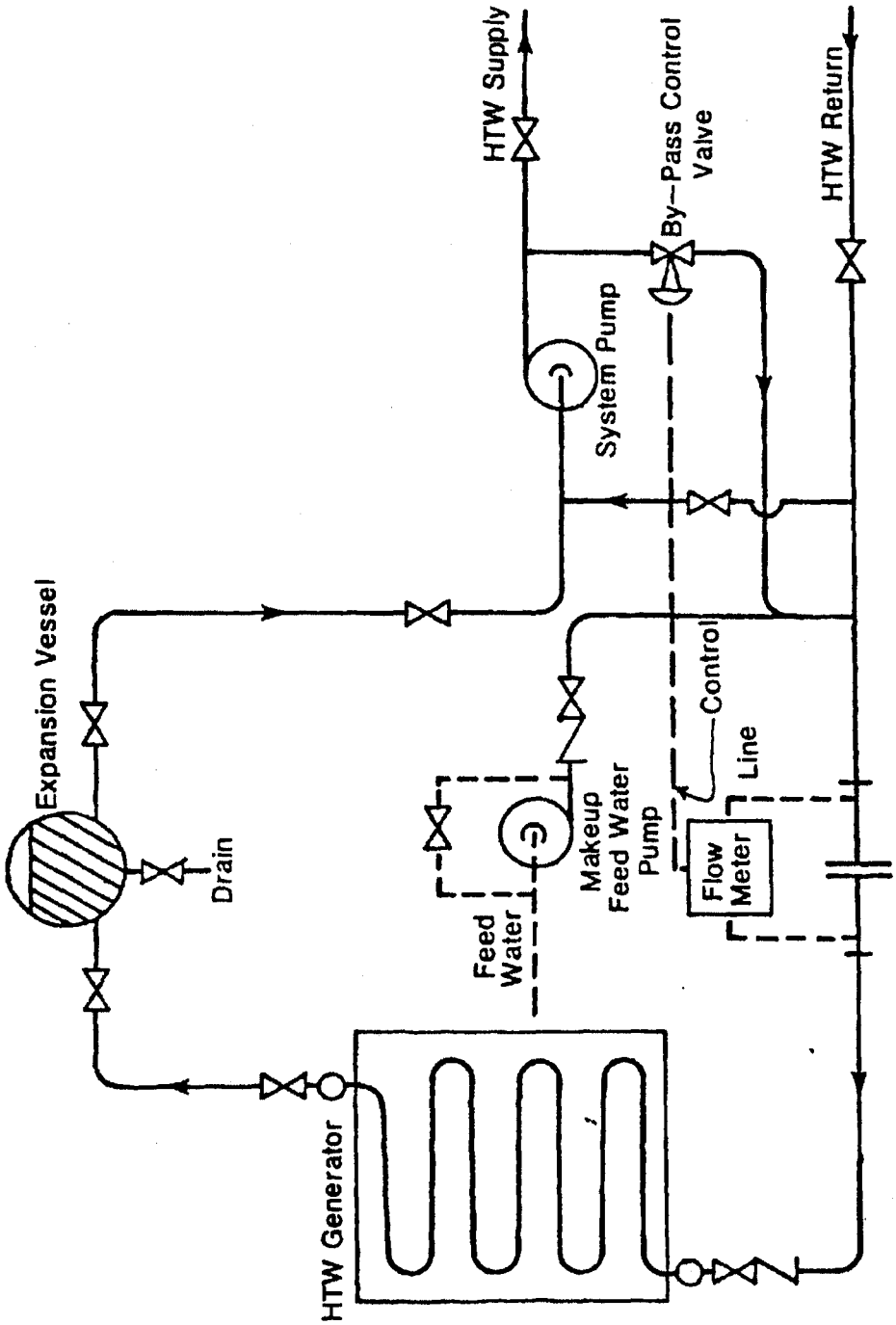

Figure 1-3. Steam-Pressurized Single Circulation Method.

U.S. Army Corps of Engineers

Information Handling Services, 2000

d. Steam-Pressurized, Dual Circulation Method. A dual circulation system, also called two-pump system, is shown in figure 1-4.

Information Handling Services, 2000

3515789 0830231 073

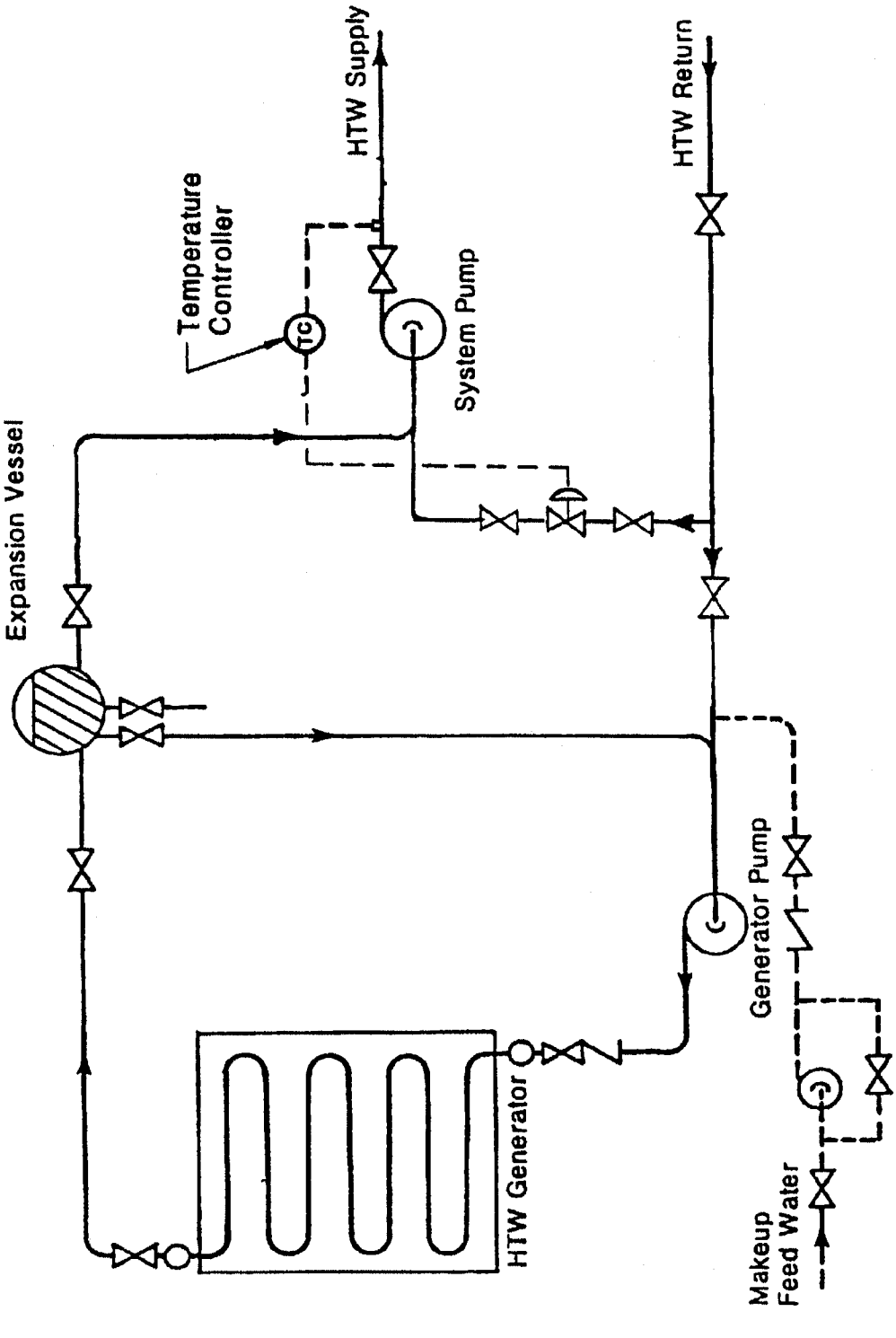

Figure 1-4. Steam-Pressurized Dual Circulation Method.

U.S. Army Corps of Engineers

Information Handling Services, 2000

1-9. HTW GENERATORS

There are three basic types of HTW generators. However, only the water tube controlled forced circulation once through type HTW generator is suitable for all fuels and is recommended for all systems. Generators must be specifically designed for HTW service and no attempt should be made to field-adapt a steam boiler for HTW service. The natural circulation HTW generator and the fire tube Scotch marine generator should not be used for a new system for the reasons cited in the following paragraphs. Use of the water tube natural circulation HTW generator or the fire tube Scotch marine generator must be approved by the using agency.

a. Water Tube Controlled Forced Circulation HTW Generator. The water tube controlled forced circulation type is primarily designed for high temperatures and high rate of heat transfer. Water is strained and metered by orifice/strainers to each tube circuit to accommodate the heat absorbing capacity of the circuit. The generator is designed for low waterside pressure drop and vapor binding will not occur under any operating condition since all tube circuits are vented to the outlet headers. All circuits are drainable. The counter flow of gas and water assures maximum efficiency (better heat transfer for a set of given conditions). The undesirable features are: external pumping is required and chemical control of the water in the system must be closely maintained. However, good water treatment and proper operation and maintenance usually avoid tube failure. In small sizes up to 10 mega Btu/hr output, a single-pass continuous water tube type is available.

b. Water Tube Natural Circulation HTW Generator. This type is available from most generator manufacturers in a wide range of sizes; there are proven designs for steam operation; and a large group of operators experienced in their use. The undesirable features are: the unequal heat distribution which is overcome by water mass which permits no real control of circulation; the large drums and headers provided for steaming result in areas in which water is not exposed to high temperature and, therefore, internal turbulence exists; the large size of the unit; and the fact that the use of steaming boilers is, at best, a compromise whether water is taken from below the water line or obtained from cascades.

c. Fire Tube and Scotch Marine. This generator is low in cost and the complete packaged unit is available as a shelf item in smaller sizes but should not be used because of the following undesirable features:

(1) Unequal heat distribution with no real control of water circulation.

(2) Tendency to make steam.

(3) Thermal shock is encountered even with internal distribution tubes.

(4) Unequal expansion of tubes results in excessive maintenance when operated at HTW temperatures.

1-10. DESIGN AND SELECTION PROCEDURE

Planning for a new heating system should be a systematic method that in addition to HTW also includes consideration of alternative heating systems such as steam as the heating medium.

a. System Design. Loads for various heat using devices at the facility will be determined taking into consideration future expansion or a possible future change in the mission of the facility. This can be done by various approximating or estimating procedures. In some instances the actual loads for existing facilities are available. On a copy of the master plan, indicate demands of various heat users. The thermal center of demand will be determined to see if it is compatible with the plan for the location of the central heating plant. If not, select a site that is compatible with the master plan. Zones of distribution from the heating plant will be developed. Make every attempt to have balanced loads in each zone if possible. Using pipe sizing tables suitable for water above 300 degrees F., approximate main and branch sizes.

b. System Selection. Review chapter 2 of this manual and also TM 5-810-1 and approximate the equipment and the heating plant configuration for HTW and for steam. At this point it is not necessary to develop highly refined calculations or selections. Define selections to the extent necessary to meet basic requirements for developing the system. Fuel for generators will be selected in accordance with current DOD policy and agency or service directives and criteria.

(1) *Small Systems.* HTW central heating systems with an estimated total capacity ranging from 10,000,000 to 50,000,000 Btu/hr will be designed as a single circulation system also known as a one-pump system, with combined pumps as shown in figure 1-5 if system is an existing base loaded, steam pressurized system, or figure 1-7 if an inert gas pressurized system. In these systems pumps take suction from the expansion vessel (also called expansion drum) and deliver water to the system and through the generators to the expansion drum. These plants are relatively small in size and will be designed as simply and as trouble-free as possible.

Information Handling Services, 2000

(2) *Medium Size Systems.* HTW central heating systems larger than 50,000,000 Btu/hr but not over 120,000,000 Btu/hr will be designed as dual circulation systems with separate generator recirculating and system circulating pumps. This system is also known as a two-pump system. Pressurization will be inert gas pressurized.

(3) *Large Size Systems.* HTW central heating systems larger than 120,000,000 Btu/hr will be designed the same as those over 50,000,000 and will be inert gas pressurized.

(4) *Final Selection.* The engineer designing the system will investigate current trends in design and equipment before selecting the system. Typical basic flow diagrams for the systems are shown on figures 1-5, 1-6, 1-7, and 1-8. Figure 1-9 illustrates inert gas-pressurization using variable gas quantity with gas recovery. The total heating system plan must be reviewed to determine and develop costs for incremental development based upon proposed development phases of the master plan. Tabulate the system plan by development phase and determine costs using current costing procedures.

Information Handling Services, 2000

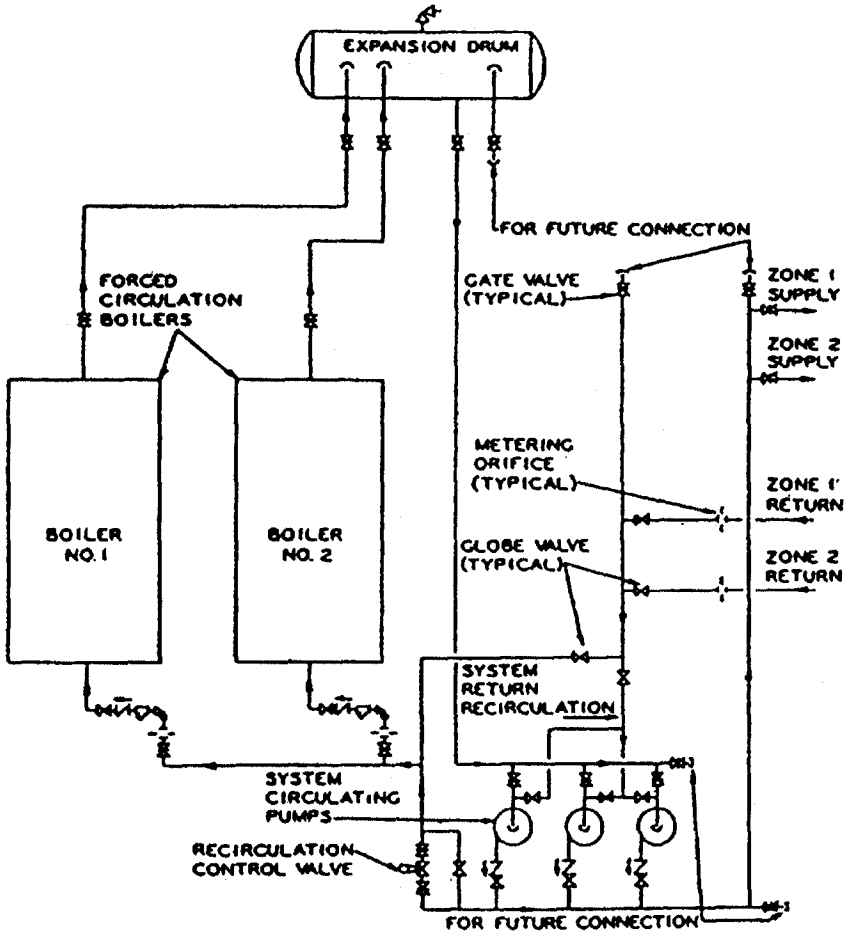

Reprinted with permission from
1987 ASHRAE Handbook HVAC
Systems and Applications

Figure 1-5. Flow Diagram Steam Pressurized Single Circulation System.

Information Handling Services, 2000

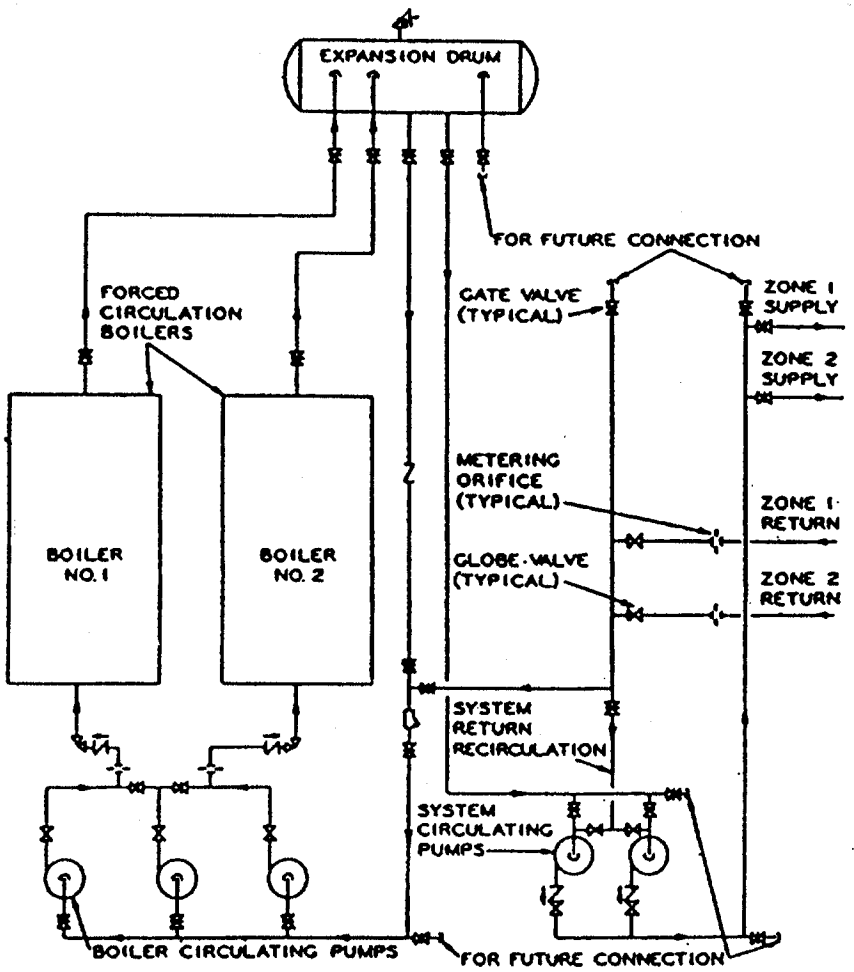

Reprinted with permission from
1987 ASHRAE Handbook HVAC
Systems and Applications

Figure 1-6. Flow Diagram Steam Pressurized Dual Circulation System.

Information Handling Services, 2000

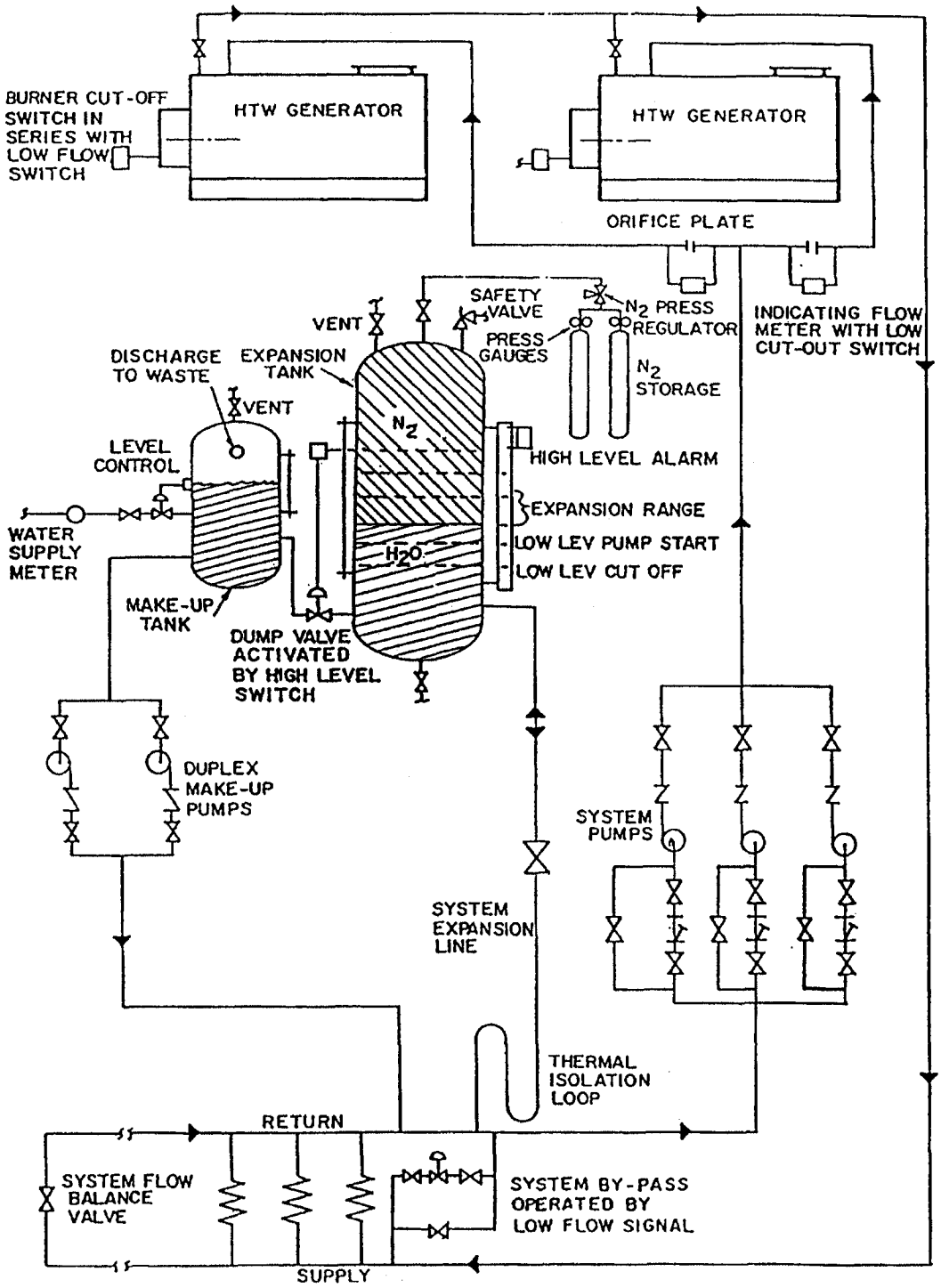

U.S. Army Corps of Engineers

Figure 1-7. Flow Diagram Inert Gas Pressurized Single Circulation System.

Information Handling Services, 2000

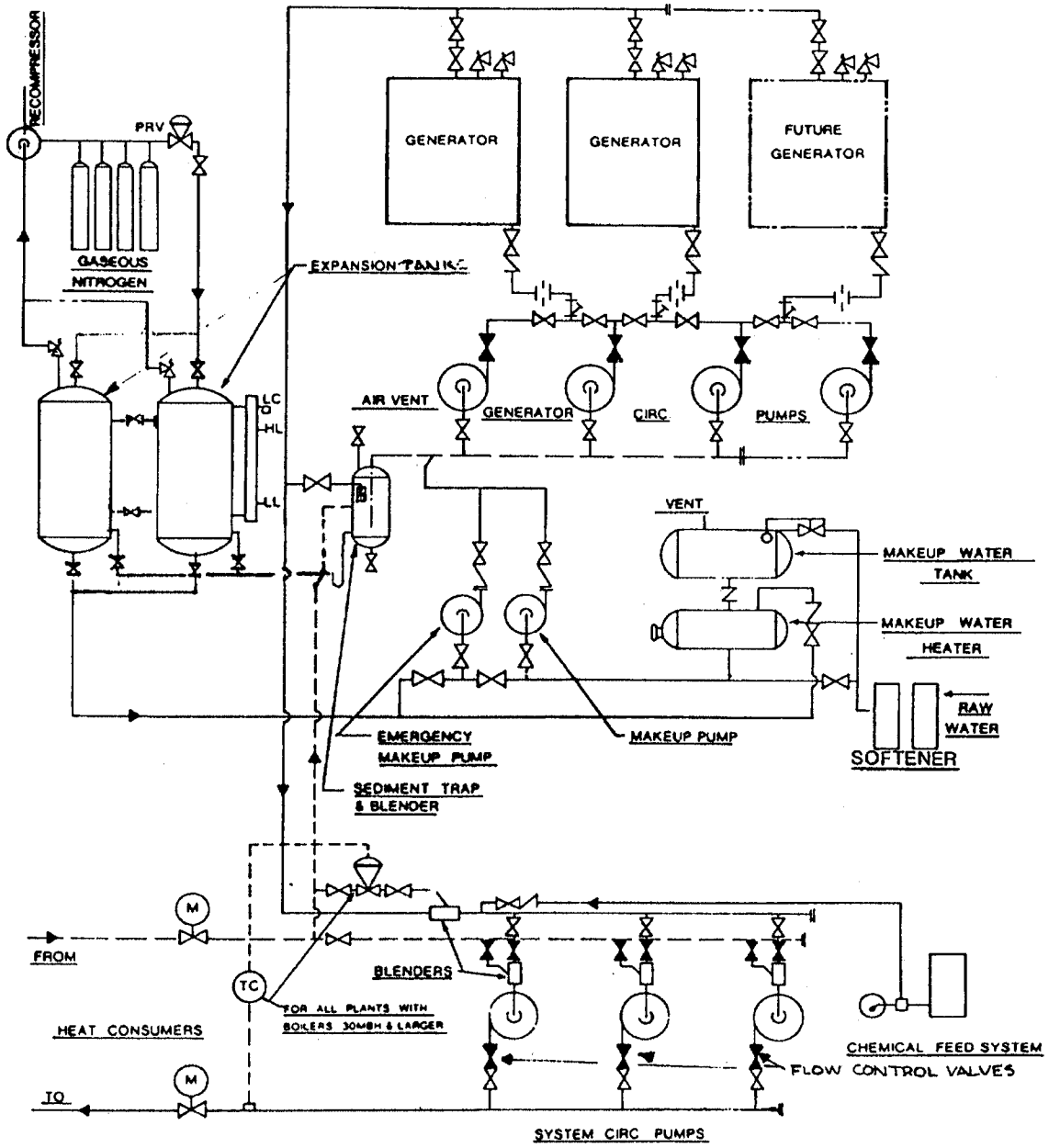

U.S. Army Corps of Engineers

Figure 1-8. Flow Diagram Inert Gas Pressurized Dual Circulation System.

Information Handling Services, 2000

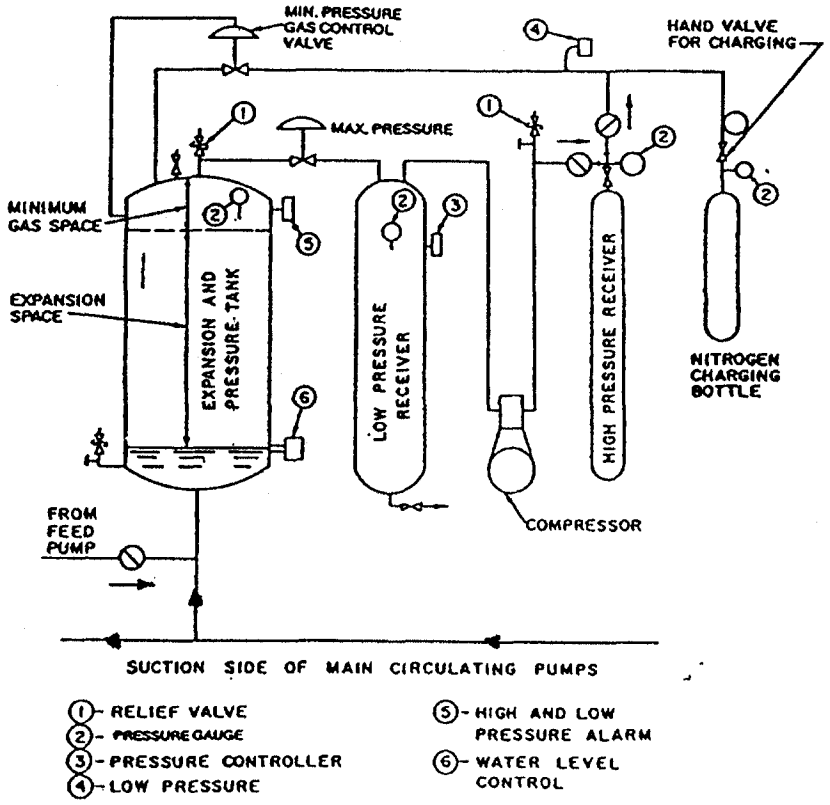

Reprinted with permission from
1987 ASHRAE Handbook HVAC
Systems and Applications

Figure 1-9. Inert Gas-Pressurization Using Variable Gas Quantity with Gas Recovery.

1-11. ECONOMIC JUSTIFICATION

Heating systems for all installations will be designed for lowest overall initial and operating costs for the life of the facility.

a. Economic Analysis. The selection of one particular type of design for a heating plant, when two or more types of design are known to be feasible, must be based on the results of an economic study in accordance with the requirements of applicable criteria. The results of all studies are to be included in the design analysis documentation for the project. Clarification of the basic criteria for a particular design application in the Military Construction Program may be obtained by request to HQ USACE (CEMP-ET), Washington, DC 20332-1000.

b. Central Heating Plants. Central heating plants are justified when the total life cycle costs of central heating plants with connecting distribution systems for groups of two or more independent buildings (to be built simultaneously or within a period of years) are less than totals for individual heating plants which would provide the same service. However, this comparison does not apply when steam-electric power plants are involved and the overall cost of providing heat from extraction steam would be less than either of the above methods. Central plants will have their own enclosures, but when economically justified, small plants may be located in one of the buildings of the facilities they serve.

Information Handling Services, 2000

c. Individual Heating Plants. These plants may be in the buildings they serve or in separate buildings when economically justified. Such plants shall be considered in preference to central heating plants under the following conditions:

(1) When total life cycle costs of individual heating plants are less than the costs of a central heating plant with connecting distribution piping to buildings receiving heat.

(2) When installation and maintenance costs for constructing an extension of an existing distribution system from a central plant to an isolated building are not economically justified.

(3) When dispersal of facilities and continuity of services are so essential that disruption of service to a central heating plant or its distribution piping cannot be tolerated.

(4) When only a single building is involved without prospects of adding buildings in the future.

d. HTW Versus Steam Heating Plants.

(1) A HTW central heating plant will be selected in preference to a steam plant under the following conditions:

(*a*) When the thermal storage capacity of an entire HTW system results in less cost in equipment such as boilers, pumps, and piping.

(*b*) When operating and maintenance costs of an entire HTW system are less than those of a steam system.

(*c*) When costs of excavation, makeup water, and heat losses are appreciably reduced by using a HTW distribution system.

(*d*) When the pressure and temperature requirements of heat using equipment may be satisfied more economically by HTW distribution.

(*e*) When needed expansion of existing steam or low temperature water systems are more costly than installing a new HTW system.

(2) A steam central heating plant will be selected under the following conditions:

(*a*) When a HTW system cannot be justified on the basis of the analysis above.

(*b*) When fluid pressures and temperatures required by equipment cannot be provided by a HTW system.

(*c*) When the engineering design required for a HTW system and its equipment is not available.

(*d*) When rehabilitation of an existing steam heating plant and distribution system is more economical overall.

Information Handling Services, 2000

CHAPTER 2

LOAD CHARACTERISTICS AND CALCULATIONS

2-1. HTW REQUIREMENTS

This chapter deals generally with the load characteristics and calculations for load summaries for HTW systems for area or district heating. Area or district heating involves the distribution of heat to space heaters and various equipment for process heating. The various types of heat users may be separated into these two categories: space heating loads which are subject to variations in weather conditions and process heating loads which are usually steady. The general features of these applications are discussed in this chapter. Equipment commonly used is described in a later chapter.

2-2. SPACE HEATING

Space heating is usually provided by indirect heating using secondary heating medium such as steam or hot water. High temperature may be used as a direct heating medium only in limited situations and only where close temperature control is not a requirement.

2-3. PROCESS HEATING

This term applies to all forms of heating other than space heating including domestic hot water; steam and hot water for kitchens, laundries, and hospitals; and steam cleaning and snow melting equipment.

a. Direct Process Heating. Direct use of high temperature water is the most economical use of heat transmission for air and roller driers and washing equipment in laundries; for washing equipment in kitchens; and for sterilizers and other equipment in hospitals. Equipment for direct application will be of special designs and materials and not standard designs of manufacturers.

b. Indirect Process Heating.

(1) *Domestic Hot Water.* Domestic hot water is required for showers, lavatories, bathrooms, and kitchens. It can be produced by high temperature water coils inserted in the lower part of the domestic water storage tank. Generally domestic hot water temperatures up to 140 degrees F. are recommended. Control of the quantity of high temperature water flowing through the coils is maintained by an element sensitive to the temperature of the water in the storage tank.

(2) *Laundries.* To keep the high temperature water return temperature at a minimum, it is suggested that the heat requirements for laundries be separated as (a) hot water requirements, (b) low-pressure steam requirements, and (c) high-pressure steam requirements. Laundries are generally considered to require high-pressure steam at 75 to 100 psig and low-pressure steam at 5 to 15 psig. Before the pressure ordinarily prescribed for steam laundry equipment is accepted as the basis for designs in high temperature water systems, careful consideration should be given to the actual equipment needs. Frequently, if the steam is generated in high temperature water converters, somewhat lower pressures can be used without sacrifice of performance. It is not economical to produce all of the steam needed in a laundry at the highest pressure in one central steam generating converter using high temperature water as this will result in unnecessarily high return temperatures in the high temperature water distribution system. Therefore, separate steam generating converters are used for high and low pressure steam. Low-pressure steam from 5 to 15 psig can be produced in a low-pressure steam generating converter. If space heating steam at 5 psig is also required, a combination may be made producing 10 psig steam for both purposes. However, such a combination with 30 psig steam would certainly be impractical. High-pressure steam requirements can be met either by using high temperature water directly, provided that the equipment is designed for it, or by producing 75 to 100 psig steam in a separate high-pressure steam generating converter. The high-pressure steam requirements are never a large fraction of the total heat load for a laundry. The steam generator must be equipped with an automatic condensate return system and makeup water system as well as adequate controls to limit the pressure of the steam when the maximum steam pressure is reached. Hot water requirements will be met, ordinarily, by a storage water heater similar to a domestic water heater.

(3) *Kitchens.* Kitchens require hot water at 140 degrees F. for dishwashing which may be obtained from a domestic water heater described above. Water at 180 degrees F. required for mess and diet kitchen areas for final rinsing will be obtained from booster heaters located in the service areas. Steam at 40 to 80 psig is required in the kitchen for cooking. The high temperature water is used, in this case, to generate steam at the re-

Information Handling Services, 2000

quired pressures. Steam production will be similar to that discussed above.

(4) *Hospitals.* Hospitals require domestic hot water for baths, lavatories, showers, sinks, and for other uses. In addition, steam is needed for sterilizers and autoclaves at 40 to 80 psig. A high temperature water system has the advantage that heat can be taken to any number of heat exchangers located adjacent to the sterilizers in different parts of several hospital buildings without needing steam traps and condensate return.

(5) *Steam Cleaning.* Steam cleaning equipment, sometimes required for cleaning airplanes or machinery, operates by ejecting water using high-pressure steam. In an HTW system this method would require production of high-pressure steam by heat exchangers. It is advisable to employ a high-pressure circulation pump which can supply water heated to the desired temperature in a heat exchanger, thereby accomplishing the same purpose as conventional steam cleaning equipment utilizing high-pressure water.

(6) *Snow Melting.* Snow melting may use high temperature water as the primary heat carrier. The secondary heat carrier can receive its heat through a converter and may be conventional low temperature water of 150 to 200 degrees F. or, preferably, a suitable heat transferring fluid such as Glycol or high temperature water. Both low and high temperature water should contain antifreeze such as Glycol when used for this duty. If high temperature water is used as the secondary heat carrier, it should be heated to temperatures of 300 to 350 degrees F. These elevated temperatures permit spacing of the lines in snow melting coils at 3 to 5 feet on centers, a design especially adaptable for large aprons, runways, and other areas where an expansive surface justifies application of high temperatures.

2-4. DIVERSITY FACTORS

On any system serving more than one point of use, the possibility of all use points requiring maximum heat input is almost nonexistent. Therefore, diversity factors are applied to the demand loads. Each individual use point load is not diversified, but total system loads are. When a system is being designed with plans for large numbers of future buildings, it is advisable to use diversity factors only for equipment sizing. Piping in the distribution system should be designed for undiversified conditions to allow for unscheduled future additions. This allows greatest flexibility in the piping. When a system is initially fixed with minimum future modifications or additions anticipated, then the distribution system piping will be designed fully diversified to get the most economical installation.

a. Heating Loads. A diversity factor of 80 percent is usually used for heating loads. This factor may be lowered to 70 to 75 percent in systems utilizing all automatic control for heating. The factor may also be adjusted after a review of the system indicates need for both automatically controlled heating and nonautomatically controlled heating.

b. Process Loads. For process loads encountered for only brief periods of time, such as for hot water and process steam, a diversity factor of 65 percent is usually used. The use point must be analyzed for demand characteristics, and the diversity factor adjusted upward with longer or more continuous demands.

2-5. OPERATING TEMPERATURES AND PRESSURES

Temperatures and pressures used in HTW systems depend upon the nature of the application. The factors determining the flow temperatures are the highest temperature needed in the system for heating or process requirements and the length of the distribution system. If the length of the distribution system exceeds six miles, it is frequently advisable to maintain a flow temperature substantially greater than that needed so that the pipe size may be reduced. Pressures in the system depend upon the temperatures required and at all times are maintained higher than the saturation pressure corresponding to the water temperature.

a. Supply and Return Temperature. A supply temperature limit of 440 degrees F. is generally found to be the economic limit for space and process heating because of the high pressures (400 psig) required. Higher supply temperatures require rapidly increasing pressures throughout the system, and while high pressures result in higher heat carrying capacities in smaller pipe sizes, the saving in pipe size is partially or fully offset by the expense of generators, fittings, pipelines and heat exchangers strong enough to withstand higher pressures. Return water temperatures should be between 250 degrees F. to 275 degrees F. minimum. Primary fuels or alternate fuels with high sulfur content can cause generator tubes to corrode. The selection of temperatures in the hot water generator during all operating conditions should be given special considerations with high sulfur content fuels. When flue gas is cooled below the dew point, the gas side of boiler tubes is subjected to corrosion. Corrosion is caused by moisture in the flue gas and acids which result from the combination of condensed moisture and sulfur compounds in the

Information Handling Services, 2000

flue gas. The higher the percent by weight of sulfur the higher the minimum metal temperature must be to prevent this type of corrosion. When it is desired to transfer very large heat quantities over unusually long distances, an increase in the generator pressure to 600 psig corresponding to a supply temperature of about 480 degrees F. might be justified. For distances up to six miles, the highest supply temperature will be selected below 440 degrees F. The generator supply temperature is always maintained somewhat above the temperature of the water distributed to the system. In steam pressurized systems this is necessary to prevent vaporization from taking place if the pumps should suddenly be stopped and where the heat users are located at elevations higher than the generator. The HTW system supply temperature is maintained by blending the generator output water with the system return water at the pump suction header. The HTW generator water is proportioned through an automatic mixing valve. Due to heat losses from the distribution system piping, the supply temperature at the use points will be reduced by approximately three to five degrees per mile, depending upon the insulation efficiency and the amount of water being circulated. The faster the water is circulated, the less the temperature drops. Process equipment using either direct high temperature water or steam produced by converters generally requires temperatures at the use points ranging from 250 to 400 degrees F. For example, some laundry drying equipment requires steam pressures of 100 psig which necessitates high temperature water of more than 355 degrees F. Therefore a heating installation which includes such laundry equipment will need a supply temperature of at least 375 degrees F. to provide for temperature losses and use point requirements and a generator pressure of no less than 175 to 200 psig. It often happens that while temperatures as high as these are not needed for space heating, they are economical supply temperatures to use for lower temperature applications because smaller pipe sizes are required. All HTW systems will be designed for a minimum of 150 degrees F. differential between supply and return water temperatures. See table 2-1 for influence of various temperature differentials on system components; compare 100 degrees F. with 150 degrees F. and note the difference in pump horsepower and pipe sizes as an example.

b. Operating Pressure. This pressure is directly related to the operating temperature which is essentially equal to saturation temperature in the expansion drum in a steam-pressurized system and slightly higher in an inert gas-pressurized system. Pressure head to overcome frictional and other losses must be added to the operating pressure when selecting pumps, piping, fittings, and other system components. The pumps should never be used as part of the pressurization system.

Table 2-1. Influence of Temperature Differentials on Selection of Pump Sizes for HTW Systems.

Temperature Difference (deg. F.)	20	50	100	150	200
Discharge temperature (deg. F.)	270	300	350	400	450
Return temperature (deg. F.)	250	250	250	250	250
Mean Temperature (deg. F.)	260	275	300	375	350
Flow rate per 20 Mega Btu/Hr (M lbs/hr)	1,000	400	200	133	100
Density of Returning Water (lbs/gal)	7.86	7.86	7.86	7.86	7.86
Pump Capacity (GPM)	2,091	840	421	283	213
Assumed pump head (ft)	100	100	100	100	100
Pump HP required (HP)	82.7	32.9	16.3	10.8	7.9
Pump efficiency (%)	60	60	60	60	60
Pump suction size (not pipe size)	8"	6"	4"	3½"	3"

2-6. MAXIMUM INITIAL LOAD

The maximum initial load is the sum of heating, process, distribution loss, and plant auxiliary loads, all suitably diversified. Maximum summer load is also determined so equipment may be selected for ultimate loads which are as compatible with this load as possible. If not compatible, then special equipment for summer load only may be selected.

2-7. MAXIMUM ULTIMATE LOAD

Maximum ultimate load is the total of estimated future loads added to the maximum initial load.

2-8. ESSENTIAL LOAD

The essential load is the diversified load on all buildings where no cutback can be tolerated plus the minimum permissible loads where cutback can be tolerated plus additional minimum heating loads to avoid freezing.

Information Handling Services, 2000

2-9. MATCHING PLANT CAPACITY TO LOAD

a. Maximum Initial Load Generation. Where possible, size the initial heating plant for at least three generators of equal size. The maximum continuous capacity of the plant with one generator down will not be less than the essential plant load, and the total maximum continuous capacity of all generators will not be less than the maximum initial plant load. Where the ultimate plant load is known or may be estimated accurately, and where the construction program indicates plant expansion will be required within three years of the startup of the initial plant, then the ultimate load shall be weighed carefully as the basis for selecting the capacities of the initial generators. Under no condition shall the flow through any one generator be less than 100 percent of its designed capacity.

(1) Avoid installation of initial main generators of capacities radically smaller than those to be added when the plant is expanded to the ultimate size. Also avoid an unnecessarily large number of generators of size equal to the size of the initial generators.

(2) Include one small "summer load" generator where increased efficiency at low loads economically justifies its installation.

(3) The selection of oversize generators for initial installations will be submitted to HQ USACE (CEMP-ET), Washington, DC 20314-1000 or HQ USAF/CECE, Washington, DC 20332-5000, with supporting data, for approval before proceeding with final design.

(4) For plants over 50,000,000 Btu/hr, size the ultimate heating plant for three or more generators such that when one generator is down, the remaining generators shall carry the essential load.

b. Minimum Load Generation. Choose a means of bridging the gap between minimum and maximum loads to suit job conditions from the following design possibilities.

(1) Establish operating ranges of combustion control.

(2) Provide manual operation at minimum load. The turndown range of burners, or one of a number of burners on a generator, must include the minimum load. By changing burner tips in oil firing, very low minimum loads may be obtained.

(3) Establish intermittent operations for plants 30,000,000 Btu/hr or smaller, which will preclude a continuous watch or allow a single operator to leave a generator room for trouble calls on other matters by providing an auxiliary, fully automatic packaged generator which will shut off on satisfaction of heat demand and restart automatically when the demand increases. Avoid fully automatic generator operation of the entire plant. Plants over 30,000,000 Btu/hr will have a continuous watch.

(4) Use more but smaller generators to lower the plant's minimum capacity.

(5) Provide minimum load generators. Where the gap between a plant's minimum load and a plant's minimum capacity when using the main generators is very large, a small, fully automatic, packaged generator unit with its own circulating pumps may be used to fill the gap.

(6) Consideration should be given to the fact that the peak operating efficiency of a HTW unit is at approximately 80 percent of design capacity. At 80 percent load, the operators should be starting to think about bringing an additional unit on line and splitting the load. Typical operating efficiency curves are fairly flat from 50 percent to full loads.

(7) The best control philosophy is to employ a fully modulating burner with a turndown capability of at least 8 to 1. The unit can modulate over this range and be set up for automatic recycle after load decays below the maximum turndown. The simplest control utilizes single point positioning jack shaft for fuel and air. This method predominates the industry and eliminates many of the operational problems associated with more sophisticated systems as well as the requirement for more experienced operators.

2-10. SYSTEM HEAT LOSS

System heat loss is the heat loss from the distribution system and is dependent upon the length of lines, ground water conditions, and type of conduit and insulation. It is recommended that a factor of 5 percent be applied to the diversified peak load.

2-11. FLYWHEEL FACTOR

Flywheel factor or storage effect of the system is another consideration applied when selecting equipment for system sizing. Because of the volume of heated water, there is a considerable heat storage which can be considered available at peak design conditions. The accepted factor applied to the peak load is 85 percent.

2-12. CALCULATIONS

For the purpose of illustration of typical calculations for a high temperature water system, an example is given in appendix B.

a. Calculations of Temperatures and Flow Quantities. The heat required by the using equipment is usually the starting point in calculating the

Information Handling Services, 2000

return temperatures and the required flow quantities in the system. It may be expressed using equations which give results in pound per hour as follows:

$Q_1 = w_1 (h_s - h_1) = w_1 \, cp \, (T_s - T_1)$. (eq 2-1)

WHERE: Q_1 is the heat used by equipment X, expressed in Btu/hr; undiversified.

w_1 is the flow rate, expressed in lb/hr, passing through equipment X.

h_s is the enthalpy of the supply to equipment X; expressed in Btu/lb.

h_1 is the enthalpy of the return from equipment X; expressed in Btu/lb.

T_s is the supply temperature; expressed in degrees F.

T_1 is the return temperature from equipment X.

cp is the specific heat at constant pressure in Btu/lb.F

T_1 is determined by using equipment requirements, i.e., assume heating with 220 degrees F. low temperature water, then with 20 degrees F. approach on convertor 220+20=240 degrees F.=220+20=240 degrees F.=T_1. Considering a system with three heat using devices, use the following equations: (the subscripts identify the consumer under consideration).

$Q_1 = w_1 \, cp \, (T_s - T_1)$ (eq-2-2)

$Q_2 = w_2 \, cp \, (T_s - T_2)$ (eq-2-3)

$Q_3 = w_3 \, cp \, (T_s - T_3)$ (eq-2-4)

$Q_t = cp \, [(w_1 + w_2 + w_3)(T_s) - w_1 T_1 - w_2 T_2 - w_3 T_3]$

$Q_t = cp \, [(w_s)(T_s) - w_1 T_1 - w_2 T_2 - w_3 T_2]$ (eq 2-5)

Since $w_s = (w_1 + w_2 + w_3)$, the sum of the flows through all three heat users equals the total flow through the system. Q_t is the total amount of undiversified heat supplied to the system by the generator and is equal to the sum of the heat supplied to all consumers, or:

$Q_t = Q_1 + Q_2 + Q_3$ (eq 2-6)

The return temperature, T_r, may be found from the above equations and the expression:

$Q_t = w_s \, cp \, (T_s - T_r)$ (eq 2-7)

Combining, we get:

$T_r = (w_1 T_1 + w_2 T_2 + w_3 T_3)/w_s$. (eq 2-8)

The calculations above will supply an average temperature condition for a system with a variety of loads, i.e., heating, domestic, and process. If the system is essentially heating (80 percent or greater), then $T_s - T_r$ equal to 150 degrees F. design drop may be used to simplify calculations without introducing an unacceptable amount of overdesign.

b. Pump Selection. For a single circulation system, (or a one-pump system), minimum flow capacity of any pump is based on the essential load, and pump head requirement is the resistance through the HTW circulation system added to the flow resistance through the HTW piping system. Total pumping capacity is determined by combining the maximum initial load with the HTW circulation load. For a dual circulation system, (or a two-pump system), minimum pump capacity is based on the future anticipated load added to the maximum initial load. Multiple pumps are used to provide the flow needed for the essential load on each boiler. If there is no substantial anticipated load, the essential load can be utilized for sizing the generator circulation circuit. In any event, the minimum flow in this circuit must always be at least equal to the essential requirements.

c. Expansion Vessel Design. Graphical representation of volumes required for calculations are illustrated in figure 2-1. Figure 2-1 illustrates a circular tank section as for a horizontal tank, however, the expansion tank may be horizontal or vertical. For small systems between 1,000,000 and 10,000,000 Btu/hr, it is practical to size the expansion vessel for the total water expansion from the initial fill temperature. For larger systems water expansion is based upon operating conditions and not on startup condition. When placing the system in operation, it is necessary to bleed off the volume of water because of expansion from the initial starting temperature to the lowest operating temperature.

Information Handling Services, 2000

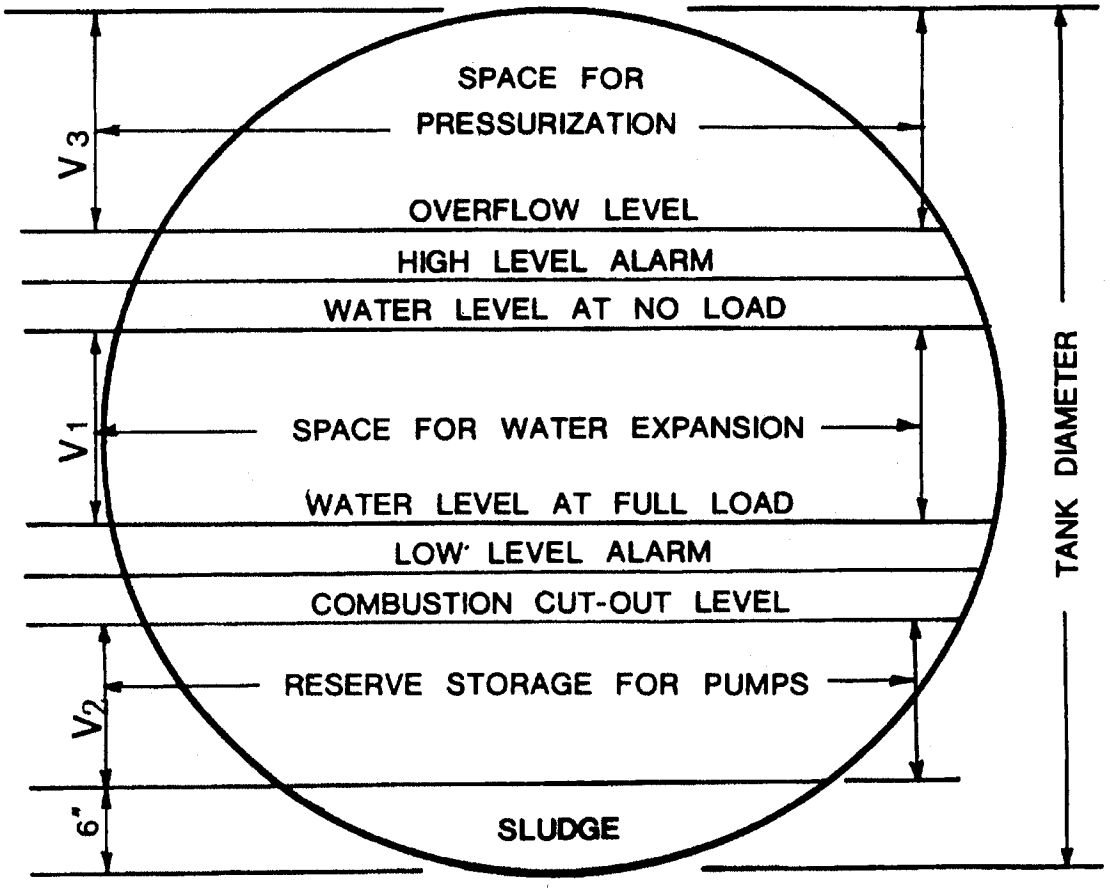

U.S. Army Corps of Engineers

Figure 2-1. Expansion Tank Volumes.

(1) *System Expansion Volume.* Water temperature is assumed to vary approximately 10 percent under normal operating conditions. The temperature changes in supply and return lines are generally computed separately and the results combined to obtain the total system expansion volume.

Where: V_{f1} = specific volume of supply piping water at supply temperature.

V_{f2} = specific volume of supply piping water at temperature of 10 percent less.

ΔVs = percent volume change in supply piping

$= (V_{f1} = V_{f2}) / V_{f2} \times 100$ (eq. 2-9)

V_{fr1} = specific volume at maximum return temperature.

V_{fr2} = specific volume at minimum return temperature.

(This temperature is T_r less the 10 percent ΔT found for V_{f1} and V_{f2}).

Δ_r = percent change in return system piping.

$= (V_{fr1} - {}_{fr2}) / V_{fr2} \times 100$ (eq 2-10)

Then: Total expansion volume $= V_1$

$= \Delta_s + \Delta V_{r/100} \times$ system volume. (eq 2-11)

(2) *Steam Expansion Vessel Design Data.* The minimum volume to be provided in a steam-pres-

Information Handling Services, 2000

surized expansion vessel is the sum of the system liquid expansion volume, a reserve volume for ½-minute pumping capacity, and a pressurization allowance of 20 percent of the sum of the two volumes above, or as shown on figure 2-1 for a horizontal tank:

V_1 = system expansion.

V_2 = ½-minute reserve for pumps based on the pump capacities outlined previously.

V_3 = pressurization space = 0.2 (V_1+V_2). (ASHRAE states that 20 percent of the sum of V_1+V_2 is a reasonable allowance.)

Then: Minimum expansion tank volume

$= V_1+V_2+V_3+$ allowance for level controls + sludge allowance. (eq 2-12)

The allowance for level controls should = (tank diameter) (length) (1-ft. depth), or 150 cubic feet nominal allowance should be used to determine tank volume and diameter. Then this volume should be checked against tank diameter selected. The sludge allowance should be at least equal to the bottom 6 inches of the tank, but the requirement can vary depending on the size of the system and HTW generator capacities. ASHRAE states that 40 percent of V_1 is a reasonable value. Tank diameters over 8 feet are uneconomical because of the shell thickness required to withstand the operating pressures and they are difficult and costly to fabricate. Bottom of tanks must be located above the high point of the HTW generators. System will be designed that a single expansion vessel will meet the operational requirements of the system. An exception may be a system which includes a large process load requiring continuous operation. In such a situation two tanks might be needed to allow isolation of one tank to periodically inspect for development of stress cracks without total system shutdown. Steam-pressurized systems usually require horizontal tanks since it is necessary that the tank bottom be higher than the hot water generator outlet.

(3) *Inert Gas Pressurized Expansion Vessel Design.* A single expansion tank is preferred as the most economical installation. A system with large process heating, which requires some continous operation, might require two tanks each sized for 50 percent of total system expansion to allow for one tank to be periodically inspected without total system shutdown. A two-tank arrangement is shown in figure 1-8. When multiple tanks are used, nitrogen and water equalization lines are required between the two tanks. The tank will contain a gas pressurization space and should be a vertical tank to reduce the contact area between the gas and water and thereby minimize gas absorption by water. Gas wastage will affect operating costs. The gas recovery system as shown in figure 1-9 should be analyzed on the economics of each application. It is generally more applicable to larger systems, as shown in figure 1-8. The simplest gas pressurization system has a fixed quantity of gas in the expansion tank to accommodate the change in water volume within the tank. As the water temperature increases the expansion of water into the tank raises the pressure of the system and the system pressure decreases as the water temperature of the system drops. The pressure is allowed to vary a minimum value above saturation pressure to a maximum determined to be within pressure range of the piping equipment and HTW generators. Referring to figure 2-1 and assuming a vertical tank, the minimum total volume required in the expansion tank is

$V_1 + V_2 + V_3 +$ sludge allowance (eq 2-13)

Where: V_1 = a volume required for water expansion.

V_2 = a volume for a ½-minute pumping reserve.

V_3 = the pressurization space. Select an operating range to keep system pressures within pressure rating of valves and fittings and compute V_3. The nominal operation pressure should be a minimum of the saturation pressure for the HTW generator plus a differential pressure (ΔP_1). This differential pressure is usually taken as 40 psi. Since the return water temperature will vary, some pressures will be lower and some higher than this assumed nominal operating pressure. Assume a differential operating pressure range (ΔP_2). Add 0.75 ΔP_2 to the nominal operation pressure to obtain the maximum operating pressure P_2 and subtract 0.25 ΔP_2 from the nominal operation pressure to obtain a minimum operating pressure, P_1.

To size the expansion tank, select a convenient diameter and compute the required tank height as follows:

Let: V_{lf} = volume in cubic feet per foot of tank height = $\pi D^2/4$

where D = diameter of tank in feet.

Vertical displacement for V_1 = V_1/V_{lf}

Expansion displacement: V_3 can be determined from the relationship V_3 minimum = $P_1V_1/(P_2-P_1)$

Displacement = V_3/V_{lf}.

Total tank height is the sum of the above computed vertical displacements plus an allowance for

Information Handling Services, 2000

sludge equivalent to 10 percent of V_1+V_3.

For the smaller systems it is possible to accommodate total system expansion volume in the expansion vessel. The makeup water should be handled in a separate tank and not be part of the expansion vessel circuit.

Information Handling Services, 2000

CHAPTER 3

DISTRIBUTION PIPING AND EQUIPMENT

3-1. DESIGN OF SYSTEM

The distribution system for a HTW heating system includes the supply and return piping, conduit (if buried), and related equipment extending from the heating plant to the buildings to be heated. The master or site plan of the facility must be studied to plan the distribution lines. The heat using equipment (consumers) of a facility may be served by a number of different arrangements, so various distribution plans should be studied before choosing sizes and the number of distribution zones. Ideally, zones should be drawn to segregate those consumers having high return temperatures from those having low return temperatures; those which require constant high supply temperatures, such as those serving processes, from those which might have viable supply temperatures; and, finally, separating consumers which must be operated throughout the year from those which operate intermittently. These separations of loads help make the system as flexible and economical as possible. One factor which tempers these ideal approaches is the selection of distribution lines based on maximum capacity of lines of practical dimensions. A layout will be prepared following the procedures outlined above showing the distribution system and the flow required in each zone, main supply, and return line and branch line. In contrast to steam systems where buildings can be connected to the steam mains which form an open loop around the site, high temperature water will have a circulating system with supply and return mains. However, it is possible to connect designated buildings, such as hospitals, to two different distribution zones so that either of the zones may serve these buildings at any time. Switching over from one zone to the other must be done very carefully, however, to avoid shocks. For this reason, all valves used for changing zones must have bypasses. Example distribution system layouts are shown in appendix C.

3-2. PIPE SIZING

a. General. In a HTW district heating system, pipe sizing is determined largely by the allowable velocities used for design and resultant pressure drops. Minimum allowable velocity should be 2 feet per second (fps) to avoid stratification except that minimum pipe size shall be 1½ inches, maximum allowable velocity should be 7 fps. Five fps is a good nominal design velocity. The maximum velocity of 7 fps may be used for long delivery lines with pipe sizes 6 inches and larger which have few branch takeoffs, provided protection is incorporated in the design to take care of surges caused by power failure at the system circulating pumps. Lower velocities result in lower transient surges in long lines.

b. Calculation of Pressure Drop. The pressure drop due to the friction of water flowing through pipe and fittings may be calculated by formulae as covered in ASHRAE "Fundamentals Handbook", or may be selected from charts which have been developed and published in many handbooks. Since selection of pipe sizes is limited to sizes commercially available, using extensively refined formulae for extreme accuracy prove time-consuming and impractical for the average system.

3-3. DISTRIBUTION PIPING

a. General. Standard weight steel pipe, Schedule 40, is generally satisfactory for most HTW systems. Seamless is the preferred type fabrication; however, it is more expensive than welded piping and this should be considered in designing the system. Extra strong weight (Schedule 80) pipe will be used on sizes 2 inches and smaller. All joints will be welded and designed in accordance with ASME B31.1, however, Class 300 insulating flanges will be used for dielectric connections at every pipe connection from a trench system or aboveground system to an underground system and at dissimilar metals. Gaskets for flanged connections will be of material designed for dielectric service for pressure/temperature at each point of application in the system. Flanged connections may be allowed at connections to converters and equipment. Great care must be exercised in the design and installation of piping and vessels to ensure enough flexibility to permit thermal expansion to take place without creating stresses greater than those allowable for the pipe, fittings, or vessels. Distribution lines are installed with properly designed U-bends, L-bends, or z-bends to permit expansion and with anchor points and guides where needed. Provision must be made for venting and draining all lines. Branch takeoffs must be designed properly to prevent interference with flow through both the main distribution lines and the branch circuits. Serious problems have occurred where specifications depend on ASME B31.1 for

Information Handling Services, 2000

nondestructive testing. ASME does not require such unless the temperature is above 350 degrees F. at 1025 psi. Radiographic inspection of all welds in the distribution systems may be highly beneficial at little increase in cost. Proper pipe and vessel design stress limits require a working knowledge of the provisions of ASME B31.1, paragraph 102.3.2 relating to thermal stress.

b. Expansion Loops and Anchors. Steel pipe expands approximately 3 inches per 100 feet when subjected to a temperature change of 400 degrees F. Refer to table C1 in ASME B31.3 for unit expansions for steel pipe. Expansion of steel pipe with temperatures as follows:

Pipe Temperature	Expansion, in./100 ft, from 0 degrees F. to pipe temperature
100	0.6
150	0.9
200	1.3
250	1.7
300	2.2
350	2.6
400	3.0
450	3.5
500	4.0

The flexibility of piping systems must be adequate to prevent thermal expansion from causing unsafe stresses in the pipe and fittings, excessive bending moments at the joints, or excessive thrusts on equipment or at the anchorage points. Credit for cold springing will not be used in calculations for determining amount of expansion to be incorporated. Methods for calculating expansion bends are available in handbooks and in pipe manufacturers' literature. Expansion loops or elbows will be used as the most practical means of accommodating expansion of distribution piping located either above or below the ground. Loops and elbows are preferable to expansion joints because they are not subject to the hazards of misalignment which can cause line breaks. Expansion U-bends are generally located at the midpoint between two anchor points with guides at the loop and a vertical restraint at the midpoint of the loop, if aboveground. It is preferable to keep the axes of the long legs of these bends in a common plane. Anchors, solidly connected to a concrete base, must be sufficiently strong to withstand the full unbalanced pressure of the water and the stresses of expansion as well as the weight of the line filled with water. Anchors are commonly located between expansion bends both in underground and aboveground installations. Pipe guides of the type used in steam line construction must also be used. In general, the procedures used in the design of steam lines should be followed taking into account the additional weight of the water carrying conduit.

c. Expansion Joints. Slip, bellows, ball, and corrugated type expansion joints are not practical with HTW systems and will not be used.

d. Air Bottles, Drains and Vents. Air bottles of adequate size must be provided at all the high points of HTW systems. Automatic drain valves are not practical. The vents on air bottles very seldom have to be used since air enters the system only when filling the system with water or when starting up after a long stoppage. Drain connections will be installed at the low points of the distribution piping. When drains cannot be run to sewers, draining may be accomplished by portable self-priming pumps. Figure 3-1 shows a typical drain and a typical vent with air bottle. When distribution piping is run underground, it is necessary to locate drains and vents in suitably located manholes with connections to the outside. Drains and vents are required on both sides of sectioning valves.

Information Handling Services, 2000

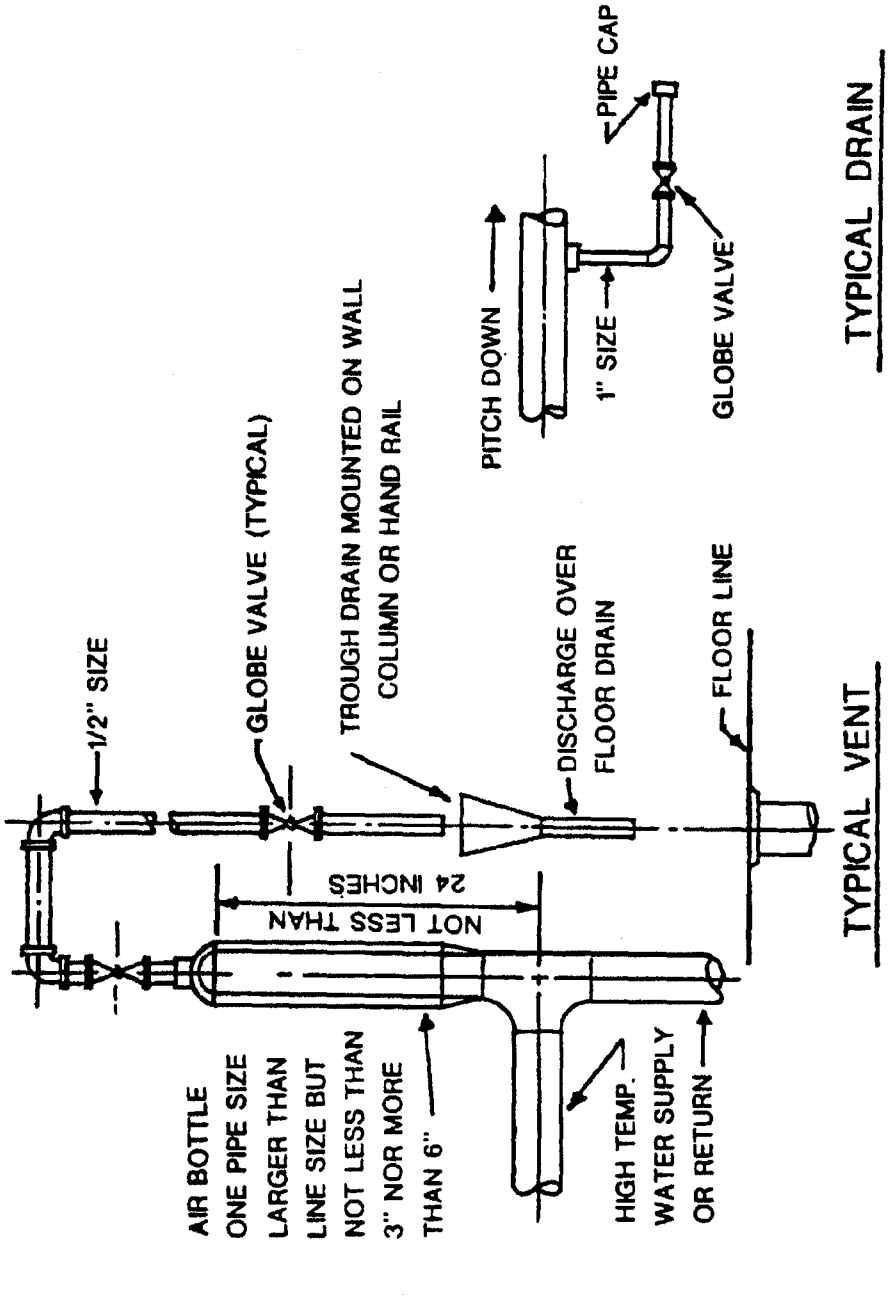

U.S. Army Corps of Engineers

Figure 3-1. Typical Vent and Typical Drain.

e. Branches and Branch Valving. Branches must take off at 45 to 60 degree angles from the mains to assure flow into a branch at all times. If the branches are relatively small compared to the size of the main, they will be taken off the top of the main. If they are of nearly equal size, they may be taken off the top or sides. Branch piping requires drains, and air bottles with vent valves located, respectively, at the low and high points of the lines. Branch valves will be provided at each junction. Branch valving is required for shutoff purposes or for sectioning. Additional valves located inside the building are convenient and more easily maintained but cannot replace main line

Information Handling Services, 2000

branch valves at junction with main piping on account of inaccessibility in the case of fire or other hazards which might make the building inaccessible. Valves such as sectioning valves in the mains which are used only in the fully open or fully closed positions can be gate valves. All other valves which must be opened gradually or which are used to make adjustments preferably should be globe types. Branch valving is commonly located in manholes when the piping is run underground or, when lines are not too far below grade, in valve boxes. In either case branch valves must be accessible for maintenance.

f. Sectioning Valves. Sectioning valves on the supply and return lines must be provided at a number of locations to isolate sections of the mains for repairs and emergencies. Sectioning valves are operated only at infrequent intervals and, therefore, should be valves especially designed for easy operation, tight seating, and resistance to corrosion. Lever-operated rising stem valves would be suitable sectioning valves for the smaller pipe sizes. Gate valves designed for the pressures and temperatures expected are generally used for section valves.

g. Bypass Values. Bypass valves may be installed at the end of zones which are planned for extension to assure circulation of hot water and prevent stagnation. Normally a 1½-inch globe valve is satisfactory for this service.

h. Insulation. All parts of the plant supply and return lines operating above 140 degrees F. will be insulated with insulation suitable for the operating temperature. Flanges, valves, and pumps shall also be insulated.

i. Relief Valves. Relief valves should be high quality carbon steel with stainless steel disc and nozzle rated at 750 psi and 800 degrees F. Valves should be of the type which can be repacked without removing them from the line.

3-4. UNDERGROUND AND ABOVEGROUND SYSTEMS.

a. General. High temperature water distribution lines may be run either above or below the ground. Underground lines may follow the contours of the ground. Lines aboveground may be run on short concrete supports, or 10 to 12 feet above the ground on wooden, concrete, or steel supports. They may be run over or under obstructions without difficulties. While concrete supports may be best suited to many applications, they are not necessarily the least expensive. It is essential that the lines be protected by metal covers called jackets. Underground piping may be located 2 feet below the ground level. Although it is not essential that the lines be located below the frost line, high temperature water lines have not been found to freeze when located only 2 feet underground even when they have been out of operation for many hours. One of the greatest concerns in the design of underground piping is the elimination of moisture from conduits and manholes. Sumps will be provided in the manholes with facilities for pumping out the water. Proper sealing of conduit entrances and exists in manholes is of very great importance. The arrangement of manholes for high temperature water applications is similar to that used for underground steam lines except that no provision need be made for the disposal of drip line condensate.

b. Basic Criteria for All Types of Conduit Systems. Since all underground systems eventually become wet and water is the major adverse factor encountered, all systems will be of a type that can be drained and dried. The insulation will be of a type that can be drained and dried. The insulation will be of a type that can withstand repeated or extended boiling and drying without physical damage and/or loss of insulating characteristics. The project designer will include in contract documents the following information regarding the site and where conditions vary along the proposed path of the system and will define separately the conditions for the various segments of the system. If at all practicable, a geotechnical engineer familiar with underground water conditions at the site shall be employed to establish the following classifications. If the system to be installed is expected to be used for less than 10 years, consideration should be given to classifying the site one class lower than it would ordinarily be classified (e.g., bad rather than severe).

(1) *Severe.* The water table is expected to rise frequently above the bottom of the system; or the water table is expected to occasionally rise above the bottom of the system and surface water is expected to accumulate and remain for long periods in the soil surrounding the system.

(2) *Bad.* The water table is expected to rise occasionally above the bottom of the system and surface water is expected to accumulate and remain for short periods (or not at all) in the soil surrounding the system; or the water table is never expected to rise above the bottom of the system but surface water is expected to rise above the bottom of the system but surface water is expected to accumulate and remain for long periods in the soil surrounding the system.

(3) *Moderate.* The water table is never expected to rise above the bottom of the system but

Information Handling Services, 2000

surface water is expected to accumulate and remain for short periods in the soil surrounding the system.

(4) *Mild.* The water table is never expected to rise above the bottom of the system and surface water is not expected to accumulate in the soil surrounding the system.

c. Corrosive Classification. The soil of each site should be classified as corrosive or noncorrosive on the basis of the following criteria:

(1) *Corrosive.* The soil resistivity is less than 30,000 ohms per centimeter (ohm/cm) or stray direct currents can be detected underground; all sites classified as having severe water conditions should be classified as corrosive.

(2) *Noncorrosive.* The soil resistivity is 30,000 ohm/cm or greater and no stray direct currents can be detected underground. The classification shall be made by an experienced corrosion engineer after a field survey of the site carried out in accordance with recognized guidelines for conducting such surveys. The results of the field survey should be summarized in a report and submitted by the design organization to the Contracting Officer with the contract documents.

d. Soil pH. If there is any reason to suspect that the soil pH will be less than 5.0 anywhere along the proposed path of the system, pH measurements should be made at close intervals along the proposed route, and all locations in which the pH is less than 5.0 should be indicated in the contract documents. Soil pH should be determined by an experienced geotechnical engineer, preferably the same engineer responsible for other soils engineering work. The load bearing qualities of the soil in which the system will be installed should be investigated by an experienced geotechnical engineer, again preferably the same engineer responsible for other soils engineering work, and the location and nature of potential soils problems should be identified.

e. Cathodic Protection. Cathodic protection will be designed in accordance with TM 5-811-7 when required for metallic casing systems.

Information Handling Services, 2000

CHAPTER 4
HEATING PLANT

4-1. INTRODUCTION

This chapter describes the elements that go into the central heating plant of a high temperature water system. The information is of a general nature because of the many equipment manufacturers involved in the special specification requirements of each system.

a. Capacity. The capacity of the central heating plant must be large enough to handle the design loads of the connected system. The capacities of installed generators must be able to provide the essential plant load with one generator out of operation. Both winter and summer loads and day and night loads will be considered when these loads are highly variable. In addition, planning plant size must phase heating loads for the initial installation and for the future extensions so that the heating plant will operate efficiently during each stage of expansion. The individual generators selected should not be too small and the larger the number of generators the more economical will it be to adapt to the variations in the heating load and to operate the plant continuously at maximum efficiency. Usually three or more generators are required to permit installation of the plant in increments.

b. Savings. If the heating plant can be designed initially for the final maximum size, careful analysis will be undertaken to see whether subdivision of generator units greater than three or four is justified. The savings obtainable by reducing the size of the spare unit may be overbalanced by the additional costs created by the subdivision. In this evaluation the possible increase in operating efficiency should not be overlooked.

4-2. HTW GENERATORS

Most HTW generators are the fuel-fired type generating HTW directly. There are other installations where HTW can be generated from steam. One such condition would be obtaining HTW from a steam-powered turbine generating electric power. Boiler operating temperatures and pressure would fall within the range of heat requirements for generating HTW. There may also be instances of process steam systems being available to produce HTW.

a. Steam-Activated HTW Generators.

(1) Heat-Exchanger HTW Generator. A basic (shell-and-tube) heat exchanger could be utilized to generate HTW, and the HTW system from the outlet of the HTW generating heat exchanger would be a standard system requiring expansion tank, pressurization, and circulating pumps with the return water directed to the heat exchanger.

(2) Cascade HTW Generator. There is another type of HTW source which utilizes a cascade heater. This is a direct contact vertical vessel where system return water is cascaded over trays in the upper part of the vessel and makes direct contact with the steam supply. The lower part of the cascade heater serves as the system expansion tank and the upper part serves as the steam-pressurization chamber. Surplus water generated by the water absorption of steam is usually returned directly to the boiler through a pipe from the circulating pump discharge header. This unit requires little equipment and lends itself to being located in any location convenient to the steam distribution system. Different zones can be handled by providing multiple units matching zone requirements. A typical cascade HTW system is shown on figure 4-1. Cascade heaters are especially applicable where high-pressure process steam is available. An ideal situation would be a boiler plant supplying cogeneration steam turbines for local power and also supplying high-pressure process steam. Since the cascade heater raises the water temperatures by direct absorption of steam by the HTW circuit, the practically continuous excess liquid content is bled off and becomes part of the boiler condensate return system. This is an ideal condition both for heating HTW and obtaining good quality condensate return. If high-pressure steam is distributed to distant buildings, then a cascade type heater fits into the remote location and simplifies zoning and running of extra water lines from a central plant.

Information Handling Services, 2000

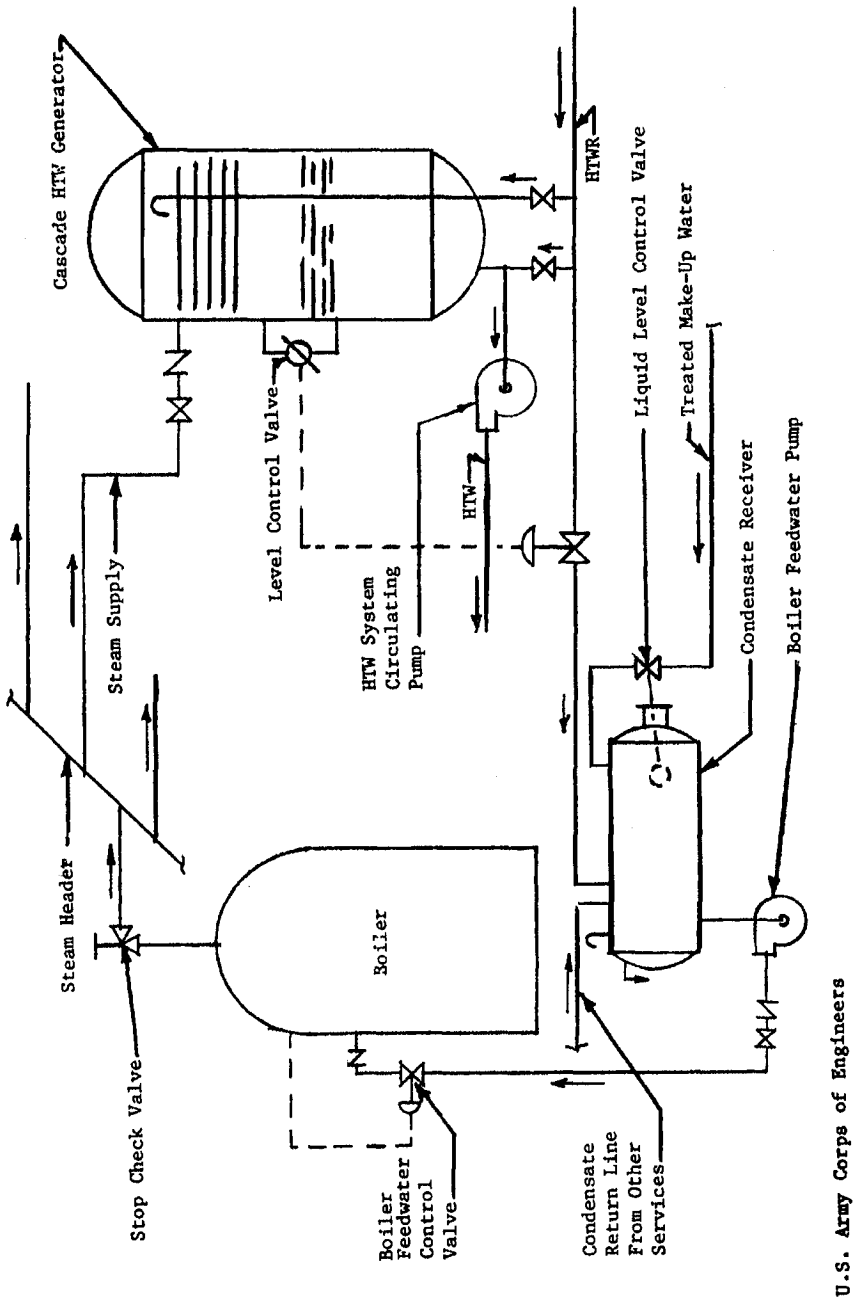

Figure 4-1. Cascade HTW System in Process Steam System.

b. Direct-Fired HTW Generators. Most manufacturers offer water tube generators specifically designed for high temperature water application using controlled forced circulation. The majority of generators installed are of this type. Natural circulation generators using larger-sized water tubes without orificing should not be used. Forced circulation generators for high temperature water applications use the recirculation principle. Evaporation is limited to the small amount necessary to raise the return water from the system to the saturation temperature. The forced circulation secures positive flow in one direction through each tube circuit at all times regardless of the rate of

Information Handling Services, 2000

heat transfer. Orifices with strainers placed at the entrance of the tube circuits, proportion, equalize, and direct the required amount of water flow in each circuit. The degree and location of the restriction may be varied to suit the length, arrangement, and heat absorption of the circuit. Forced circulation generators are usually designed with smaller overall heating surface than natural circulation generators of the same output. This does not mean that the critically loaded parts of the generator surface such as the water walls are more highly loaded than they would be with natural circulation generators. The higher overall heat transfer per unit surface area results largely from the fact that a larger portion of the generator surface is operating under higher loading than would be possible with natural circulation generators. In natural circulation generators, the heat absorbed by the water produces the buoyancy which starts and maintains the circulation. The circulation therefore varies with the rate of firing or the local rate of heat transfer. In order not to restrict this circulation, comparatively large tubes are favored. The effectiveness of the heating surface of the generator is reduced by the fact that the necessary downcomers must not be heated as intensely as the risers so as to assist circulation. This increases the size of natural circulation generators in comparison with forced circulation generators. Great care must be exercised in the application of natural circulation generators to HTW systems so that the forced circulation in the external circuit does not interfere with the natural circulation inside the generator.

c. Generator Configuration. Two basic outlines have evolved and are in general use today: the horizontal unit, in which gases travel horizontally out of the furnace and through the convector section, has a large base area and a relative low height; and the vertical unit, in which the convector section sets above the furnace and which has a relatively small base area and a high profile. This variance in shape affects the space design in the heating plant so that early selection of the generator is desirable to obtain an economical structure. If early selection is not possible, the building should be designed to house either configuration.

d. Package Unit. The term "package unit" is used rather loosely, and manufacturers ship packaged units in more than one piece. However, the tendency is to prefabricate as much as is economically feasible and to field-assemble as little as possible. Railway and road clearances are the factors limiting size. Most manufacturers supply units up to 75 Mega Btu/hr in a single factory-assembled package, and sizes up to 150 Mega Btu/hr in two pieces: the furnace section couples with the convector section on site. Above the 150 Mega Btu/hr size, the units are generally "knocked-down" and built up in panels: four walls, base, and top for field assembly. Through all the size ranges, burners and accessories may be shipped separately if mounted dimensions exceed route clearances. Stokers for coal firing are generally installed at the site.

4-3. COMBUSTION EQUIPMENT AND CONTROLS

Fuel for generators will be selected in accordance with the current DOD policy and agency or service directives and criteria. Select fuels which produce the required plant performance at lowest overall production cost for an entire plant, including amortization and operating and maintenance costs for all elements.

a. Combustion Equipment. Oil and gas burners should be UL 733 and UL 795 approved units. Stokers for coal will be selected on the basis of generator size, the type of coal used, and the characteristics of the load. In general, however, spreader stokers are recommended as most suitable for HTW generators. They will be of the continuous ash discharge type. Oil storage and handling equipment and coal and ash storage and handling equipment should be selected and sized based upon the size of burners or stokers selected and agency or service directives and criteria.

b. Control Systems. Combustion controls usually are set to regulate the firing rate to maintain a preset water temperature at the discharge nozzle of the generator. For closer control and more stable operation, anticipating compensation is frequently used. Since flow through the generator is very rapid, the sensing device must respond rapidly to temperature changes. One arrangement, developed specifically for high temperature water application and successfully applied on several installations, make use of two small and extremely sensitive and highly reliable solid-state sensors called thermistors. One is located in the generator discharge water and the other in the system return water flowing to the generator. These sensors are electronically balanced in the bridge circuit which adjusts the firing rate of each generator in direct proportion to the temperature spread between inlet and outlet water and maintains the outlet water temperature at the controllers setting. Manual potentiometers are provided to adjust settings and throttling range. The two common typical control systems are shown schematically on figure 4-2.

Information Handling Services, 2000

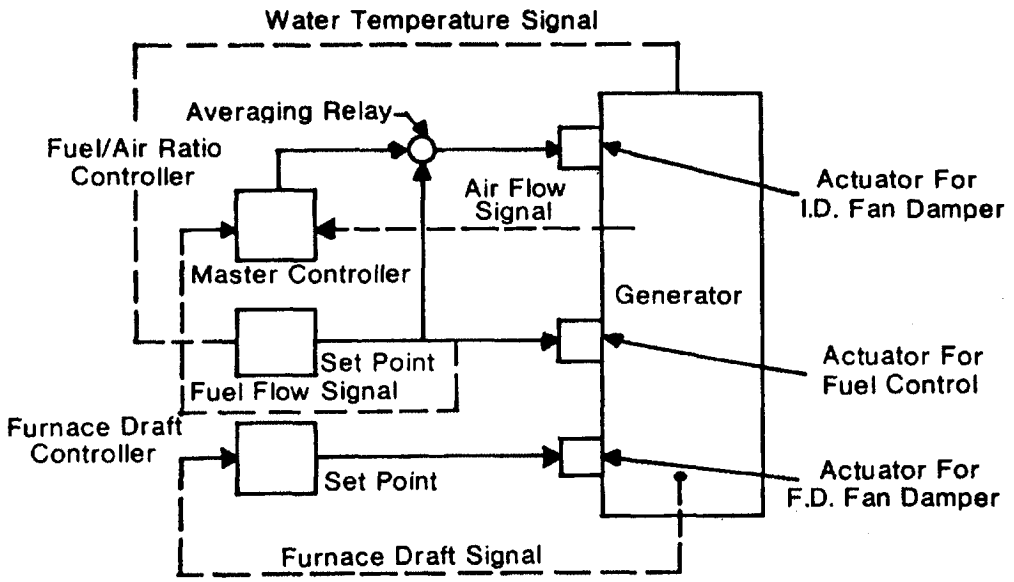

METERING TYPE

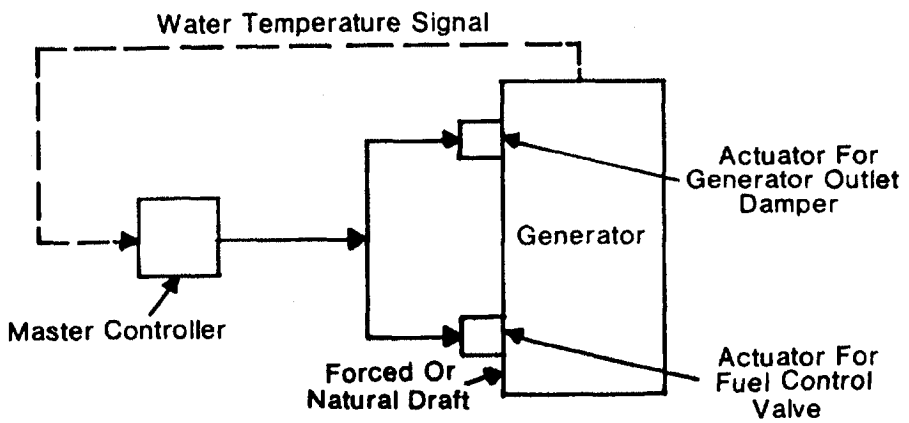

POSITIONING TYPE

U.S. Army Corps of Engineers

Figure 4-2. Typical Combustion Control Systems.

(1) For systems having generators of 20 Mega Btu/hr capacity each, or less, the following is recommended:

(*a*) Positioning controls.

(*b*) Separate actuators on fuel and air.

(*c*) Manual fuel-to-air ratio controllers.

(*d*) For systems having generators of more than 20 Mega Btu/hr capacity, the following should be used:

(*e*) Metering controls.

(*f*) Fuel and air actuators linked for tandem operation, where physical location permits.

Information Handling Services, 2000

(g) Automatic fuel-to-air ratio controllers. Safety devices and limiting switches will be interlocked for low water flow, high temperature, and high pressure at each generator. Good practice dictates a redundancy of sensing elements; that is, even though a sensor is signalling a generator's discharge water temperature to a controller, a different sensor will be used to indicate high limiting temperature.

(2) To aid pollution control and energy conservation, closer control of fuel-air ratio is evolving. Research on current methods will be made prior to final selection of controls.

4-4. PRESSURIZATION SYSTEM

a. Criteria for Selection of Pressurization Method. The following criteria for selection will be used:

(1) Collapse of pressurization must be avoided when system is in operation.

(2) Water must be kept free of oxygen.

(3) The control of pressurization must be simple.

(4) Waste of compressed inert gas must be avoided.

(5) System should minimize fluctuations in HTW system pressure and outgoing temperature of water from generator.

(6) System should provide for a modulating control of firing rates.

(7) Maintenance of pressurization should be easy and minimal.

(8) Installation and operating costs should be low.

(9) Proper utilization of safety devices should be assured.

b. Steam-Pressurization. One type of steam pressurization is acceptable, that is a separate expansion vessel. This system has the forced circulation hot water generators connected to a separate expansion vessel. System water is drawn from the expansion vessel for supply to the pumps. Water in the expansion vessel is allowed to flash into steam to maintain sufficient pressure on the entire system. Sufficient net positive suction head must be maintained to prevent flashing at the eye of the pump.

c. Inert Gas-Pressurization. Two methods of inert pressurization are acceptable.

(1) Separate expansion vessel, variable gas quantity, constant water quantity. This system includes a high and low pressure gas receiver, compressor, and necessary control valves. As water expands, the control valves open at a preset point allowing the inert gas to relieve to a low-pressure receiver. A compressor picks up the gas in the low-pressure receiver and compresses it into a high-pressure receiver for storage. As water contracts, the control valve closes and the gas supply valve opens to permit the required increase in gas quantity.

(2) Separate expansion vessel, fixed gas quantity, fixed water quantity, variable pressure. As water expands, inert gas is compressed, increasing system pressure. As water contracts, system pressure is decreased. Although system pressure is allowed to fluctuate, the pressure is never allowed to drop below saturation pressure. The need for keeping the expansion vessel within reasonable size and for avoiding pressures in excess of the rating of fittings, piping, and heat exchangers usually limits the size of such systems.

d. Sizing the Expansion System. The expansion system is sized to take the volume fluctuations at operating conditions. It is impractical to try to size an expansion system for HTW based upon cold conditions, as too large a volume change takes place. The expansion system must, however, include reserve capacity for some sludge buildup and pump supply of 30 seconds for each circulating pump (both boiler and system on separate pump systems).

(1) Steam-pressurization makes use of a large, horizontal expansion drum with a steam chest in the upper void to impose saturation pressure on the system. Generator discharge water is taken to the drum supply water to the distribution system is taken from the drum so that drum water is the hottest in the system with the highest vapor pressure. The saturation pressure corresponding to the highest drum water temperature is the system pressure. Consequently, system operating pressures are the very lowest possible. Inert gas pressurization of the void space of the expansion drum at about 40 psig above saturation pressure will assure stable operation and prevent flashing with changes in system volume demand. With inert gas pressurization the expansion drum can be smaller and set vertically at grade level. In some cases the use of inert gas pressurization will result in increasing the system pressure so that valves and fittings would be heavier and costlier and require added surveillance and maintenance of the pressure control system by the operating personnel.

(2) Draining and filling connections must be provided so that the expansion vessel and the connecting lines can be completely drained and completely filled with water after a shutdown. Vents are necessary at all the high points of both the

Information Handling Services, 2000

tank and piping to permit purging of any trapped air. A single tank is preferred on the basis that it is the most economical installation. If the volume variation cannot be practically handled in one tank, two, or a maximum of three tanks may be used. These tanks must be equipped with equalization nitrogen and water lines to permit adjustment of water level and pressure differences between tanks. Provision must be made for filling and draining the expansion drum. Suitable water level controls may be installed to provide for overflow if the water level gets too high and for manual or automatic supply if it should get too low. The overflow connections must be equipped with a single or double manual shutoff valve and may be equipped with a cooler or a cold water mixer to eliminate flashing and increase the capacity of the line. Large quantities of water should be drained only through double sets of blowoff valves in case one should fail to seat. Makeup and emergency feed connections to the system will have nonreturn type valves such as check valves to prevent system pressures from being imposed on equipment when not in service. Safety valves must be installed in the steam space for the full generator capacity connected to the expansion drum. These should be set according to the practice of setting boiler safety valves. Purge or vent valves need not be larger than 1½ inches. Saddles and supports for horizontal expansion tank must be designed to permit movement due to thermal expansion of the tank and to support a weight of 1½ to 2 times the weight of the tank and its contents. Pressure gauges are required at the top of the tank, and thermometers should be located at several levels of the expansion tank, usually at ⅓ points of vessel. A long gage glass is needed to follow the water level. Leaving a nitrogen cushioned expansion tank uninsulated should be considered so the tank will radiate and operate at a lower temperature. The inclusion of a heat trap loop in the expansion line is always desirable if space permits as this will aid in preventing heat migration from the return piping into the water in the tank.

4-5. PUMPS

Single-stage centrifugal pumps are used to circulate high temperature water through the distribution system and through the generator or through both the distribution system and the generator, depending upon the type of circuit selected for the HTW system. Pumps selected for this service must be designed especially for high temperature water to secure efficient, reliable operation with a minimum of maintenance. Standard pumps for this application have capacities ranging from 100 to 2000 gpm, with heads up to 250 feet of water. The head characteristic of circulating pumps should be flat in order to deliver nearly constant head throughout the range of operating capacities. At the same time the maximum head should occur at shutoff and should fall off gradually up to maximum gallonage, with a decrease in pressure no more than about 15 percent below the shutoff pressure at the maximum operating gallonage. Pumps operating in parallel will carry more or less their proper portion of the capacity when the pump characteristic has a continuous drop of 10 to 15 percent. Circulation pumps are located in the supply line of the system to maintain the highest possible positive suction head. To further improve efficient operation of these pumps, a mixing connection is provided so that a portion of the system return water mixes with the water from the generator thus lowering its temperature to avoid the danger of flashing at the pump suction. The suction intake of high temperature water pumps must be carefully designed to avoid sudden changes in velocity or direction which might contribute to flashing and inefficient operation. With nitrogen cushioned systems any pump suction rumbling (flashing) can be quieted simply by raising the pressure slightly (insuring that the expansion line connection is as close to the pump suction as possible also helps). This cannot be done with a steam cushioned system as no means to increase the pressure other than raising the water temperature exists. Pumps which have split casing with an axial suction and upward discharge are preferred. Adequate water cooling must be provided for all pumps. Drip water and cooling water should have drains near the pump and the drains should be visible. Mechanical seals are recommended after the pump has had a "run-in" period of a few months. This gives the system water time to become stabilized and most dirt will be out of the system. Mechanical seals will be selected to suit each pump manufacturer's recommendation and installed accordingly. Mechanical seals provide for less maintenance and elimination of packing leakage. Each pump should be direct-connected to its motor on a common cast iron or structural steel base. When individual generator circulation pumps are used, one pump must be provided for each generator. The head under which these pumps must operate, as well as the capacity, is determined by the generator requirements. These pumps take their suction from the return water line. Systems having a number of zones should have the total capacity of the zones subdivided for several pumps of equal capacity to avoid operation of pumps at low efficiencies rather than having one pump for each zone. A common

Information Handling Services, 2000

pump discharge header then supplies the zones. The operating head of the system circulation pumps must be sufficient to handle the calculated pressure drop through the complete circuit which the pump serves. This includes the pressure drops through valves and piping in the heating plant, the distribution system, and the heat-consuming equipment. In case the system circulation pumps also serve to circulate the water through the generators, the pump head must also be sufficient for the generator circuit. Provide multiple pumps in parallel so that when one pump is inoperative the remaining pumps will have capacity to provide 100 percent flow. Yoke mounted pumps should be avoided. Use of centerline mounted pumps exclusively will avoid associated expansion problems. Variable speed pumps should be considered for system pumps in a dual pumping arrangement. Constant speed (volume) pumps will be used with forced circulation HTW generators as they required a constant flow, minimum 90 percent of design or 100 percent of the flow required by the manufacturer of the boiler installed, whichever is greater, (only return water temperature will vary with load). The water flow element must be located in the return line to the generator and in piping straight runs to insure an accurate reading. Flow switches will be included to prevent startup if flow has not been established and will take the unit off line should the flow drop below the minimum rate. The pressure loss of the bypass valve and associated piping should be as close to that of the HTW generator loop to insure that the circulating pump operates on its curve under any condition.

a. Dual-Pump Systems. Dual-pump systems have generator circulating pumps and system circulating pumps. The generator circulation pump draws water from the return system and delivers it directly to the generator inlet header. These pumps must be designed to circulate the quantity of water specified by the manufacturer against the head required to overcome the resistance of the generator plus the connecting piping and fittings. The quantity of water circulated through each generator is therefore kept more or less constant regardless of the generator firing rate. The system circulation pumps are designed to circulate the quantity of water determined by the heat load of the heat users and the design temperature drop between the supply and return lines against the total resistance of this circuit. There need be no relationship during operation between the quantities of water circulated by the system pumps and the generator circulation pumps in this arrangement. With this dual pump arrangement no instruments and other equipment are needed to control the flow through the generator because the circulation pumps have a constant capacity and are entirely independent of the system circulation. The only safety devices required to protect the generators of this system are the generator pressure differential control and a thermocouple control which safeguards the tubes against excessive temperatures.

b. Single-Pump Systems. Single-pump systems have one set of pumps which circulate water through both the system and the generators. The circulation pumps must have sufficient head to circulate water first through the system and subsequently through the generators. The water volume of either the generators or the system will determine the capacity of the pumps, depending upon which is greater. The water volume of the system will vary with the head load and the temperature drop between the supply and return temperatures, since the heat users throttle the flow of high temperature water to adjust to changing heat requirements. The volume of water circulated through the generators may be allowed to vary, but to protect the generator tubes from overheating it must never be allowed to fall below the minimum amount required to guarantee proper distribution of flow through all the water circuits of the generator. A generator flow meter or other device which indirectly indicates the flow is required to operate and automatic bypass valve which assures adequate volume of water to the generators at all times. This bypass valve is sized for the minimum flow required at the generators.

4-6. MAKEUP WATER TREATMENT

HTW systems are closed systems and, therefore, makeup is limited to the extremely small amount of leakage which occurs at pump glands and valve stems. Additional makeup is required for filling lines or equipment which are drained. When makeup is small, accumulation of salts and other impurities in the generator is so slow that generator blowdown, another cause of losses, is hardly ever needed. The makeup water requirements even in the largest systems should not exceed 200 to 1000 gal. per day.

a. External Treatment. All makeup water introduced into the HTW system must be filtered to remove suspended matter and treated to remove hard elements of calcium and magnesium, and must be oxygen free. A demineralized unit is usually not required. The calcium and magnesium will be removed by a water softener. The softening operation is performed by filtering makeup water through a bed of ion-exchanger material common-

Information Handling Services, 2000

ly called "zeolite." At intervals determined by the amount of water used for makeup, the zeolite material must be regenerated by backwashing with concentrated salt brine solution. Capacity of the system is normally in the range of 15 to 20 gal. per min. The water softening system should consist of dual zeolite tanks, a brine solution tank, manually operated multiport control valve, bell alarm water meter, and water distribution manifold. This water softener system may need to be supplemented for the initial fill requirements when raw water conditions are poor. The initial fill should be relatively free of oxygen. Any remaining oxygen should be scavenged with sodium sulfite or similar treatment.

b. Analysis of Water. Analysis for control of water is essential in HTW systems to prevent the formation of insoluble deposits of scale within the generator tubes and other parts of the system and to prevent corrosion and deterioration. To provide a system with the greatest resistance to corrosion and chemical attack economically possible, a relatively high level of alkalinity is maintained in the system water. Tests have shown that iron is least soluble at a pH of 9.3 and that corrosion of iron increases rapidly as the pH falls below 9.3. To assure maximum protection it is recommended that a pH of 9.3 to 9.9 with zero hardness and zero oxygen be maintained. The services of a competent water specialist should be used for the primary and secondary water circuits on a regular schedule to sample, analyze system water, and make recommendations for corrections, if necessary.

c. Storage Tank. A treated water storage tank will be provided for emergency pumping requirements. This tank is usually sized for approximately 20 minutes pump demand. It is advisable also to provide a means of heating the treated water to at least 210 degrees F. to avoid cold shock to the system.

4-7. INSTRUMENTATION

Instrumentation serves the following necessary functions: records and indicates vital factors such as water flow, temperatures, and pressures which are essential to the operators; provides supervisory check readings and information for determining efficiency of operation; assures maximum utilization of total plant; and provides monitoring of emission controls. The minimum instrumentation requirements will be reviewed with current emission monitoring requirements of EPA or state or local codes.

a. Generator Panel. The minimum instrumentation for each HTW generator should be mounted on a generator panel and, where applicable, should include the following:

(1) Multipoint draft gage, 4 points with mechanical ash collector, 3 points without mechanical ash collector (varies with fuel).

(2) Water flowmeter and recorder with 3-pen circular chart:

(*a*) *Water flow.*

(*b*) Outlet water temperature gage.

(*c*) Return water temperature gage.

(3) Recorder with 2-pen circular chart:

(*a*) Combustion air flow.

(*b*) Flue gas temperature.

(4) CO_2 meter and recorder with 1-pen circular chart.

(5) Smoke density indicator and alarm.

(6) Individual inlet and outlet water pressure gages.

(7) Stoker grate temperature multipoint indicator (solid fuel-fired generators only).

(8) Opacity monitor.

b. Master Control Board. A master control board with annunciating alarm panel should be provided to include the following:

(1) Expansion drum pressure gage.

(2) Zone distribution meters and recorders with 3- or 4-pen circular chart:

(*a*) Water flow rate.

(*b*) Water temperature in.

(*c*) Water temperature out.

(*d*) Expansion drum pressure (on first zone only).

(3) Expansion drum water level indicator.

(4) Annunciator with illuminated windows and horn to indicate the following:

(*a*) Overflow.

(*b*) Low level.

(*c*) Low level cutoff.

(*d*) Generator low flow (one for each unit).

(*e*) Burner low pressure (each oil burner when used).

(5) Indoor and outdoor thermometer.

(6) Electric clock.

(7) Circulating pumps status lights.

(8) Excess water temperature annunciator point.

(9) Low expansion tank pressure (inert gas pressurized systems).

(10) Makeup pump status lights.

Information Handling Services, 2000

c. Additional Features. Fault finders and annunciators are available which will aid the operator in determining which limit has caused a "fail to operate on demand" condition or an inadvertent shutdown. Because of the high costs of installation and maintenance during operation, the benefit to this installation should be analyzed before including in the design.

4-8. POLLUTION CONTROL

Pollution control will conform to the latest requirements of EPA or the state or local codes, whichever is more stringent.

Information Handling Services, 2000

CHAPTER 5

CONVERSION AND UTILIZATION

5-1. POTENTIAL USERS OF THE SYSTEM

The design of building distribution circuits includes the arrangements for bringing high temperature water supply and return lines into each building, locating equipment in the equipment rooms, and designing suitable heat exchangers, control systems, and auxiliary piping such as circulation systems, drains, vents, and bypasses. In general, branches are taken off the high temperature distribution lines to serve one or more equipment rooms in each building. For space heating and process applications, heat exchangers or converters are required to transfer the heat from the high thermal potential of the high temperature supply water lines to the lower temperature levels of the spaces and equipment requiring heat. Heat will be transferred directly by radiation and convection only with special approval otherwise may be indirectly by radiation and convection, or indirectly by the circulation of secondary heating media such as air, water, or steam. Suitable control equipment is required so that the desired temperature levels can be maintained under varying heat loads.

5-2. BUILDING SERVICE

At the point where the HTW supply and return lines enter a building, shutoff valves are required. For maximum accessibility and convenience, locate them inside the building in the mechanical equipment room nearest to where the service lines enter the building. The lines beyond the shutoff valves must be drained if there is danger of freezing due to long periods of shutdown. A minimum circulation must continue when none of the heat exchangers require heat. For this reason, a bypass line equipped with a ¾-inch gate valve should be installed at the entrance to each equipment room ahead of the shutoff valves.

5-3. LOCATION OF EQUIPMENT

Heat exchangers or converters may be located either in an equipment room or in an open basement since a special room is not essential. If the individual buildings are very large or extensive, such as hospitals and research laboratories, it may cost less to distribute the heat exchangers throughout the building serving them from main HTW headers. In laying out the equipment spaces, sufficient space must be provided for the removal of HTW coils, especially if the low temperature heat carrier is expected to form scale or other deposits. Since the HTW will not foul, scale, or corrode the piping through which it passes, no provisions are needed for cleaning this circuit.

a. Heat Exchangers. Figure 5-1 shows a simplified subcircuit including the various types of converters commonly used in district heating applications. Steam generator, domestic water converter, and hot water converter use steam or water as secondary heat carriers. All of the converters are arranged in parallel between the supply and return lines of the HTW system.

Information Handling Services, 2000

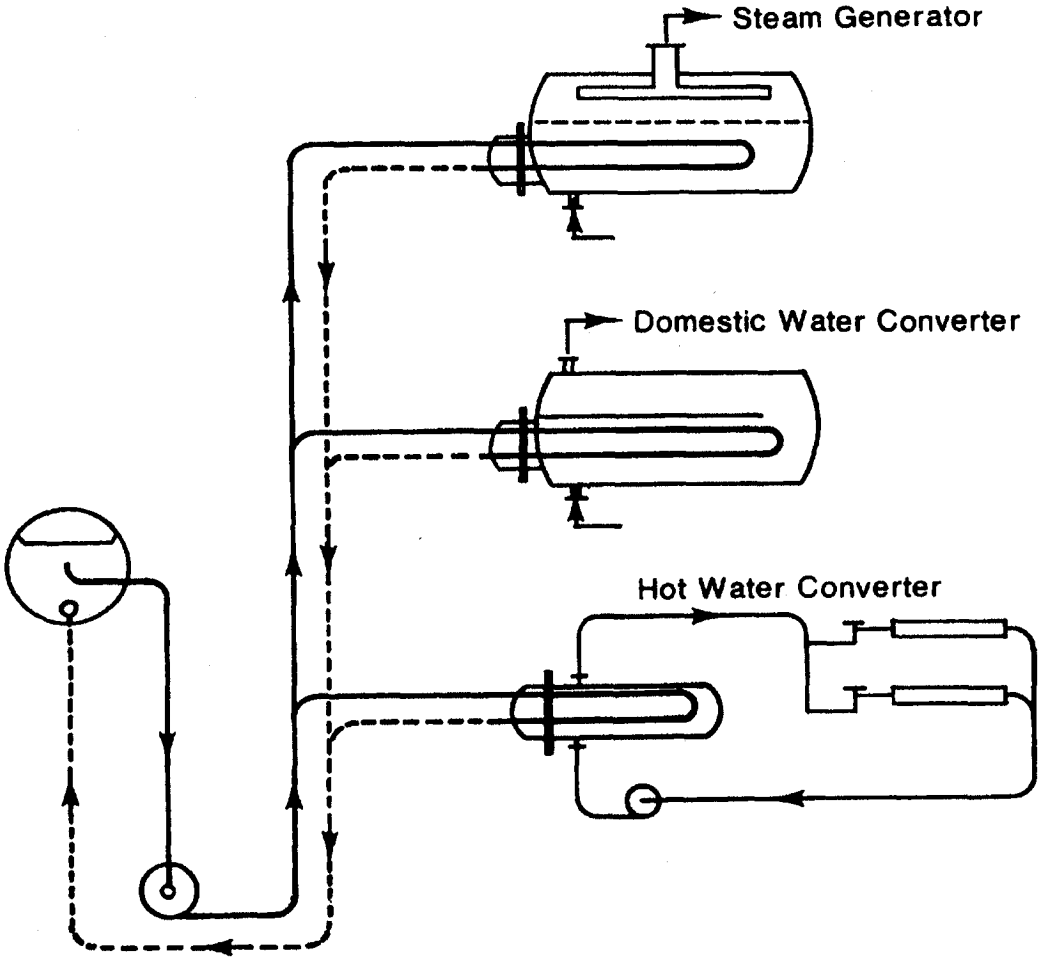

U.S. Army Corps of Engineers

Figure 5-1. Various Heat Converters.

b. Piping. It is most convenient to locate most of the piping connecting converters and heat exchangers above rather than below the equipment with risers and downcomers serving the various pieces of apparatus. This arrangement keeps the piping up and out of the way making it easier to fulfill the venting and draining requirements. Vents and air bottles must be located at all the high points in the piping, and drains and filling connections must be provided at the low points to facilitate maintenance of the equipment. No piping should be located in the space reserved for removing the tube bundles. The disconnection of a pair of flanges in the HTW lines must permit removal of the tube bundle. If walls or windows are located close to the tube bundle, removable sections must be provided to permit removal of the bundle. Piping distributing the secondary heat carriers should be designed in the conventional manner as recommended by ASHRAE Handbook.

c. Valves. Each heat exchanger using HTW requires at least one supply and one return shutoff valve to permit maintenance. In addition, an automatic control valve in the return is usually required with provision for its removal or replacement. Figure 5-2 shows three types of heat ex-

Information Handling Services, 2000

changers commonly used. HTW connections and controls are basically the same for all three types. Shutoff valves may be either gate or plug valves. A balancing valve, either a globe or plug, also is installed ahead of the return shutoff valve so the subsystem may be balanced to avoid short circuiting or excessive flow of supply water when control valve drives to full open position. The control valves are operated by thermostats or pressurestats which actuate the valves through a positioner using electric, electronic, or pneumatic modulation. Control devices sensing secondary media temperatures must be selected to provide flow and positive shutoff when required under all conditions of operation. Controls will be located in return since this reduces or eliminates flashing of the water flowing through the valve, provides better control characteristics, and prevents plug erosion caused by high temperature water flashing to steam at lower discharge pressure. Control valves in HTW supply are not recommended. Control valves of the three-way type or three-way pressure controls which bypass hot water around the converter should not be used. They can easily deprive the other circuits of flow and produce high return temperatures and excessive pump loads thereby lowering the overall efficiency of the system. Bypass globe valves of the same size as the control valves are provided around the control valves. The shutoff valves must be located so as to permit maintenance of the control valves as well as of the heat exchanger. To assure no short circuiting and loss of heating capacity, great care should be taken that flow is assured to all heat exchangers at all times: for this reason, piping and valving must be sized carefully and branch lines leading to individual heat exchangers should be taken off common headers. In the case of air heaters used to heat outside air, if the control valve is tight-closing a bypass with a ½-inch globe valve must be provided to maintain enough circulation at all times to prevent freezing of the water in the coils. The construction of valve seats and plug contours will be carefully selected to minimize erosion in HTW piping.

Information Handling Services, 2000

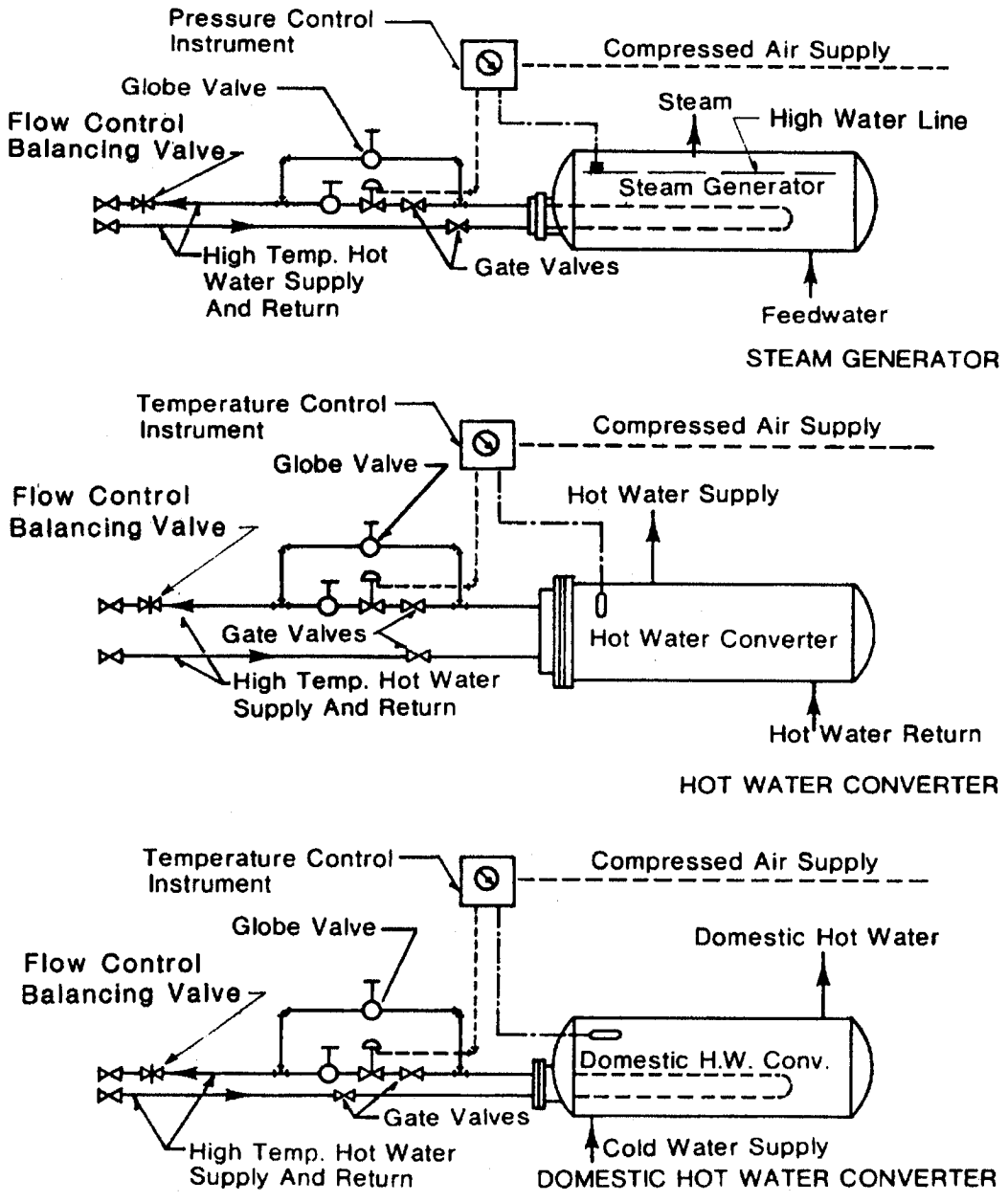

U.S. Army Corps of Engineers

Figure 5-2. Heat Exchangers and Control Valves.

d. Flow Control. Provisions shall be made in the HTW subsystem so accurate balancing can be achieved. Control of flow to individual systems to avoid excessive flow and short circuiting is very important. The continual checking of the flows cannot be overstressed to the designer. Flow must be controlled by the plant operators and must be kept in their jurisdiction.

e. Temperature Gages. Gages will be provided on the supply and return lines to each piece of HTW equipment. Gages allow a quick visual check of the temperature differential and an indication of unbalance in the system if differential is below

Information Handling Services, 2000

design. Design differential will be posted near the equipment or kept on file at plant operations.

5-4. DESIGN OF HEAT EXCHANGERS

a. Standards. Heat exchangers using HTW are best classified according to their secondary mode of heat transfer since they all circulate high temperature water in the primary circuit. Heat may be transferred in the secondary circuit by direct radiation, by radiation and convection to air, by convection to water or to steam. Each heat exchanger must be designed to deliver a specified amount of heat per hour which represents the maximum design heating load to which it is connected. It must have sufficient area to deliver this amount of heat with specified velocity and entering and leaving temperatures of the primary HTW to the secondary heat carrier under specified conditions and in the case of convection, with specified circulation. The film coefficients of heat transfer by convection or radiation may be determined by suitable formulae available in the standards of equipment manufacturers. Fouling factors may be included when fouling or scaling of the secondary heat transfer surface will occur over a period of time. No fouling factor need be applied to the HTW side since this closed circuit is not subject to fouling, scaling, or corrosion. The specified supply temperature of the HTW circuit is determined from the design supply temperature leaving the generator plant less a proper allowance for heat losses in transmission, usually about 4 to 8 degrees per mile. The return HTW temperature for each piece of heat transfer equipment may generally be specified as between 10 to 20 degrees higher than the outlet temperature of the secondary heat carrier for peak load. For very large heat exchangers, temperature crossing is practical. The flow rate of HTW through the heat exchangers is determined by the heat load and the design supply and return temperatures of the primary circuit. The physical arrangement of HTW heat exchangers must be carefully considered to be certain that it complies with the special requirements of this heat carrier. In general, the coils must be horizontal to permit draining and venting, and must not permit bypassing or short circuiting of the water from inlet to outlet or permit stratification to occur. The coils or tubes of HTW heat exchangers should be made from cupro-nickel, stainless steel, or Admiralty metal. Most available material is 90-10 cupro-nickel which is good for normally expected pressure and temperatures. Other cupro-nickel such as 70-30 or 80-20 is available on special order. Stainless steels are used for higher pressures. Bronze and brass are not suitable for this service. In all shell and tube heat exchangers, the high temperature water will be in the tubes and lower temperatures and pressure medium in the shell. The thickness of the shell and the gage of the tubes must be sufficient to carry the required pressures; extra thickness is not required to allow for corrosion. The tubes or coils will always be arranged as multipass so that nearly equal velocity occurs through all the tubes of all passes. The overall pressure drop on the shell or coil side should generally not exceed 7 feet of water. Coils must be removable through a flanged opening and be accessible for rerolling of the tubes in the tubesheets. The coils should be capable of being cleaned on the outside mechanically or chemically and on the inside by chemical means only since accumulations are hardly ever found on the surfaces contacted by high temperature water. It is very important to realize that the economy of the entire installation depends to a great extent upon the design of the heat exchangers. It is generally cheaper to increase the heat exchanger surface area than to increase pipe sizes and pump capacity. It is important that a serious effort be made to reduce return temperatures of the HTW as much as feasible since this determines the pump capacity and pipe sizing as well as transmission losses. High pressure drops through the exchangers and their valving and piping are also uneconomical although a certain minimum must be allowed for good balancing and operation. A 40-foot total drop is considered a good design parameter. Water coil velocities should be at least 4 feet per second (fps) and not exceed 8 fps.

b. Radiant Coils and Panels. HTW may be used directly with special approval in radiant coils and panels when they can be mounted more than 15 feet above the floor. Radiant coils and panels are especially desirable since comfort conditions can be obtained at lower room temperatures than those required for convection heating. This is a particularly advantageous method for heating warehouses, factories, hangars, and other areas which have high ceilings or roofs. The disadvantage is that close temperature control is difficult. The panels or coils must be carefully distributed to produce uniform radiation throughout the spaces to be heated. The return water temperatures from radiant coils and panels depend upon the heat load, the effective radiant area, the room temperatures, and the mean coil temperature; they should be kept as low as possible, as pointed out above, without requiring excessive surface area. When coils are located in floors and walls, lower surface temperatures are required and HTW cannot be used directly. In this case, heat exchangers may be

Information Handling Services, 2000

used to transform the heat to lower temperature levels. The heat radiated by HTW coils may be regulated to suit demand by throttling the flow through the coil which reduces the mean temperatures of the coils.

c. Forced Circulation Hot Water Converters. Forced circulation hot water converters are required to produce lower temperature hot water for space and process heating. The use of circulating hot water for building heating is preferable to the use of steam when HTW is used as the primary heat carrier. Not only is greater comfort and easier control achieved, but also a more economical arrangement results since lower return HTW temperatures are produced. The distribution of the low temperature water may be designed in the same way as conventional forced circulation hot water systems. Such a design would require a circulating pump, a mixing valve controlled by inside or outside temperatures, zone control valves, conventional convectors or radiant panels, and an expansion tank to take care of variations in the volume of water in the system with temperature. The heat exchanger required for this application should be the multipass type on the HTW side and should be well baffled on the secondary circuit to prevent short circuiting of the lower temperature water. Relief valve or valves installed on the shell to relieve pressure should be sized with added capacity should the control valves on the HTW side fail.

d. Large Domestic Hot Water Converters. Storage type domestic hot water converters are used for heating cold water to about 140 to 180 degrees F. Converters for this application are similar to those used with forced hot water circulation. Baffles may be installed in the shell to prevent bypassing of the entering cold water to the outlet connection and stratification of water in the tank. Throttle controls are required to vary the flow of HTW to maintain a constant temperature of the domestic water in the upper portion of the tank.

e. Steam Generators. Steam generators can be used to raise steam at any desired pressure, limited only by the temperature of the HTW available to the converter. Slightly wet steam is produced unless provision is made to eliminate the entrained water. A steam separator built into the steam space of the converter and suitable water level control are necessary for these converters. Automatic condensate return to the steam generator is practical, but care must be taken that the control should not deliver more than the necessary amount of fresh makeup water to the generator. A condensate pump and condensate tank are required when a two-pipe steam distribution system is used, but may be eliminated, of course, in single-pipe systems of the gravity type or in systems which waste the steam. The control valve throttles the flow of HTW in the primary circuit and is operated by a pressurestat connected to the steam chamber of the converter. A safety valve is required to relieve pressure in the shell should the controls fail to operate properly.

5-5. CONTROLS

a. General. Control of temperature within close limits is an important factor in all heating installations, comfort and process, both for proper functioning of the equipment and for best economy. Considerable savings in fuel can be achieved by controls which adjust the consumption of the heating medium closely to the heat demand. For this reason, the cost of proper controls is usually easily justified from the fuel savings alone. Automatic controls must be selected carefully to suit the application. This is particularly true in the case of HTW controls due to the great heat potential of this heat medium. Controls for HTW equipment generally receive their control impulses from a thermostat or pressurestat located where they correctly indicate the temperature or pressure of the secondary heating medium. Great care must be taken not to locate thermostats in stagnant regions where they could give false readings. Control valves should be the two-way single seated type. There are two types of controls which can be operated either electrically or pneumatically; on-off controls and modulating controls.

b. On-Off Controls, Quick-Opening Valves. When the load is fairly constant, and when wide temperature differentials may be permitted, on-off controls are often satisfactory. On-off controls may cause serious water hammer, so their use should be restricted to small units and to short runs of pipe. Quick-opening valves are not suitable for the close temperature control required for hot water heaters or domestic hot water converters or for the close pressure control required for most steam producers. Regulating valves suitable for use with this type of equipment must be of the modulating type.

c. Modulating Controls. Modulating controls in general are far more satisfactory than on-off controls, but they cost considerably more. Their use is always justified, however, by the better control and higher economy which they produce. A modulating control assembly will consist of a thermostat or a pressurestat, a control instrument, and a control valve. The thermostat or pressurestat may transmit its impulse to the instrument by gas, vapor, or liquid pressure or by electrical impulse. The impulse from the instrument to the control

Information Handling Services, 2000

valve also may be transmitted by gas, liquid, or electricity. The control valve itself in general should be designed with an equal percentage flow characteristic. Valve positioners are preferable for all valves 2 inches and larger if the distribution pump pressure head is in excess of 100 psig. The valves must always be arranged to be closed against the impulse of the instrument so that the controls will close automatically should the impulse from the instrument fail. Control applications where the pump pressure is more or less constant may use controls with narrow ranges of only 10 percent band widths and without any reset. Based on present experience applications where the inlet pressure of the valve varies widely due to the fluctuations in load, instruments with band widths up to 150 percent and with automatic reset will provide a safe control. Exact sizing of the valves in accordance with available pressure drop is essential and it is recommended that a pressure differential of 20 feet of water should not be exceeded.

Information Handling Services, 2000

APPENDIX A
REFERENCES

Government Publications

Departments of the Army and the Air Force

TM 5-810-1	Mechanical Design—Heating, Ventilating and Air Conditioning
TM 5-811-7	Electrical Design, Cathodic Protection

Non-Government Publications

American Society of Heating, Refrigerating, and Air Conditioning Engineers (ASHRAE), 1791 Tullie Circle NE, Atlanta, GA 30329

Handbook, Equipment, 1988
Handbook, Fundamentals, 1989
Handbook, HVAC Systems and Applications, Chapter 15, 1987
Handbook, Refrigeration Systems and Applications, 1990

American Society of Mechanical Engineers (ASME), 22 Law Drive, Box 2300, Fairfield, NJ 07007-2300

Boiler Pressure Vessel Code (1989)

B31.1—1989	Power Piping
B31.3—1990	Chemical Plant and Petroleum Refinery Piping

Underwriters Laboratories, Inc., 333 Pfingsten Road, Northbrook, IL 60062

773-75	Oil-Fired Air Heaters and Direct-Fired Heaters, Third Edition, 14 August 1985
795-73	Commercial-Industrial Gas Heating Equipment, Third Edition, 13 July 1989

Information Handling Services, 2000

APPENDIX B

SAMPLE CALCULATIONS FOR DATA GIVEN IN CHAPTER 2

B-1. Heating load and distribution system

First the heat requirements throughout the distribution system are tabulated; then system pressures and temperatures are determined. In this example system the heating load is 80 percent of the total load. $T_s - T_r$ is then selected at 150 degrees F. T_r averaged 240 degrees F. following the procedure set forth in subparagraph 2.12.a. The supply temperature T_s is

T_r = 240 F.

+ 150 F.

T_s = 390 F. + allowance for loss (40 degrees F.) = 430 degrees F. The system supply is selected at 440 degrees F. at the generators.

T_r = 440 − 150 = 290 degrees F.

B-2. HTW generator selection

Using the following requirements the basic calculations are performed.

Maximum Initial Load (Q_t)=120,000,000 Btu/hr
Future Anticipated Load=40,000,000 Btu/hr
Maximum Ultimate Load =160,000,000 Btu/hr
Essential Load =55,000,000 Btu/hr
Flywheel Factor =0.85
Temperature Supply (Ts)=440 F.
Temperature Return (Tr)=290 F.
Average Temperature Drop=150 F.
Volume in Ultimate System=4,000 cubic feet

Use two 55,000,000 Btu/hr units initially; one down will provide essential load. Add one 55,000,000 Btu/hr unit in future. Generator circulation requirements are based upon average system temperature differential.

T_s = 440 F. = 418.9 Btu/lb (enthalpy)

T_r = 290 F. = *259.31 Btu/lb*

Δh = 159.59 Btu/lb

55,000,000/159.59 = 344,630 lb/hr, based on essential load.

B-3. Circulating pump selection

Two generator circulation pumps are selected for this flow requirement with head based upon resistance through generator and associated piping for two-pump systems. For single-pump systems, pumps must provide this flow as a minimum condition; pump head requirements would be the above resistance added to system resistance. Distribution system circulation, pumps, and pipe size, requirements are based upon average system temperature differential.

120,000,000/159.59 =751,927 lb/hr, based on maximum initial load.

40,000,000/159.59 = 250,642 lb/hr, based on future anticipated load.

If the distribution system design is for a two-pump system the best selection would be three pumps plus one spare based upon the 250,000 lb/hr. If the design is for a single pump system, then the best selection would be two pumps plus one spare based upon the 344,630 lb/hr for the boiler. Pipe sizes for the mains in the circulating loop and at the manifolds for the pumps and generators should be sized for maximum future load. This type of analysis should be made for every system to assure that adequate pumping capacity is provided. For this example a single pump system is selected.

B-4. Expansion vessel design

The first step is to determine the system expansion volume as outlined in subparagraph 2.12.c(1):

T_s = 440 F.

T_r = 290 F.

V_{f1} = specific volume at 440 F. = 0.01926

V_{f2} = specific volume at T_s − 10 percent = 400 F. = *0.01864*

$V_{f1} - V_{f2}$ = 0.00062

Utilizing Equation (2-9):

$\Delta V_s = (V_{f1} - V_{f2})/V_{f2}$] 100 = (0.00062)(100)/0.01864 = 3.3 percent change in supply system water.

This establishes the operating range between 400 degrees F. and 440 degrees F. This 40-degree differential is applied to T_r to obtain the minimum return temperature.

V_{fr1} = specific volume at T_r = 290 F. = 0.01733

V_{fr2} = specific volume at minimum return = T_r − 40 F. = 250 F. = *0.01700*

$V_{fr1} - V_{fr2}$ = 0.00033

Utilizing Equation (2−10):

$\Delta V_r = [V_{fr1} - V_{fr2}]100/V_{fr2}$ = 0.00033/0.01700 (100) = 1.9 percent change in return system water.

From Equation (2-11):

V_t =total system expansion volume = ΔV_s + ΔV_r/100 (system volume)

Information Handling Services, 2000

V_1 = 3.3 + 1.9/100 (4000) = (0.052)(4000) = 208 cubic feet.

Steam expansion vessel design follows data in subparagraph 2.12.c.(2):

V_1 = 208 cubic feet per calculations above.

V_2 = ½-minute reserve for pumps based on the maximum initial load plus the essential load which is the circulating load through the boiler in this single-pump system:

= 344,630 + 751,927 = 1,096,557 lb/hr or:

V_2 = (1,096,557)(0.0183 ft3/lb)(½ minute)/60 minutes = 167.2 cubic feet where specific volume is selected for average of T_s and T_r

=440 + 290/2 = 365 F.

V_3 = 0.2(V_1 + V_2)

= 0.2(208 + 167.2) = 75.04 cubic feet.

Allowance for level controls = (tank diameter)(length)(1 ft). Assume largest practical diameter = 8 ft and use 150 cubic feet nominal allowance.

From Equation (2-12):

Required nominal volume = V_1 + V_2 + V_3 + control allowance = 208 + 167.2 + 75.04 + 150 = 600.24 cubic feet.

Length required = 600.24/π D^2/4 = 600.24/(0.7854)(64) = 1.94 tank length in feet .

These proportions are not good, therefore assume tank length of 25 feet. Then 600.24 = 0.7854 D^2(25): D^2 = 30.57, D = 5.53 feet. Use tank with 6-foot inside diameter. Volume for controls = (6)(25)(1) = 150 cubic feet, which checks with the minimum recommended.

Total volume of tank = $(6)^2$ π (25)/4 = 706.86

Required computed volume = 600.24

Net volume available for sludge = 106.62 cubic feet. ASHRAE recommendation = 40 percent (V_1) = 0.4(208) = 83.2 cubic feet. Therefore, tank sludge capacity is adequate.

Information Handling Services, 2000

APPENDIX C

EXAMPLE DISTRIBUTION LAYOUTS

Selection of a distribution layout will depend upon the particular terrain and the need, if any, for separation of consumer loads. Several example layouts are illustrated.

Figure C-1. In this arrangement balancing of the system is easily accomplished and pressure differentials at all building connections are nearly equal.

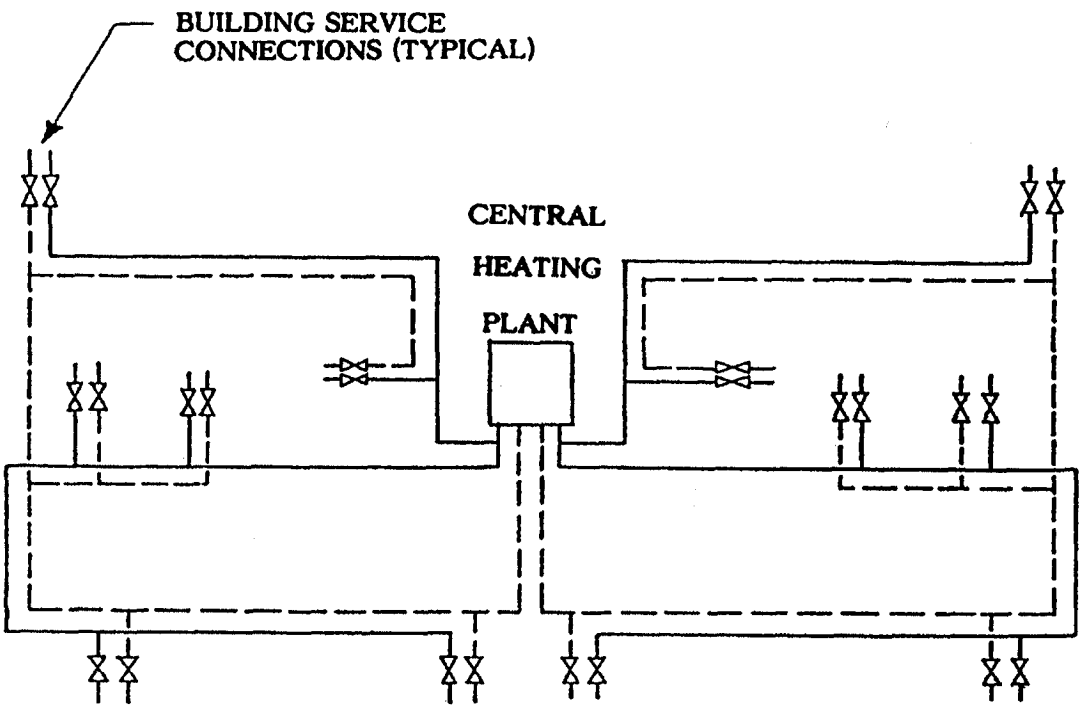

Figure C-1. Direct Supply, Reverse—Return.

Information Handling Services, 2000

Figure C-2. In this arrangement a number of individual circuits are used. Control valve sizing is not as difficult as with direct supply, single circuit (not shown) where pressure at each connection is different.

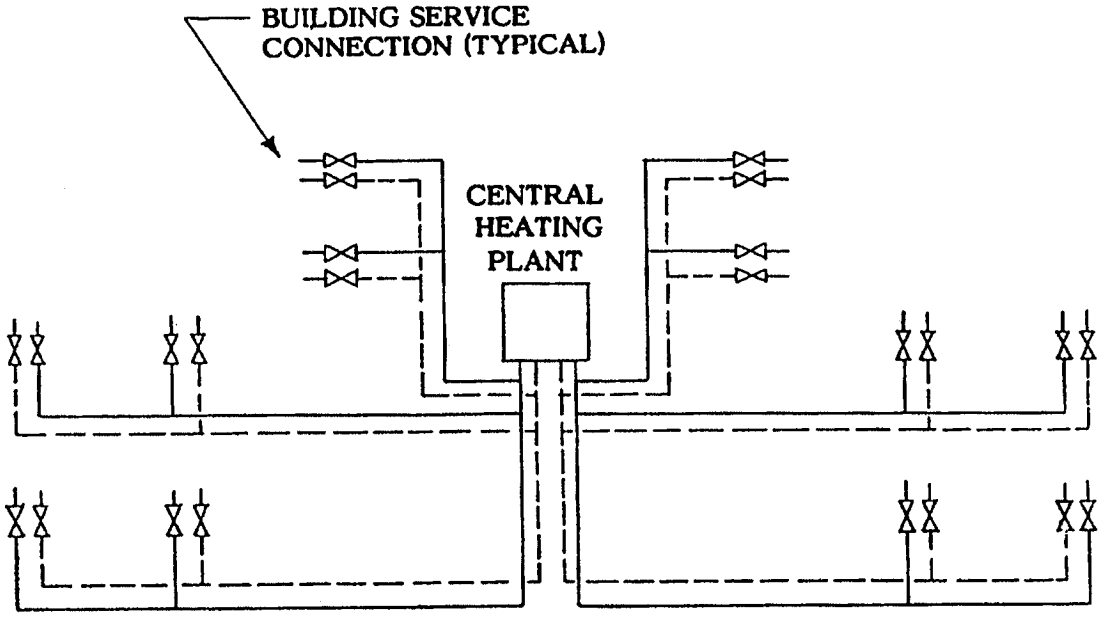

Figure C-2. Direct Supply, Radial.

Information Handling Services, 2000

Figure C-3. Return from each connection is fed back into the loop main. The effect of lower temperatures at connections farthest from the central plant must be considered.

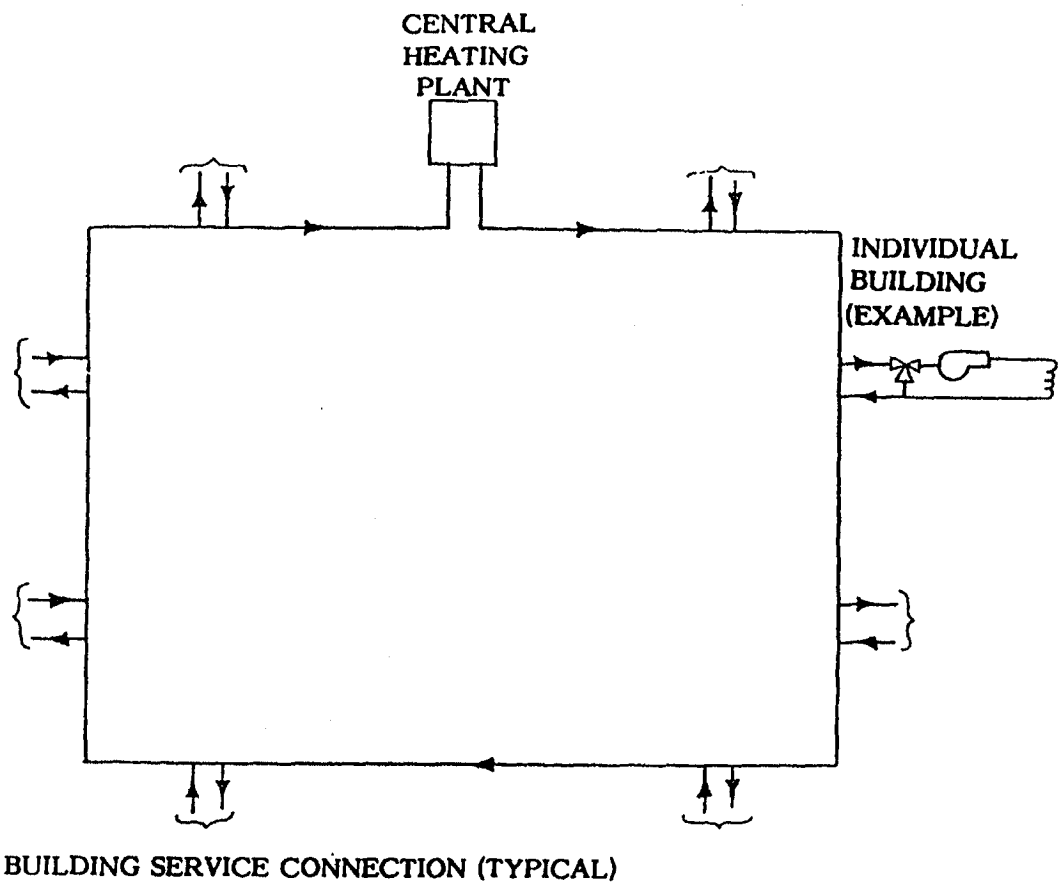

Figure C-3. One—Pipe Loop Main.

Information Handling Services, 2000

Figure C-4. This is a type of distribution that can be used with any layout, where high temperature water is converted for distribution of lower temperature water.

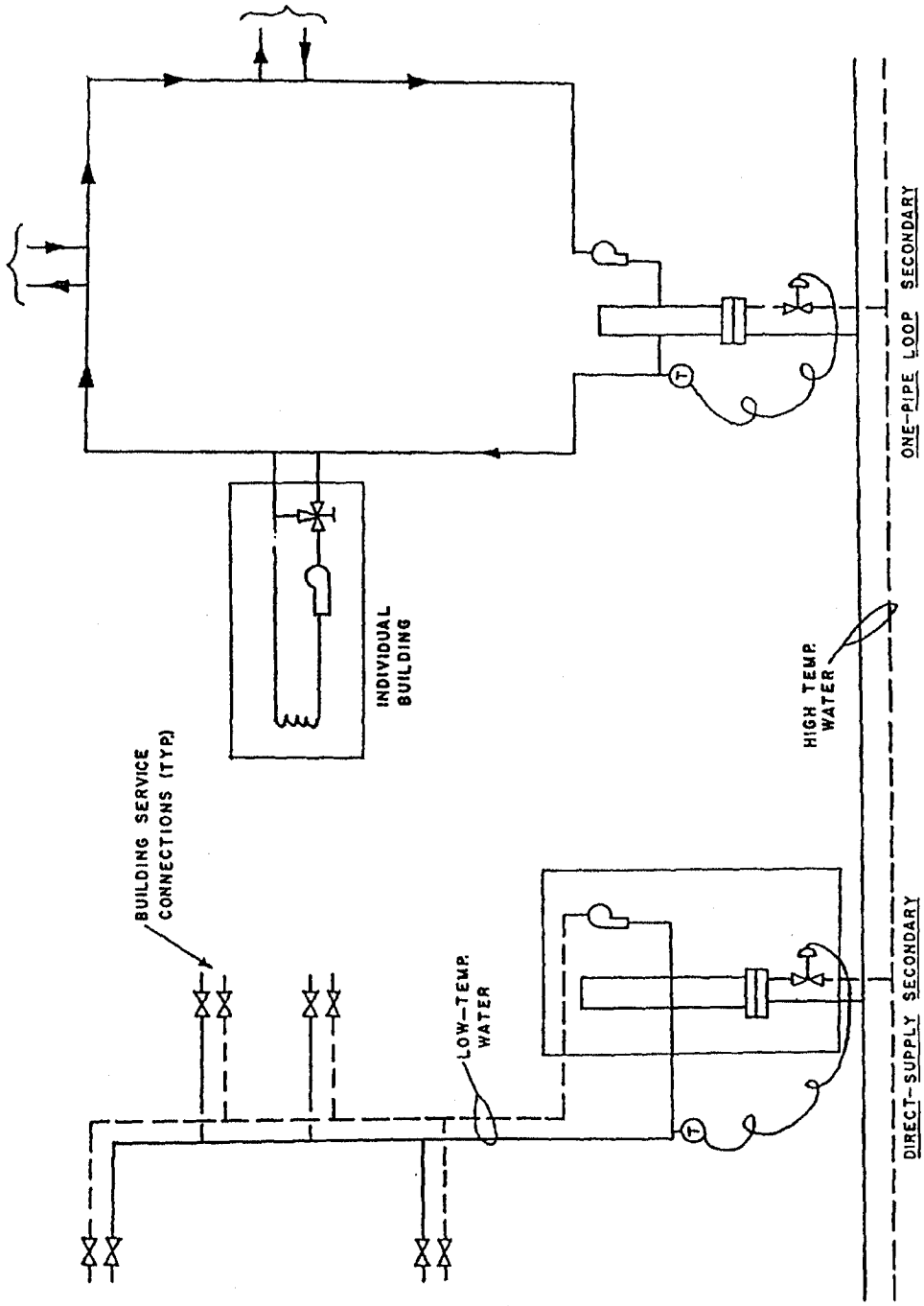

Figure C-4. Primary and Secondary Systems.

Information Handling Services, 2000

The proponent agency of this publication is the Office of the Chief of Engineers, United States Army. Users are invited to send comments and suggested improvements on DA Form 2028 (Recommended Changes to Publications and Blank Forms) to HQUSACE (CEMP-ET), WASH DC 20314-1000.

By Order of the Secretaries of the Army and the Air Force:

GORDON R. SULLIVAN
General, United States Army
Chief of Staff

Official:
MILTON H. HAMILTON
Administrative Assistant to the
Secretary of the Army

MERRILL A. McPEAK
General, USAF
Chief of Staff

Official:
EDWARD A. PARDINI
Colonel, USAF
Director of Information Management

Distribution:
Army: To be distributed in accordance with DA Form 12-34B, requirements for TM 5-810-2.
Air Force: F

☆U.S. GOVERNMENT PRINTING OFFICE : 1992 - 309-608

Information Handling Services, 2000