NOTES: 1. 3.5° SLIP ANGLE ASSUMED FOR 61.0° NOSE WHEEL DEFLECTION.

2. DIMENSIONS IN TABLE ARE IN FEET.

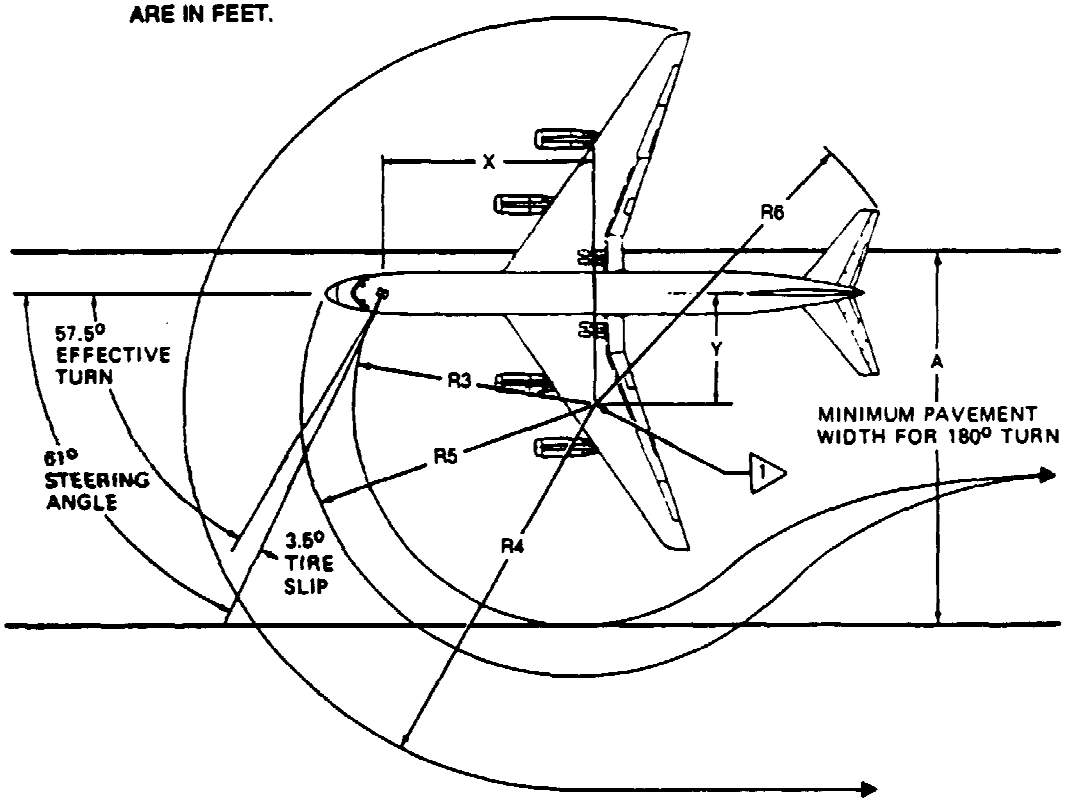


MEASUREMENTS INCLUDE DISTANCES TO OUTSIDE FACE OF NOSE AND MAIN LANDING GEAR TIRES.

1 THEORETICAL CENTER OF TURN FOR MINIMUM TURNING RADIUS. TURN INITIATED WITH AIRCRAFT IN MOTION, APPROXIMATELY IDLE THRUST ON ALL ENGINES WITH NO DIFFERENTIAL BRAKING.

| X | Y | A | R3 | R4 | R5 | R6 |
|---|---|---|---|---|---|---|
| 61.7 | 39.3 | 126.0 | 74.4 | 116.4 | 87.0 | 101.7 |

Figure D—91. McDonnell Douglas DC-8-62/-62F/-72/-72F, Minimum Turning Radii — 3.5° Slip Angle

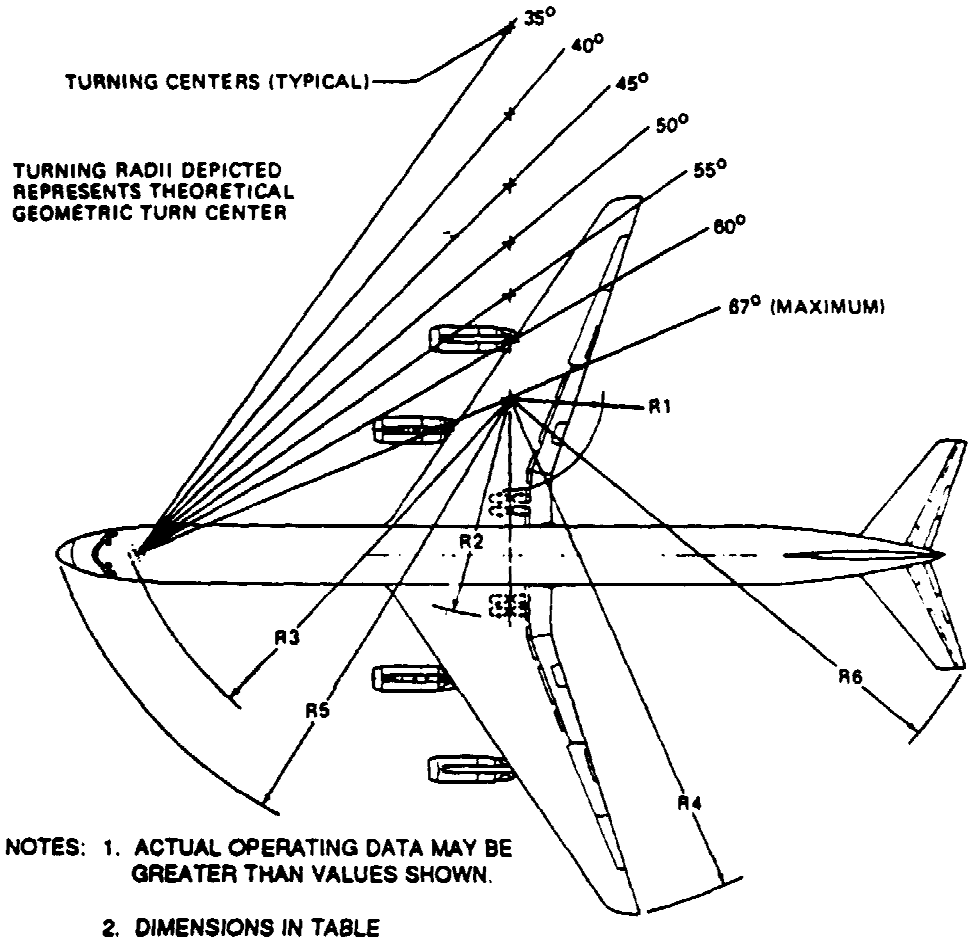


NOTES: 1. ACTUAL OPERATING DATA MAY BE GREATER THAN VALUES SHOWN.

2. DIMENSIONS IN TABLE ARE IN FEET.

| STEERING ANGLE (DEGREES) | R1 | R2 | R3 | R4 | R5 | R6 |
|---|---|---|---|---|---|---|
| 25 | 183.8 | 176.5 | 183.3 | 241.7 | 180.8 | 211.9 |
| 30 | 121.3 | 146.7 | 155.0 | 210.0 | 163.5 | 183.9 |
| 35 | 98.2 | 123.1 | 135.1 | 187.6 | 144.7 | 163.9 |
| 40 | 79.9 | 104.6 | 120.5 | 169.6 | 131.4 | 149.3 |
| 45 | 66.1 | 88.9 | 109.5 | 154.9 | 121.4 | 138.9 |
| 50 | 52.6 | 77.5 | 101.0 | 141.7 | 113.7 | 129.2 |
| 55 | 41.8 | 66.7 | 94.6 | 131.2 | 107.8 | 122.1 |
| 60 | 32.3 | 57.2 | 89.4 | 121.9 | 103.5 | 116.2 |
| 67 (MAXIMUM) | 20.5 | 45.3 | 84.1 | 110.4 | 99.0 | 109.7 |

Figure D–92. McDonnell Douglas DC–8–63/–63F/–73/–73F, Turning Radii – No Slip Angle

NOTES: 1. 3.6° SLIP ANGLE ASSUMED FOR 67° NOSE WHEEL DEFLECTION.

2. DIMENSIONS IN TABLE ARE IN FEET.

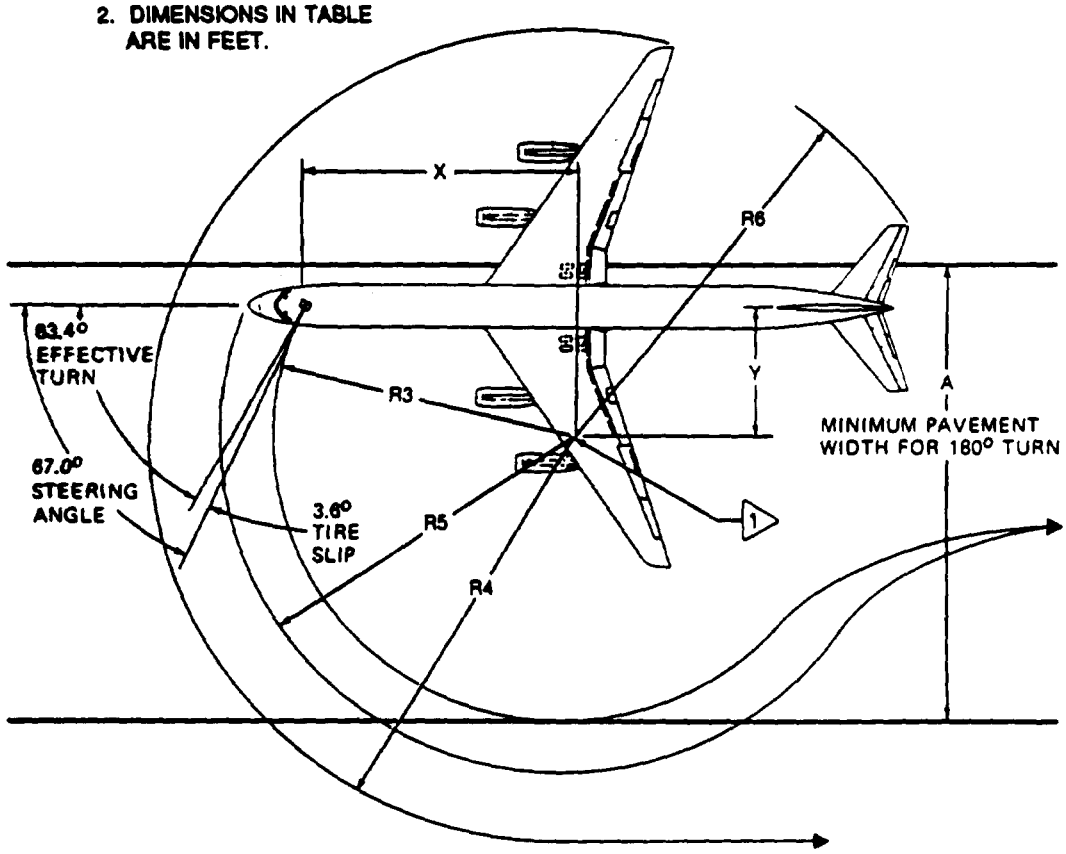


MEASUREMENTS INCLUDE DISTANCES TO OUTSIDE FACE OF NOSE AND MAIN LANDING GEAR TIRES.

1 THEORETICAL CENTER OF TURN FOR MINIMUM TURNING RADIUS. TURN INITIATED WITH AIRCRAFT IN MOTION, APPROXIMATELY IDLE THRUST ON ALL ENGINES WITH NO DIFFERENTIAL BRAKING.

| X | Y | A | R3 | R4 | R5 | R6 |
|---|---|---|---|---|---|---|
| 77.4 | 38.8 | 139.0 | 87.8 | 116.1 | 101.0 | 113.0 |

Figure D—93. McDonnell Douglas DC-8-63/-63F/-73/-73F, Minimum Turning Radii — 3.6° Slip Angle

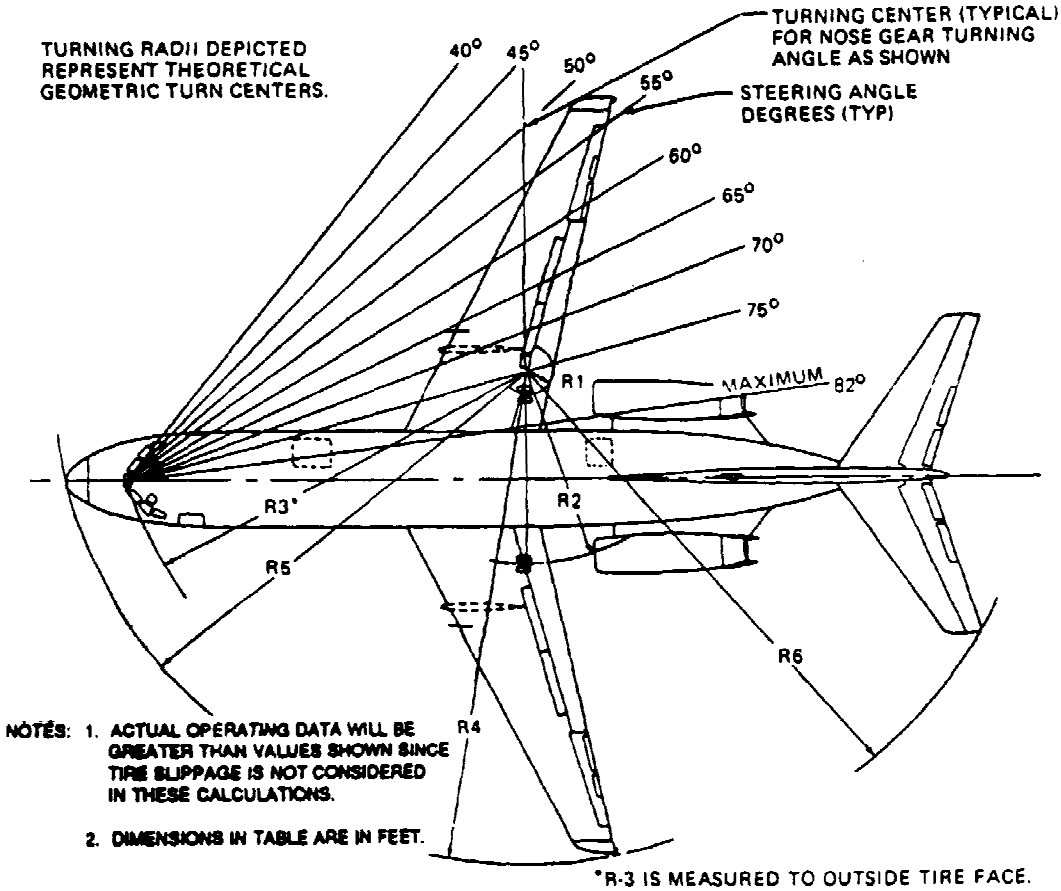


NOTES: 1. ACTUAL OPERATING DATA WILL BE GREATER THAN VALUES SHOWN SINCE TIRE SLIPPAGE IS NOT CONSIDERED IN THESE CALCULATIONS.

2. DIMENSIONS IN TABLE ARE IN FEET.

*R-3 IS MEASURED TO OUTSIDE TIRE FACE.

| STEERING ANGLE (DEGREES) | R1 | R2 | R3* | R4 | R5 | R6 |
|---|---|---|---|---|---|---|
| 30 | 67.5 | 83.8 | 88.1 | 120.9 | 91.4 | 108.0 |
| 45 | 35.5 | 51.8 | 52.6 | 89.2 | 67.3 | 81.7 |
| 50 | 28.5 | 44.8 | 57.8 | 82.2 | 63.0 | 76.5 |
| 55 | 22.4 | 38.7 | 54.1 | 76.2 | 59.7 | 72.3 |
| 60 | 17.0 | 33.4 | 51.2 | 70.9 | 57.1 | 68.8 |
| 65 | 12.2 | 28.5 | 48.0 | 66.1 | 55.1 | 65.8 |
| 70 | 7.7 | 24.1 | 47.3 | 61.8 | 53.7 | 63.3 |
| 75 | 3.5 | 19.9 | 46.0 | 57.7 | 52.6 | 61.1 |
| 82 (MAXIMUM) | -2.0 | 14.3 | 44.9 | 52.2 | 51.6 | 58.5 |

Figure D—94. McDonnell Douglas DC-9-15/-15F, Turning Radii — No Slip Angle

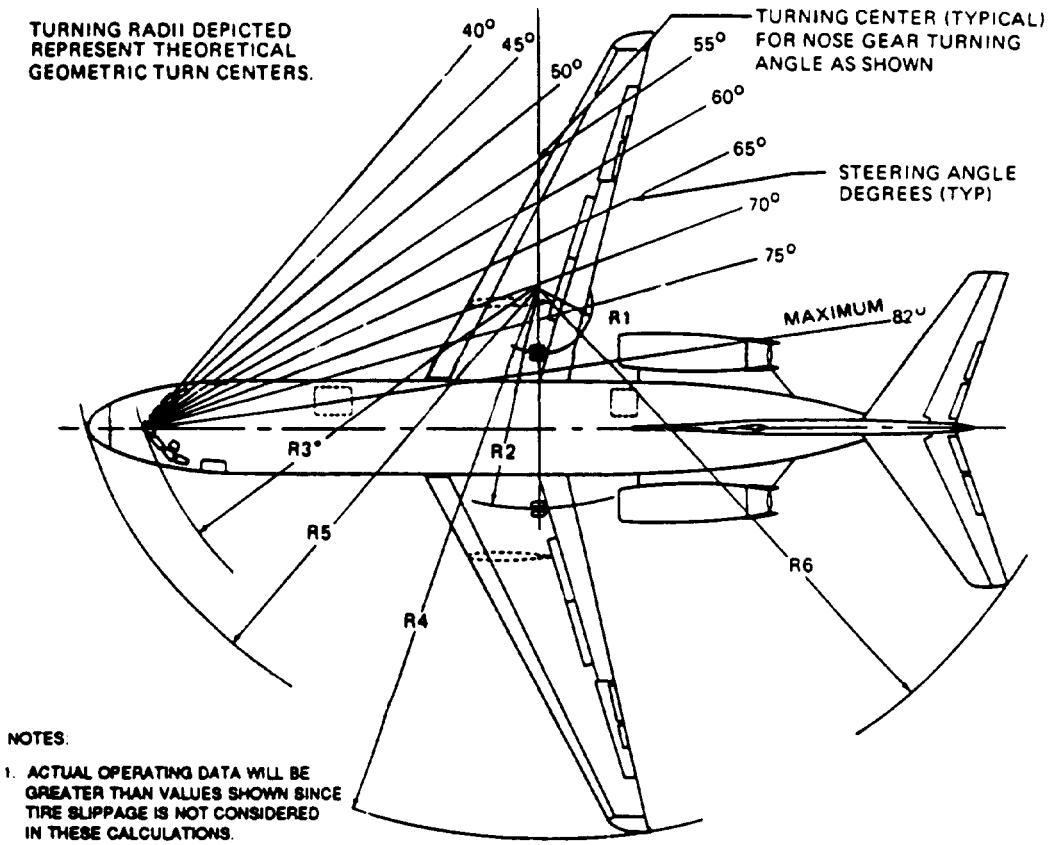


NOTES.

1. ACTUAL OPERATING DATA WILL BE GREATER THAN VALUES SHOWN SINCE TIRE SLIPPAGE IS NOT CONSIDERED IN THESE CALCULATIONS.
2. DIMENSIONS IN TABLE ARE IN FEET.

*R-3 IS MEASURED TO OUTSIDE TIRE FACE

| STEERING ANGLE (DEGREES) | R1 | R2 | R3* | R4 | R5 | R6 |
|---|---|---|---|---|---|---|
| 30 | 67.5 | 83.8 | 88.1 | 122.9 | 91.4 | 108.0 |
| 45 | 35.5 | 51.8 | 62.6 | 91.2 | 67.3 | 81.7 |
| 50 | 28.5 | 44.8 | 57.8 | 84.2 | 63.0 | 76.5 |
| 55 | 22.4 | 38.8 | 54.1 | 78.2 | 59.7 | 72.3 |
| 60 | 17.0 | 33.4 | 51.2 | 72.9 | 57.1 | 68.7 |
| 65 | 12.2 | 28.5 | 49.0 | 68.2 | 55.1 | 65.8 |
| 70 | 7.7 | 24.1 | 47.3 | 63.8 | 53.7 | 63.2 |
| 75 | 3.5 | 19.9 | 46.0 | 59.7 | 52.6 | 61.1 |
| 82 (MAXIMUM) | -2.0 | 14.3 | 44.9 | 54.2 | 51.6 | 58.5 |

Figure D-95. McDonnell Douglas DC-9-21, Turning Radii — No Slip Angle

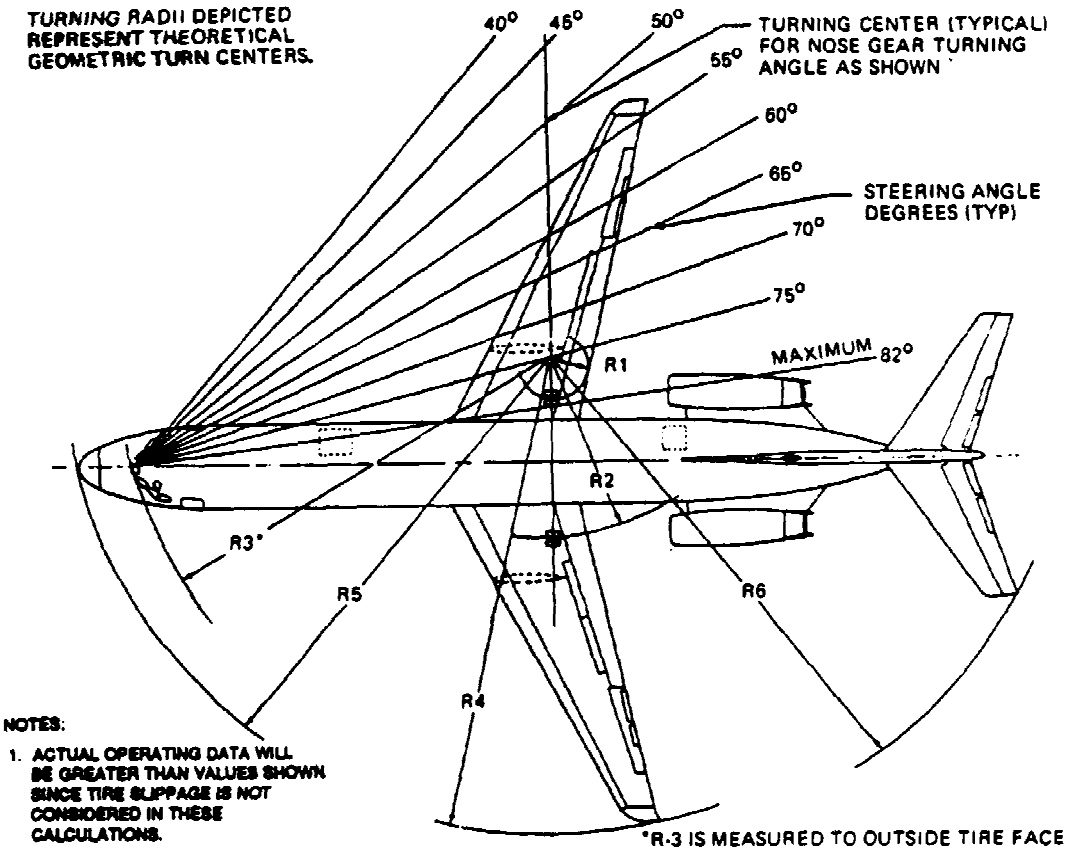


NOTES:

1. ACTUAL OPERATING DATA WILL BE GREATER THAN VALUES SHOWN SINCE TIRE SLIPPAGE IS NOT CONSIDERED IN THESE CALCULATIONS.

2. DIMENSIONS IN TABLE ARE IN FEET.

| STEERING ANGLE (DEGREES) | R1 | R2 | R3* | R4 | R5 | R6 |
|---|---|---|---|---|---|---|
| 30 | 83.9 | 100.3 | 107.1 | 139.3 | 110.3 | 125.0 |
| 45 | 45.9 | 61.3 | 78.0 | 100.6 | 80.7 | 92.5 |
| 50 | 36.4 | 52.8 | 70.2 | 92.1 | 75.4 | 86.0 |
| 55 | 29.1 | 45.4 | 65.7 | 84.8 | 71.2 | 80.6 |
| 60 | 22.5 | 38.9 | 62.2 | 78.3 | 68.1 | 76.4 |
| 65 | 16.6 | 33.0 | 59.5 | 72.5 | 65.6 | 72.9 |
| 70 | 11.2 | 27.5 | 57.4 | 67.2 | 63.6 | 69.7 |
| 75 | 6.1 | 22.4 | 55.8 | 62.2 | 62.4 | 67.0 |
| 82 (MAXIMUM) | -0.7 | 15.6 | 54.5 | 55.5 | 61.2 | 64.0 |

Figure D–96. McDonnell Douglas DC-9-32/-33F, Turning Radii – No Slip Angle

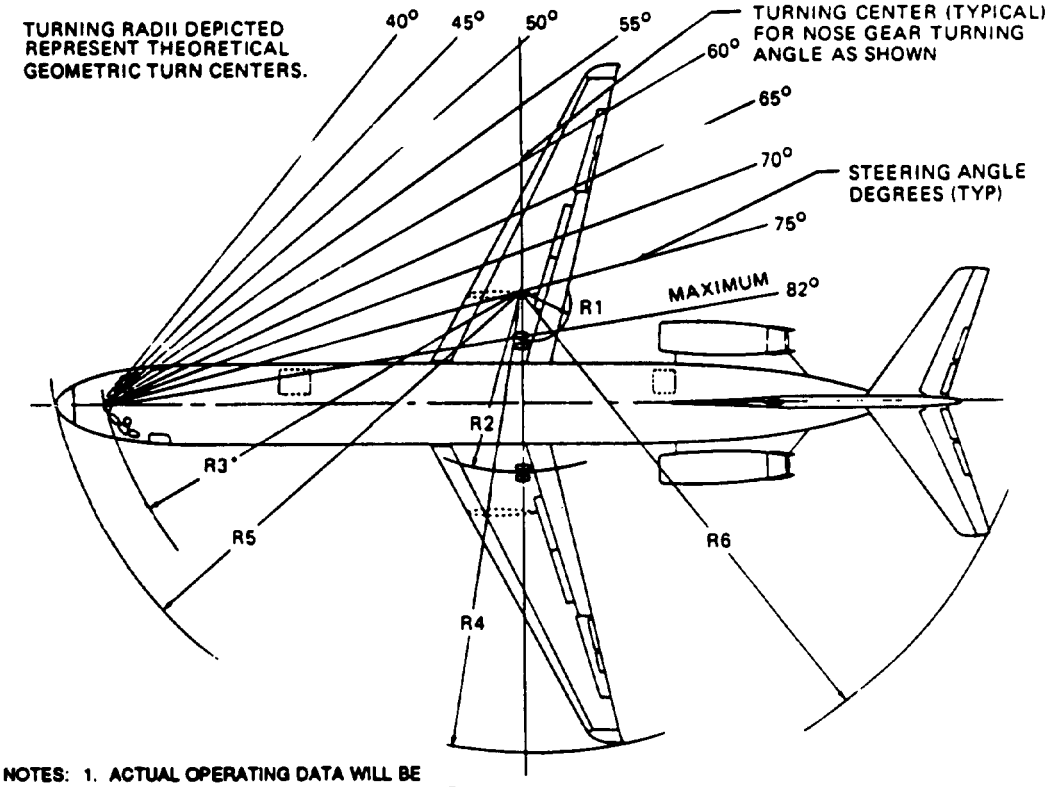


NOTES: 1. ACTUAL OPERATING DATA WILL BE GREATER THAN VALUES SHOWN SINCE TIRE SLIPPAGE IS NOT CONSIDERED IN THESE CALCULATIONS.

2. DIMENSIONS IN TABLE ARE IN FEET.

*R-3 IS MEASURED TO OUTSIDE TIRE FACE

| STEERING ANGLE (DEGREES) | R1 | R2 | R3* | R4 | R5 | R6 |
|---|---|---|---|---|---|---|
| 30 | 89.3 | 105.3 | 113.2 | 144.5 | 116.4 | 131.2 |
| 45 | 48.2 | 64.2 | 80.3 | 103.6 | 85.0 | 96.9 |
| 50 | 39.1 | 55.2 | 74.2 | 94.6 | 79.3 | 90.1 |
| 55 | 31.3 | 47.4 | 69.4 | 86.9 | 74.9 | 84.6 |
| 60 | 24.4 | 40.4 | 65.7 | 80.1 | 71.6 | 80.1 |
| 65 | 18.2 | 34.2 | 62.8 | 73.9 | 68.9 | 76.3 |
| 70 | 12.4 | 28.5 | 60.6 | 68.3 | 67.0 | 73.0 |
| 75 | 7.1 | 23.1 | 59.0 | 63.0 | 65.5 | 70.3 |
| 82 (MAXIMUM) | -0.1 | 15.9 | 57.5 | 56.0 | 64.3 | 67.2 |

Figure D—97. McDonnell Douglas DC-9-41,
Turning Radii — No Slip Angle

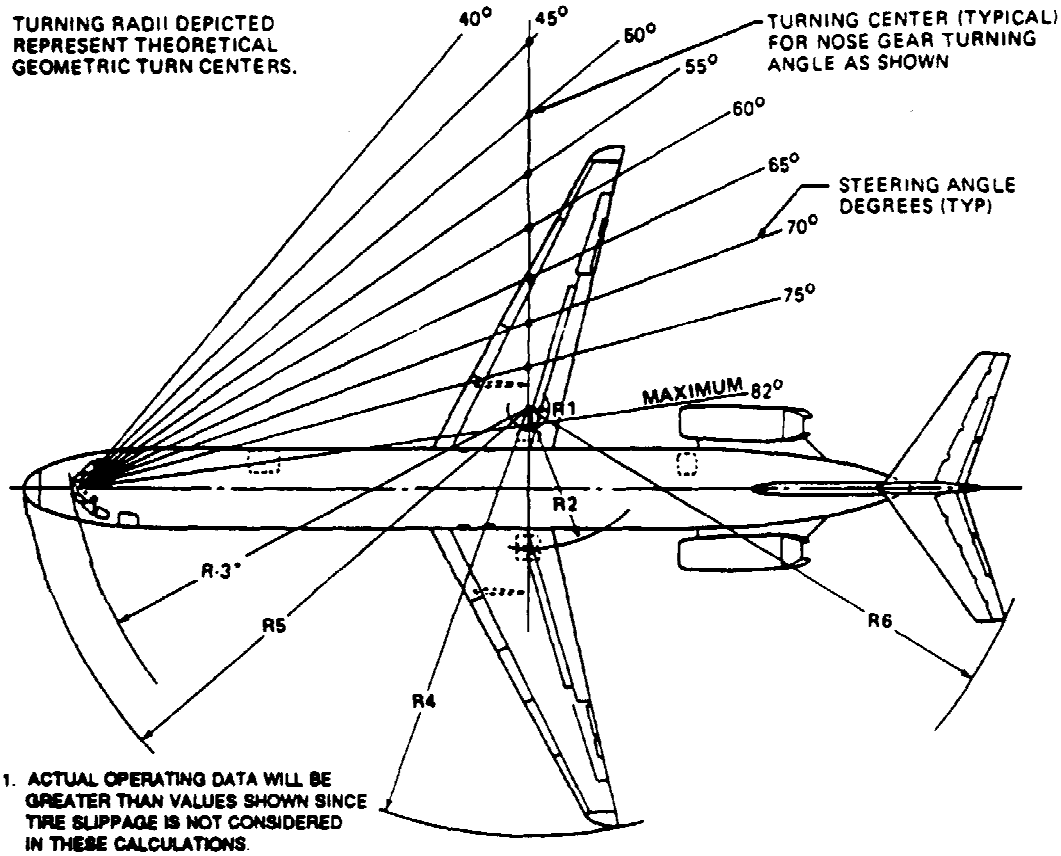


NOTES: 1. ACTUAL OPERATING DATA WILL BE GREATER THAN VALUES SHOWN SINCE TIRE SLIPPAGE IS NOT CONSIDERED IN THESE CALCULATIONS.

2. DIMENSIONS IN TABLE ARE IN FEET.

*R-3 IS MEASURED TO OUTSIDE TIRE FACE

| STEERING ANGLE (DEGREES) | R1 | R2 | R3* | R4 | R5 | R6 |
|---|---|---|---|---|---|---|
| 30 | 97.5 | 113.5 | 122.7 | 153.8 | 125.8 | 140.0 |
| 45 | 52.9 | 68.9 | 87.0 | 109.0 | 91.6 | 102.6 |
| 50 | 43.1 | 59.1 | 80.4 | 100.3 | 85.4 | 95.3 |
| 55 | 34.6 | 50.6 | 75.2 | 92.1 | 80.7 | 88.3 |
| 60 | 27.2 | 43.2 | 71.2 | 84.8 | 77.0 | 84.3 |
| 65 | 20.4 | 36.4 | 68.1 | 78.3 | 74.1 | 80.2 |
| 70 | 14.2 | 30.2 | 65.7 | 72.4 | 72.0 | 76.7 |
| 75 | 8.3 | 24.3 | 63.8 | 66.9 | 70.4 | 73.8 |
| 82 (MAXIMUM) | 0.6 | 16.6 | 62.4 | 59.6 | 69.0 | 70.5 |

Figure D-98. McDonnell Douglas DC-9-51,
Turning Radii — No Slip Angle

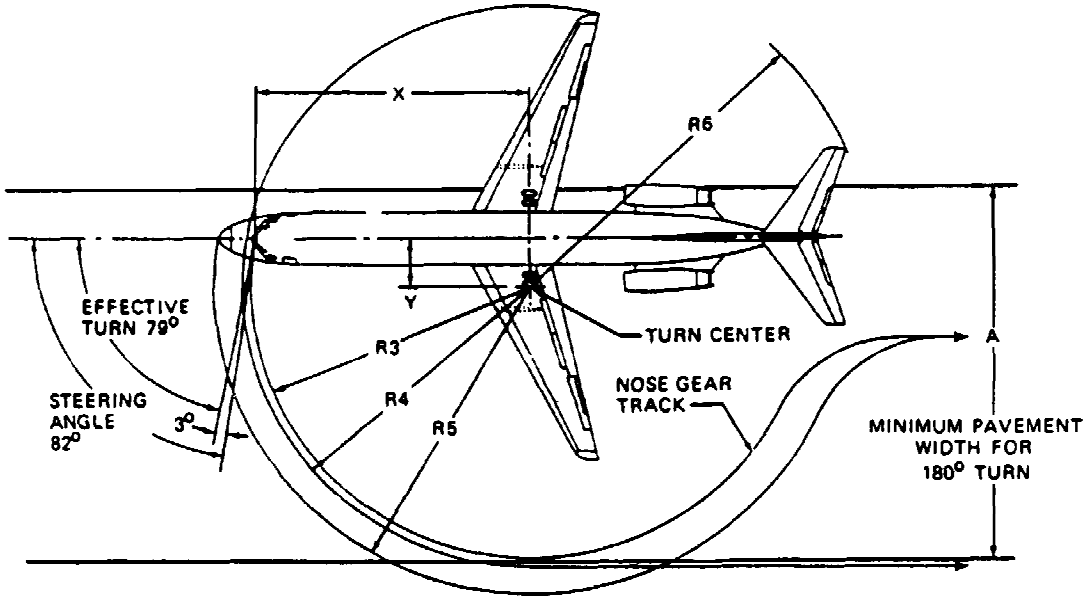


NOTES: 1. 3° TIRE SLIP ANGLE ASSUMES 82° NOSE WHEEL DEFLECTION DURING VERY SLOW TURNING.

2. NO DIFFERENTIAL BRAKING OR UNSYMMETRICAL THRUST.

3. DIMENSIONS IN TABLE ARE IN FEET.

| DC-9 | EFFECTIVE TURNING ANGLE | X | Y | A | R3 | R4 | R5 | R6 |
|---|---|---|---|---|---|---|---|---|
| -15, -15F | 79° | 43.7 | 8.5 | 63.7 | 45.4 | 54.5 | 51.9 | 59.6 |
| -21 | 79° | 43.7 | 8.5 | 63.7 | 45.4 | 56.5 | 51.9 | 59.5 |
| -32, -33F | 79° | 53.2 | 10.3 | 75.2 | 55.1 | 58.3 | 61.6 | 65.2 |
| -41 | 79° | 56.2 | 10.9 | 78.9 | 58.2 | 58.9 | 64.7 | 68.5 |
| -51 | 79° | 60.9 | 11.8 | 84.5 | 62.0 | 59.8 | 69.5 | 71.8 |

Figure D—99. McDonnell Douglas DC-9-15/-15F/-21/-32/-33F/-41/-51, Minimum Turning Radii — 3° Slip Angle

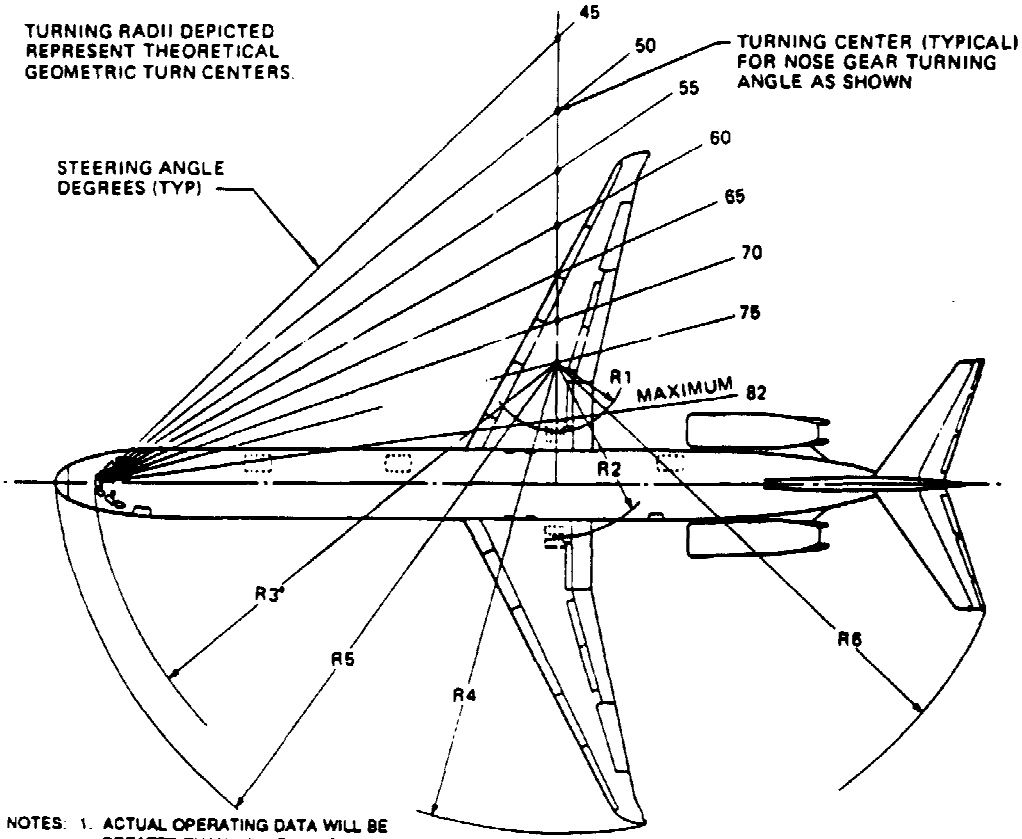


NOTES: 1. ACTUAL OPERATING DATA WILL BE GREATER THAN VALUES SHOWN SINCE TIRE SLIPPAGE IS NOT CONSIDERED IN THESE CALCULATIONS.

2. DIMENSIONS IN TABLE ARE IN FEET.

*R-3 IS MEASURED TO OUTSIDE TIRE FACE.

| STEERING ANGLE (DEGREES) | R1 | R2 | R3* | R4 | R5 | R6 |
|---|---|---|---|---|---|---|
| 30 | 117.1 | 133.8 | 145.7 | 180.0 | 148.8 | 150.6 |
| 45 | 64.1 | 80.8 | 103.3 | 127.3 | 107.9 | 114.7 |
| 50 | 52.4 | 69.1 | 95.4 | 115.7 | 100.8 | 105.6 |
| 55 | 42.4 | 59.0 | 89.3 | 106.7 | 94.7 | 98.1 |
| 60 | 33.5 | 50.1 | 84.5 | 97.0 | 90.3 | 91.8 |
| 65 | 25.4 | 42.1 | 80.8 | 89.0 | 86.8 | 86.6 |
| 70 | 18.0 | 34.7 | 78.0 | 81.7 | 84.2 | 82.2 |
| 75 | 11.1 | 27.7 | 75.9 | 74.9 | 82.3 | 78.5 |
| 82 (MAXIMUM) | 1.9 | 18.5 | 74.0 | 65.9 | 80.7 | 74.3 |

Figure D—100. McDonnell Douglas MD-81/-82/-83/-88, Turning Radii — No Slip Angle

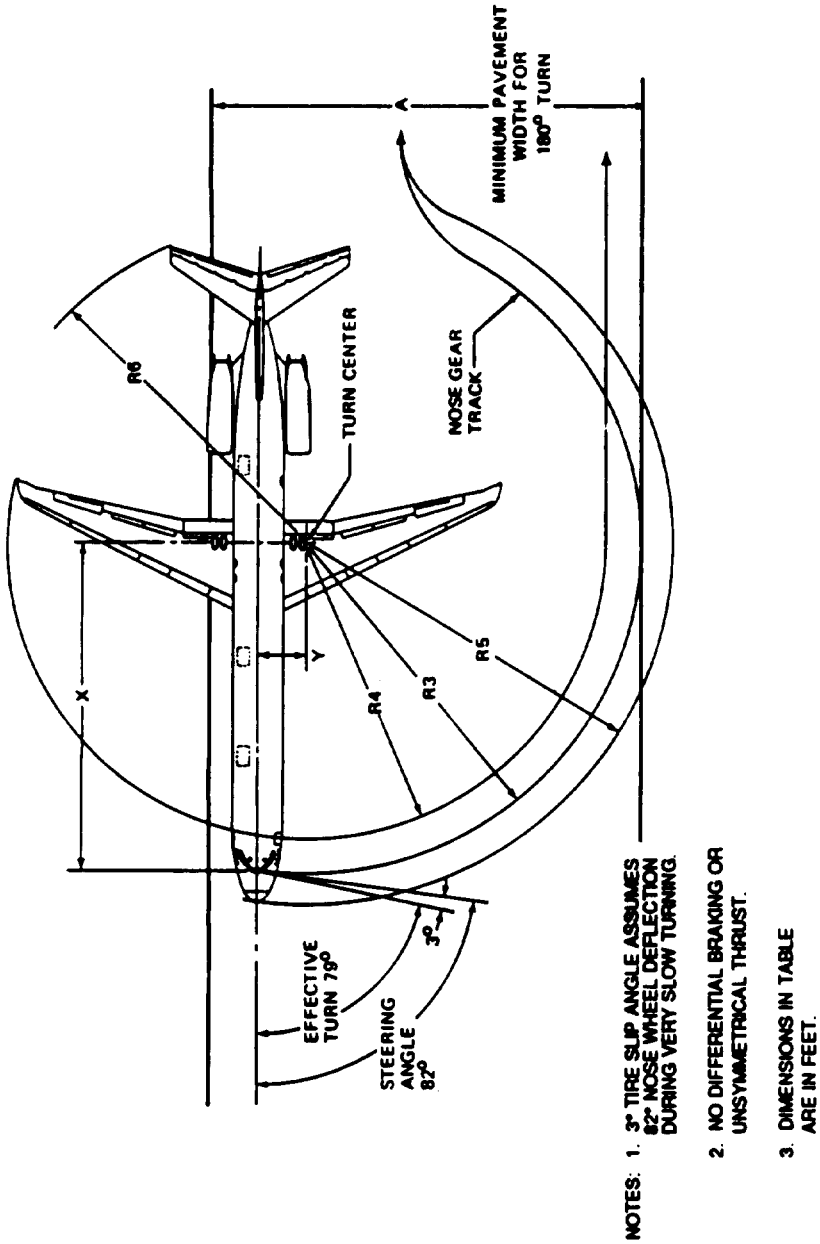


| EFFECTIVE TURNING ANGLE | X | Y | A | R3 | R4 | R5 | R6 |
|---|---|---|---|---|---|---|---|
| 79° | 72.4 | 14.0 | 98.8 | 73.6 | 69.6 | 81.2 | 75.9 |

NOTES:
1. 3° TIRE SLIP ANGLE ASSUMES 82° NOSE WHEEL DEFLECTION DURING VERY SLOW TURNING.
2. NO DIFFERENTIAL BRAKING OR UNSYMMETRICAL THRUST.
3. DIMENSIONS IN TABLE ARE IN FEET.

Figure D-101. McDonnell Douglas MD-81/-82/-83/-88,
Minimum Turning Radii — 3° Slip Angle

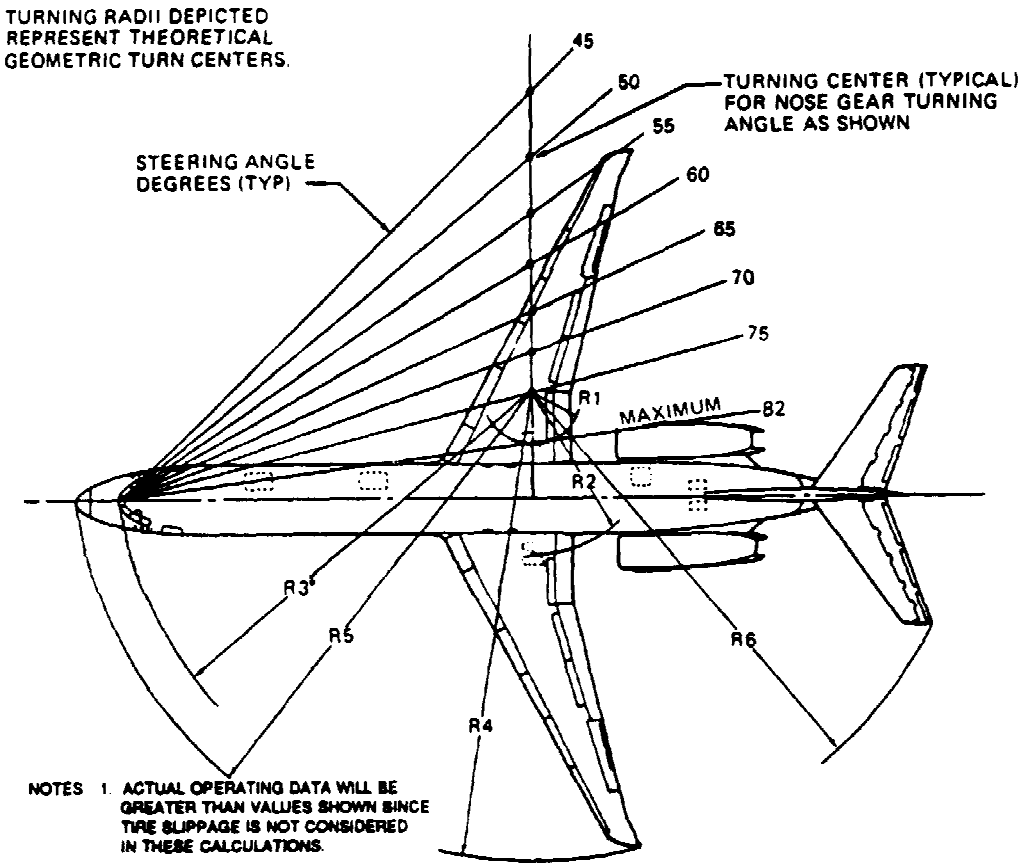


NOTES 1. ACTUAL OPERATING DATA WILL BE GREATER THAN VALUES SHOWN SINCE TIRE SLIPPAGE IS NOT CONSIDERED IN THESE CALCULATIONS.

2. DIMENSIONS IN TABLE ARE IN FEET.

*R-3 IS MEASURED TO OUTSIDE TIRE FACE.

| STEERING ANGLE (DEGREES) | R1 | R2 | R3* | R4 | R5 | R6 |
|---|---|---|---|---|---|---|
| 30 | 100.6 | 117.3 | 126.7 | 163.6 | 129.8 | 142.3 |
| 45 | 54.6 | 71.3 | 89.8 | 117.8 | 94.5 | 102.4 |
| 50 | 44.5 | 61.1 | 83.0 | 107.7 | 88.1 | 94.4 |
| 55 | 35.7 | 52.4 | 77.7 | 99.1 | 83.1 | 87.8 |
| 60 | 28.0 | 44.7 | 73.5 | 91.4 | 79.3 | 82.3 |
| 65 | 21.0 | 37.7 | 70.3 | 84.6 | 76.4 | 77.7 |
| 70 | 14.6 | 31.3 | 67.8 | 78.2 | 74.2 | 73.8 |
| 75 | 8.5 | 25.3 | 66.0 | 72.2 | 72.5 | 70.4 |
| 82 (MAXIMUM) | 0.5 | 17.2 | 64.4 | 64.5 | 71.1 | 66.6 |

Figure D—102. McDonnell Douglas MD-87,
Turning Radii — No Slip Angle

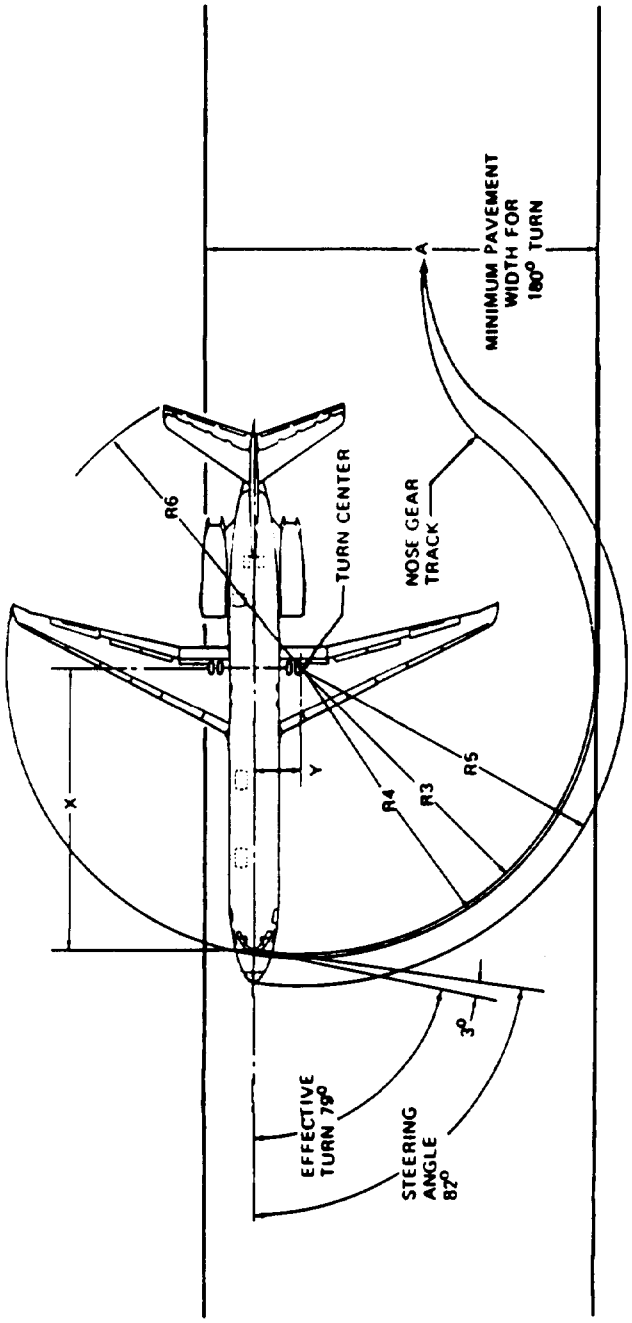


| EFFECTIVE TURNING ANGLE | X | Y | A | R3 | R4 | R5 | R6 |
|---|---|---|---|---|---|---|---|
| 79° | 62.9 | 12.2 | 87.4 | 64.1 | 67.7 | 71.6 | 68.1 |

NOTES:
1. 3° TIRE SLIP ANGLE ASSUMES 82° NOSE WHEEL DEFLECTION DURING VERY SLOW TURNING.
2. NO DIFFERENTIAL BRAKING OR UNSYMMETRICAL THRUST.
3. DIMENSIONS IN TABLE ARE IN FEET.

Figure D-l03. McDonnell Douglas MD-87, Minimum Turning Radii — 3° Slip Angle

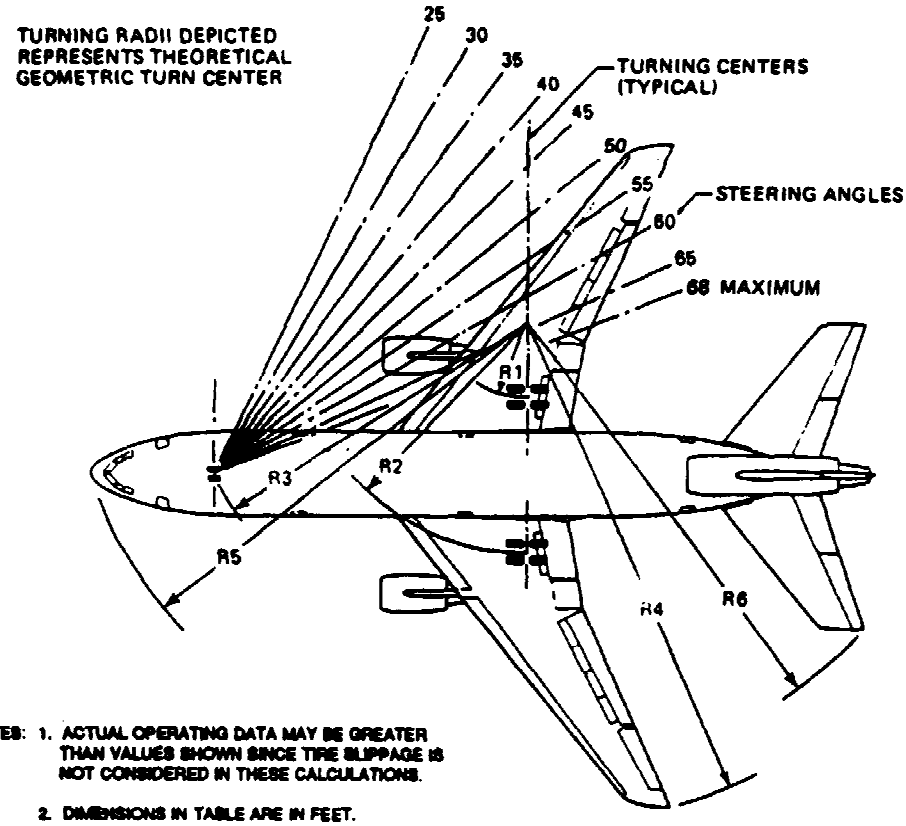


NOTES: 1. ACTUAL OPERATING DATA MAY BE GREATER THAN VALUES SHOWN SINCE TIRE SLIPPAGE IS NOT CONSIDERED IN THESE CALCULATIONS.

2. DIMENSIONS IN TABLE ARE IN FEET.

| STEERING ANGLE (DEGREES) | R1 | R2 | R3 | R4 | R5 | R6 |
|---|---|---|---|---|---|---|
| 25 | 136.2 | 172.9 | 171.8 | 236.7 | 186.1 | 206.2 |
| 30 | 108.3 | 142.9 | 145.0 | 206.2 | 160.8 | 179.8 |
| 35 | 82.2 | 120.9 | 126.4 | 184.5 | 144.2 | 159.2 |
| 40 | 69.1 | 103.8 | 112.8 | 167.7 | 132.5 | 144.5 |
| 45 | 55.2 | 89.9 | 102.6 | 154.1 | 123.8 | 133.0 |
| 50 | 43.5 | 78.2 | 94.7 | 142.8 | 117.4 | 123.7 |
| 55 | 33.4 | 68.1 | 86.5 | 133.0 | 112.5 | 116.0 |
| 60 | 24.5 | 59.2 | 83.7 | 124.4 | 108.8 | 109.5 |
| 65 | 16.5 | 51.2 | 80.0 | 116.7 | 105.9 | 104.0 |
| 68 (MAXIMUM) | 12.0 | 46.6 | 78.2 | 112.4 | 104.6 | 101.0 |

Figure D-104. McDonnell Douglas DC-10-10, Turning Radii — No Slip Angle

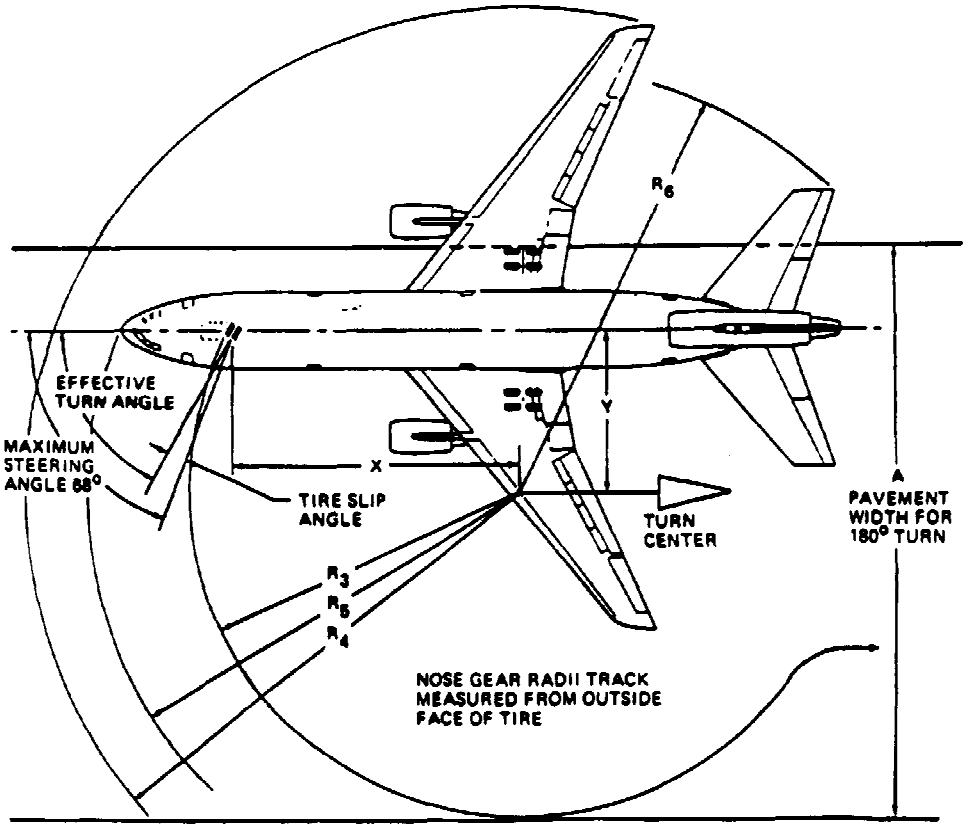


1 MAXIMUM STEERING:
SYMMETRICAL THRUST AND
NO DIFFERENTIAL BRAKING
SLOW CONTINUOUS TURN
AFT CENTER OF GRAVITY
MAX GROSS WEIGHT

2 MAXIMUM STEERING:
UNSYMMETRICAL THRUST AND
LIGHT DIFFERENTIAL BRAKING
SLOW CONTINUOUS TURN
AFT CENTER OF GRAVITY
MAX GROSS WEIGHT

3 MINIMUM RADIUS TURN RECOMMENDED FOR NORMAL, ROUTINE OPERATIONS. LIMITED TO AVOID EXCESSIVE TIRE WEAR AND REDUCTION OF LANDING GEAR FATIGUE LIFE.

| TYPE OF TURN | EFFECTIVE TURN ANGLE | TIRE SLIP ANGLE | X | Y | A | $R_3$ | $R_4$ | $R_5$ | $R_6$ |
|---|---|---|---|---|---|---|---|---|---|
| 1 | 61.7° | 6.3° | 72.5 | 39.0 | 143.5 | 83.9 | 121.7 | 107.6 | 107.5 |
| 2 | 69.6° | -1.5° | 72.5 | 27.0 | 126.5 | 78.8 | 110.4 | 103.8 | 99.7 |
| 3 | • | • | 72.5 | 39.5 | 144.3 | 84.1 | 122.2 | 108.0 | 107.9 |

NOTE: DIMENSIONS ARE IN FEET.

Figure D-105. McDonnell Douglas DC-10-10, Minimum Turning Radii — With Slip Angle

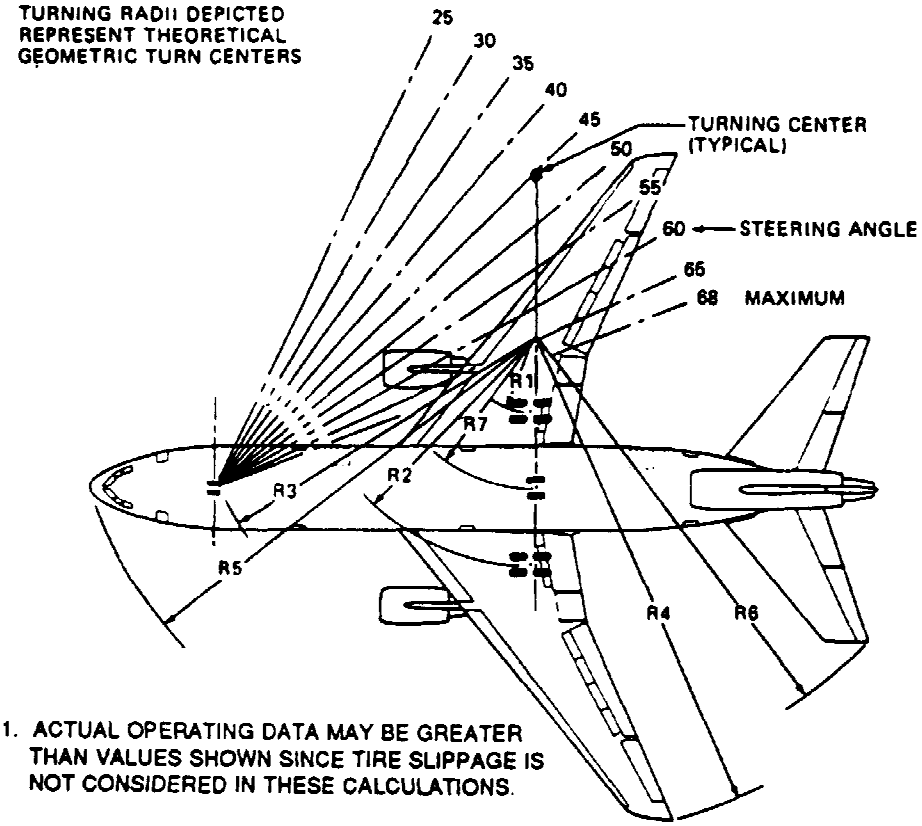


NOTES: 1. ACTUAL OPERATING DATA MAY BE GREATER THAN VALUES SHOWN SINCE TIRE SLIPPAGE IS NOT CONSIDERED IN THESE CALCULATIONS.

2. DIMENSIONS IN TABLE ARE IN FEET.

| STEERING ANGLE (DEGREES) | R1 | R2 | R3 | R4 | R5 | R6 | R7 |
|---|---|---|---|---|---|---|---|
| 25 | 138.9 | 173.9 | 172.6 | 241.9 | 186.1 | 206.9 | 156.4 |
| 30 | 108.9 | 143.8 | 145.9 | 212.3 | 161.6 | 179.3 | 126.3 |
| 35 | 86.7 | 121.7 | 127.2 | 190.5 | 145.0 | 159.5 | 104.2 |
| 40 | 69.4 | 104.4 | 113.6 | 173.8 | 133.1 | 144.7 | 86.9 |
| 45 | 55.4 | 90.4 | 103.1 | 159.9 | 124.4 | 133.1 | 73.0 |
| 50 | 43.7 | 78.7 | 95.2 | 148.5 | 117.9 | 123.7 | 61.2 |
| 55 | 33.6 | 68.6 | 89.0 | 138.8 | 113.0 | 115.9 | 51.1 |
| 60 | 24.6 | 59.6 | 84.2 | 130.1 | 109.2 | 109.4 | 42.2 |
| 65 | 16.5 | 51.5 | 80.5 | 122.4 | 106.4 | 103.8 | 34.1 |
| 68 (MAXIMUM) | 12.0 | 47.0 | 78.7 | 118.1 | 105.0 | 100.8 | 29.5 |

Figure D—106. McDonnell Douglas DC-10-30 and DC-10-40, Turning Radii — No Slip Angle

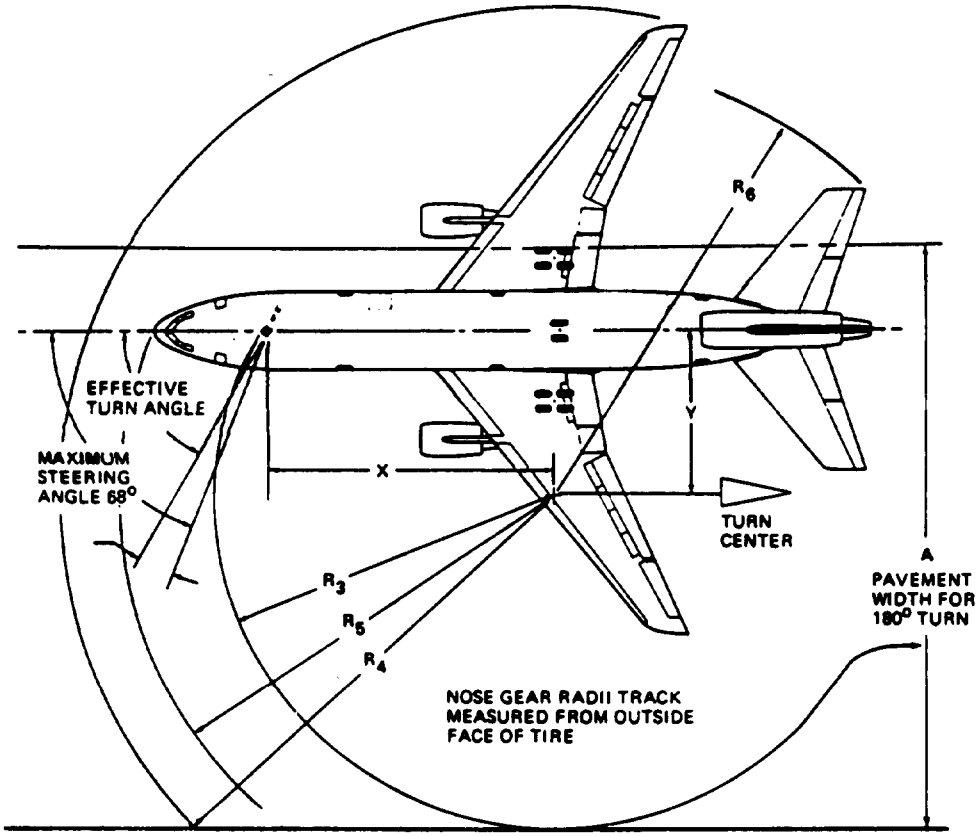


1 MAXIMUM STEERING:
SYMMETRICAL THRUST AND
NO DIFFERENTIAL BRAKING
SLOW CONTINUOUS TURN
AFT CENTER OF GRAVITY
MAX GROSS WEIGHT

2 MAXIMUM STEERING:
UNSYMMETRICAL THRUST AND
LIGHT DIFFERENTIAL BRAKING
SLOW CONTINUOUS TURN
AFT CENTER OF GRAVITY
MAX GROSS WEIGHT

3 MINIMUM RADIUS TURN RECOMMENDED
FOR NORMAL, ROUTINE OPERATIONS.
LIMITED TO AVOID EXCESSIVE TIRE
WEAR AND REDUCTION OF LANDING
GEAR FATIGUE LIFE.

| TYPE OF TURN | EFFECTIVE TURN ANGLE | TIRE SLIP ANGLE | X | Y | A | $R_3$ | $R_4$ | $R_5$ | $R_6$ |
|---|---|---|---|---|---|---|---|---|---|
| 1 | 62.9° | 5.1° | 72.9 | 37.2 | 141.4 | 83.5 | 125.3 | 107.5 | 105.9 |
| 2 | 68.3° | -1.3° | 72.9 | 27.6 | 128.0 | 79.8 | 116.1 | 104.7 | 99.5 |
| 3 | - | - | 72.9 | 42.7 | 149.5 | 85.2 | 130.5 | 109.6 | 109.8 |

NOTE: DIMENSIONS ARE IN FEET.

Figure D-107. McDonnell Douglas DC-10-30 and DC-10-40, Minimum Turning Radii — With Slip Angle

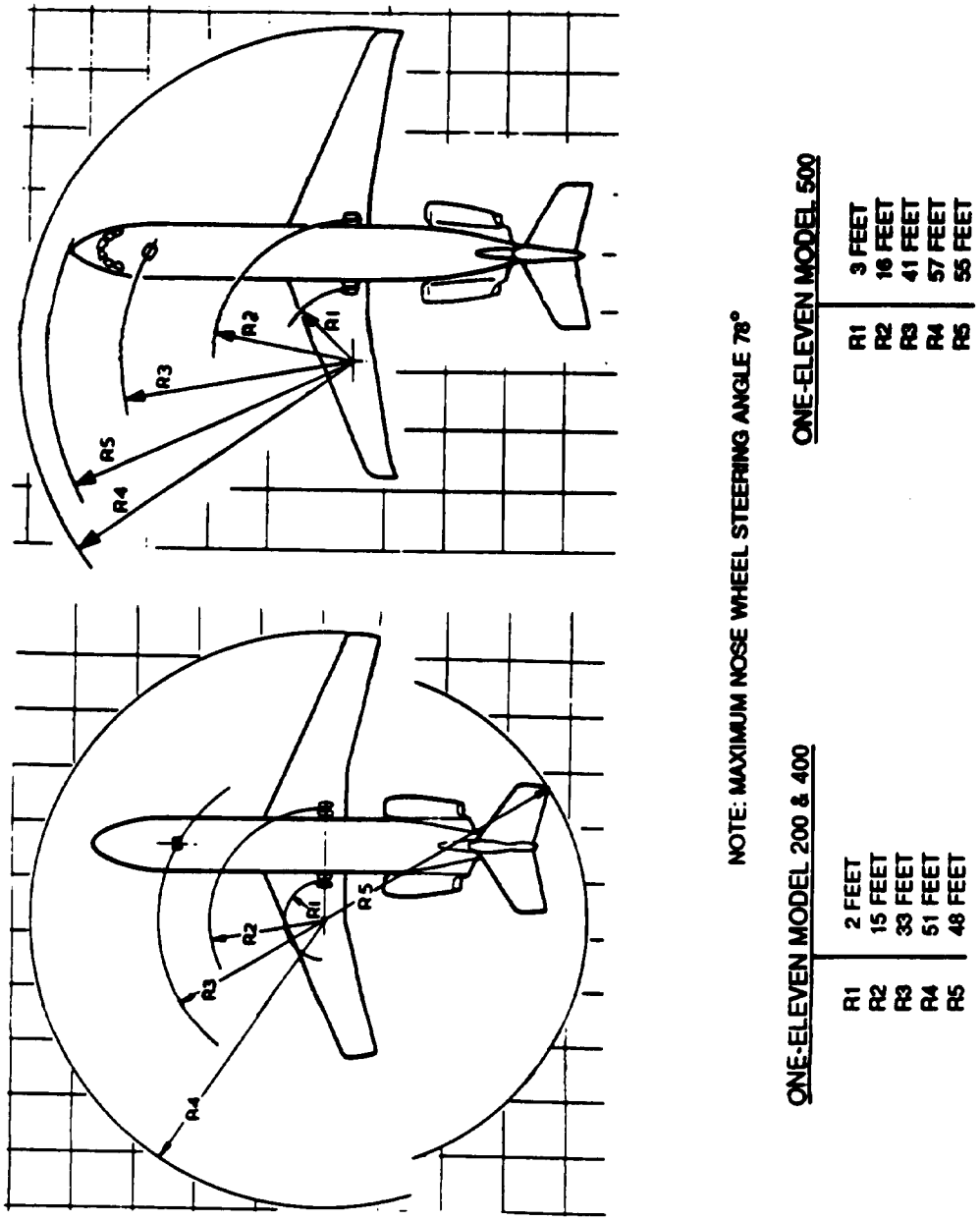


Figure D—108. B.A.C. One—Eleven Model 200, 400, and 500, Minimum Turning Radii

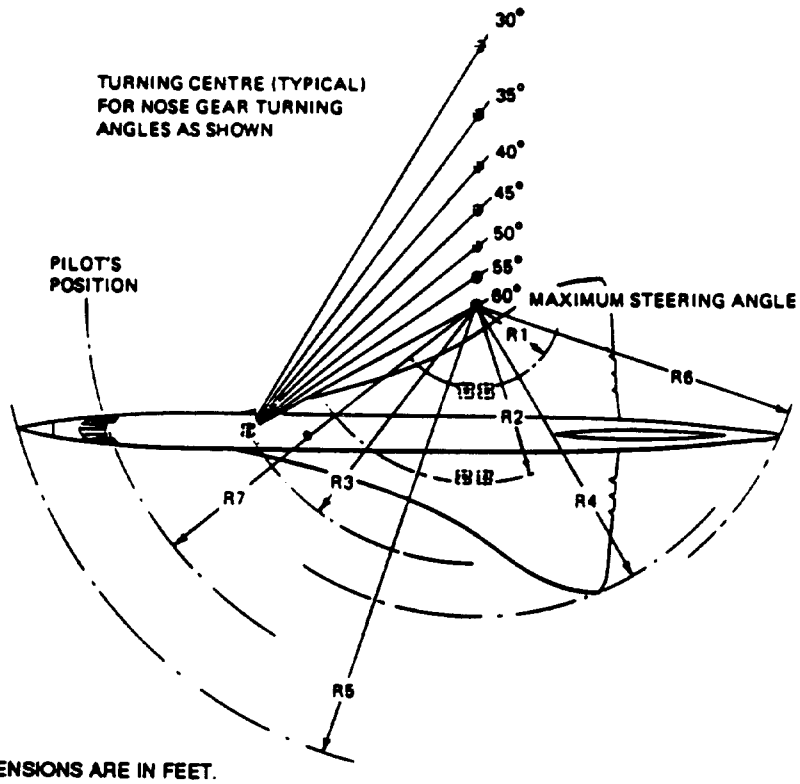


NOTE: DIMENSIONS ARE IN FEET.

| STEERING ANGLE (DEGREES) | R1 | R2 | R3 | R4 | R5 | R6 | R7 |
|---|---|---|---|---|---|---|---|
| | INNER MAIN WHEEL | OUTER MAIN WHEEL | NOSE WHEELS | OUTER WING TIP | NOSE * | TAIL | PILOT |
| 30 | 90.6 | 116 | 119 | 149 | 159 | 132 | 142 |
| 35 | 72.5 | 97.8 | 104 | 132 | 148 | 118 | 130 |
| 40 | 58.4 | 83.7 | 92.7 | 119 | 140 | 108 | 121 |
| 45 | 47.0 | 72.3 | 84.3 | 107 | 135 | 101 | 114 |
| 50 | 37.3 | 62.7 | 77.8 | 98.7 | 131 | 96.4 | 110 |
| 55 | 29.0 | 54.4 | 72.7 | 91.0 | 128 | 92.3 | 106 |
| 60 (MAXIMUM) | 22.6 | 47.1 | 68.8 | 84.4 | 126 | 89.3 | 103 |

*NOSE FULLY RAISED: PROBE NOT INCLUDED.

Figure D—109. B.A.C./SNIAS Concorde,
Turning Radii — No Slip Angle

NOTE: 60° IS MAXIMUM POWERED STEERING ANGLE
3° SLIPPAGE HAS BEEN ASSUMED TO OCCUR
GIVING AN EFFECTIVE ANGLE OF 57°

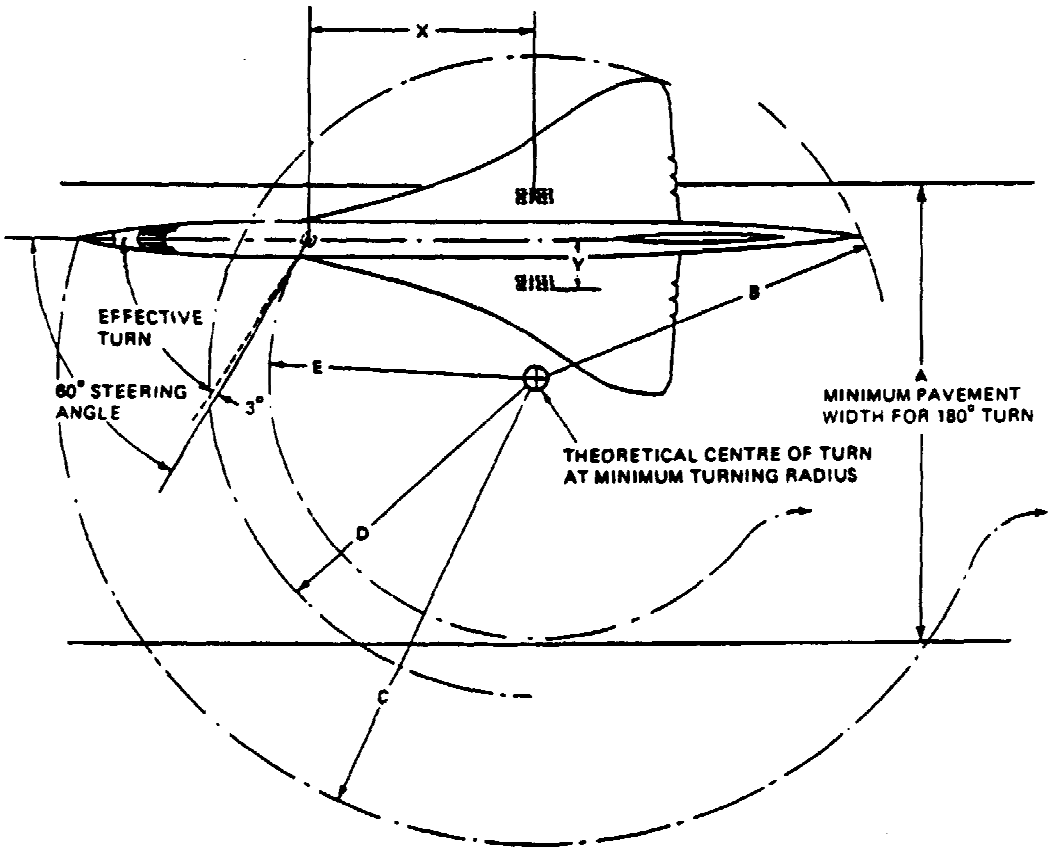


NOTES: 1. DIMENSIONS IN TABLE ARE IN FEET.

2. EFFECTIVE TURN ANGLE OF 57°

| X | Y | A | B | C* | D | E |
|---|---|---|---|---|---|---|
| 59.7 | 14.5 | 127 | 91 | 127 | 88 | 71 |

*NOSE FULLY RAISED: PROBE NOT INCLUDED.

Figure D-110. B.A.C./SNIAS Concorde, Minimum Turning Radii — 3° Slip Angle