MAXIMUM TIRE PRESSURE, PSI		A	B	C	D	E	F	G	J	K	M	N
MAIN GEAR	NOSE GEAR											
95	80	77.3	80.6	27.8	29.3	28.2	16.6	8.5	28.8	5.2	8.3	7.8

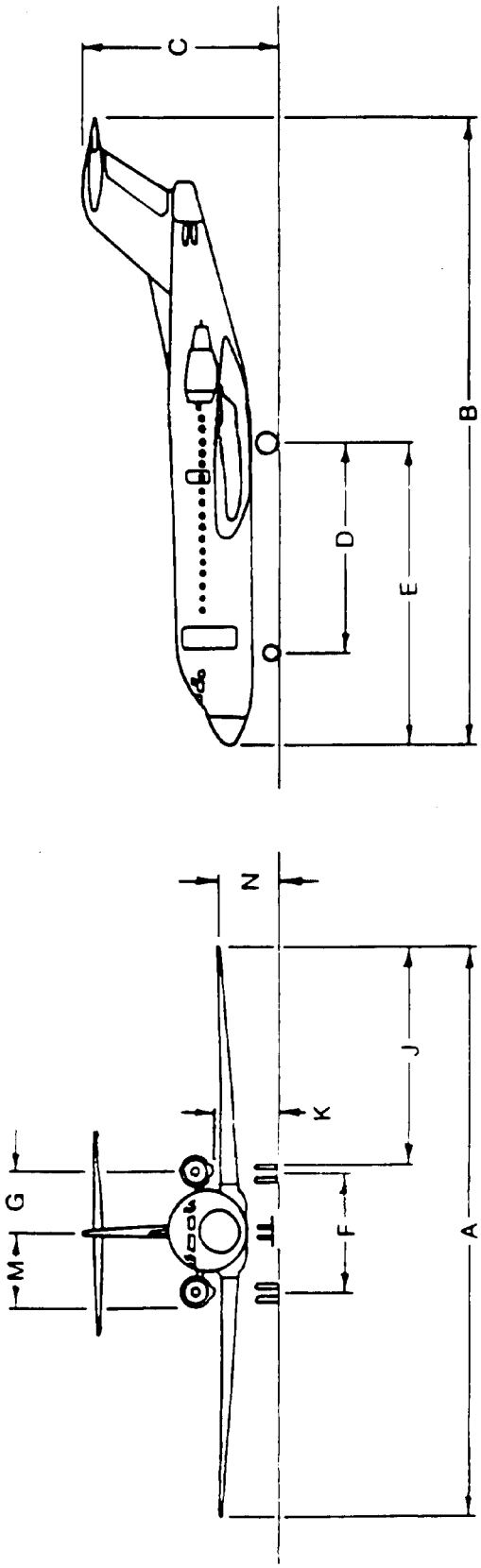

Figure C-89. Fokker F-28

MAXIMUM TIRE PRESSURE, PSI		A	B	C	D	E	F	G	J	K	M	N
MAIN GEAR	NOSE GEAR											
120	94	47.5	54.5	16.2	22.1	28.2	7.8	4.7	19.6	5.9	8.3	7.3

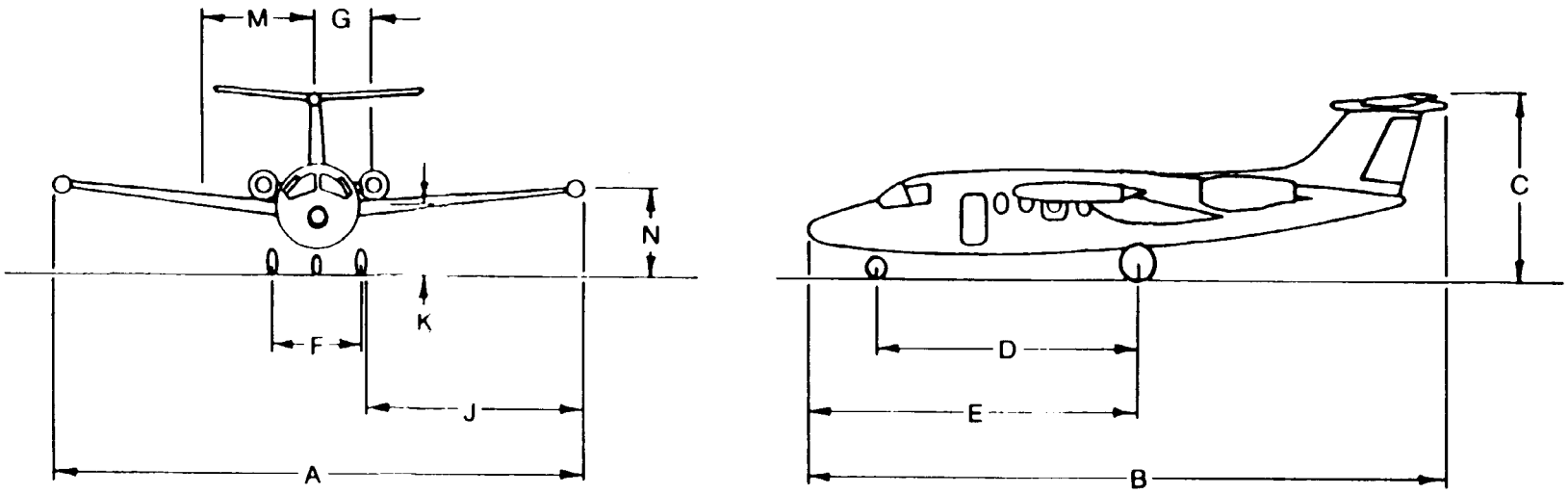

Figure C-90. Hamburger-Flugzeubau HFB-320 Hansa

MAXIMUM TIRE PRESSURE, PSI		A	B	C	D	E	F	G	J	K	M	N
MAIN GEAR	NOSE GEAR											
112	75	47.0	47.4	16.5	18.8	26.3	9.2	4.2	18.6	4.8	19.0	4.3

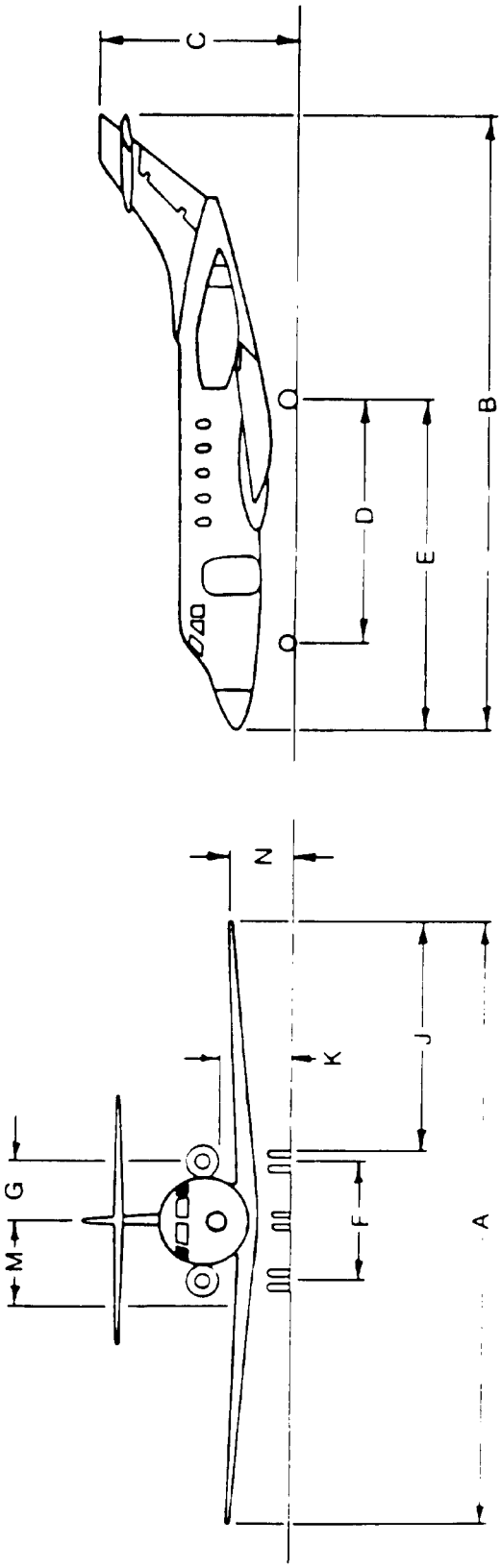

Figure C-91. Hawker Siddeley HS-125

MODEL	MAXIMUM TIRE PRESSURE, PSI		A	B	C	D	E	F	G	J	K	M	N
	MAIN GEAR	NOSE GEAR											
1121	135	65	43.3	50.4	15.8	23.8	†	11.2	3.3	15.8	5.2	23.7	4.9
1123	155	50	43.3	52.3	15.8	23.8	†	12.0	3.3	15.8	5.2	†	†

NOTE MODEL 1121 FORMERLY PRODUCED BY NORTH AMERICAN ROCKWELL AS "JET COMMANDER"

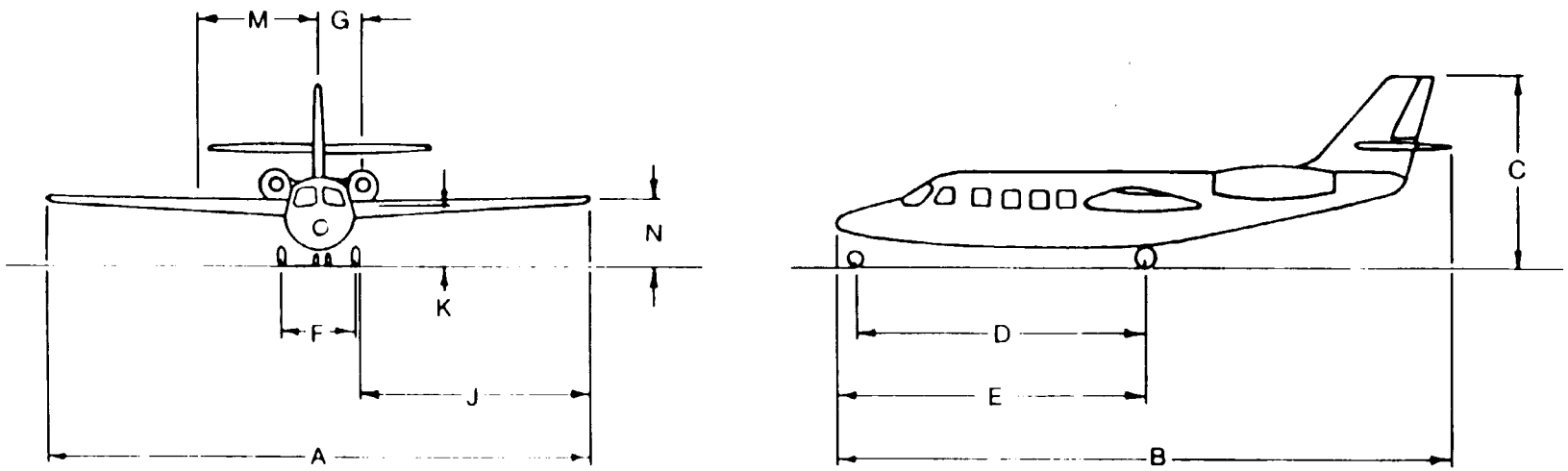

Figure C-92. Israel Aircraft Industries Commodore Jet

MODEL	MAXIMUM TIRE PRESSURE, PSI		A	B	C	D	E	F	G	H	J	K	L	M	N
	MAIN GEAR	NOSE GEAR													
707-120B	170	90	130.8	145.1	41.7	52.3	69.8	22.1	27.2	46.1	52.3	2.3	4.2	36.6	11.6
707-320/420	180	115	142.4	152.9	42.2	59.0	76.4	22.1	32.5	51.4	58.1	2.8	4.6	38.3	12.1
707-320B,C	180	115	145.8	152.9	42.1	59.0	76.4	22.1	32.5	51.4	59.8	2.8	4.6	38.3	12.1
720	145	100	130.8	136.2	41.4	50.7	68.1	21.9	27.2	46.1	52.5	2.6	4.3	32.8	10.8
720B	145	115	130.8	136.8	41.2	50.7	68.1	21.9	27.2	46.1	52.5	2.1	3.8	32.8	10.8

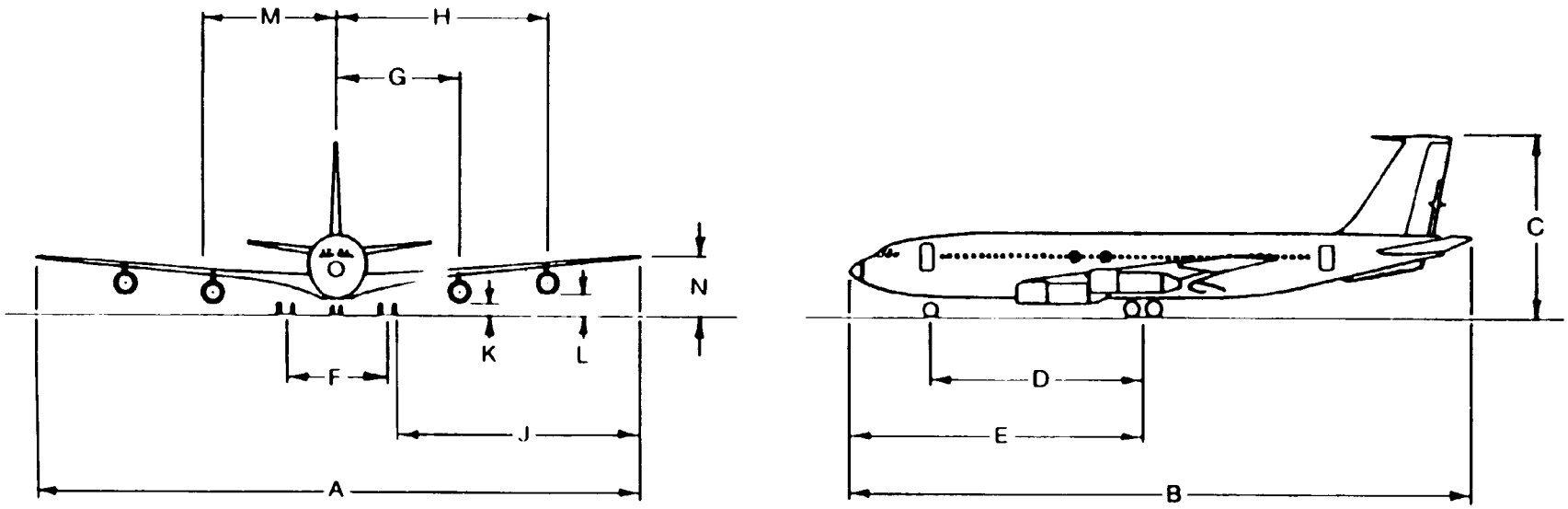

Figure C-93. Boeing 707 and 720

MODEL	MAXIMUM TIRE PRESSURE, PSI		A	B	C	D	E	F	G	J	K	M	N	P
	MAIN GEAR	NOSE GEAR												
100	158	100	108.0	133.2	34.3	53.3	68.3	18.8	9.3	42.5	10.3	14.3	5.7	12.0
100-C	165	100	108.0	133.2	34.3	53.3	68.3	18.8	9.3	42.5	10.3	14.3	5.7	12.0
200	173	100	108.0	153.2	34.9	63.3	78.3	18.8	9.3	42.3	10.3	16.9	4.8	12.0

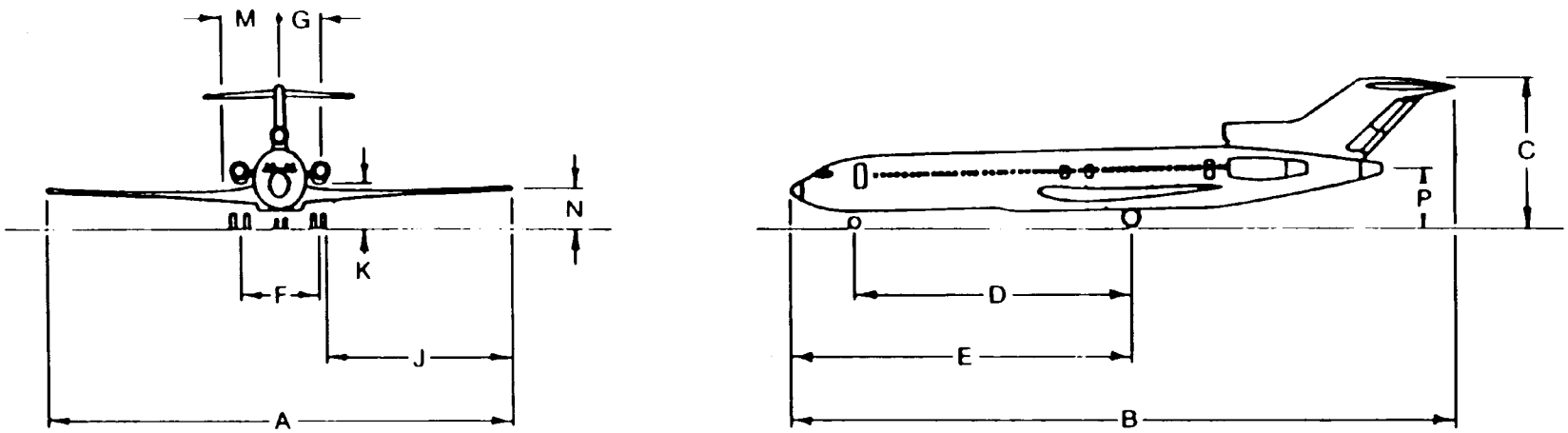

Figure C-94. Boeing 727

MODEL	MAXIMUM TIRE PRESSURE, PSI		A	B	C	D	E	F	G	J	K	M	N
	MAIN GEAR	NOSE GEAR											
100	157	145	93.0	94.0	37.2	34.3	47.3	17.2	15.8	36.1	1.7	9.2	10.0
200	182	140	93.0	100.2	37.3	37.3	50.3	17.2	15.8	36.1	1.7	10.0	10.0
300	195	165	94.8	109.6	36.6	40.8	54.0	17.2	15.8	36.9	1.5	11.0	10.0
400	203	172	94.8	119.6	36.5	46.8	60.0	17.2	15.8	36.9	1.5	12.4	10.0

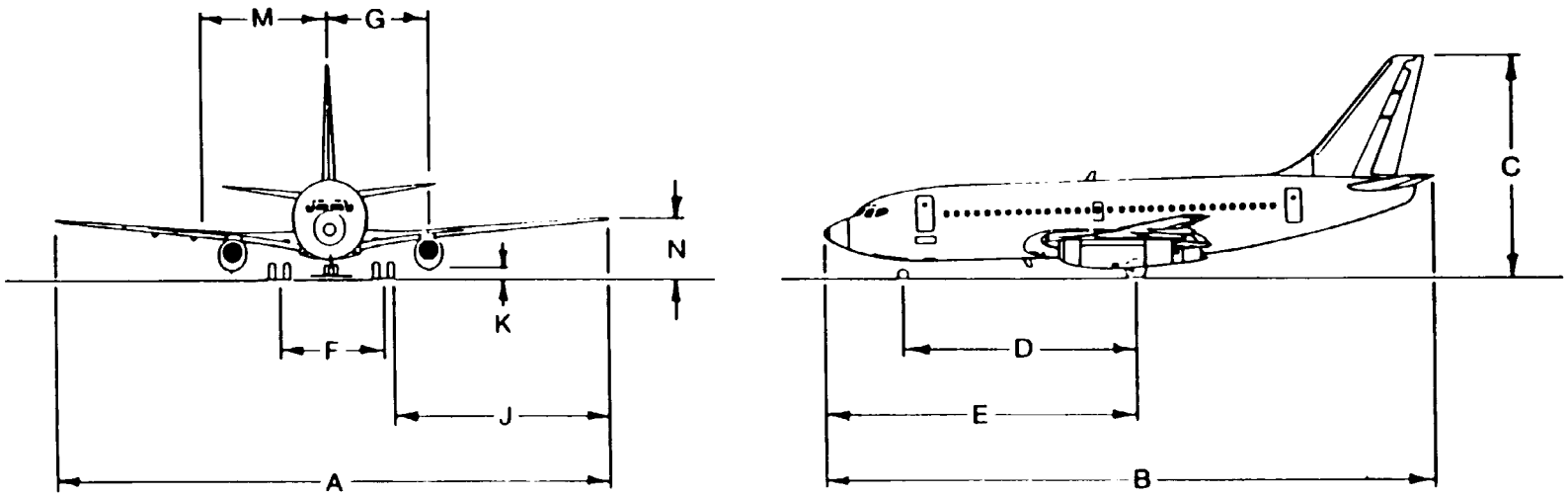

Figure C-95. Boeing 737

MODEL	MAXIMUM TIRE PRESSURE, PSI		A	B	C	D	E	F	G	H	J	K	L	M	N
	MAIN GEAR	NOSE GEAR													
100B 200B,C 300PASS	190	183	195.7	231.8	64.3	84.0	109.4	36.1	39.8	69.8	77.3	3.8	4.9	40.0	17.6
200C 200F CARGO	201	188	195.7	231.8	64.7	84.0	109.4	36.1	39.8	69.8	77.3	3.8	6.0	40.0	17.6
SP	205	209	195.7	184.8	65.8	67.3	92.8	36.1	39.2	69.5	77.3	3.6	5.6	40.0	17.2
400	210	205	211.0	231.8	64.3	84.0	109.4	36.1	39.2	69.5	84.8	3.8	6.0	40.0	24.4

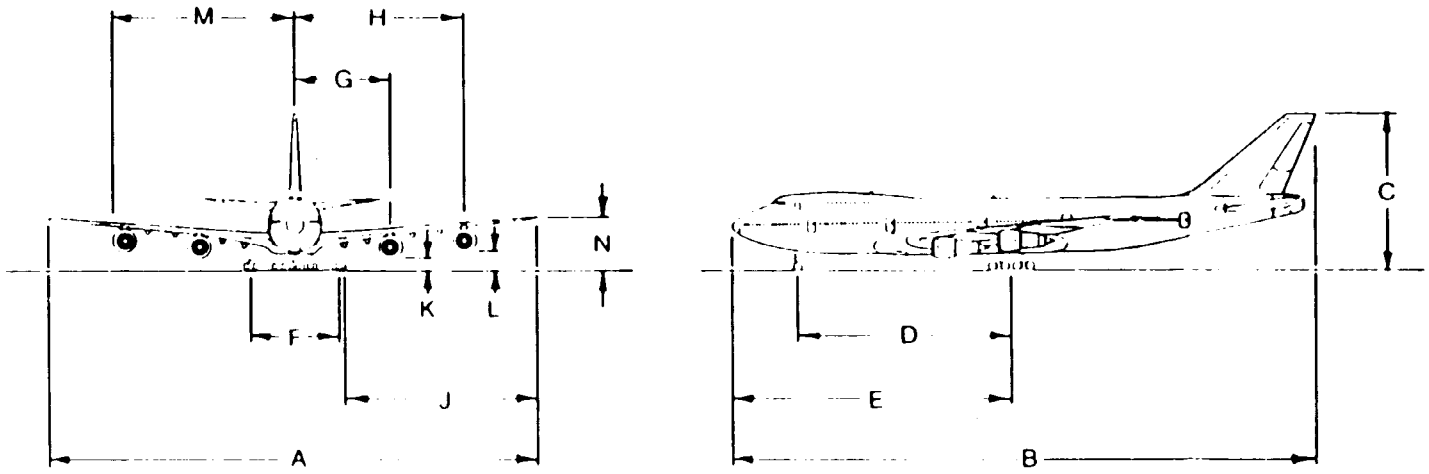

Figure C-96. Boeing 747

MODEL	MAXIMUM TIRE PRESSURE, PSI		A	B	C	D	E	F	G	J	K	M	N
	MAIN GEAR	NOSE GEAR											
200	170	150	124.8	155.3	45.1	60.0	79.3	24.0	21.3	48.2	2.4	35.0	15.3

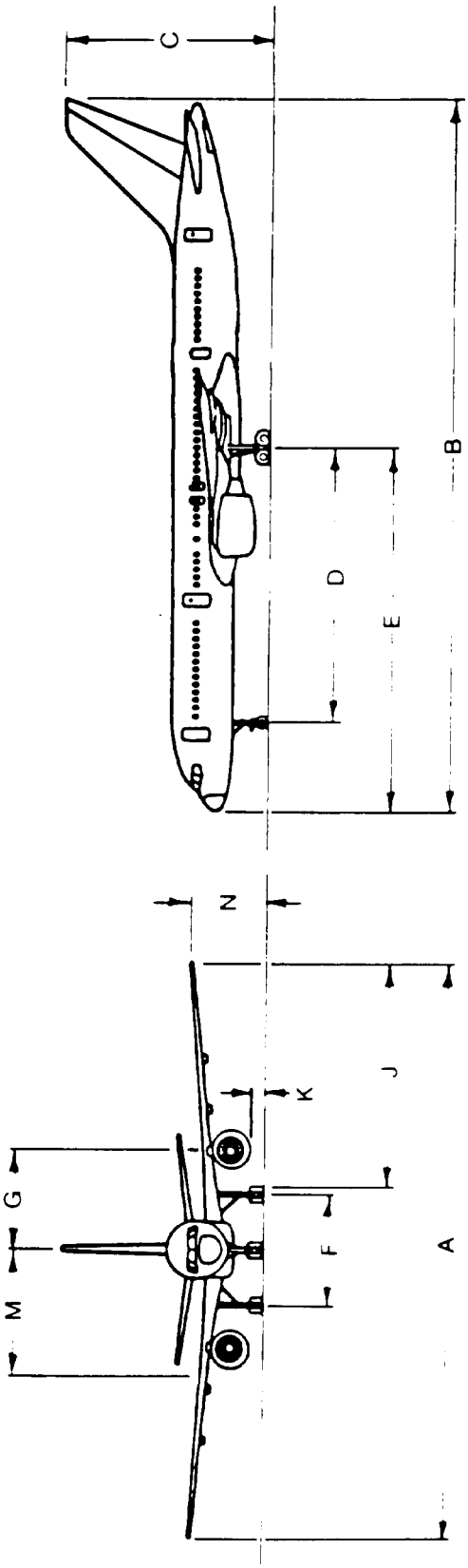

Figure C-97. Boeing 757

MODEL	MAXIMUM TIRE PRESSURE, PSI		A	B	C	D	E	F	G	J	K	M	N
	MAIN GEAR	NOSE GEAR											
200	190	145	156.1	159.2	52.9	64.6	79.5	30.5	26.0	60.1	2.7	36.0	16.3
200ER	190	155	156.1	159.2	52.9	64.6	79.5	30.5	26.0	60.1	2.7	36.0	16.3
300	190	150	156.1	180.3	52.6	74.7	89.6	30.5	26.0	60.1	2.8	41.0	16.1
300ER	190	150	156.1	180.3	52.6	74.7	89.6	30.5	26.0	60.1	2.8	41.0	16.1

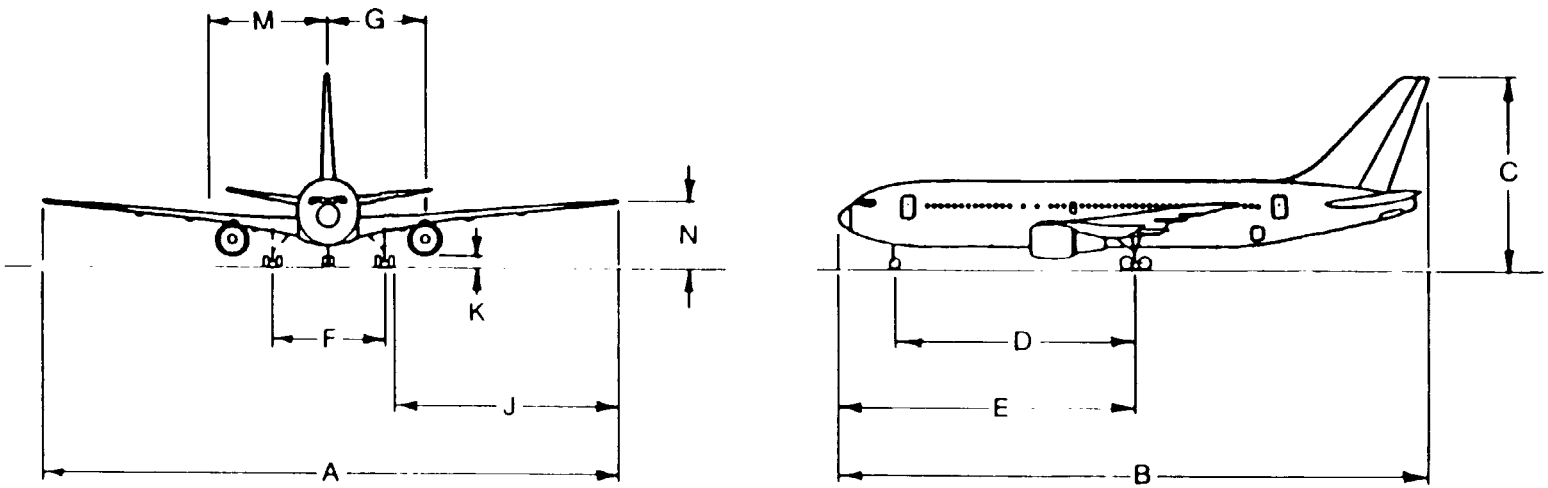

Figure C-98. Boeing 767

MODEL	MAXIMUM TIRE PRESSURE, PSI		A	B	C	D	E	F	G	H	J	K	L	M	N
	MAIN GEAR	NOSE GEAR													
22 (CONVAIR 880)	155	140	120 0	129 3	36 3	53 1	64 8	18 8	22 2	41 3	49 3	2 7	3 9	19 4	10 9
30A (CONVAIR 990)	186	200	120 0	139 8	39 5	57 3	68 9	19 9	22 2	41 3	48 8	2 8	4 0	29 3	12 8

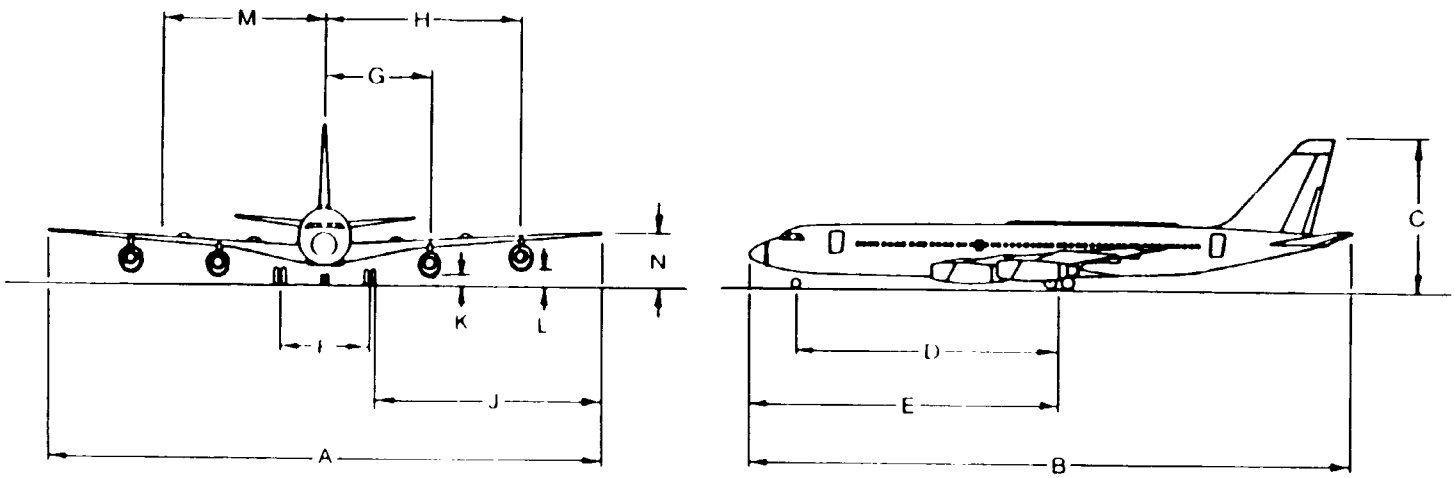

Figure C-99. General Dynamics/Convair 880 and 990

MODEL	MAXIMUM TIRE PRESSURE, PSI		A	B	C	D	E	F	G	J	K	M	N	P
	MAIN GEAR	NOSE GEAR												
1	180	200	155.3	177.7	55.8	70.0	99.8	36.0	34.8	56.7	2.9	38.8	16.1	18.8
100	175	180	155.3	177.7	55.8	70.0	99.8	36.0	34.8	56.7	2.9	38.8	16.1	18.8
200	175	180	155.3	177.7	55.8	70.0	99.8	36.0	34.8	56.7	2.9	38.8	16.1	18.8
500	184	220	155.3	164.2	55.8	61.7	91.4	36.0	34.8	56.7	2.9	34.0	16.1	20.0
500 Ex Wing	184	220	164.3	164.2	55.8	61.7	91.4	36.0	34.8	61.2	2.9	34.0	16.8	20.0

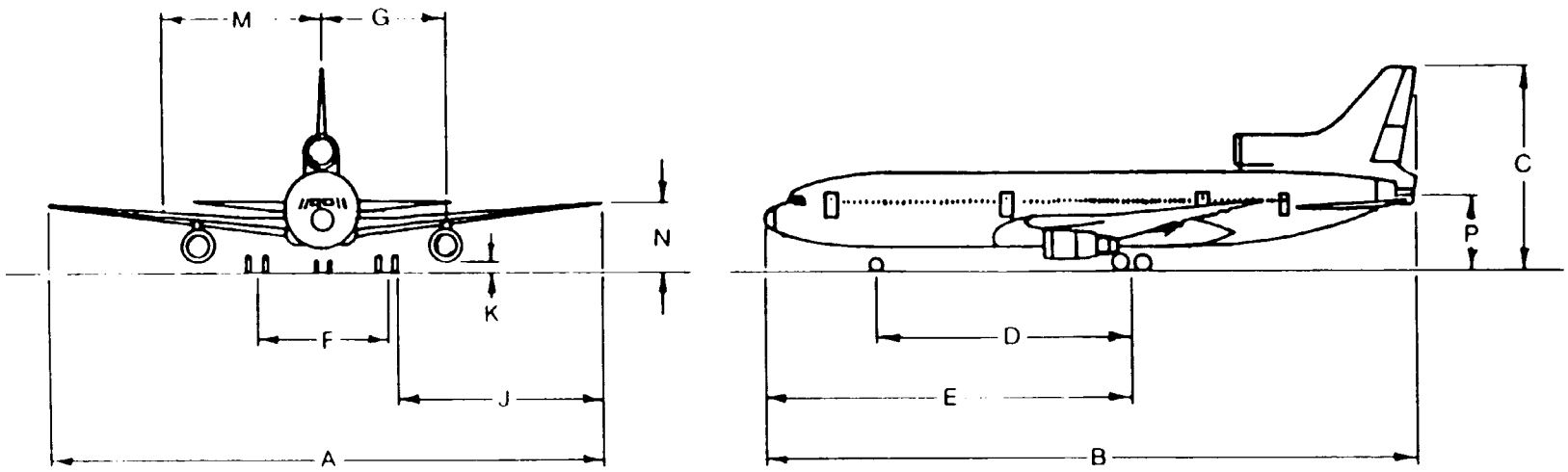

Figure C-100. Lockheed L-1011 Tristar

MODEL	MAXIMUM TIRE PRESSURE, PSI		A	B	C	D	E	F	G	H	J	K	L	M	N
	MAIN GEAR	NOSE GEAR													
43	177	162	142.4	150.7	43.4	57.5	73.4	20.8	25.8	44.6	58.8	3.3	4.7	22.1	15.0
55	186	171	142.4	150.7	43.6	57.5	73.4	20.8	25.8	44.6	58.8	3.1	4.6	22.1	15.0
55F	186	171	142.4	150.7	43.8	57.5	73.4	20.8	25.8	44.6	58.8	3.1	4.6	22.1	14.9
61/71	188	118	142.4	187.4	43.3	77.5	93.4	20.8	25.8	44.6	58.8	3.3	4.6	27.0	14.8
61F/71F	190	119	142.4	187.4	43.2	77.5	93.4	20.8	25.8	44.6	58.8	3.3	4.6	27.0	14.9
62/72	191	174	148.4	157.5	43.3	60.8	76.7	20.8	25.8	44.6	61.7	2.5	4.2	39.3	15.4
62F/72F	191	174	148.4	157.5	43.3	60.8	76.7	20.8	25.8	44.6	61.7	2.5	4.2	39.3	15.4
63/73	196	147	148.4	187.4	43.0	77.5	93.4	20.8	25.8	44.6	61.7	2.6	4.2	38.8	15.3
63F/73F	196	147	148.4	187.4	43.2	77.5	93.4	20.8	25.8	44.6	61.7	2.6	4.2	38.8	15.3

NOTE: REDUCE DIMENSION (K AND L) BY 0.8 FEET FOR DC-8-70 SERIES AIRCRAFT

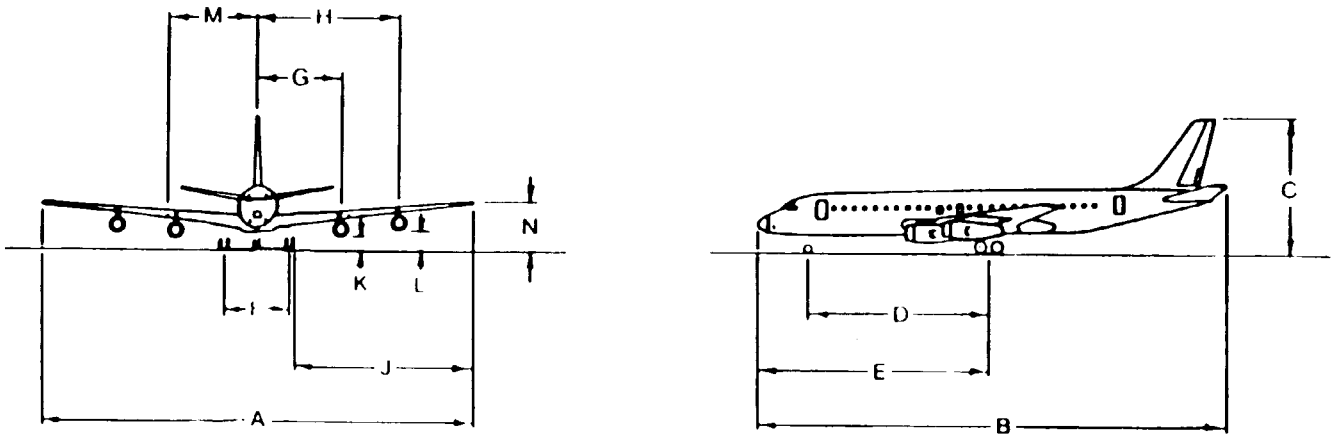

Figure C-101. McDonnell Douglas DC-8

MODEL	MAXIMUM TIRE PRESSURE, PSI		A	B	C	D	E	F	G	J	K	M	N
	MAIN GEAR	NOSE GEAR											
15	130	118	89.4	104.4	27.6	43.7	51.3	16.4	8.9	35.0	6.4	8.5	7.2
15F	130	118	89.4	104.4	27.6	43.7	51.3	16.4	8.9	35.0	6.4	8.5	7.2
21	143	131	93.3	104.4	27.4	43.7	51.3	16.4	8.9	36.9	6.4	8.5	7.3
32	155	140	93.3	119.3	27.8	53.2	60.8	16.4	8.9	36.9	6.4	10.3	7.3
33F	155	140	93.3	119.3	27.8	53.2	60.8	16.4	8.9	36.9	6.4	10.3	7.3
41	160	148	93.3	125.6	28.4	56.2	63.7	16.4	8.9	37.0	6.9	10.9	7.2
51	172	157	93.3	133.6	28.8	60.9	68.5	16.0	8.9	37.0	6.8	11.8	7.1
81 82,88 83	170 184 195	155 155 170	107.8	147.8	30.3	72.4	80.0	16.7	8.9	43.6	7.5	14.0	8.6
87	184	192	107.8	130.4	31.3	62.9	70.5	16.7	8.9	43.6	7.5	12.2	8.7

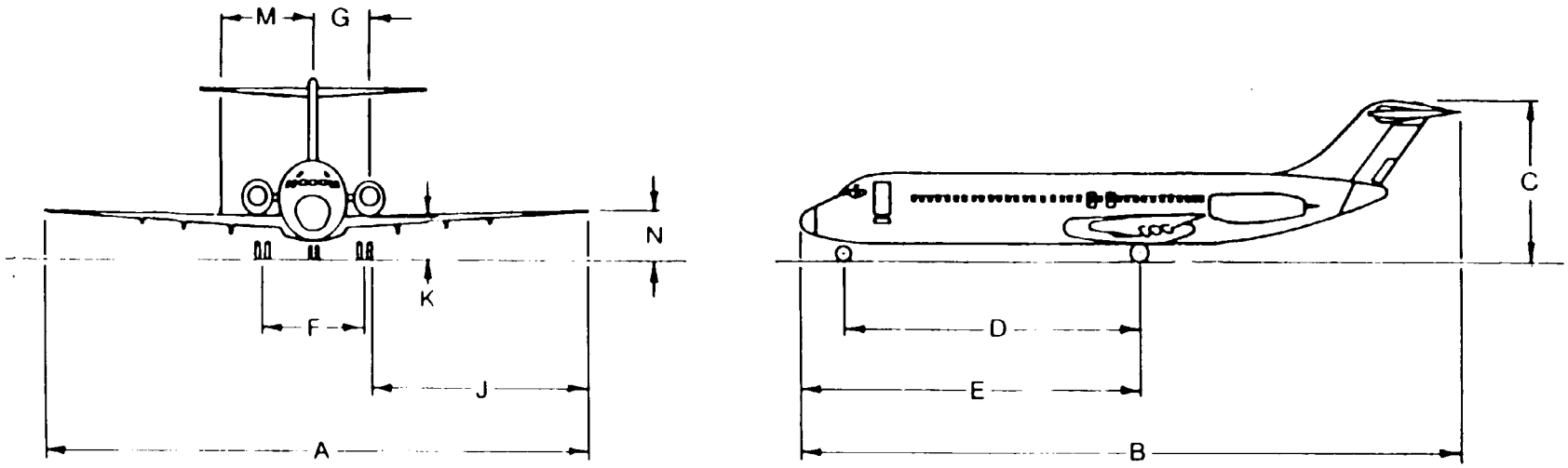

Figure C-102. McDonnell Douglas DC-9 and MD-80 Series

MODEL	MAXIMUM TIRE PRESSURE, PSI		A	B	C	D	E	F	G	J	K	M	N	P
	MAIN GEAR	NOSE GEAR												
10	195	165	155.3	182.3	58.4	72.4	100.3	35.0	26.8	57.1	2.8	27.0	14.4	29.6
30	177	185	165.3	181.6	58.6	72.4	100.3	35.0	26.8	62.1	2.8	27.6	14.3	29.5
40	177	185	165.3	182.3	58.6	72.4	100.3	35.0	26.8	62.1	2.8	27.6	14.3	29.5

NOTE MODEL 30 AND 40 ARE EQUIPPED WITH CENTERLINE TWIN TIRES IN MAIN GEAR VICINITY THESE TWIN TIRES HAVE PRESSURES OF 153 PSI

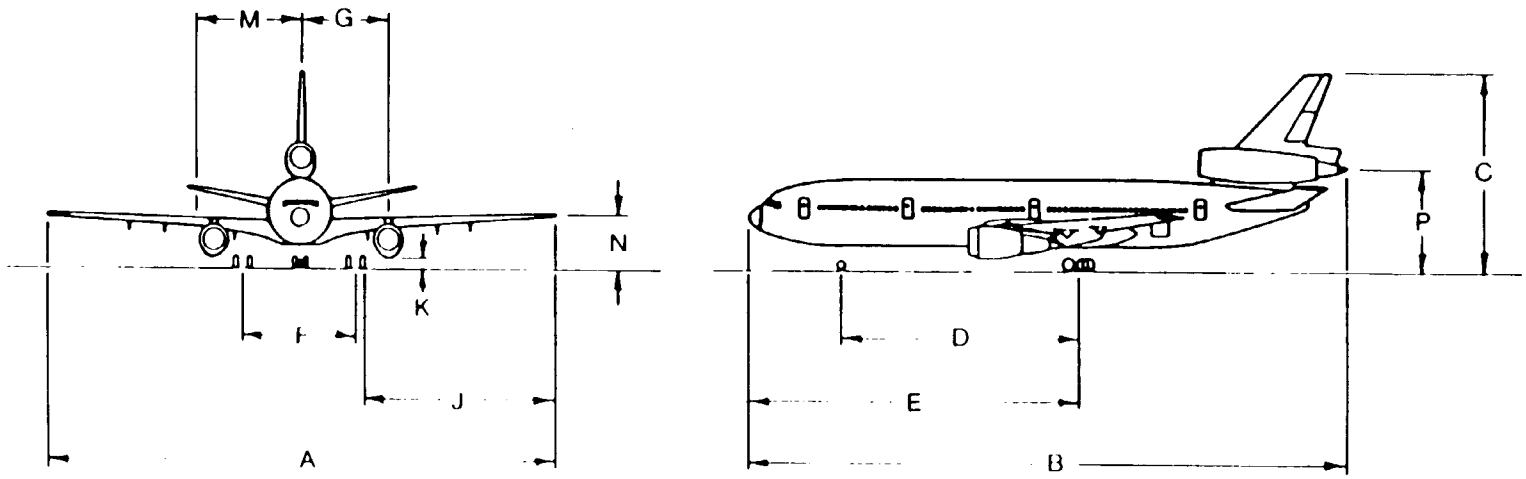

Figure C-103. McDonnell Douglas DC-10

MAXIMUM TIRE PRESSURE, PSI		A	B	C	D	E	F	G	J	K	M	N
MAIN GEAR	NOSE GEAR											
155	109	112.5	105.0	28.3	38.5	55.5	17.1	7.8	46.6	7.2	33.2	7.4

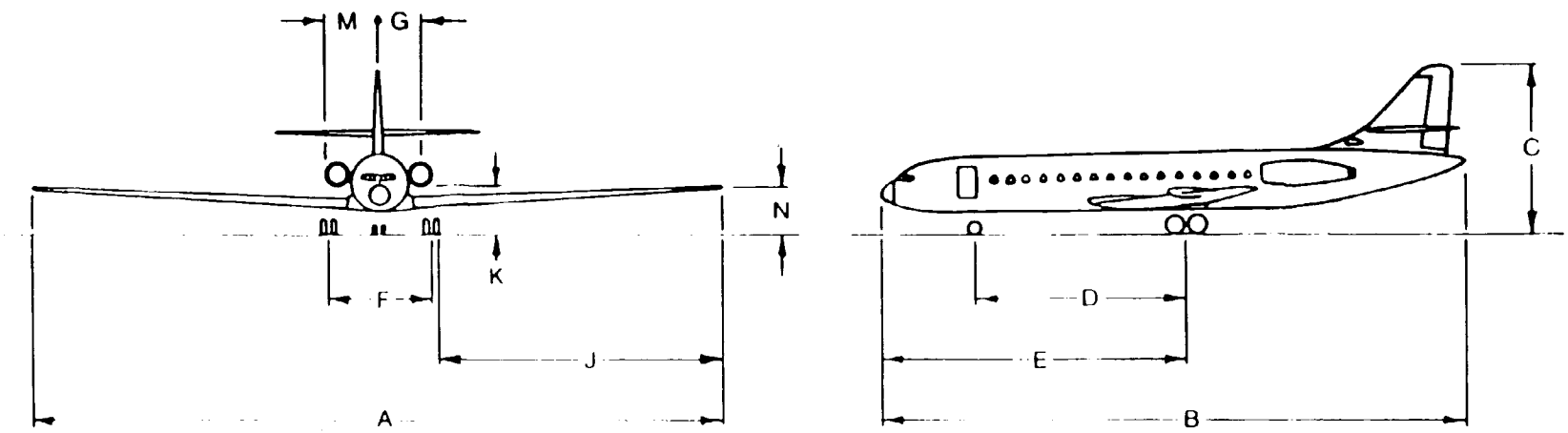

Figure C-104. Aerospatiale/Sud-Aviation SE-210 Caravelle

MODEL	MAXIMUM TIRE PRESSURE, PSI		A	B	C	D	E	F	G	J	K	M	N
	MAIN GEAR	NOSE GEAR											
200	135	112	88.5	93.5	24.5	33.1	48.4	14.3	8.2	35.8	6.6	7.7	7.3
400	153	120	88.5	93.5	24.5	33.1	48.4	14.3	8.2	35.8	6.6	7.7	7.3
500	177	120	93.5	107.3	24.5	41.4	56.8	14.3	8.2	42.7	6.6	7.7	7.3

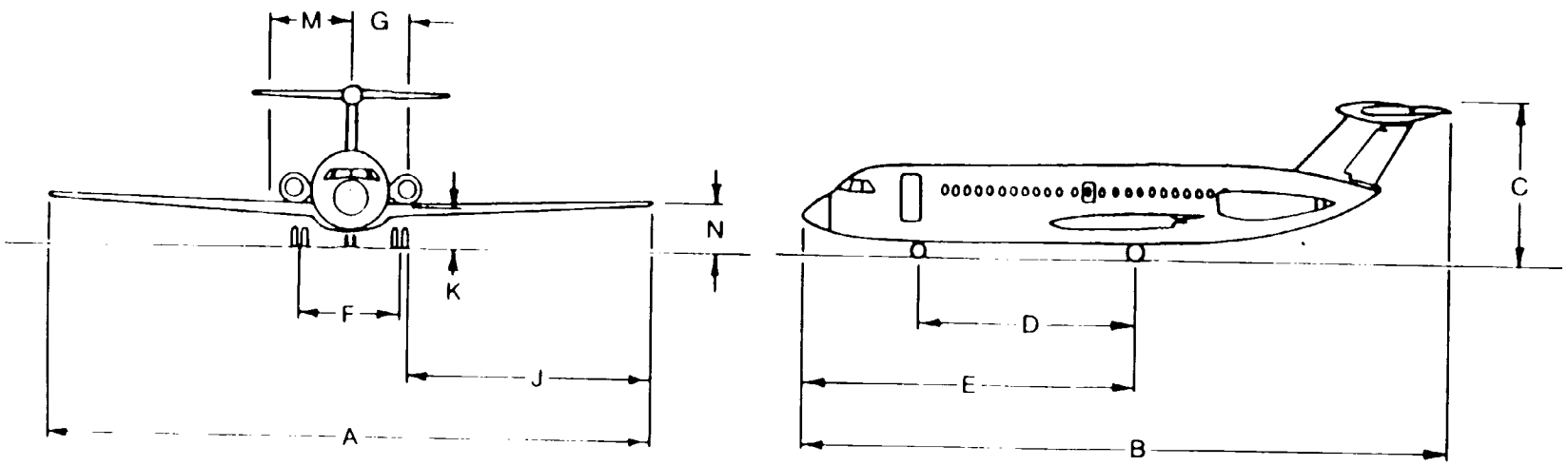

Figure C-105. B.A.C. One-Eleven

MODEL	MAXIMUM TIRE PRESSURE, PSI		A	B	C	D	E	F	G	H	J	K	L	M	N
	MAIN GEAR	NOSE GEAR													
1100	115	100	146.2	158.8	39.5	65.8	†	21.4	†	†	†	†	†	†	†
1150	†	†	146.2	171.7	39.5	72.1	†	21.4	†	†	†	†	†	†	†

NOTE: SERIES 1150 KNOWN AS SUPER VC 10

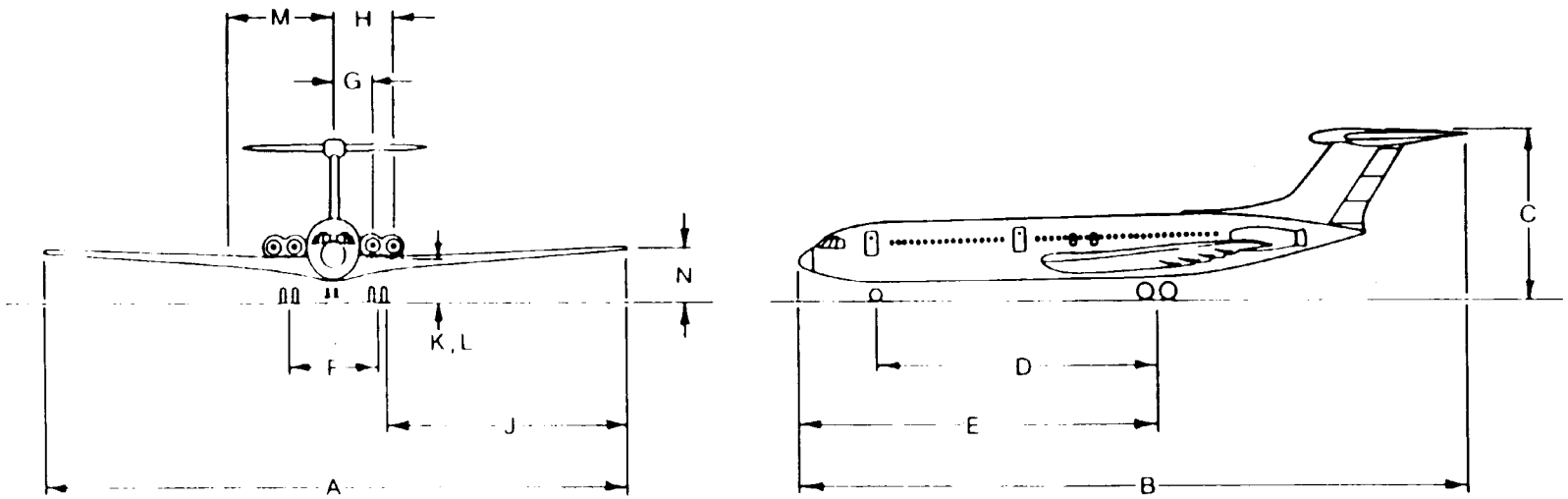

Figure C-106. B.A.C./Vickers VC-10

MAXIMUM TIRE PRESSURE, PSI		A	B	C	D	E	F	G	H	J	K	L	M	N
MAIN GEAR	NOSE GEAR													
135	114	141.8	174.3	40.5	80.4	†	22.3	†	†	58.0	†	†	†	†

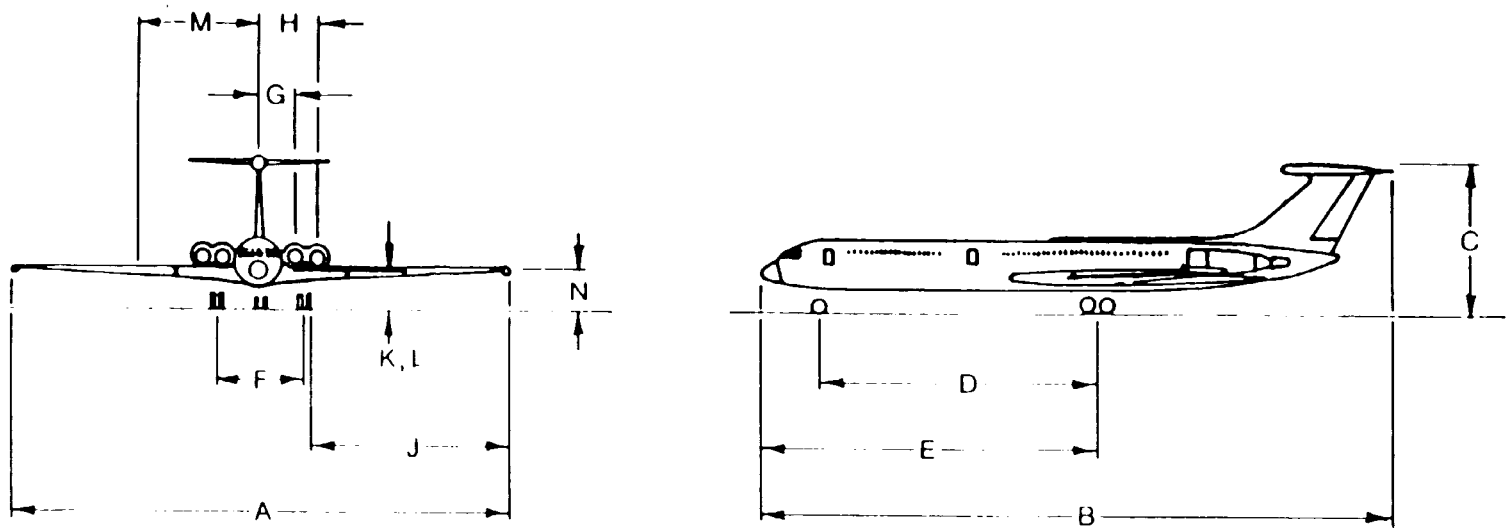

Figure C-107. Ilyushin IL-62

MODEL	MAXIMUM TIRE PRESSURE, PSI		A	B	C	D	E	F	G	J	K	M	N
	MAIN GEAR	NOSE GEAR											
A300B2	180	125	147.1	175.5	55.5	60.8	82.7	31.5	26.0	55.8	2.6	37.3	19.3
A300B4	206	131	147.1	175.5	55.5	60.8	82.7	31.5	26.0	55.4	2.6	37.3	19.3
A300 -600	180	136	147.1	177.5	54.7	61.1	82.9	31.5	26.0	55.4	3.3	37.9	18.8
A310 -300	163	131	144.1	153.2	52.3	49.9	71.8	31.5	25.3	54.2	2.2	34.2	16.9
A320	†	†	111.3	123.3	38.3	41.5	58.1	24.9	18.8	40.8	1.8	15.1	13.4

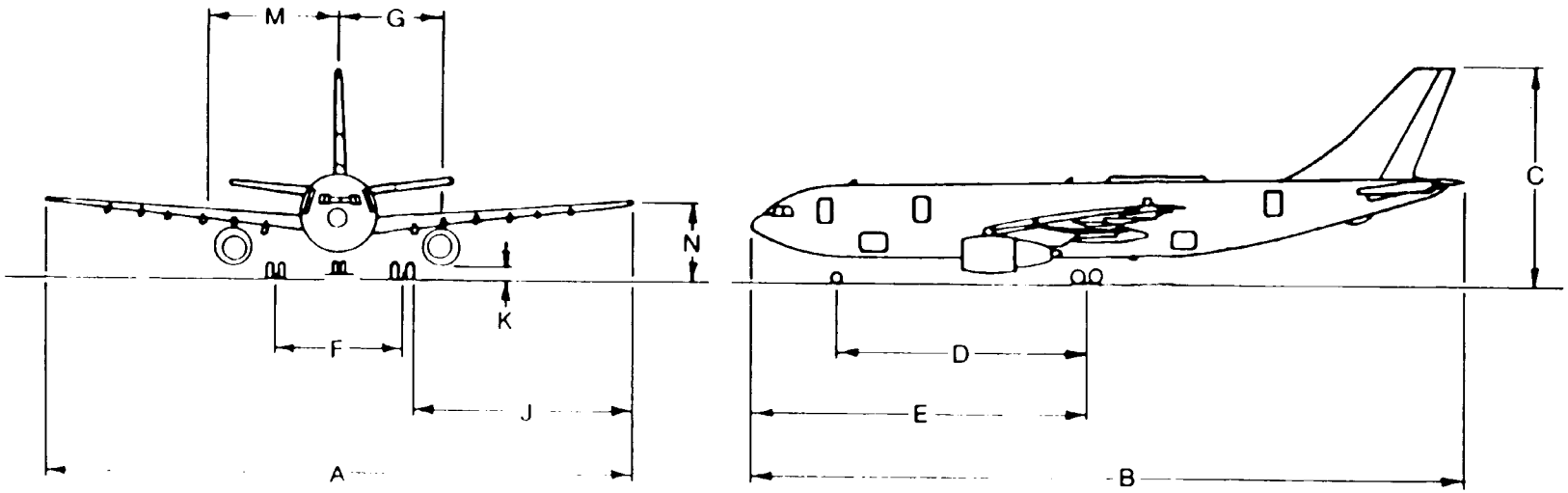

Figure C-108. Airbus Industries A300, A310, A320

MAXIMUM TIRE PRESSURE, PSI		A	B	C	D	E	F	G	J	K	M	N	*TIP OF PROBE
MAIN GEAR	NOSE GEAR												
232	181	83.8	205.4	37.4	59.7	122.8	25.3	18.1	27.3	6.1	32.4	8.5	8.5

*NOSE FULLY LOWERED

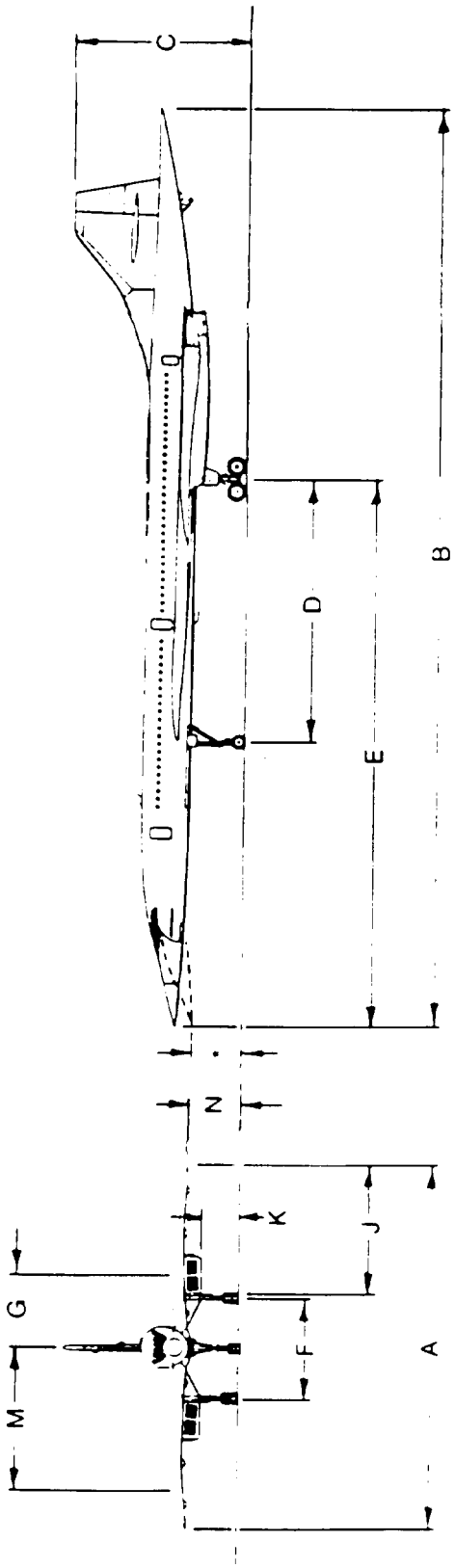

Figure C-109. B.A.C./SNIAS Concorde

MODEL	MAXIMUM TIRE PRESSURE, PSI		A	B	C	D	E	F	G	H	J	K	L	M	N
	MAIN GEAR	NOSE GEAR													
100	122	113	86.4	85.8	28.3	33.1	40.6	15.5	13.6	22.3	33.7	5.0	4.7	15.5	13.9
200	122	113	86.4	93.7	28.3	36.8	44.2	15.5	13.6	22.3	33.7	5.0	4.6	15.5	13.9
300	122	113	86.4	104.2	28.1	36.8	48.8	15.5	13.6	22.3	33.7	5.0	4.6	15.5	13.9

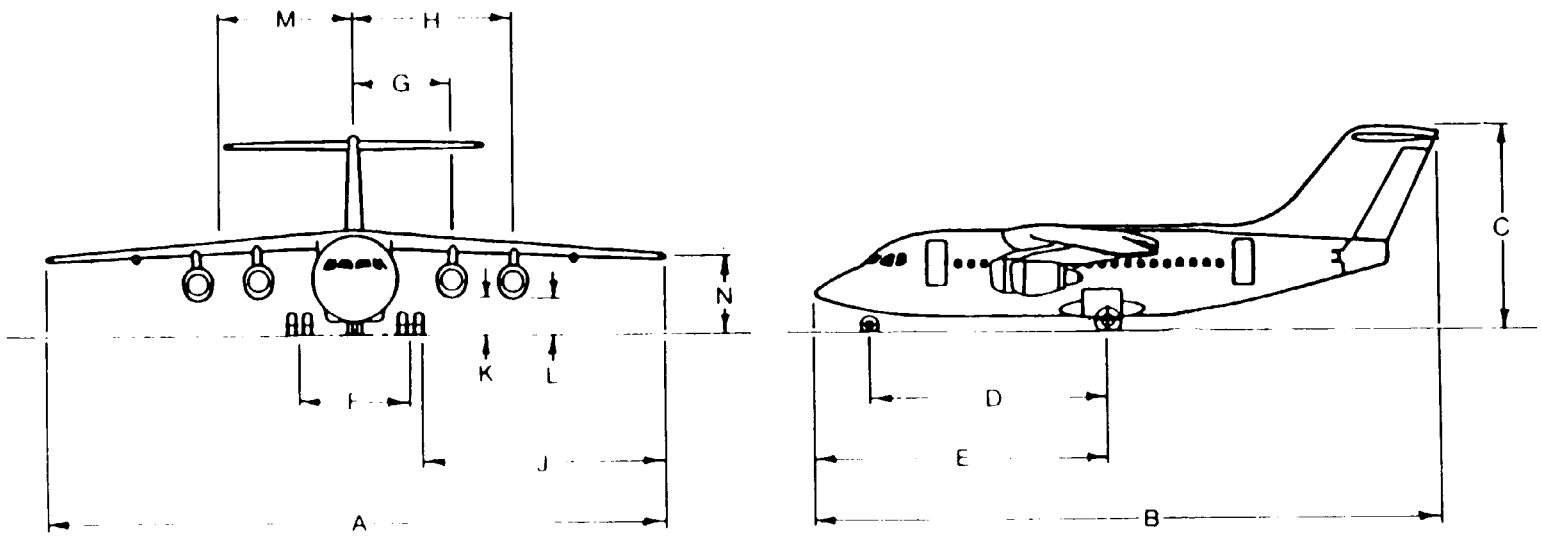

Figure C-110. British Aerospace 146

MAIN ROTOR BLADES, NO.	CONTACT AREA, IN^2		A	B	C	D	D1	E	F	G	H	J
	FORWARD	AFT										
3	56.0	56.0	36.2	42.4	10.1	5.3	10.8	7.8	†	†	6.3	†

SILHOUETTES NOT AVAILABLE

Figure C-111. Aerospatiale 315B, Lama

MAIN ROTOR BLADES, NO.	MAXIMUM TIRE PRESSURE, PSI		A	B	C	D	E	F	G	H	J
	FORWARD GEAR	AFT GEAR									
4	85	85	49.5	59.8	16.9	13.2	7.9	†	†	10.0	14.4

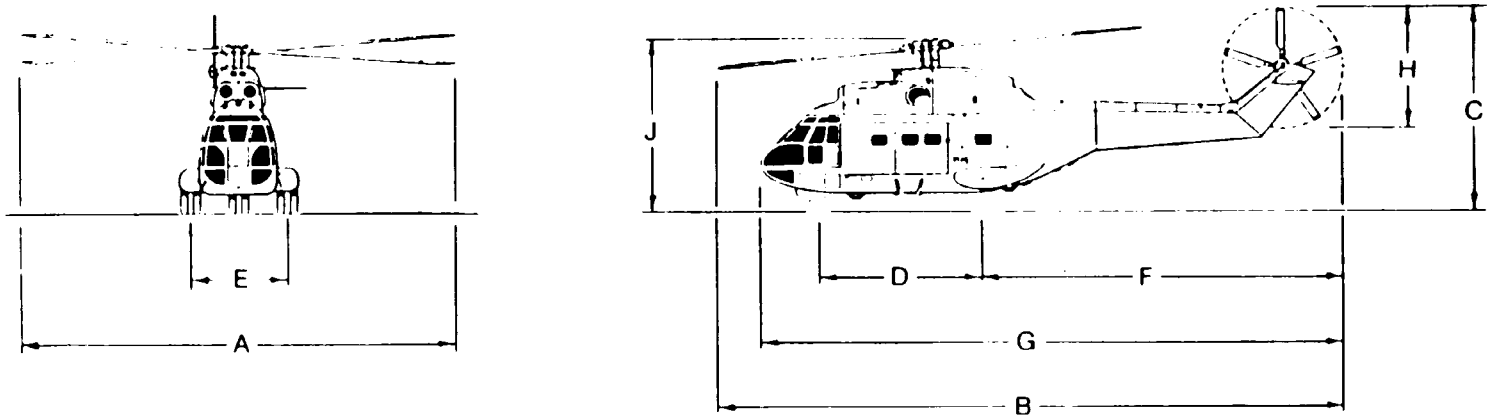

Figure C-112. Aerospatiale 330J, Puma

MAIN ROTOR BLADES, NO.	MAXIMUM TIRE PRESSURE, PSI		A	B	C	D	E	F	G	H	J
	FORWARD GEAR	AFT GEAR									
4	85	85	51.2	61.4	16.2	17.2	9.8	†	†	10.0	15.2

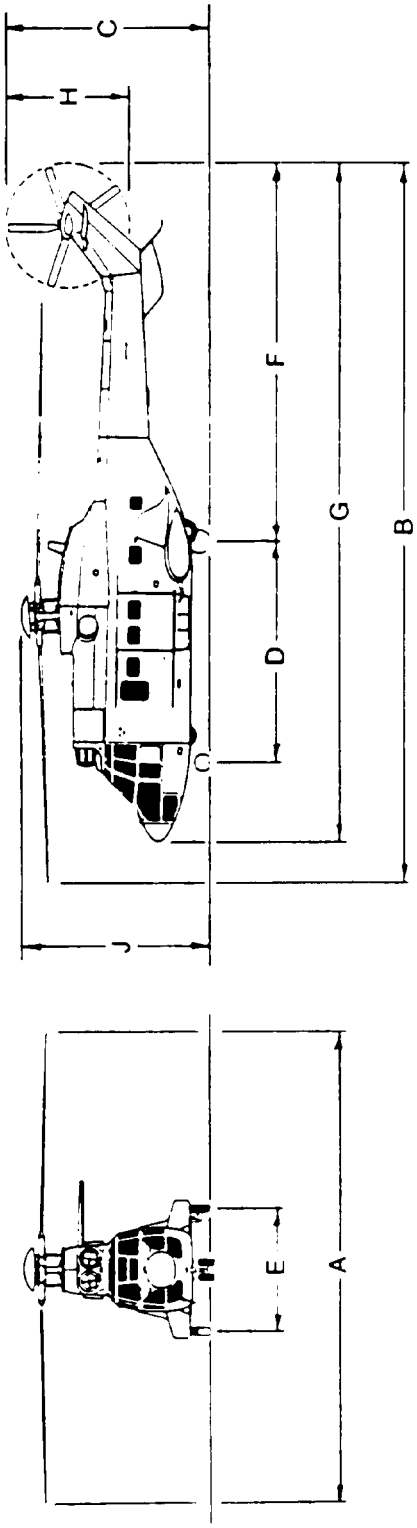

Figure C-113. Aerospatiale 332C/L, Super Puma