MODEL	MAXIMUM TIRE PRESSURE, PSI		A	B	C	D	F
	MAIN GEAR	NOSE GEAR					
IV	100	85	46.3	59.4	16.7	19.2	15.0
SA-226TC "Metro"	100	85	46.3	59.4	16.7	19.2	15.0

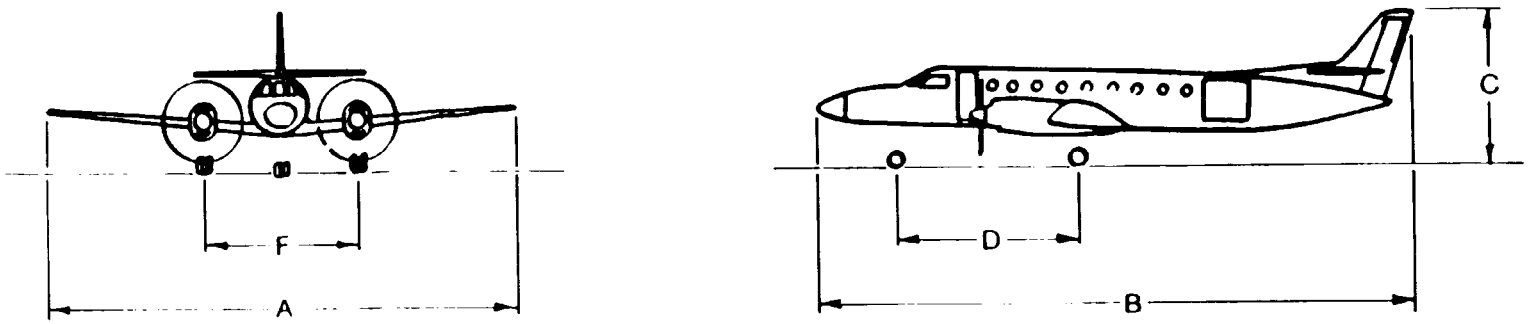

Figure C-64. Swearingen Merlin IV and Metro

MAXIMUM TIRE PRESSURE, PSI		A	B	C	D	F
MAIN GEAR	NOSE GEAR					
38	33	65.0	51.8	19.5	14.9	12.2

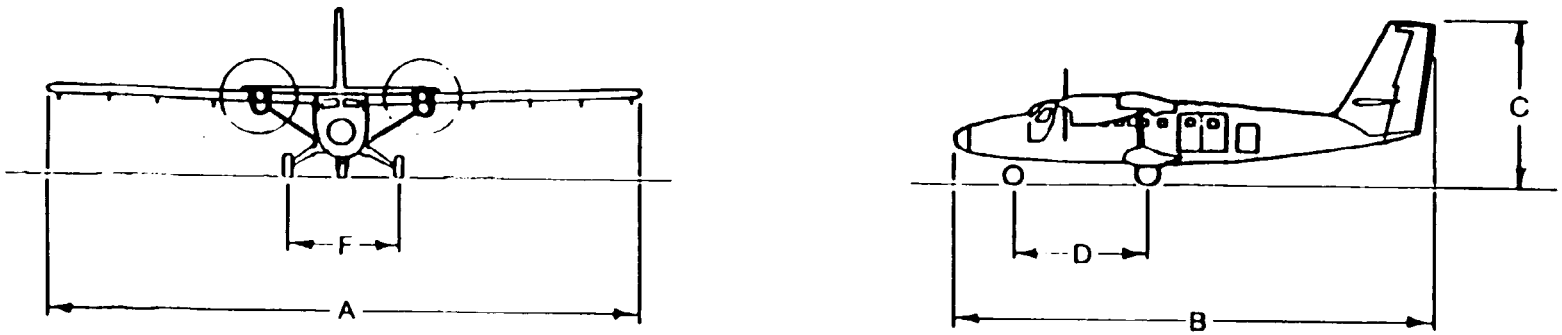

Figure C-65. De Havilland Canada DHC-6 Twin Otter

MAXIMUM TIRE PRESSURE, PSI		A	B	C	D	F
MAIN GEAR	NOSE GEAR					
†	†	57.0	39.3	13.3	†	13.7

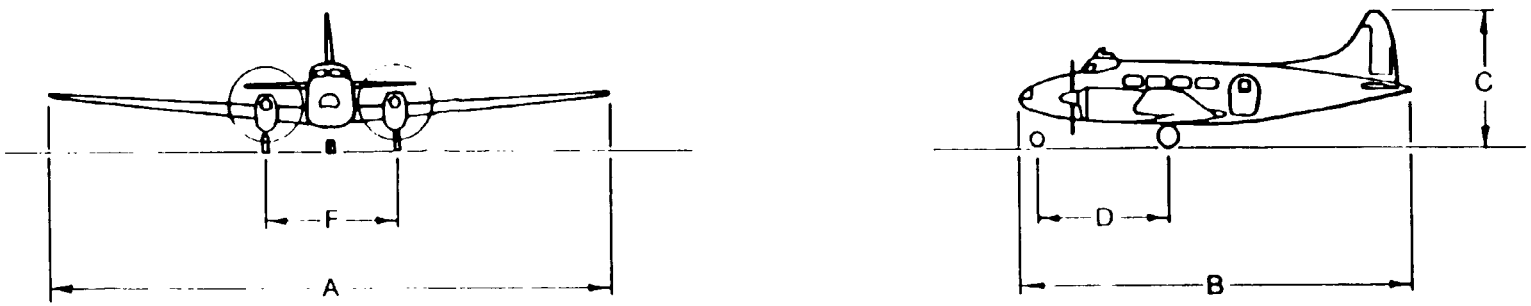

Figure C-66. Hawker Siddeley Dove

MAXIMUM TIRE PRESSURE, PSI		A	B	C	D	F
MAIN GEAR	NOSE GEAR					
63	55	39.2	39.5	13.7	14.4	7.9

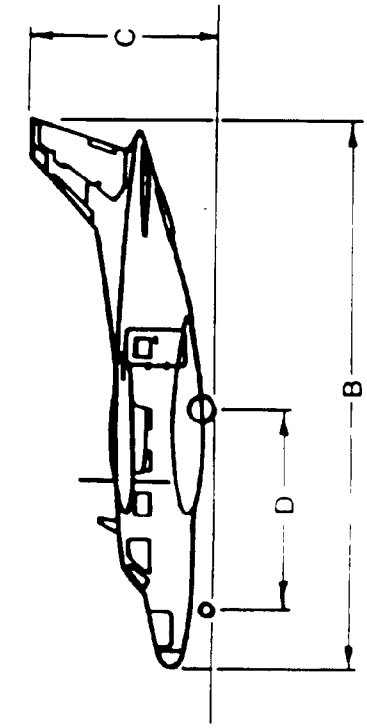

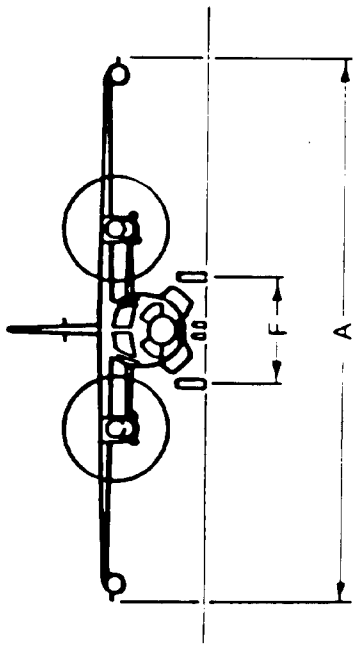

Figure C-67. Mitsubishi MU-2

MODEL	MAXIMUM TIRE PRESSURE, PSI		A	B	C	D	F
	MAIN GEAR	NOSE GEAR					
SC 7	39	40	64.9	40.1	15.0	14.8	13.8
SC.7-3M	40	40	64.9	40.1	15.0	14.8	13.8
330	78	55	74.7	58.0	16.3	20.2	13.9
330-200	79	55	74.7	58.0	16.3	20.2	13.9
360	110	60	74.8	70.8	23.7	23.2	13.9

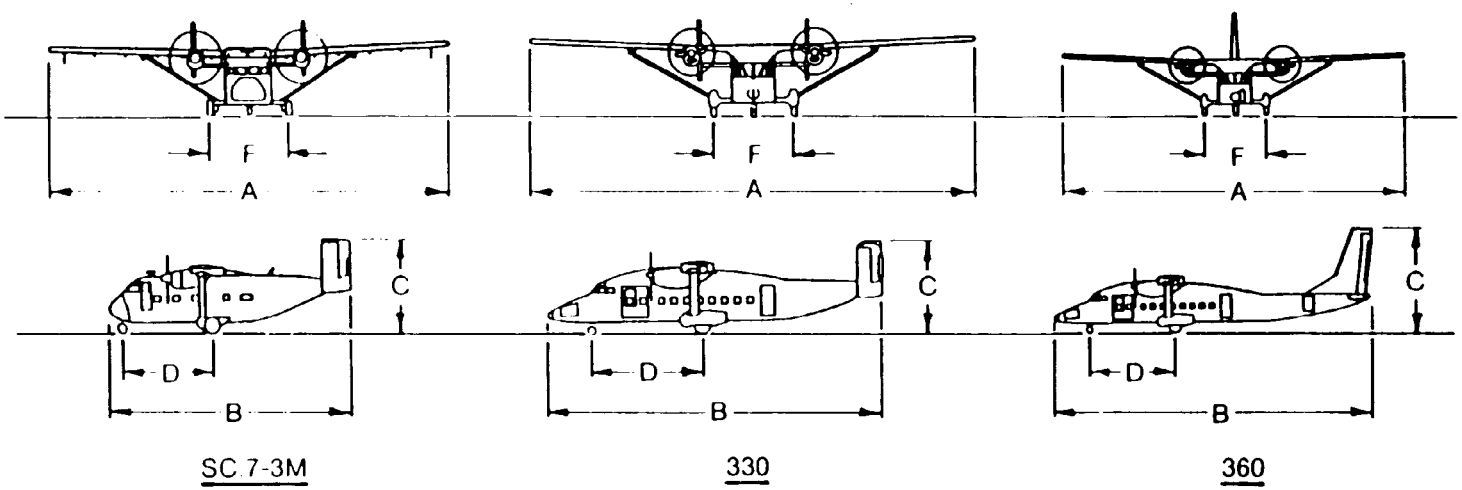

Figure C-68. Short Brothers Variants

MODEL	MAXIMUM TIRE PRESSURE, PSI		A	B	C	D	E	F	G	J	K	M	N
	MAIN GEAR	NOSE GEAR											
240	100	90	91.8	74.7	26.9	24.8	32.8	25.0	12.5	32.2	1.0	14.7	9.0
340	65	55	105.3	79.2	28.2	26.2	34.1	25.0	12.5	38.6	1.0	14.7	11.0
440	68	56	105.3	81.5	28.2	26.2	36.4	25.0	12.5	38.6	1.0	14.7	11.0
580	90	64	105.3	81.5	29.2	26.2	36.4	25.0	12.5	38.6	1.0	14.7	11.0
600	109	93	91.8	74.7	26.9	24.8	32.8	25.0	12.5	32.2	1.3	14.7	9.0
640	75	60	105.3	81.5	28.2	26.2	36.4	25.0	12.5	38.6	1.1	14.7	11.0

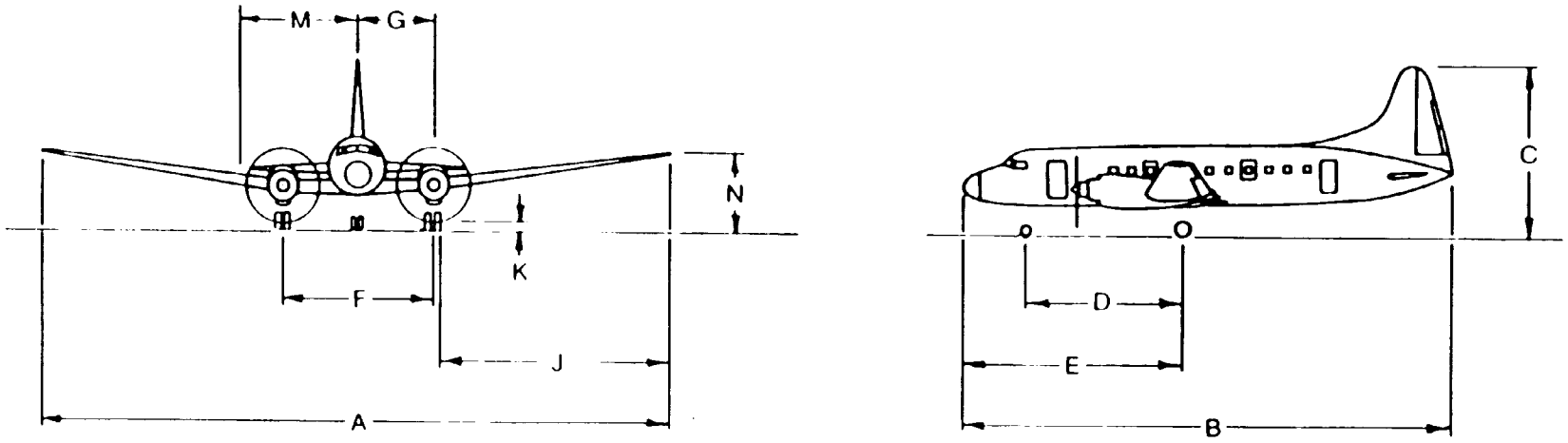

Figure C-69. Convair-Liner and Turboprop Conversions

MAXIMUM TIRE PRESSURE, PSI		A	B	C	D	E	F	G	J	K	M	N
MAIN GEAR	NOSE GEAR											
56	†	95.0	64.5	23.5	37.9	18.5	18.5	9.3	37.6	1.3	9.3	9.3

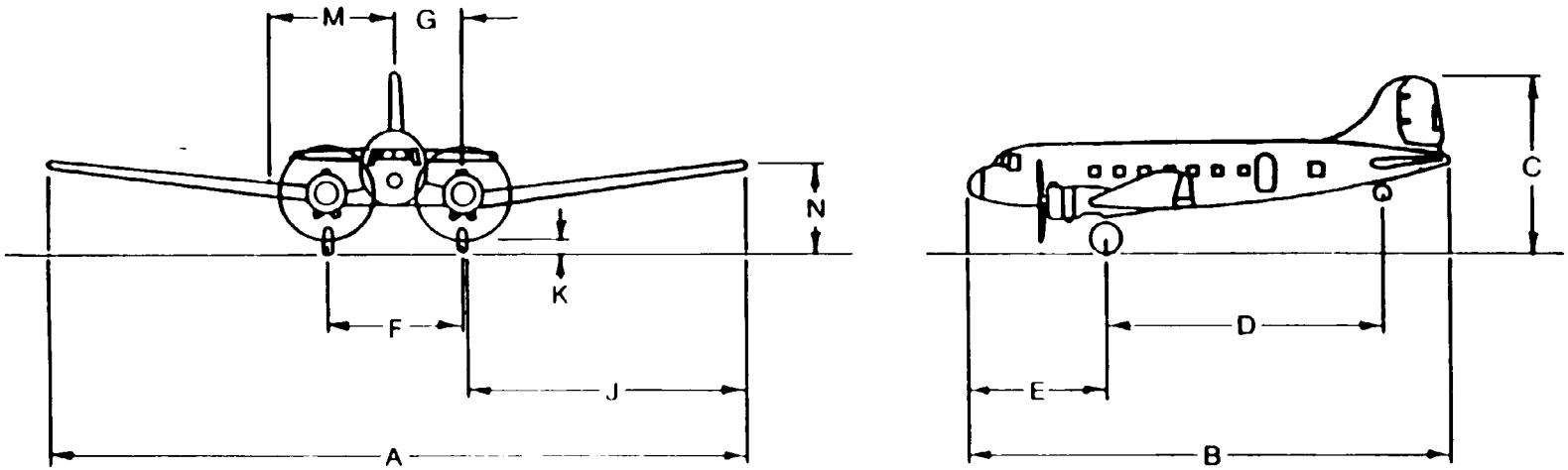

Figure C-70. Douglas DC-3

MODEL	MAXIMUM TIRE PRESSURE, PSI		A	B	C	D	E	F	G	J	K	M	N
	MAIN GEAR	NOSE GEAR											
F-27	93	64	95.2	77.2	27.5	28.7	34.5	23.7	11.8	34.5	2.8	16.5	11.8
FH-227	107	70	95.2	83.7	27.6	34.6	40.3	23.7	11.8	34.8	3.2	12.3	11.8

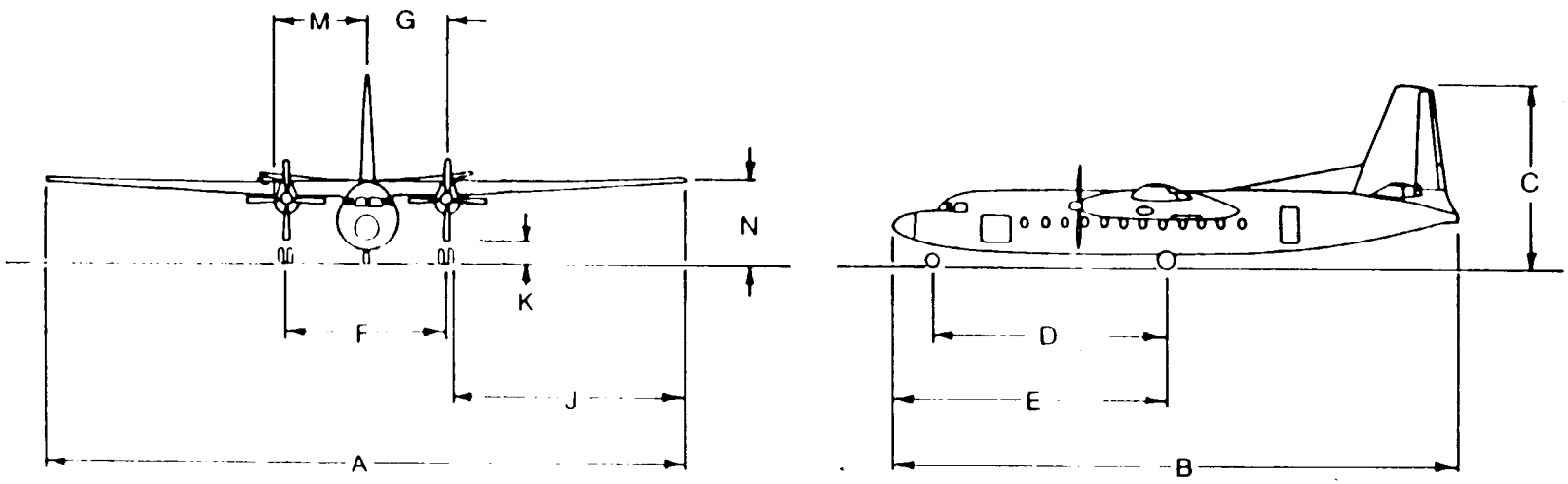

Figure C-71. Fairchild F-27 and Variants

MAXIMUM TIRE PRESSURE, PSI		A	B	C	D	E	F	G	J	K	M	N
MAIN GEAR	NOSE GEAR											
†	†	78.3	63.8	22.8	19.8	26.7	24.6	12.1	25.5	1.5	12.1	8.7

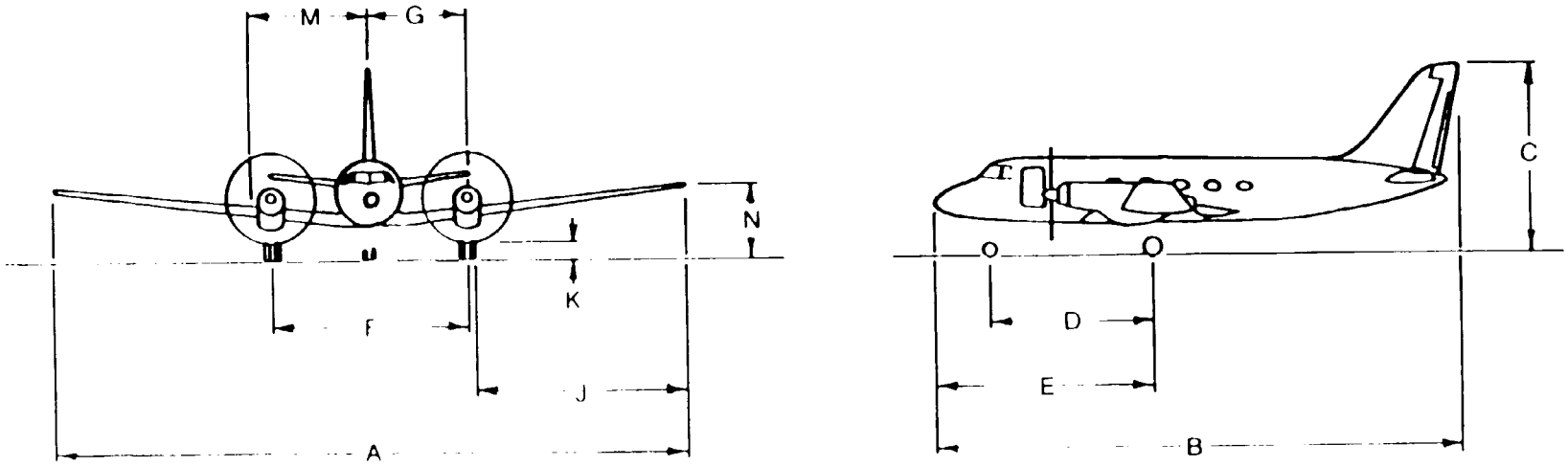

Figure C-72. Grumman Gulfstream I

MAXIMUM TIRE PRESSURE, PSI		A	B	C	D	E	F	G	J	K	M	N
MAIN GEAR	NOSE GEAR											
†	†	93.3	74.6	28.7	22.4	32.3	25.0	12.5	32.7	0.9	12.5	12.5

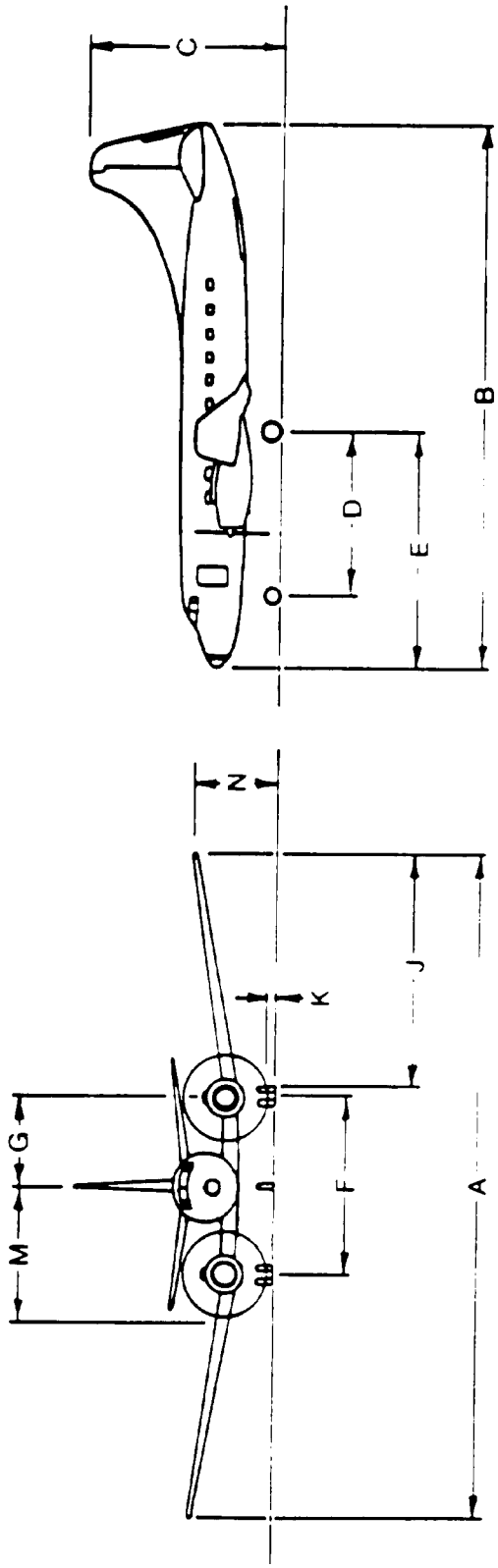

Figure C-73. Martin 404

MAXIMUM TIRE PRESSURE, PSI		A	B	C	D	E	F	G	J	K	M	N
MAIN GEAR	NOSE GEAR											
54	43	71.8	63.3	20.3	23.8	29.8	10.3	9.7	30.4	5.4	5.2	12.5

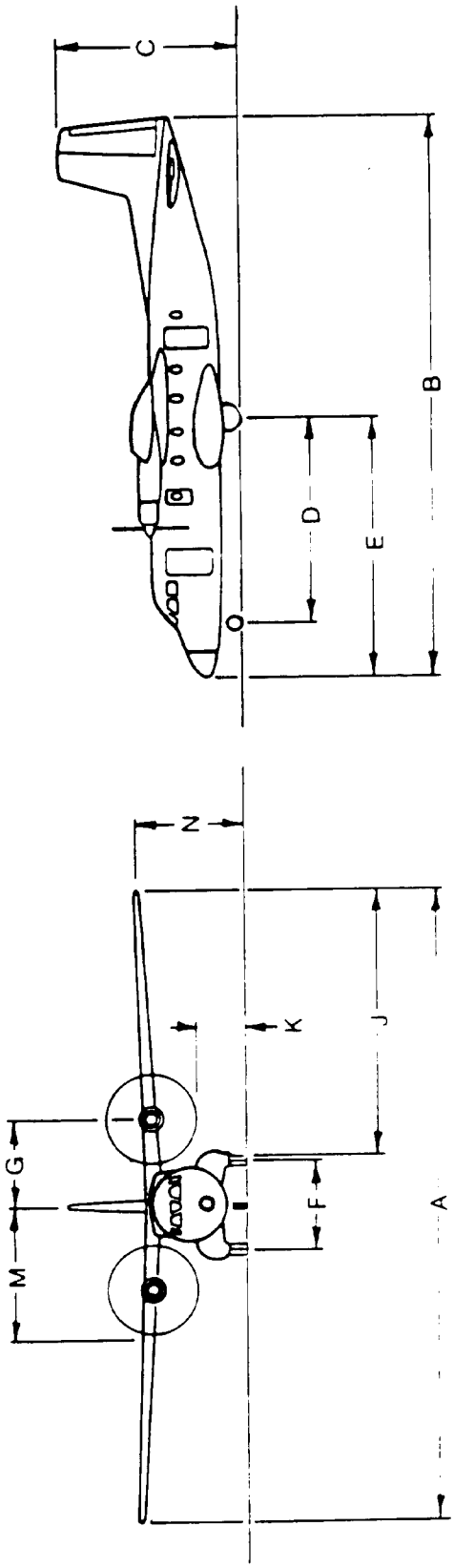

Figure C-74. Aerospatiale Nord 262

MAXIMUM TIRE PRESSURE, PSI		A	B	C	D	E	F	G	H	J	K	L	M	N
MAIN GEAR	NOSE GEAR													
†	†	71.5	48.5	15.6	14.4	†	16.7	†	†	15.0	†	†	†	†

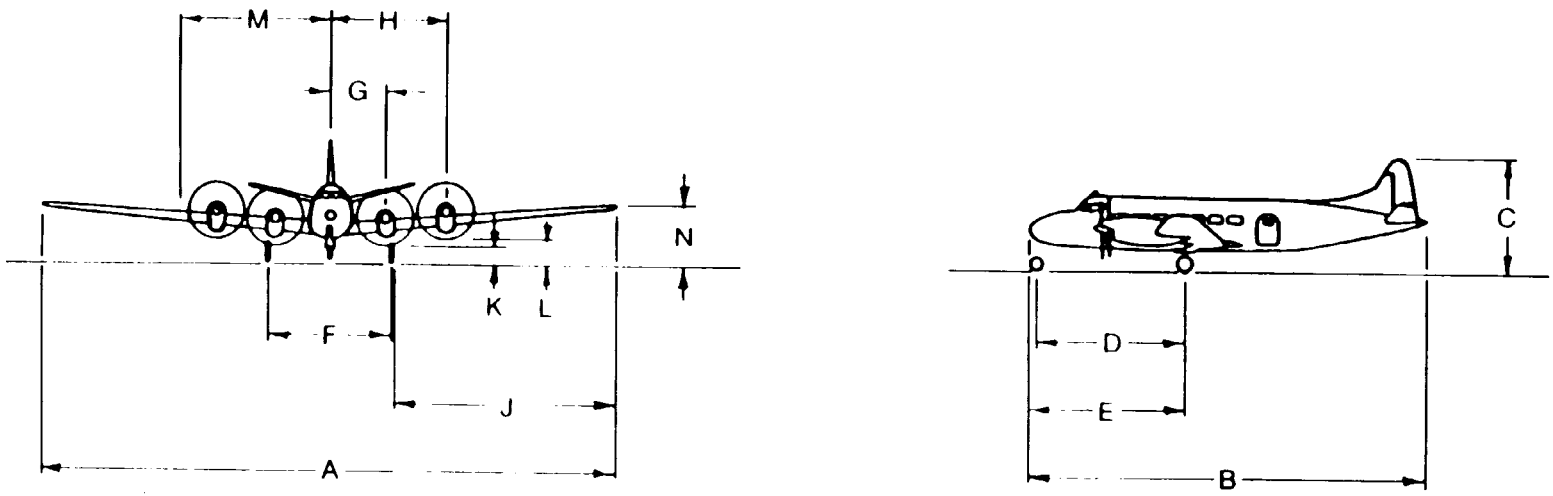

Figure C-75. Hawker Siddeley Heron

MAXIMUM TIRE PRESSURE, PSI		A	B	C	D	E	F	G	J	K	M	N
MAIN GEAR	NOSE GEAR											
73	55	98.5	67.0	24.8	20.7	†	24.8	†	35.9	2.0	†	†

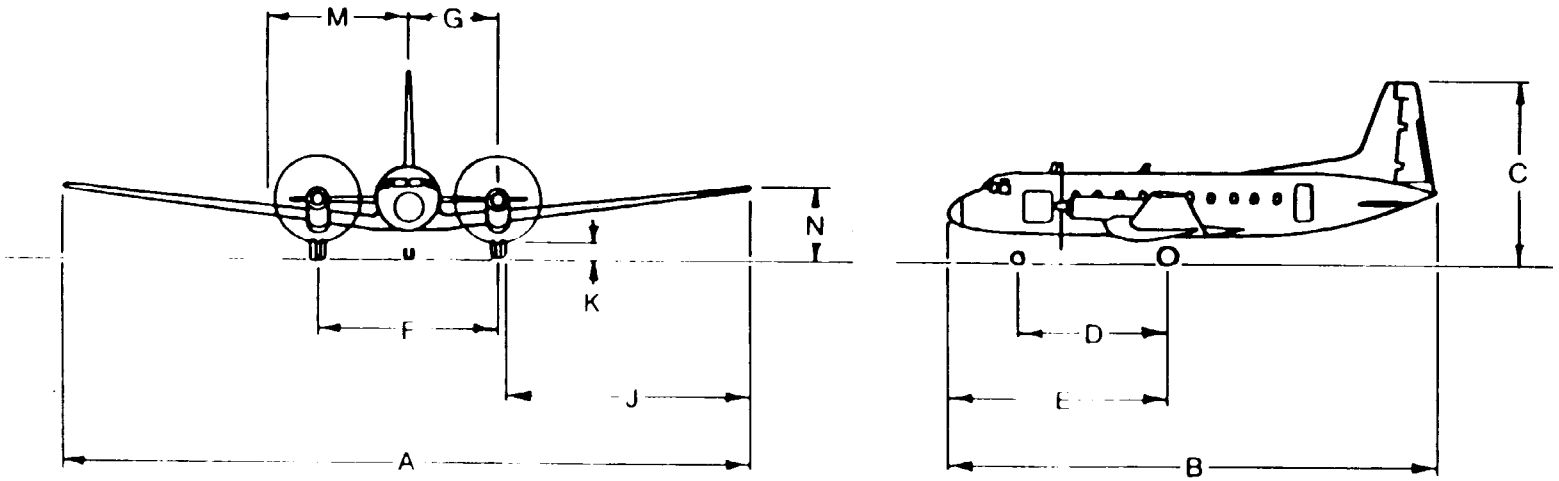

Figure C-76. Hawker Siddeley HS-748

MAXIMUM TIRE PRESSURE, PSI		A	B	C	D	E	F	G	J	K	M	N
MAIN GEAR	NOSE GEAR											
75	50	105.0	86.3	29.5	31.3	†	28.3	†	37.7	†	†	†

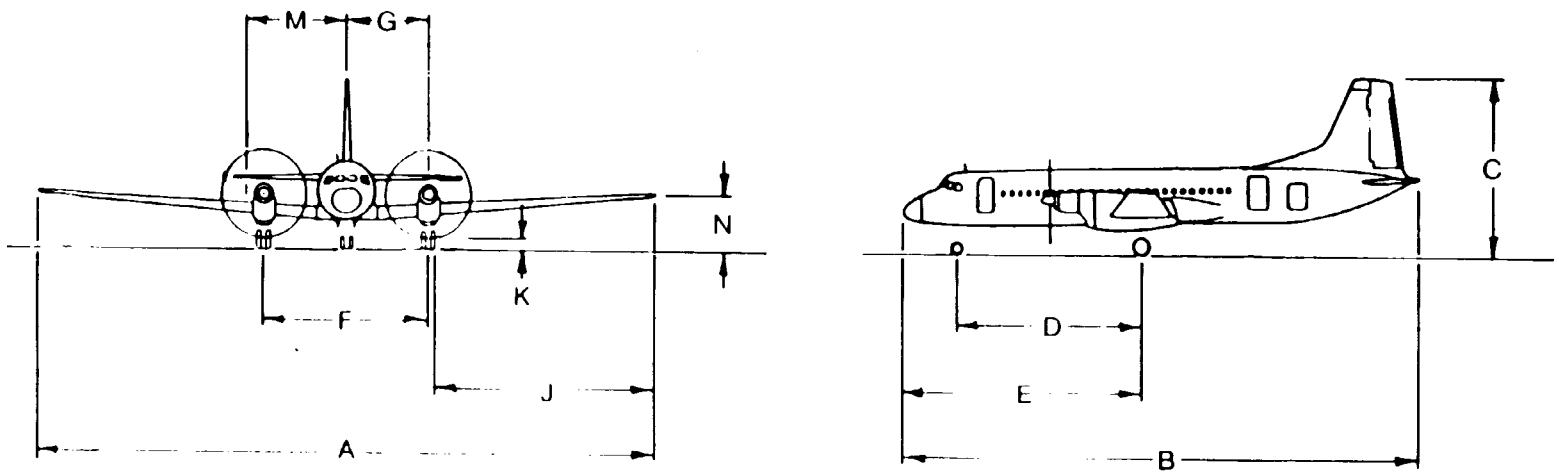

Figure C-77. Nihon/N.A.M.C. YS-11A

MODEL	MAXIMUM TIRE PRESSURE, PSI		A	B	C	D	E	F	G	H	J	K	L	M	N
	MAIN GEAR	NOSE GEAR													
DC-4	75	60	117.5	93.9	27.9	27.4	36.0	24.7	12.3	26.3	44.6	2.2	3.8	13.8	13.5
DC-6	106	70	117.5	105.6	29.3	36.2	44.8	24.7	12.3	26.3	44.6	1.9	3.5	13.9	13.5
DC-7	126	70	127.5	112.3	31.7	39.5	48.1	34.7	17.3	31.3	44.6	1.3	3.8	17.3	13.5

MODEL DC-4 HAS ROUNDED VERTICAL STABILIZER AND CIRCULAR CABIN WINDOWS

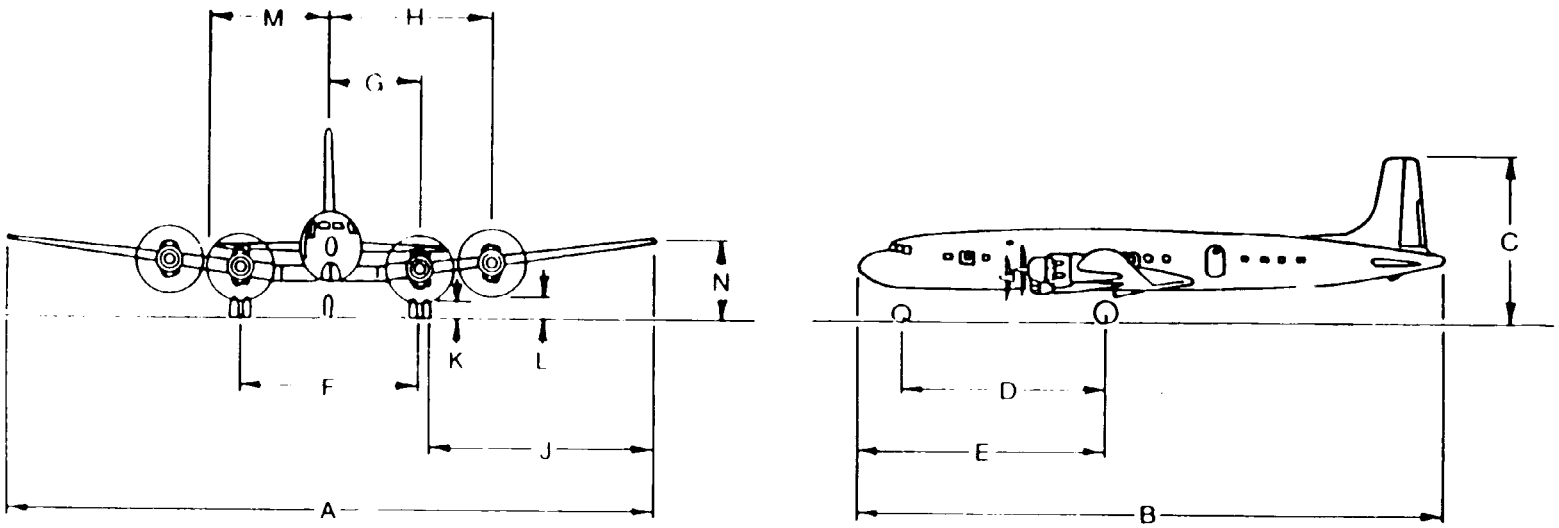

Figure C-78. Douglas DC-4/6/7

MAXIMUM TIRE PRESSURE, PSI		A	B	C	D	E	F	G	H	J	K	L	M	N
MAIN GEAR	NOSE GEAR													
138	†	99.0	104.6	33.7	37.0	48.3	31.2	15.6	29.8	37.8	1.3	2.5	15.6	10.9

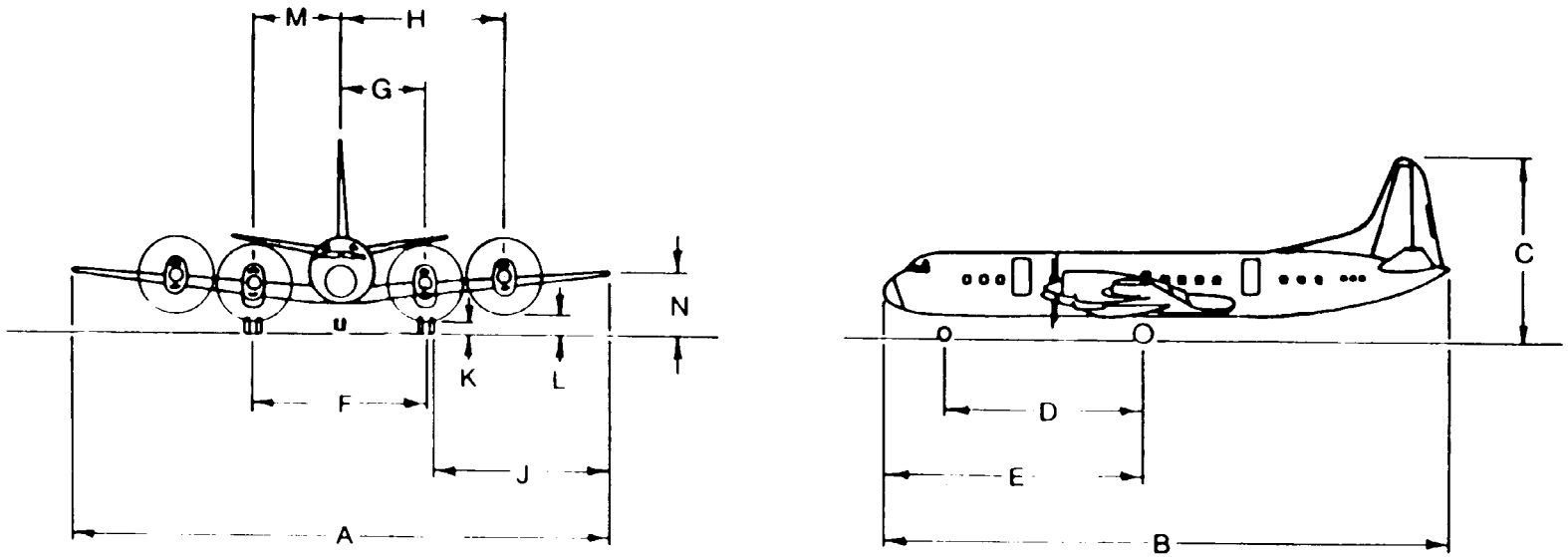

Figure C-79. Lockheed L-188 Electra II

MODEL	MAXIMUM TIRE PRESSURE, PSI		A	B	C	D	E	F	G	H	J	K	L	M	N
	MAIN GEAR	NOSE GEAR													
L-100-20	107	60	132.6	106.1	39.3	37.1	48.6	14.3	16.8	33.3	57.4	5.9	6.9	12.0	15.3
L-100-30	107	60	132.6	112.8	39.2	40.4	51.9	14.3	16.8	33.3	57.4	5.9	6.9	14.0	15.3

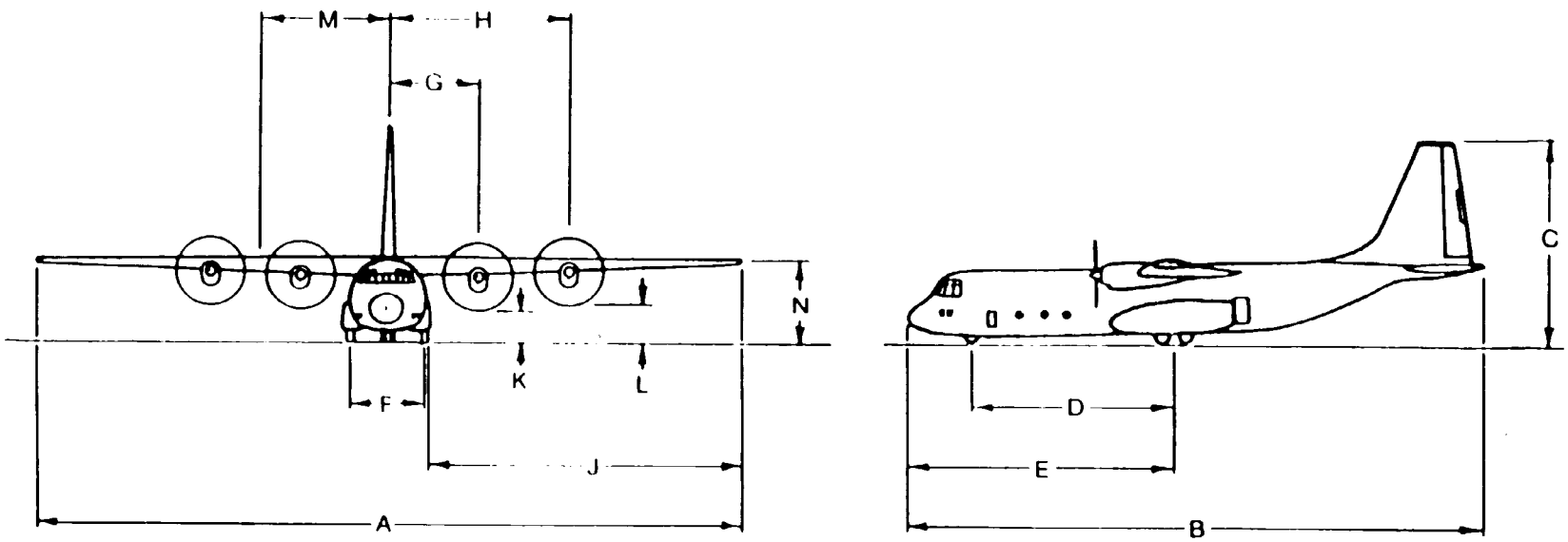

Figure C-80. Lockheed L-382 Hercules

MODEL	MAXIMUM TIRE PRESSURE, PSI		A	B	C	D	E	F	G	H	J	K	L	M	N
	MAIN GEAR	NOSE GEAR													
749A	†	†	123.0	95.2	22.4	33.0	39.3	28.0	14.0	29.8	45.4	1.8	3.9	31.1	15.9
1049	†	†	123.0	113.6	24.9	43.6	49.9	28.0	14.0	29.8	45.4	1.8	3.9	26.0	16.3
1649A	†	†	150.0	116.2	23.4	45.6	54.3	38.4	19.2	37.3	53.8	1.4	3.6	28.3	16.9

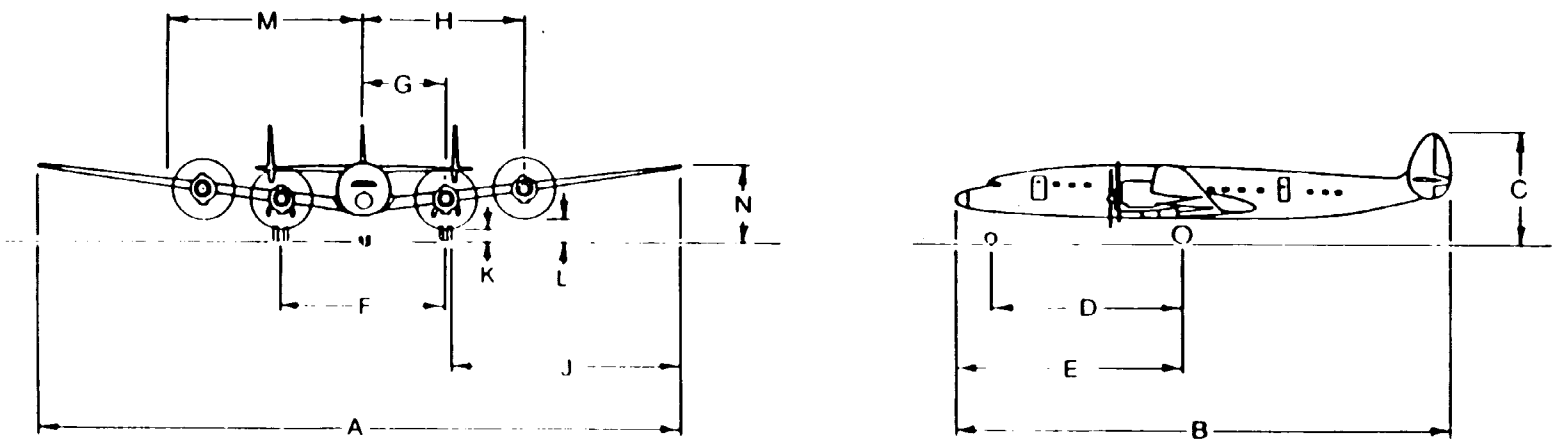

Figure C-81. Lockheed Constellation and Super Constellation

MODEL	MAXIMUM TIRE PRESSURE, PSI		A	B	C	D	E	F	G	H	J	K	L	M	N
	MAIN GEAR	NOSE GEAR													
745	†	†	93.8	81.8	26.8	25.3	35.7	23.8	12.8	23.1	33.8	1.1	1.8	20.8	8.6
810	131	90	93.8	85.7	26.8	29.1	39.5	23.8	12.8	23.1	33.8	1.1	1.8	24.4	8.6

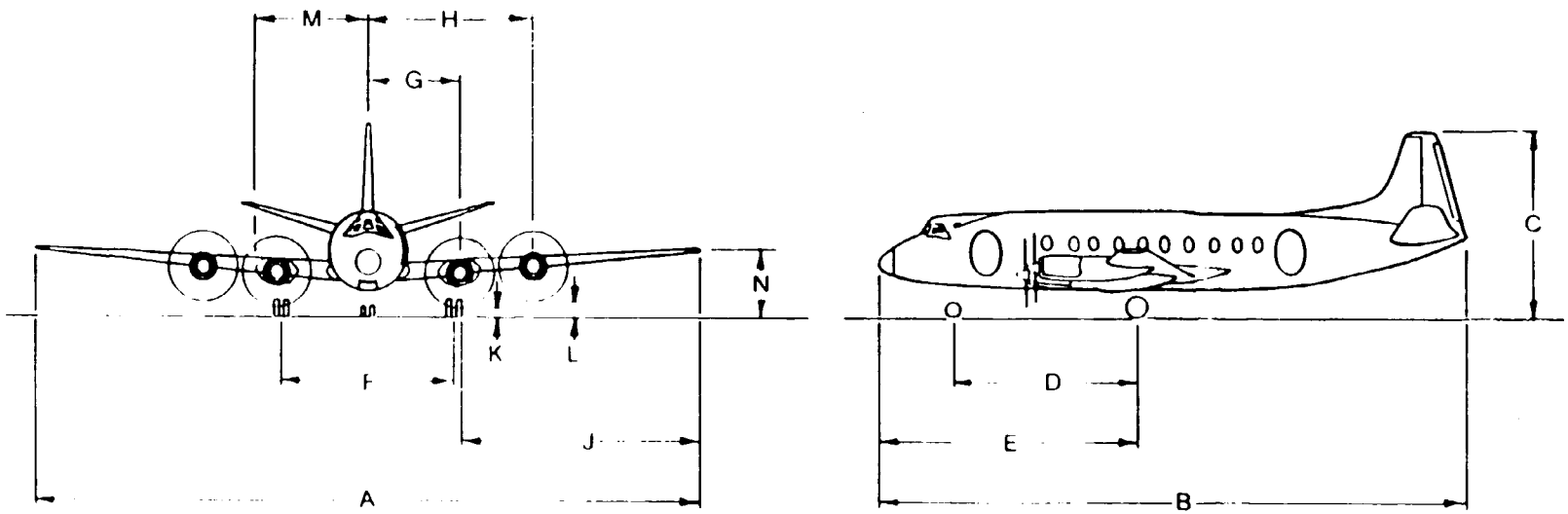

Figure C-82. B.A.C./Vickers Viscount

MAXIMUM TIRE PRESSURE, PSI		A	B	C	D	E	F	G	J	K	M	N
MAIN GEAR	NOSE GEAR											
100	120	43.8	44.1	14.3	15.2	†	12.6	†	14.9	†	†	†

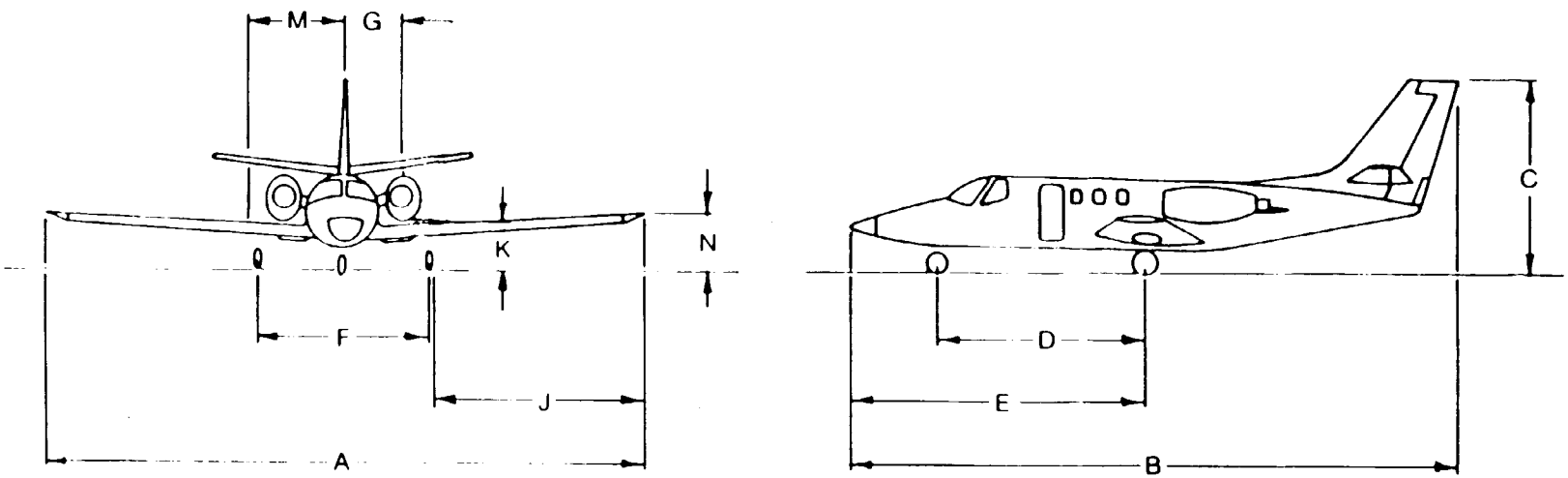

Figure C-83. Cessna Citation

MODEL	MAXIMUM TIRE PRESSURE, PSI		A	B	C	D	E	F	G	J	K	M	N
	MAIN GEAR	NOSE GEAR											
24	115	105	35.6	43.3	12.6	16.2	21.8	8.3	3.7	12.8	4.8	16.0	3.3
25	115	105	35.6	47.6	12.6	16.2	26.0	8.3	3.7	13.1	4.8	16.0	3.3
35,36	160	160	38.1	48.7	12.3	17.3	27.1	8.3	3.7	14.3	4.8	†	3.5

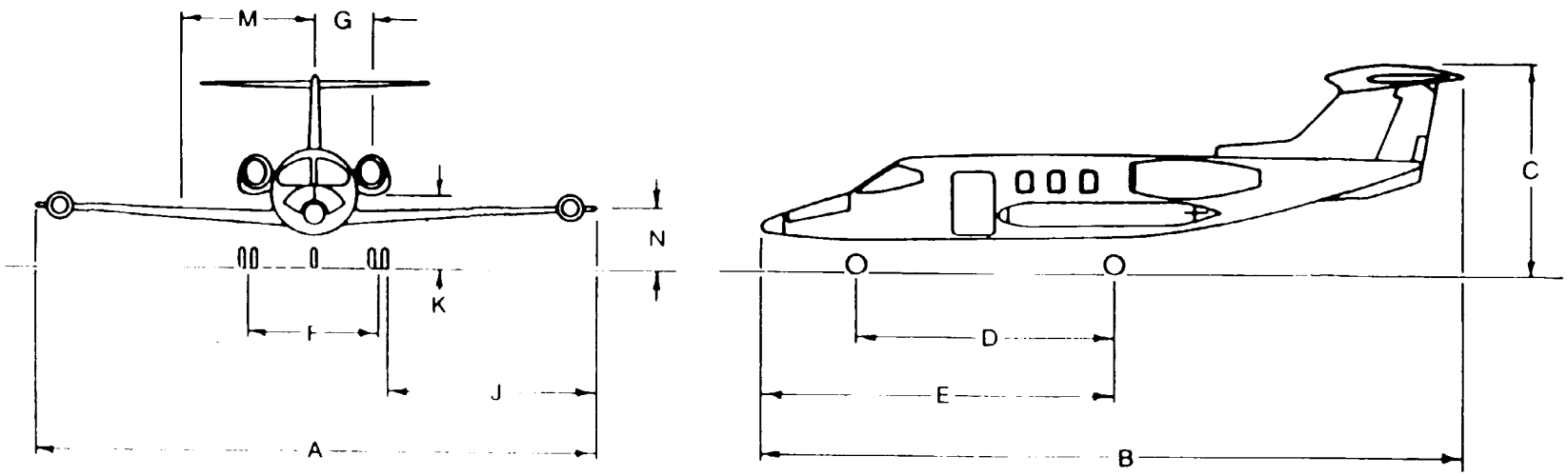

Figure C-84. Gates Learjet

MAXIMUM TIRE PRESSURE, PSI		A	B	C	D	E	F	G	J	K	M	N
MAIN GEAR	NOSE GEAR											
150	95	68.8	79.9	24.5	33.3	40.4	13.7	6.3	26.7	8.8	6.8	6.0

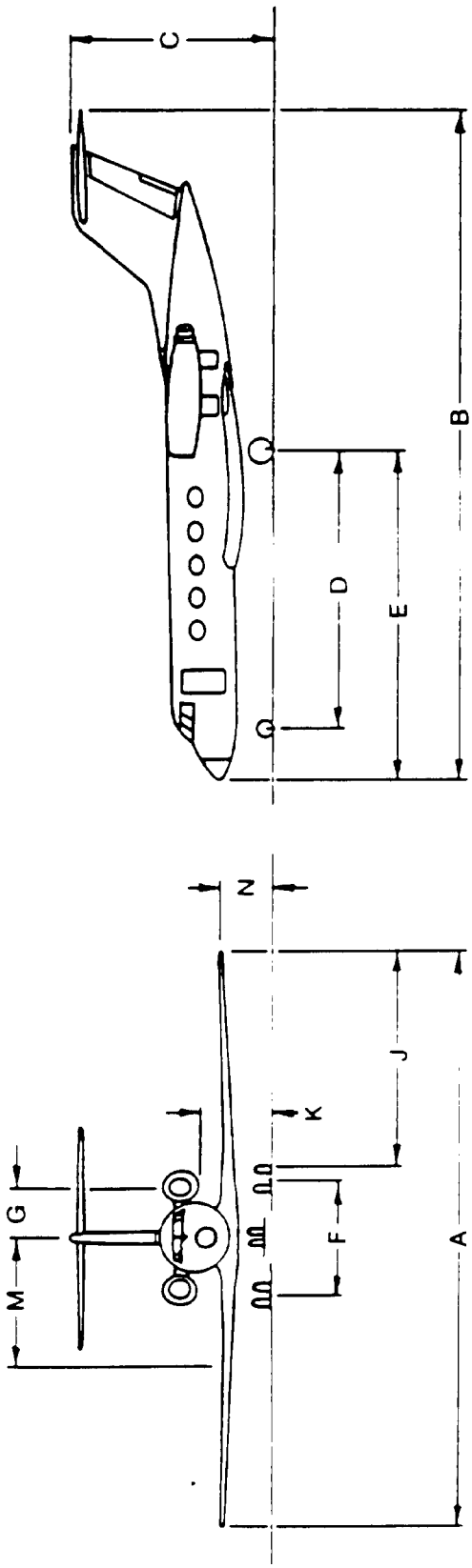

Figure C-85. Grumman Gulfstream II

MAXIMUM TIRE PRESSURE, PSI		A	B	C	D	E	F	G	H	J	K	L	M	N
MAIN GEAR	NOSE GEAR													
220	220	54.4	60.4	20.4	20.6	34.9	12.3	5.6	7.9	19.3	5.2	5.2	7.2	4.4

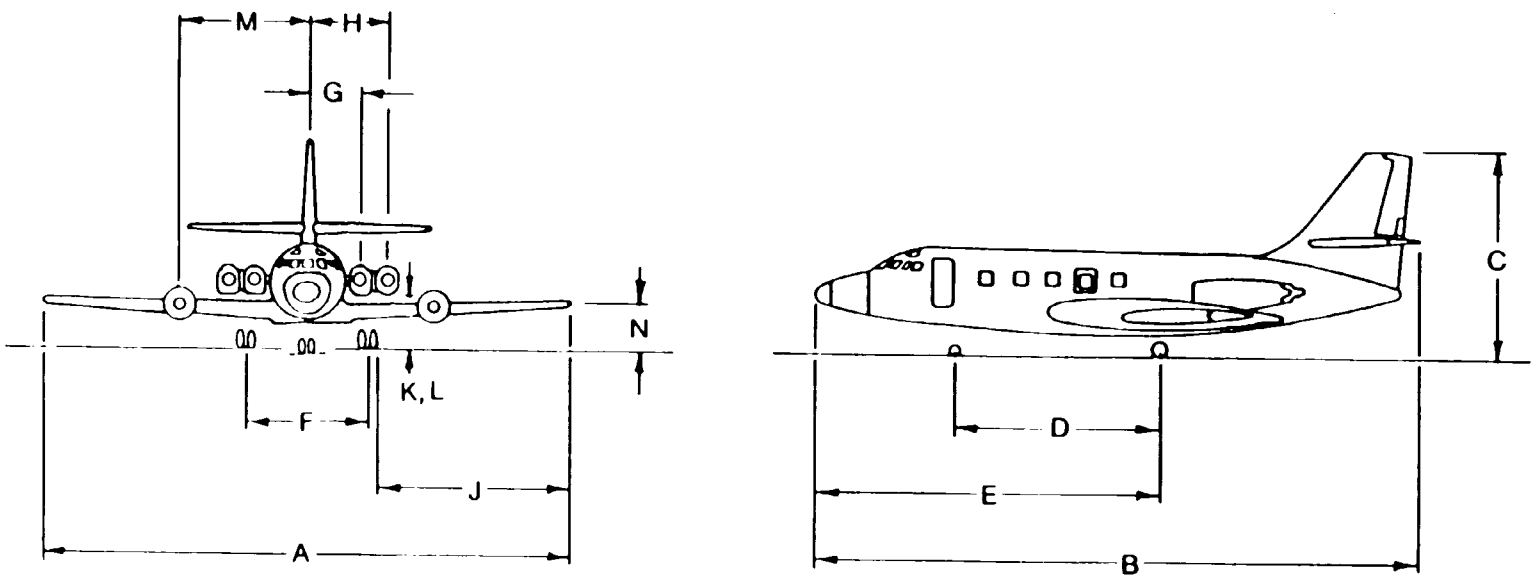

Figure C-86. Lockheed 1329 Jetstar

MODEL	MAXIMUM TIRE PRESSURE, PSI		A	B	C	D	E	F	G	J	K	M	N
	MAIN GEAR	NOSE GEAR											
40	180	100	44.4	43.8	16.0	14.5	22.8	7.3	4.5	18.3	3.8	17.7	3.7
60	185	75	44.4	48.3	16.0	15.9	24.1	7.3	4.5	18.3	3.8	†	3.7
75A	180	100	44.5	47.2	17.3	15.8	†	8.3	4.5	†	3.5	†	3.6

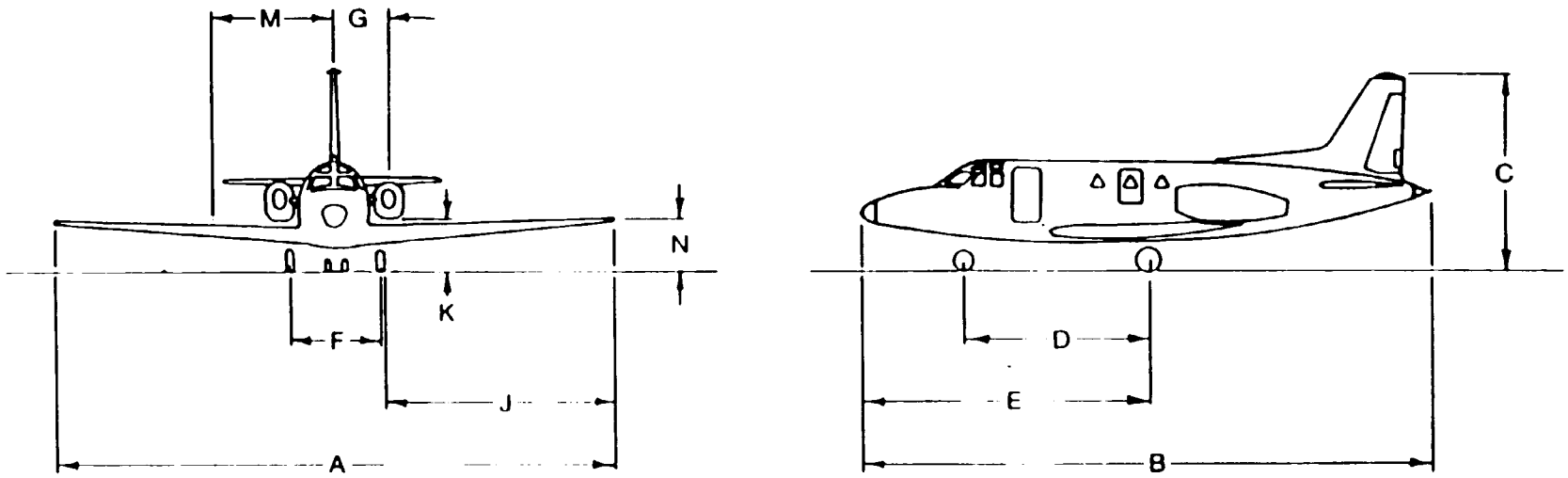

Figure C-87. Rockwell International NA-265 Sabreliner

MAXIMUM TIRE PRESSURE, PSI		A	B	C	D	E	F	G	J	K	M	N
MAIN GEAR	NOSE GEAR											
143	151	53.5	56.3	17.4	18.8	29.5	12.2	5.5	18.9	5.7	15.3	4.8

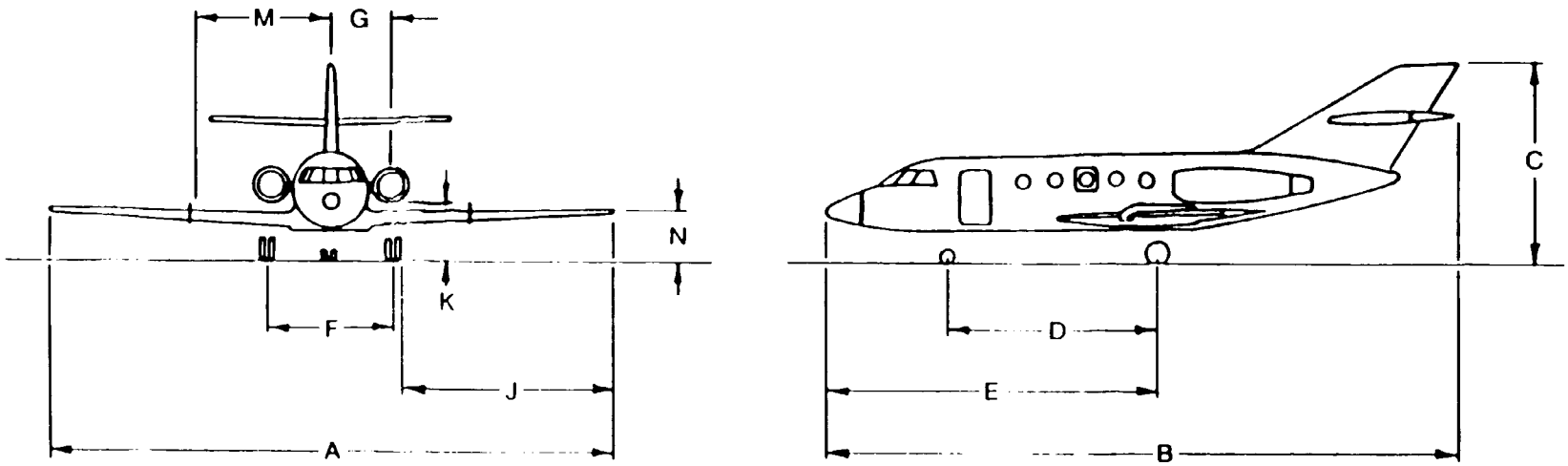

Figure C-88. Avions Marcel Dassault Mystere 20 (Fan Jet Falcon)