MODEL	MAXIMUM TIRE PRESSURE, PSI		A	B	C	D	E	F	G	J	K	M	N
	MAIN GEAR	NOSE GEAR											
D	300	100	38.7	46.1	16.1	15.7	25.7	9.5	0.0	14.6	3.0	4.8	5.8
K	300	100	38.7	48.7	16.3	15.7	25.7	9.5	0.0	14.6	3.0	4.8	5.8

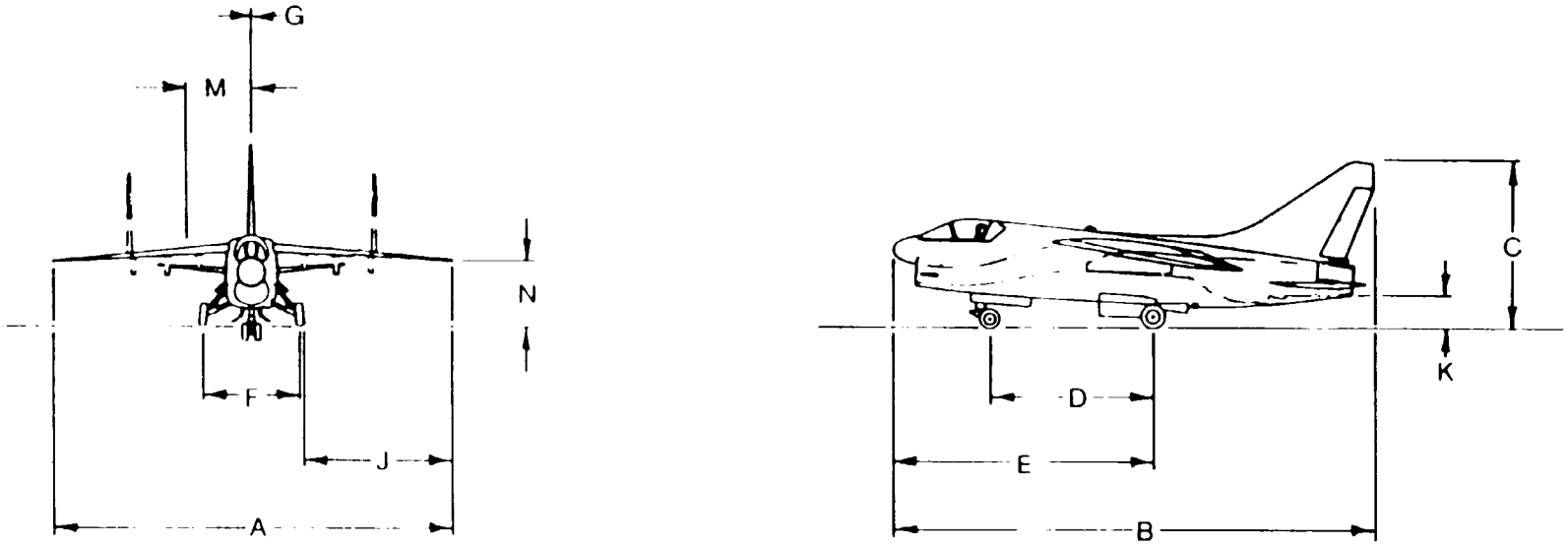

Figure C-39. A-7, Corsair II (LTV)

MAXIMUM TIRE PRESSURE, PSI		A	B	C	D	E	F	G	J	K	M	N
MAIN GEAR	NOSE GEAR											
190	145	57.5	53.3	14.7	17.7	27.4	17.2	†	19.7	†	23.0	9.1

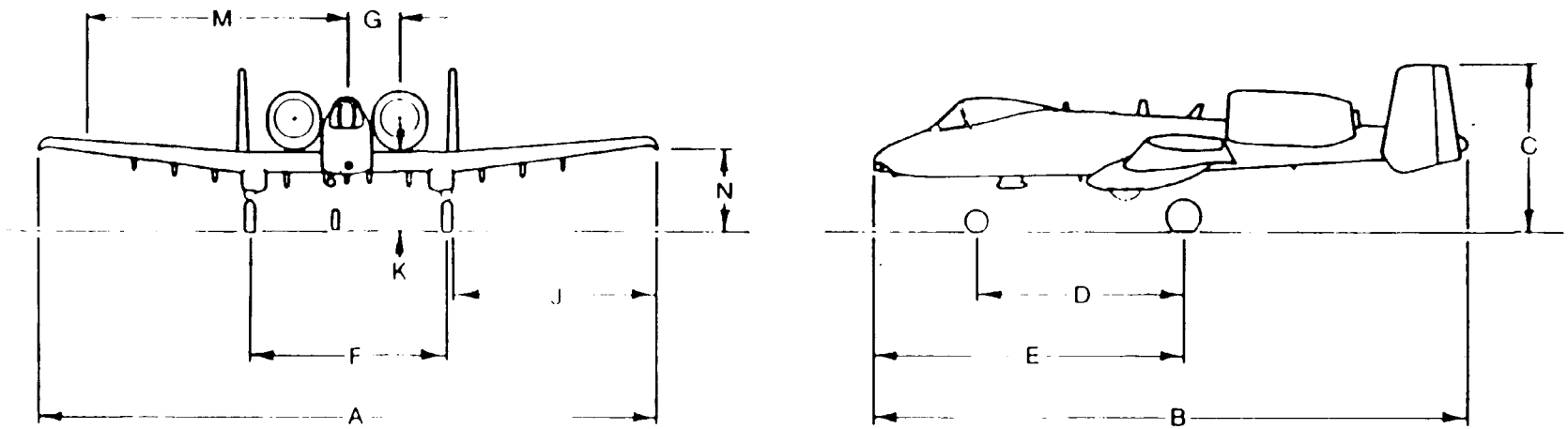

Figure C-40. A-10A, Thunderbolt II (Fairchild)

MAXIMUM TIRE PRESSURE, PSI		A	B	C	D	E	F	G	J	K	M	N
MAIN GEAR	NOSE GEAR											
100	37	38 3	31 8	9 5	7 8	†	13 7	†	12 0	†	†	3 3

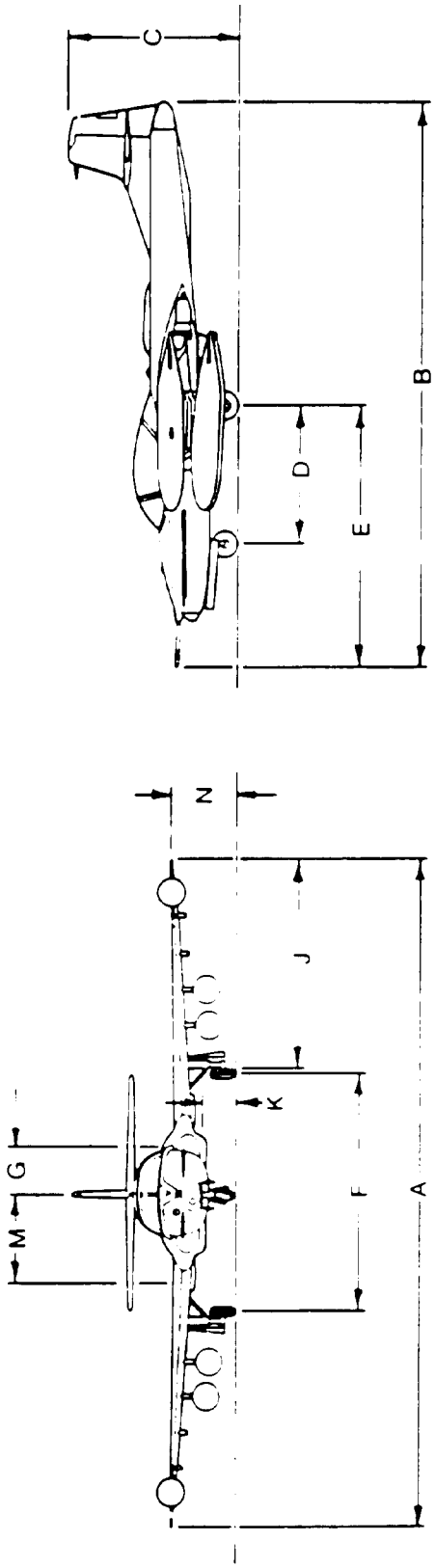

Figure C-41. A-37B, Dragonfly (Cessna)

MODEL	MAXIMUM TIRE PRESSURE, PSI		A	B	C	D	E	F	G	H	J	K	L	M	N
	MAIN GEAR	NOSE GEAR													
A	96	60	132.6	97.8	38.3	31.8	43.6	14.3	16.3	33.3	60.0	5.8	6.4	18.0	15.0
H/U	119	60	132.6	99.5	38.2	31.8	43.6	14.3	16.3	33.3	60.0	6.0	6.7	18.0	15.3

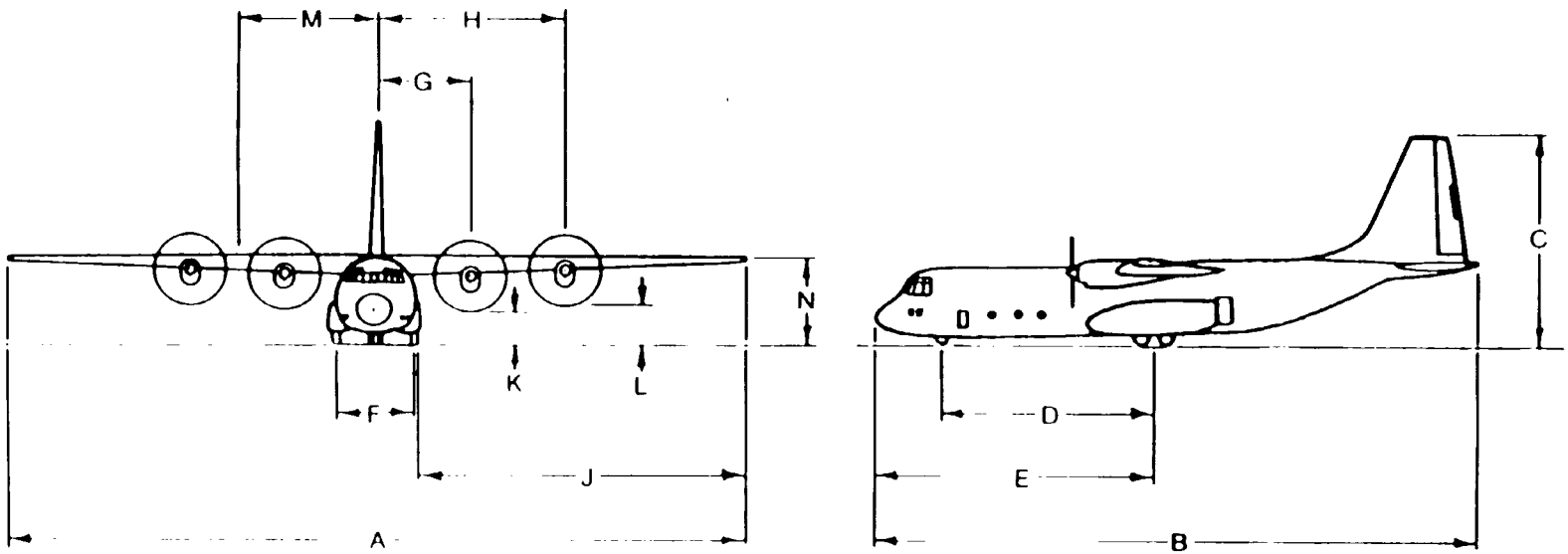

Figure C-42. AC-130, Spectre (Lockheed)

MODEL	MAXIMUM TIRE PRESSURE, PSI		A	B	C	D	E	F	G	J	K	M	N
	MAIN GEAR	NOSE GEAR											
C	265	215	38.6	58.3	16.4	23.3	†	17.9	†	10.0	†	8.9	†
D, E, G	265	215	38.4	63.0	16.4	23.3	†	17.9	†	10.0	†	8.9	†

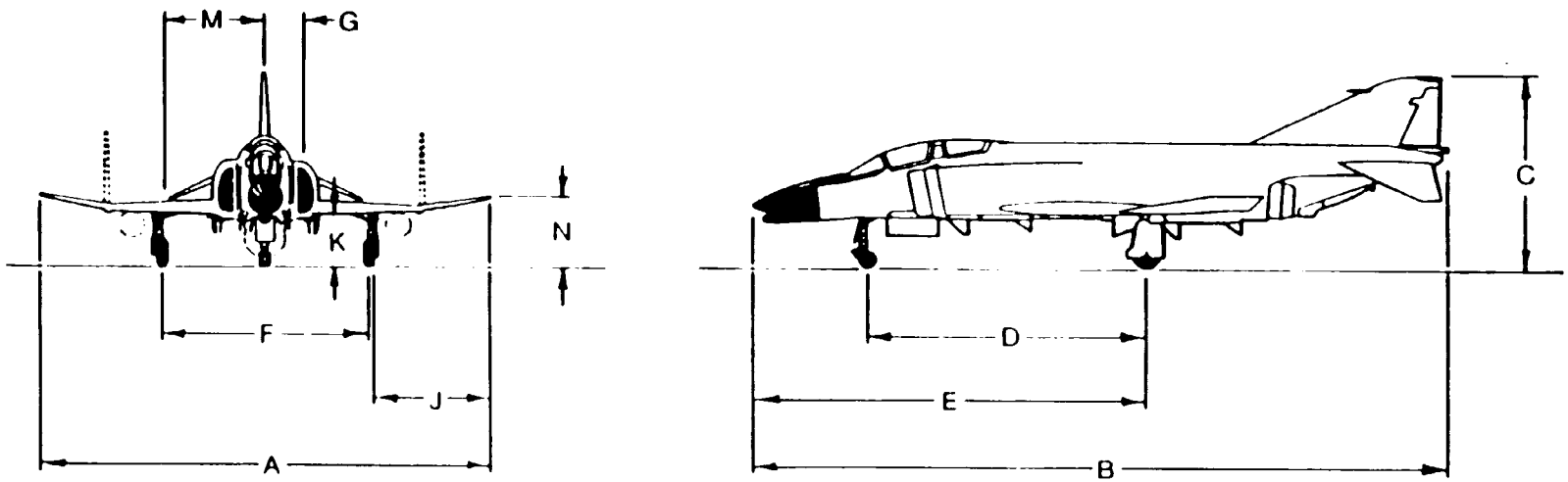

Figure C-43. F-4, Phantom II (McDonnell Douglas)

MODEL	MAXIMUM TIRE PRESSURE, PSI		A	B	C	D	E	F	G	J	K	M	N
	MAIN GEAR	NOSE GEAR											
E	210	75	26.7	48.2	13.4	17.0	†	12.5	†	6.9	†	31.3	†
F	210	75	26.7	51.7	13.2	21.2	†	12.5	†	6.9	†	26.5	†

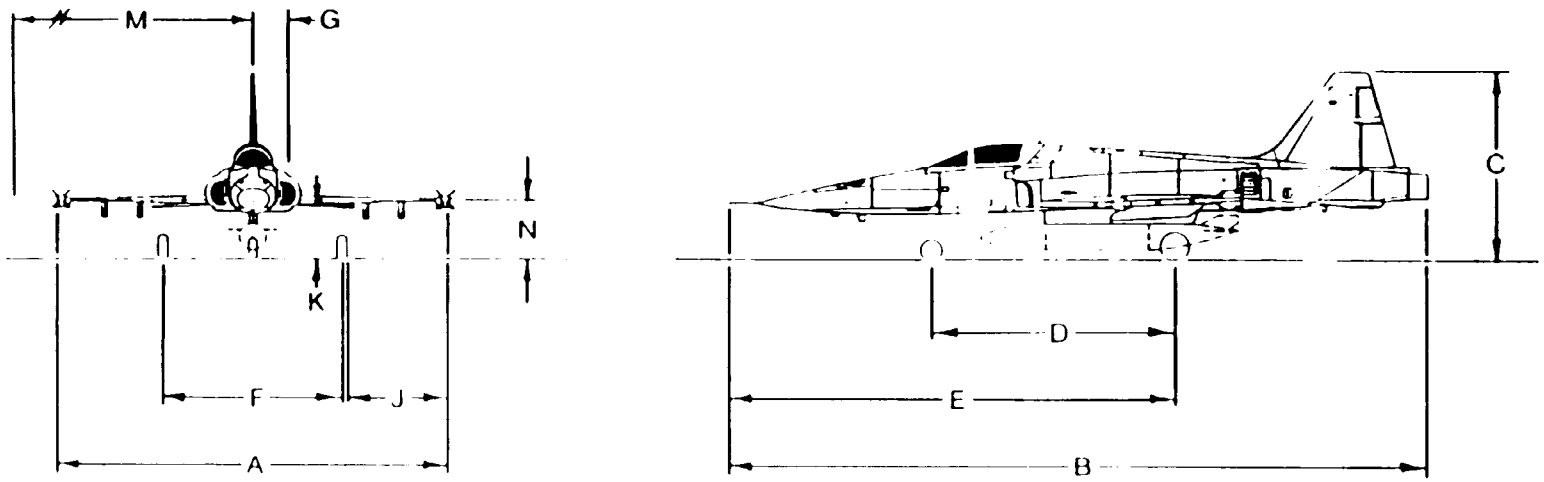

Figure C-44. F-5, Tiger II (Northrop)

MODEL	MAXIMUM TIRE PRESSURE, PSI		A	B	C	D	E	F	G	J	K	M	N
	MAIN GEAR	NOSE GEAR											
A, B	260	190	42.8	63.8	18.8	17.5	†	8.9	†	16.6	†	25.0	7.7
C, D	355	275	42.8	63.8	18.8	17.8	†	9.0	†	16.6	†	25.0	7.7
E	305	305	42.8	63.8	18.8	17.8	†	9.0	†	16.5	†	25.0	8.0

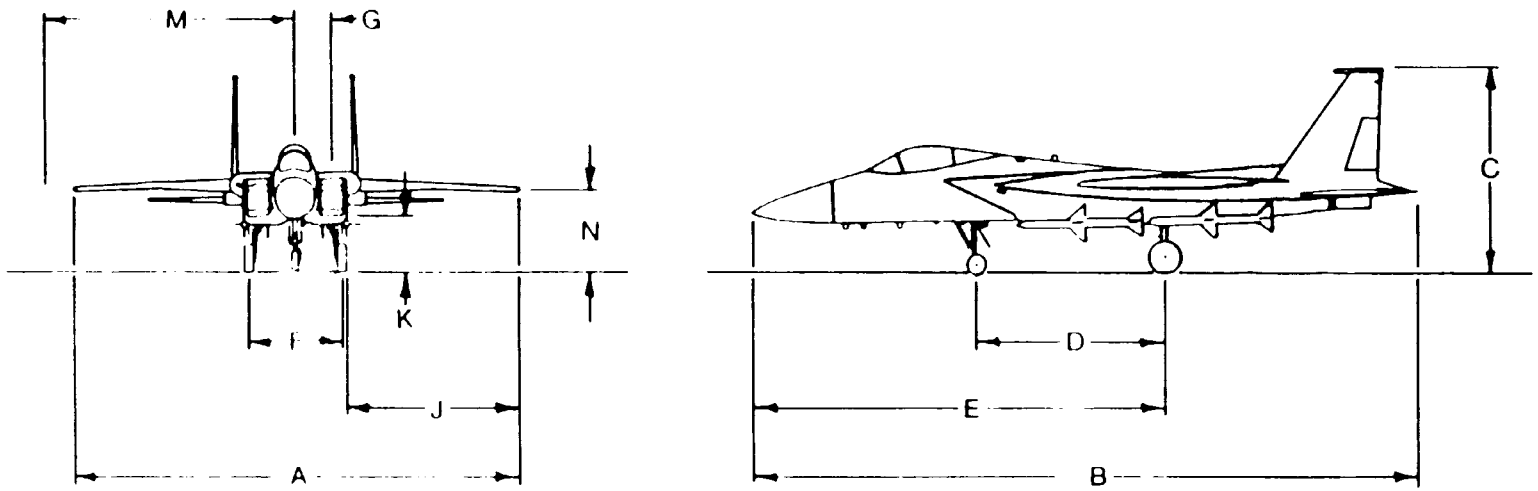

Figure C-45. F-15, Eagle (McDonnell Douglas)

MODEL	MAXIMUM TIRE PRESSURE, PSI		A	B	C	D	E	F	G	J	K	M	N
	MAIN GEAR	NOSE GEAR											
A, B	320	310	32.8	49.5	16.5	13.2	30.8	7.8	0.0	12.5	3.0	18.0	5.0
C, D	320	310	32.8	49.5	16.7	13.2	30.8	7.8	0.0	12.5	3.0	18.0	5.0

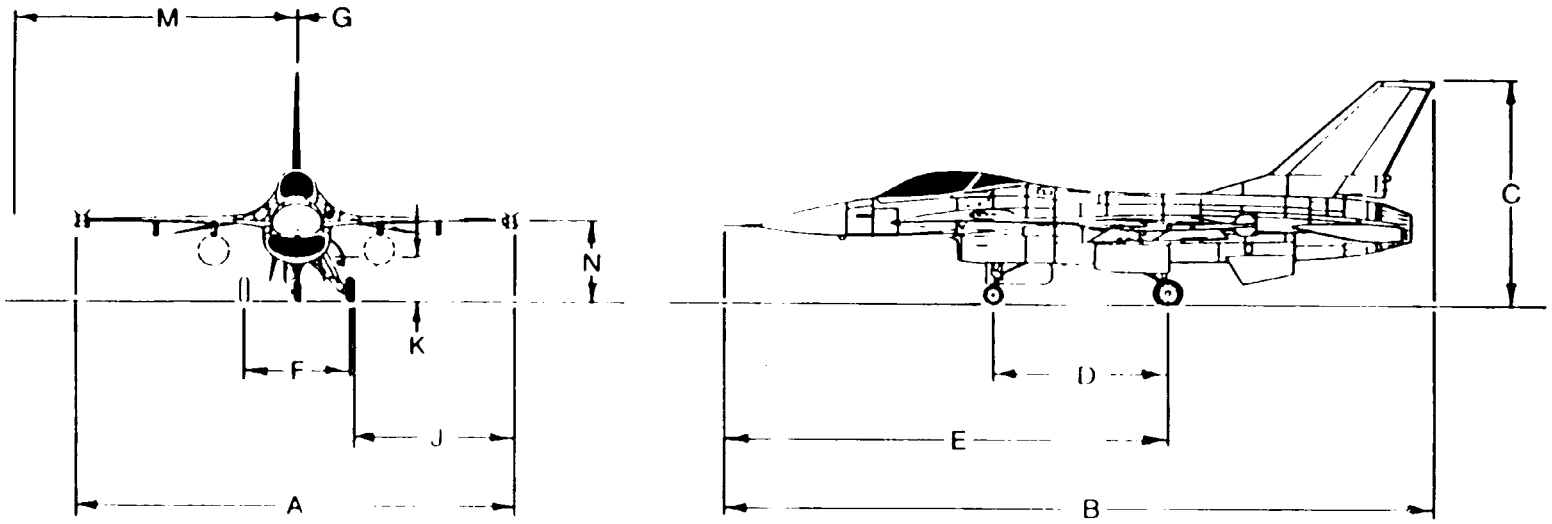

Figure C-46. F-16, Fighting Falcon (General Dynamics)

MAXIMUM TIRE PRESSURE, PSI		A	B	C	D	E	F	G	J	K	M	N
MAIN GEAR	NOSE GEAR											
300	185	38.8	57.6	16.2	14.7	27.9	12.7	0.0	12.8	†	21.1	†

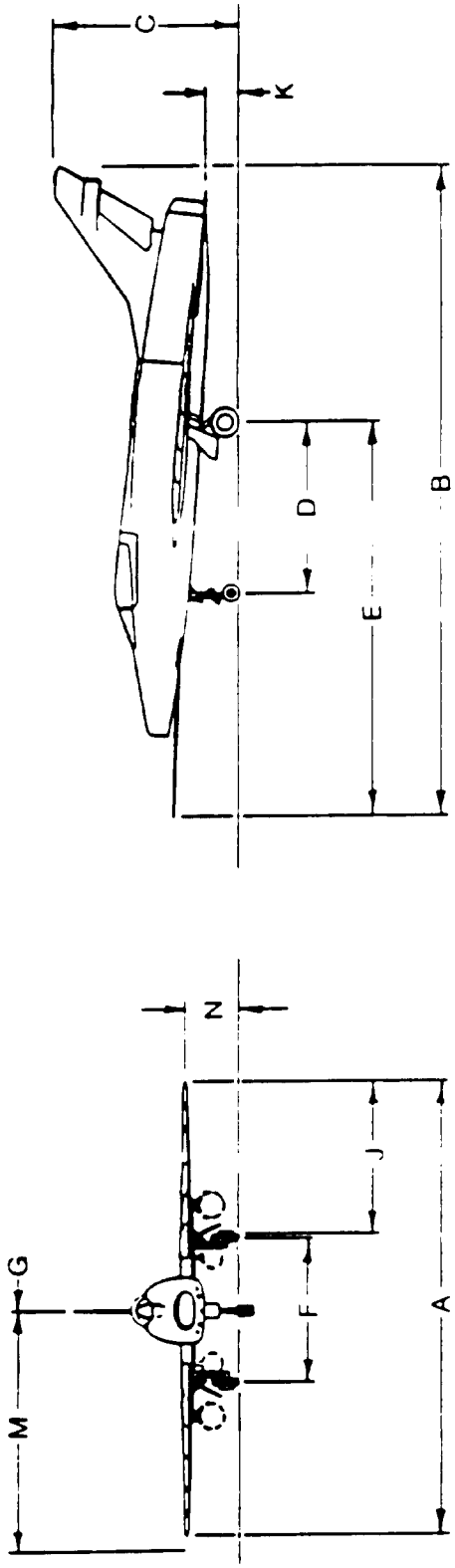

Figure C-47. F-100, Super Sabre (North American)

MAXIMUM TIRE PRESSURE, PSI		A	B	C	D	E	F	G	J	K	M	N
MAIN GEAR	NOSE GEAR											
298	215	39 7	66 9	17 3	21 4	†	19 9	†	9 6	†	25.3	†

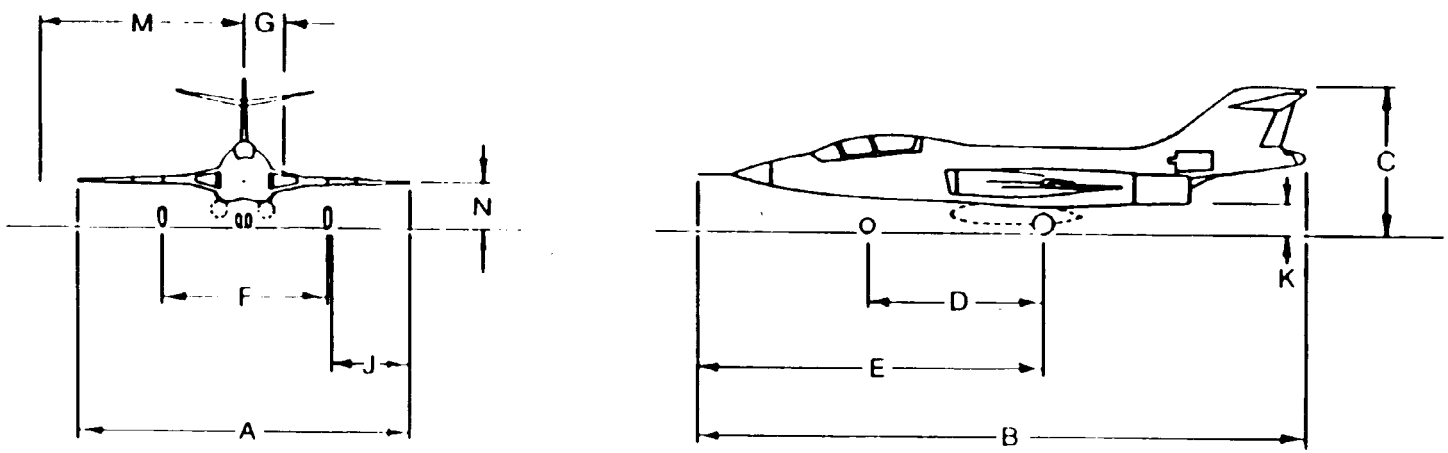

Figure C-48. F-101B, Voodoo (McDonnell Douglas)

MAXIMUM TIRE PRESSURE, PSI		A	B	C	D	E	F	G	J	K	M	N
MAIN GEAR	NOSE GEAR											
208	225	21.9	54.8	13.5	15.1	†	8.8	0.0	6.3	†	32.3	†

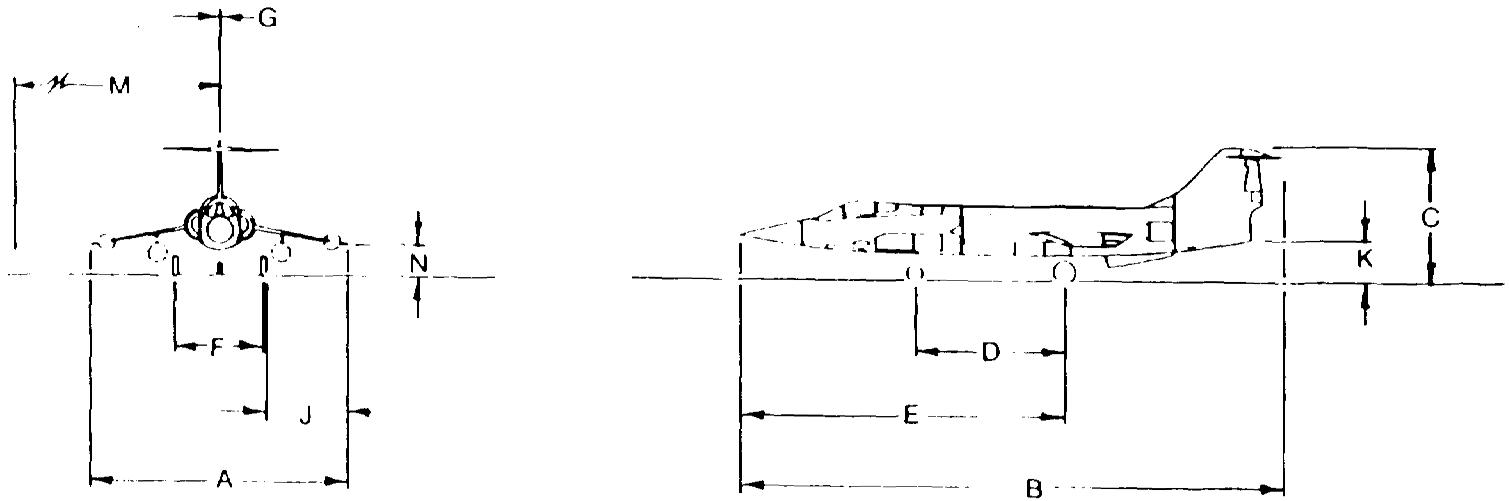

Figure C-49. F-104G, Starfighter (Lockheed)

MODEL	MAXIMUM TIRE PRESSURE, PSI		A	B	C	D	E	F	G	J	K	M	N
	MAIN GEAR	NOSE GEAR											
D	210	145	34.9	67.5	19.7	21.1	†	17.3	0.0	8.5	†	25.2	†
F, G	210	145	34.9	69.9	20.5	23.8	†	17.3	0.0	8.5	†	27.6	†

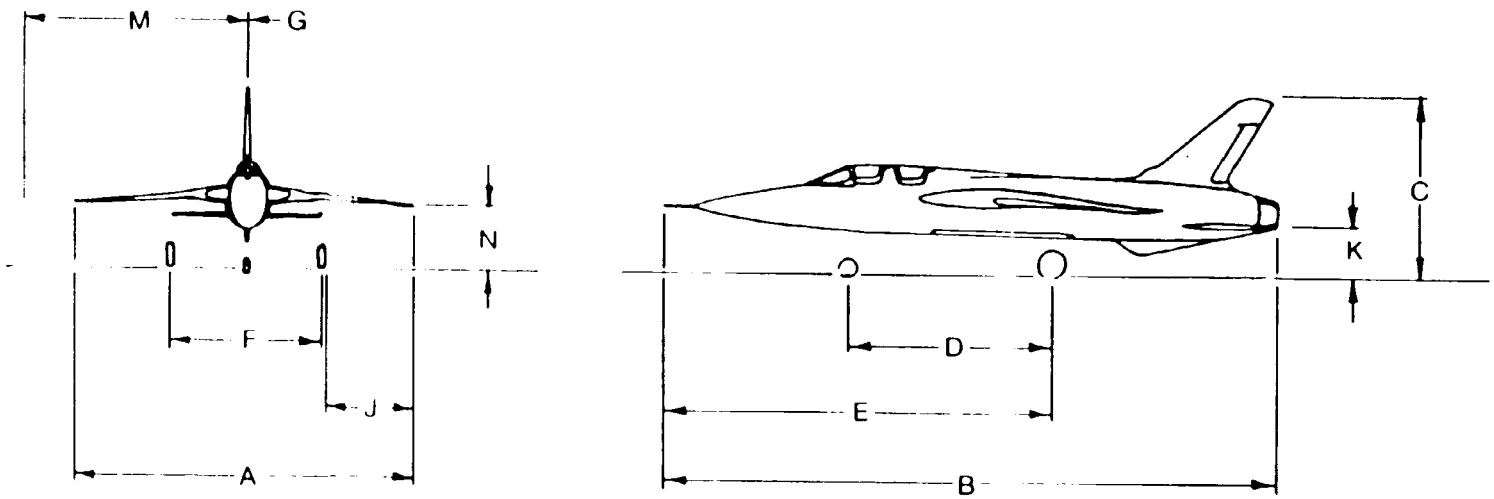

Figure C-50. F-105, Thunderchief (Fairchild)

MAXIMUM TIRE PRESSURE, PSI		A	B	C	D	E	F	G	J	K	M	N
MAIN GEAR	NOSE GEAR											
300	150	38.3	70.8	20.3	24.2	46.2	15.3	0.0	11.2	1	7.6	4.5

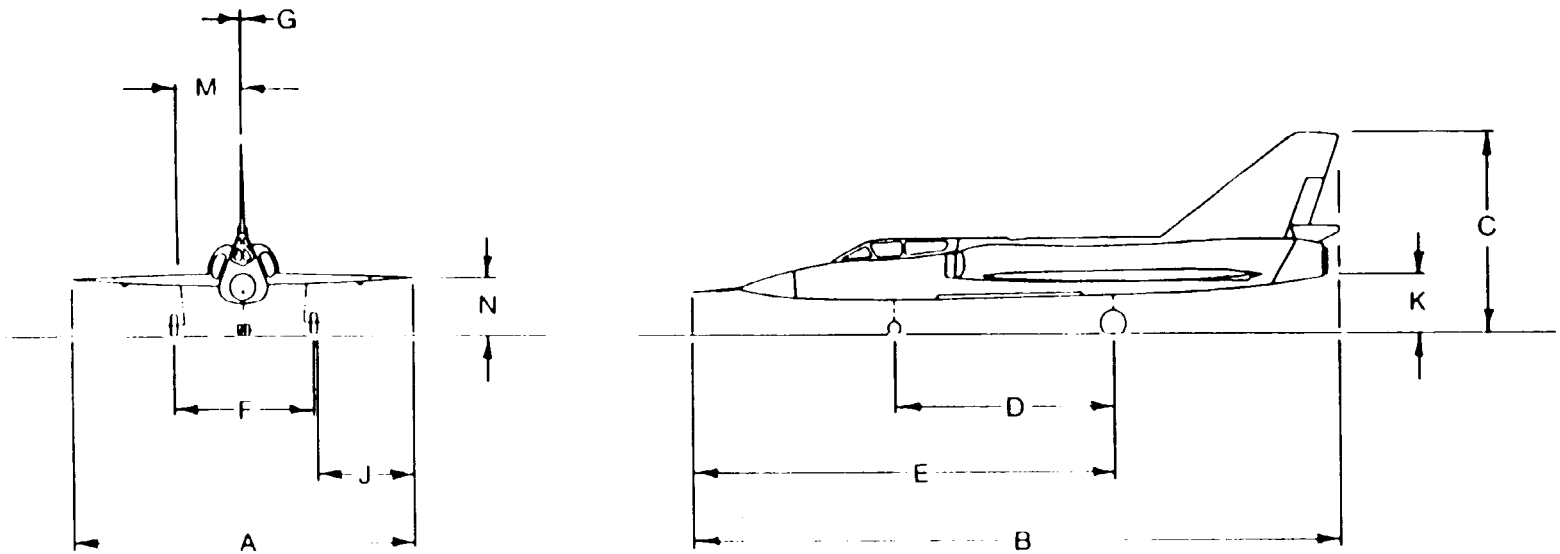

Figure C-51. F-106A/B, Delta Dart (General Dynamics/Convair)

MAXIMUM TIRE PRESSURE, PSI		A	B	C	D	E	F	G	J	K	M	N
MAIN GEAR	NOSE GEAR											
180	280	63.0	75.5	17.1	24.0	48.2	10.0	†	25.9	†	28.7	8.3

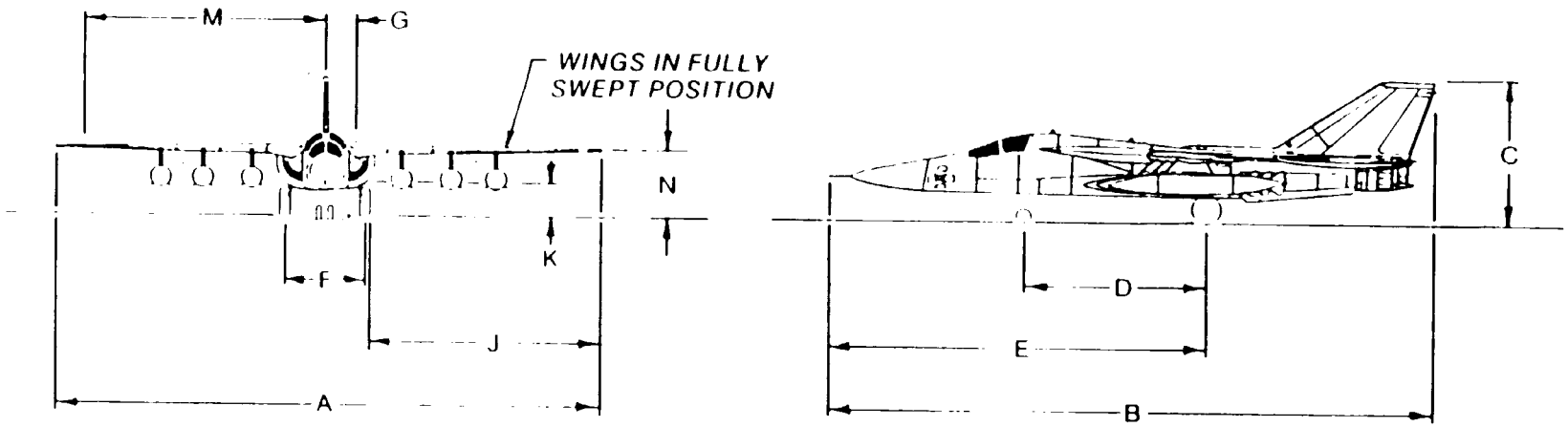

Figure C-52. F-111A/D/E/F (General Dynamics)

MANUFACTURER	MODEL	NAME	MAXIMUM TIRE PRESSURE, PSI		A	B	C	D	F
			MAIN GEAR	TAIL GEAR					
BELLANCA	7	Citabria	24	†	33.4	22.7	6.7	16.1	6.3
CESSNA	120/140		†	†	32.8	21.0	6.3	†	6.4
	170		†	†	36.0	25.0	6.6	†	†
	180/185	Skywagon	35	45	36.2	25.8	7.8	†	7.7
	190/195*		†	†	36.2	27.1	7.2	†	†
HELIO AIRCRAFT	H-250/H-295	Helio Courier	28	40	39.0	31.5	8.8	23.4	9.0
	HST 550	Helio Stallion	22	55	41.0	39.6	9.3	24.7	9.7
PIPER	PA-12/14/15	Super Cruiser	†	†	35.5	22.5	6.8	†	6.3
	PA-18	Super Cub	18	†	35.3	22.4	6.7	†	6.1
	PA-20	Pacer	†	†	29.3	20.4	6.3	†	†
SILVAIRE	8	----	†	†	35.0	20.0	6.3	†	6.3
TAYLORCRAFT	F-21	----	†	†	36.0	22.2	6.5	†	6.0
UNIVAIR AIRCRAFT	108	Stinson	20	25	33.9	25.2	7.5	18.6	7.1

*SERIES 195 HAS LENGTH OF 27.3'

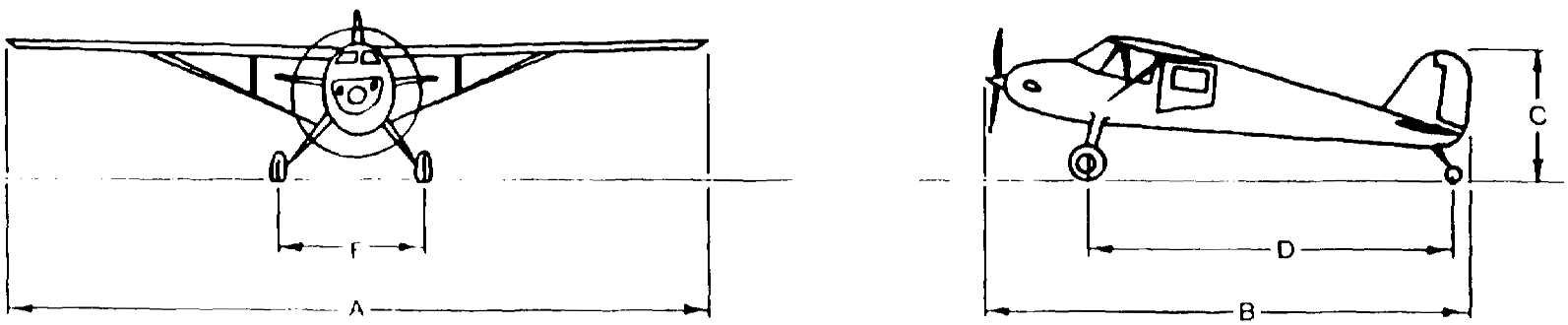

Figure C-53. Single Engine, High Wing, Tailwheel Aircraft

MANUFACTURER	MODEL	NAME	MAXIMUM TIRE PRESSURE, PSI		A	B	C	D	F
			MAIN GEAR	NOSE GEAR					
BEDE AIRCRAFT	BD-4	--	†	†	25.5	21.9	6.3	†	8.3
CESSNA	150	--	30	30	32.8	23.0	8.7	4.8	6.6
	172	Skyhawk	23	26	35.8	26.9	8.8	5.3	7.2
	177	Cardinal	30	30	35.5	27.0	9.1	6.4	8.3
	182	Skylane	32	45	35.8	28.1	8.9	5.6	8.0
	206	Stationair	42	45	35.8	28.0	9.7	6.9	8.2
	207	Super Skywagon	55	49	35.8	31.8	9.6	6.9	10.0
	210	Centurion	42	45	36.8	28.3	9.7	5.8	8.5
PIPER	PA-22	Tri-Pacer	†	†	29.3	20.3	6.3	†	†

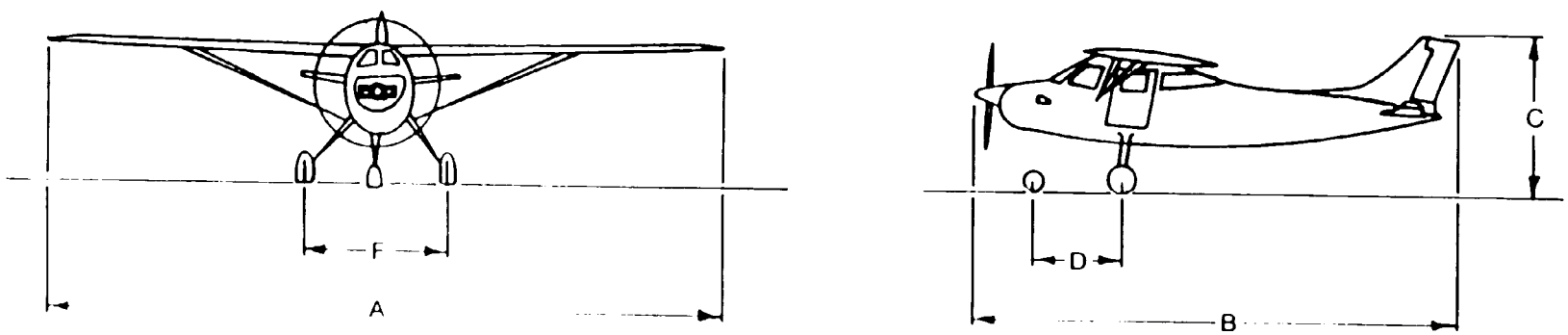

Figure C-54. Single Engine, High Wing, Tricycle Gear Aircraft

MANUFACTURER	MODEL	NAME	MAXIMUM TIRE PRESSURE, PSI		A	B	C	D	F
			MAIN GEAR	NOSE GEAR					
AEROSTAR AVIATION	415	Ercoupe	†	†	30.0	20.6	6.3	5.3	7.8
	M-20*	----	30	30	35.0	23.6	8.3	5.6	9.1
	M-22	Mark 22	45	42	35.0	27.0	9.8	8.3	11.0
BEECHCRAFT	23	Musketeer	40	40	32.8	25.0	8.3	6.3	11.8
	V-35B	Bonanza	40	40	33.5	26.4	6.6	7.0	9.6
	F-33	Bonanza	40	40	32.8	25.5	8.3	7.4	9.6
	F-33A	Debonair	40	40	32.8	25.5	8.3	7.4	9.6
BELLANCA	260/300	Viking	†	†	24.2	23.5	7.3	6.7	9.0
GRUMMAN	AA-1	Yankee	26	22	24.5	19.3	6.8	4.4	8.3
NAVION	G-1	Rangemaster	45	30	34.8	27.5	8.3	5.7	8.8
PIPER	PA-24	Commanche	42	42	36.0	24.8	7.4	6.6	9.7
	PA-28-180	Cherokee	†	†	30.0	23.5	7.3	6.3	10.0
	PA-28-200	Cherokee Arrow	†	†	30.0	24.2	8.0	7.4	10.5
	PA-32	Cherokee Six	†	†	32.8	27.8	7.9	7.8	10.6
ROCKWELL INTERNATIONAL	112	----	29	31	35.0	27.2	10.1	6.9	7.2

*VARIOUS MODELS OF M 20 KNOWN AS CHAPARRAL EXECUTIVE, MUSTANG, RANGER, STATESMAN

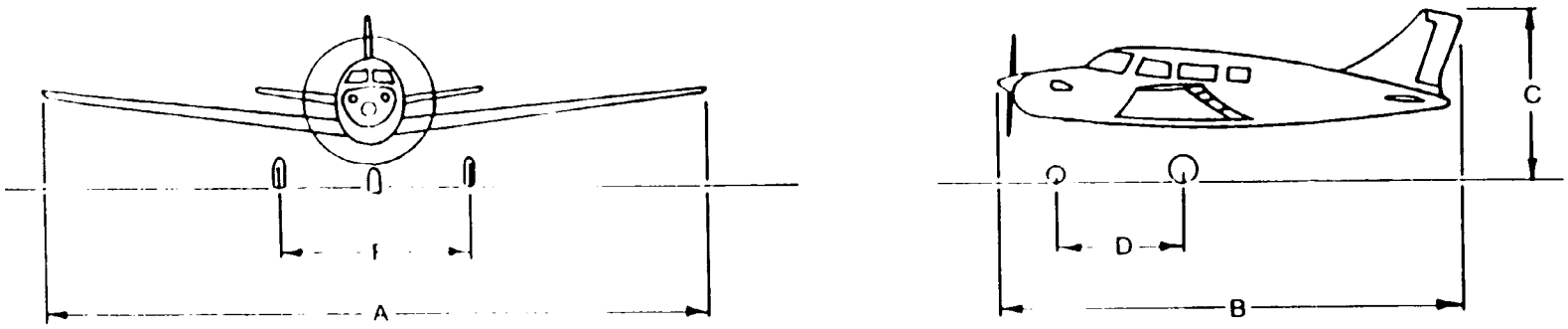

Figure C-55. Single Engine, Low Wing, Tricycle Gear Aircraft

MANUFACTURER	MODEL	NAME	MAXIMUM TIRE PRESSURE, PSI		A	B	C	D	F
			MAIN GEAR	NOSE GEAR					
AEROSTAR AVIATION	600/601	Aerostar	†	†	34.3	34.8	12.2	†	10.3
BEECHCRAFT	B-55	Baron	50	50	37.8	27.0	9.6	7.0	7.0
	E-55	Baron	50	50	37.8	29.0	9.2	8.0	8.0
	A-60	Duke	70	48	39.3	33.8	12.3	9.3	11.0
CESSNA	310	----	60	24	37.5	29.6	9.9	9.5	12.0
	401/402/421	Twin Cessna	70	35	39.8	33.8	11.8	10.5	14.7
PIPER	PA-23-160	Apache	†	†	37.2	27.4	9.5	7.5	11.0
	PA-23-250	Aztec	54	24	37.0	27.6	10.3	7.5	11.3
	PA-30	Twin Commanche	42	42	36.0	25.2	8.3	7.3	9.8
	PA-31	Navajo	60	42	40.7	32.7	13.0	8.7	13.8

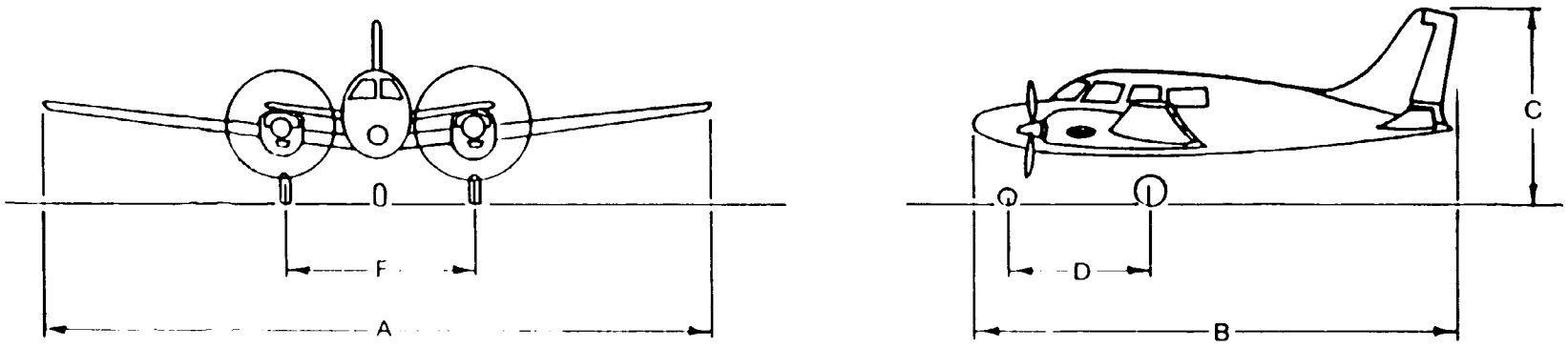

Figure C-56. Twin Engine, Low or Mid Wing, Tricycle Gear Aircraft

MANUFACTURER	MODEL	NAME	MAXIMUM TIRE PRESSURE, PSI		A	B	C	D	F
			MAIN GEAR	NOSE GEAR					
CESSNA	336/ 337	Super Skymaster	45	45	38.2	29.8	9.3	7.8	8.2

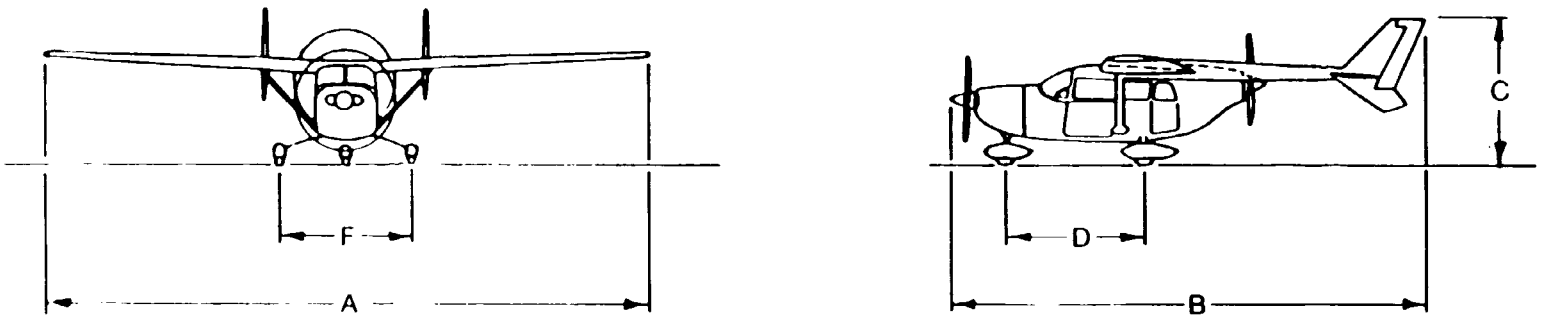

Figure C-57. Twin Engine, High Wing, Tricycle Gear Aircraft, Cessna

MANUFACTURER	MODEL	NAME	MAXIMUM TIRE PRESSURE, PSI		A	B	C	D	F
			MAIN GEAR	NOSE GEAR					
ROCKWELL INTERNATIONAL	500	Aero Commander	50	30	49.5	35.1	14.5	†	12.9
	560/680/ SHRIKE	Grand/Shrike Commander	50	30	49.1	36.6	14.5	14.0	12.9

SERIES 681 (TURBO II, HAWK COMMANDER) HAS WINGSPAN ("A") OF 44.0', OTHER DIMENSIONS SAME AS SERIES 560

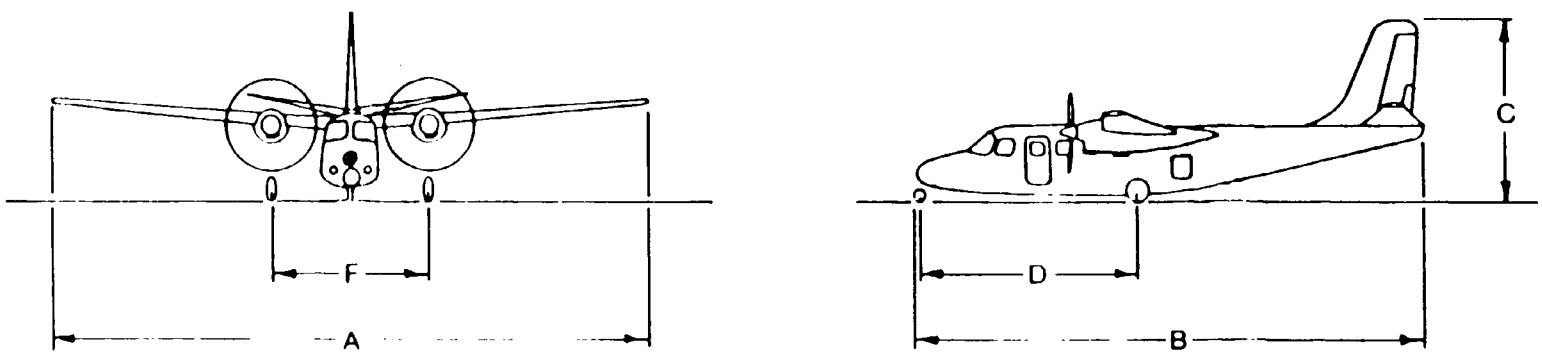

Figure C-58. Twin Engine, High Wing, Tricycle Gear Aircraft, Rockwell

MODEL	MAXIMUM TIRE PRESSURE, PSI		A	B	C	D	F
	MAIN GEAR	TAIL GEAR					
18	62	50	49.7	35.3	9.3	23.8	12.9
Turbo 18	80	*	46.0	37.4	9.6	12.6**	12.9
Volpar Turboliner	80	*	46.0	44.3	9.6	12.6**	12.9

* NOSE GEAR TIRE PRESSURE IS 45 PSI FOR TURBOPROP CONVERSION WITH TRICYCLE LANDING GEAR

** DIMENSION "D" IS FOR TRICYCLE GEAR CONFIGURATION

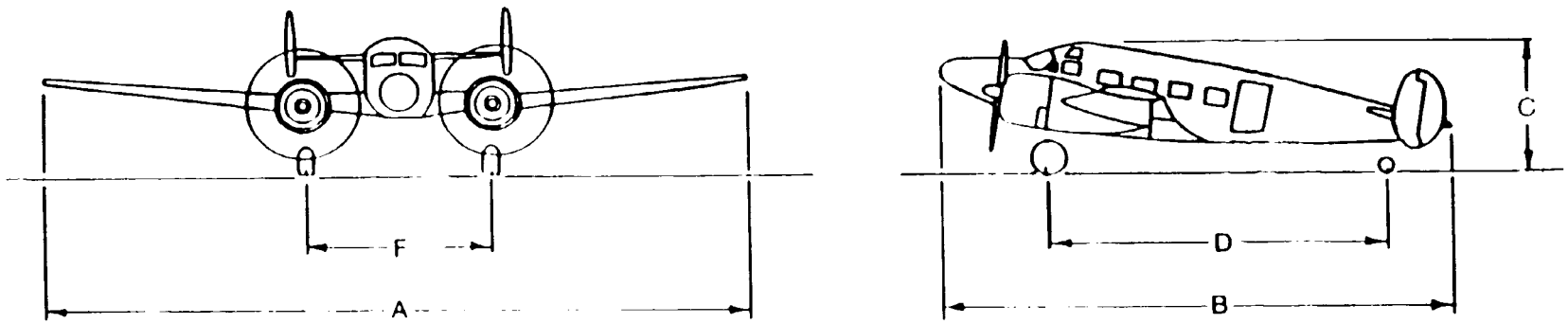

Figure C-59. Beechcraft Model 18 and Conversions

MODEL	MAXIMUM TIRE PRESSURE, PSI		A	B	C	D	F
	MAIN GEAR	NOSE GEAR					
A-65	47	35	45.9	35.5	14.3	12.3	12.8
B-80	48	42	50.3	35.5	14.3	12.3	12.8

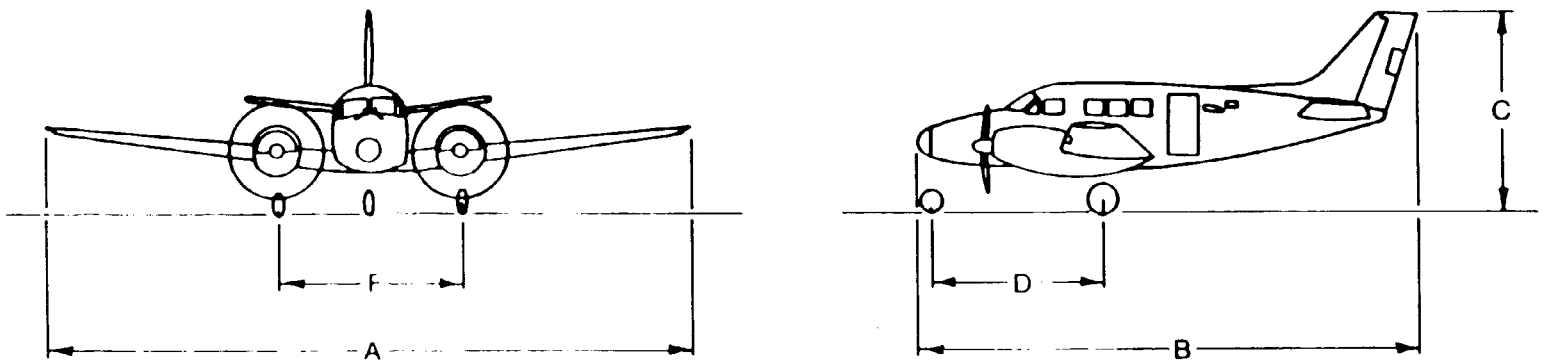

Figure C-60. Beechcraft Queen Air

MODEL	MAXIMUM TIRE PRESSURE, PSI		A	B	C	D	F
	MAIN GEAR	NOSE GEAR					
A-90	55	52	50.3	36.5	14.7	12.3	12.8
A-100	105	105	45.9	39.9	15.3	14.9	13.0

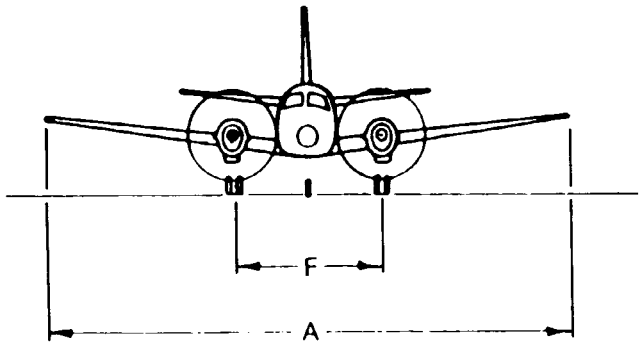

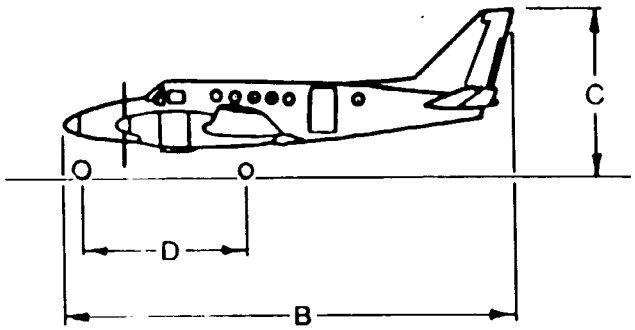

Figure C-61. Beechcraft King Air

MAXIMUM TIRE PRESSURE, PSI		A	B	C	D	F
MAIN GEAR	NOSE GEAR					
87	50	45.9	44.6	14.3	18.0	13.0

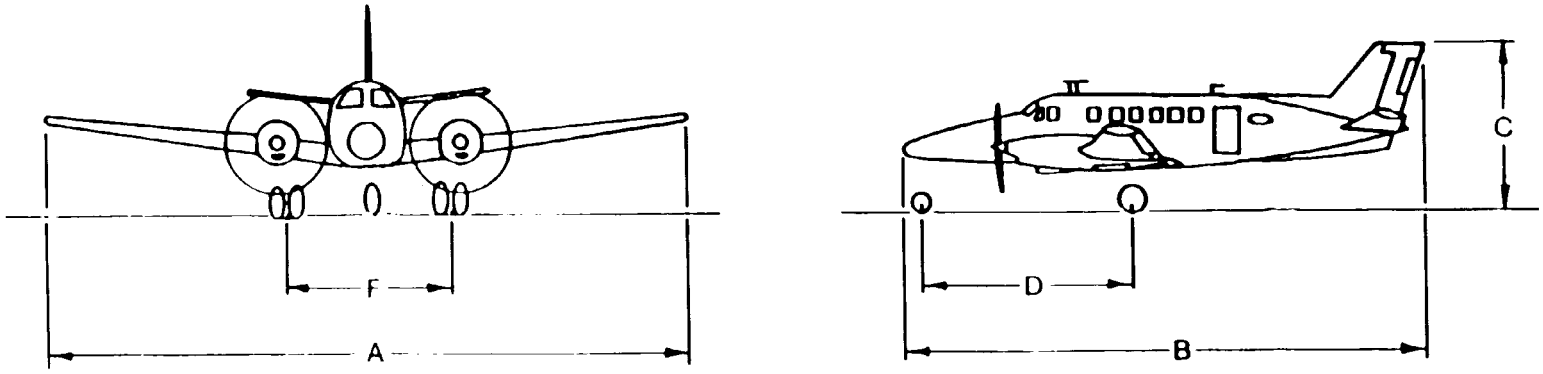

Figure C-62. Beechcraft 99A

MODEL	MAXIMUM TIRE PRESSURE, PSI		A	B	C	D	F
	MAIN GEAR	NOSE GEAR					
IIB	†	†	45.9	40.1	14.3	†	15.0
III	100	85	46.3	42.2	16.7	†	15.0

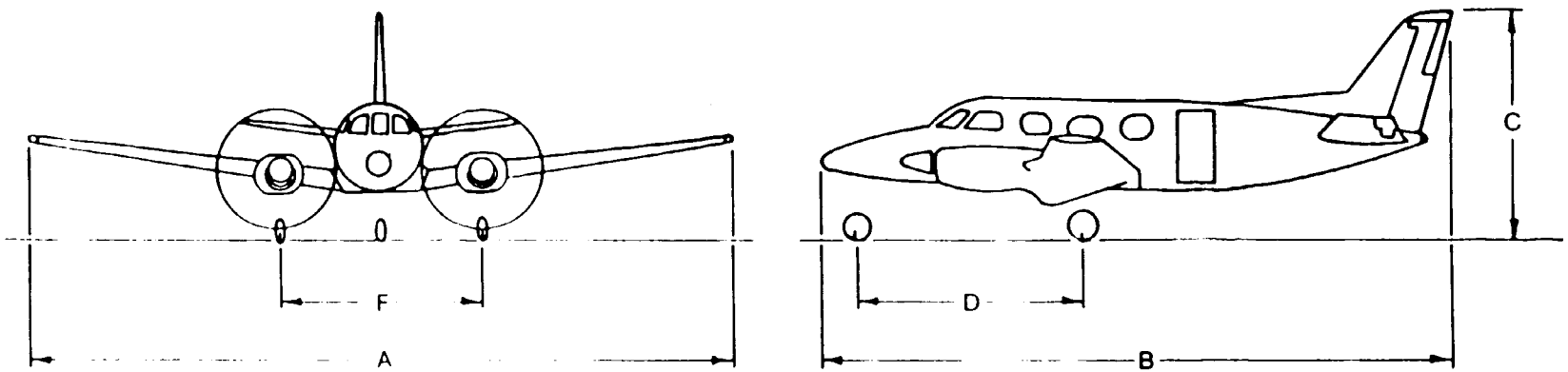

Figure C-63. Swearingen Merlin II and III