MODEL	MAXIMUM TIRE PRESSURE, PSI		A	B	C	D	E	F	G	H	J	K	L	M	N
	MAIN GEAR	NOSE GEAR													
C-135B	160	135	130.8	134.4	41.7	45.7	63.1	22.1	27.2	46.1	52.9	2.3	4.2	45.7	13.0
KC-135R	170	135	130.8	136.2	41.7	45.7	63.1	22.1	26.7	45.7	52.9	1.8	3.8	45.7	13.1

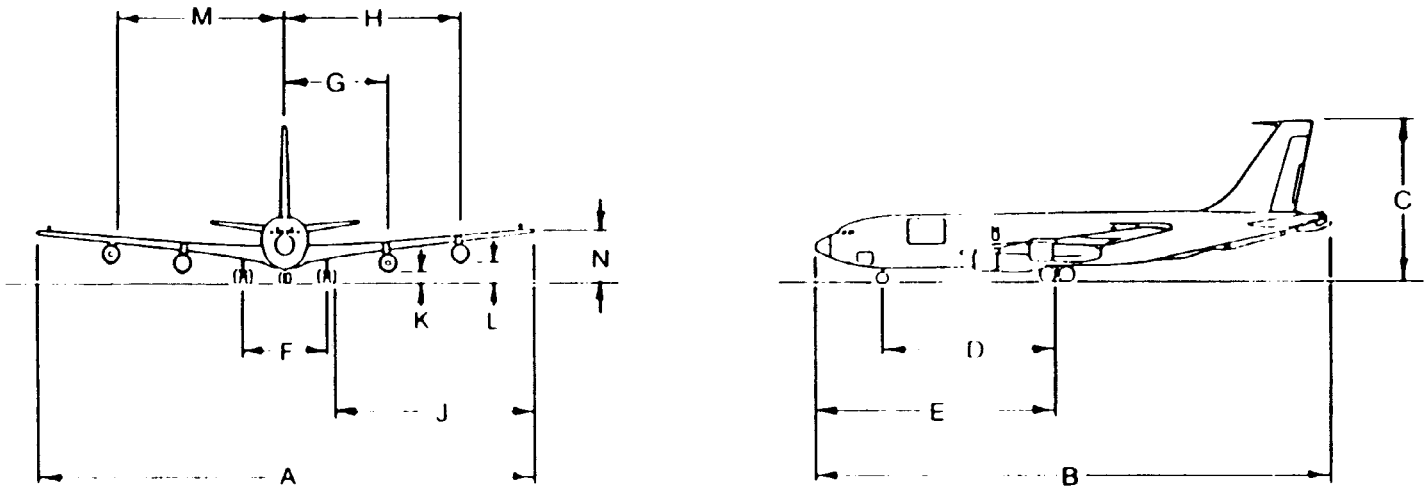

Figure C-14. C-135B, Stratolifter and KC-135R, Stratotanker (Boeing)

MODEL	MAXIMUM TIRE PRESSURE, PSI		A	B	C	D	E	F	G	H	J	K	L	M	N
	MAIN GEAR	NOSE GEAR													
B	144	88	130.8	144.5	41.3	52.3	69.8	22.1	27.2	46.1	52.3	2.3	4.2	45.7	11.6
C	190	114	145.8	152.9	41.8	59.0	76.4	22.1	32.5	51.4	59.8	2.8	4.6	45.7	12.1

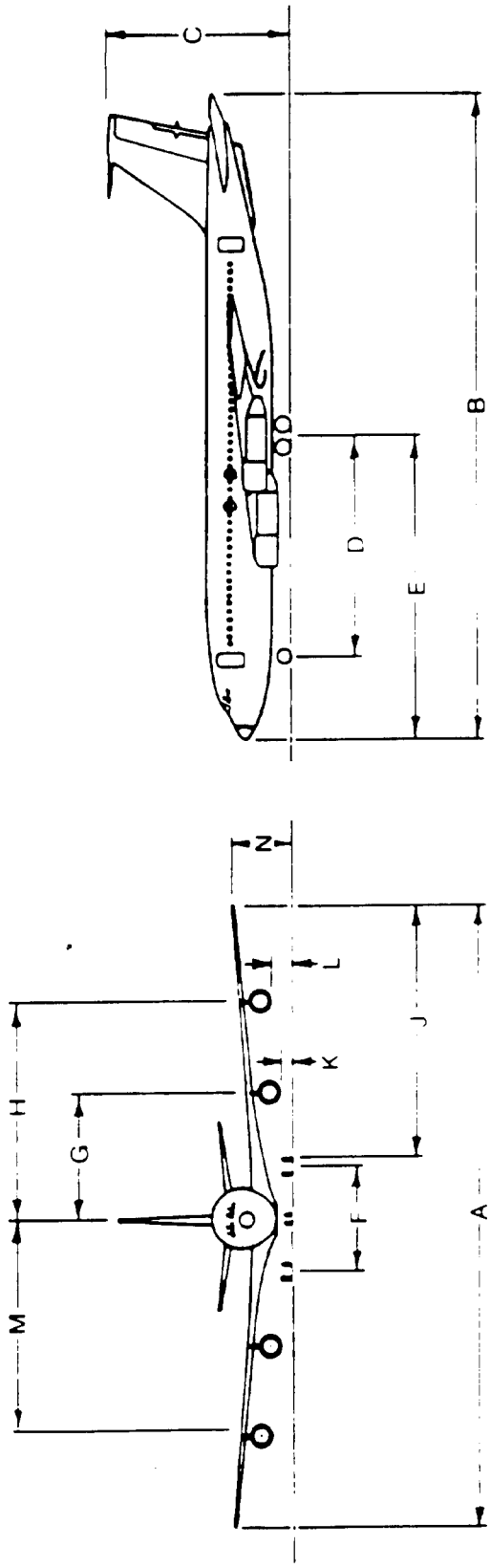

Figure C-15. C-137 (Boeing)

MAXIMUM TIRE PRESSURE, PSI		A	B	C	D	E	F	G	H	J	K	L	M	N
MAIN GEAR	NOSE GEAR													
220	180	54.5	60.5	20.5	20.7	34.9	12.3	5.6	7.9	19.3	5.2	5.2	10.0	4.4

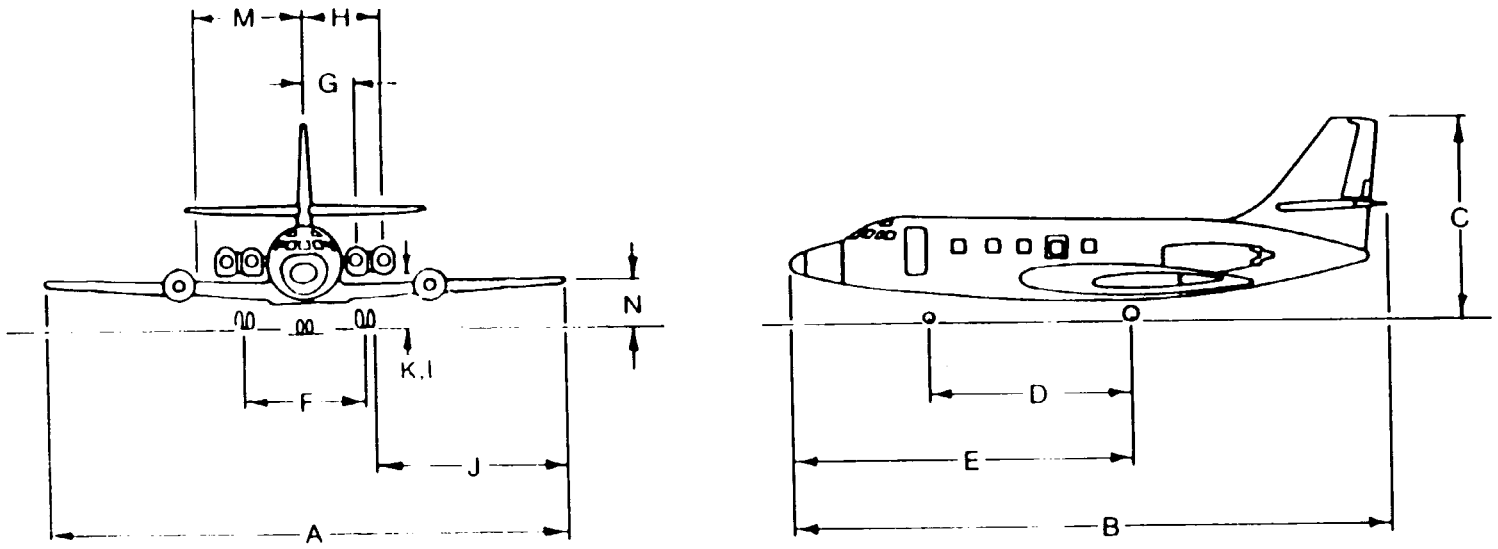

Figure C-16. C-140A/B, Jetstar (Lockheed)

MODEL	MAXIMUM TIRE PRESSURE, PSI		A	B	C	D	E	F	G	H	J	K	L	M	N
	MAIN GEAR	NOSE GEAR													
A	180	200	160.0	145.0	39.3	53.0	60.6	17.5	23.8	38.3	70.0	3.9	3.3	38.3	6.0
B	200	180	160.0	168.3	39.3	66.3	85.5	17.5	23.8	38.3	69.2	†	†	38.3	11.1

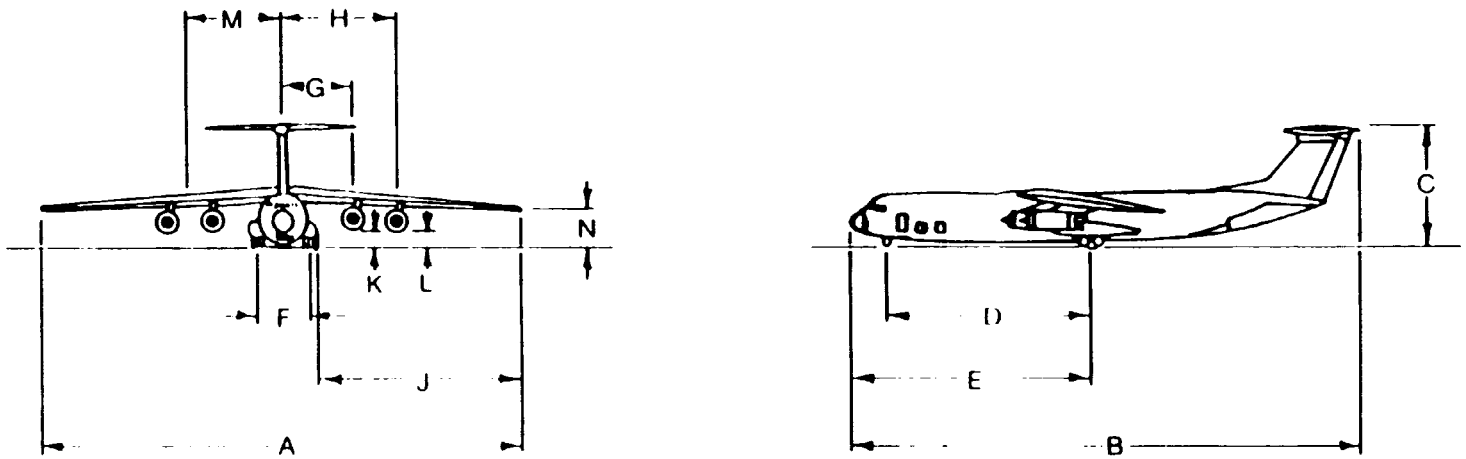

Figure C-17. C-141, Starlifter (Lockheed)

MAXIMUM TIRE PRESSURE, PSI		A	B	C	D	E	F	G	J	K	M	N	P
MAIN GEAR	NOSE GEAR												
205	190	165.3	181.6	57.8	72.3	100.3	35.0	27.6	62.1	2.9	42.7	14.5	29.5

NOTE TIRE PRESSURE OF CENTERLINE TWIN TIRES IN MAIN GEAR VICINITY IS 175 PSI

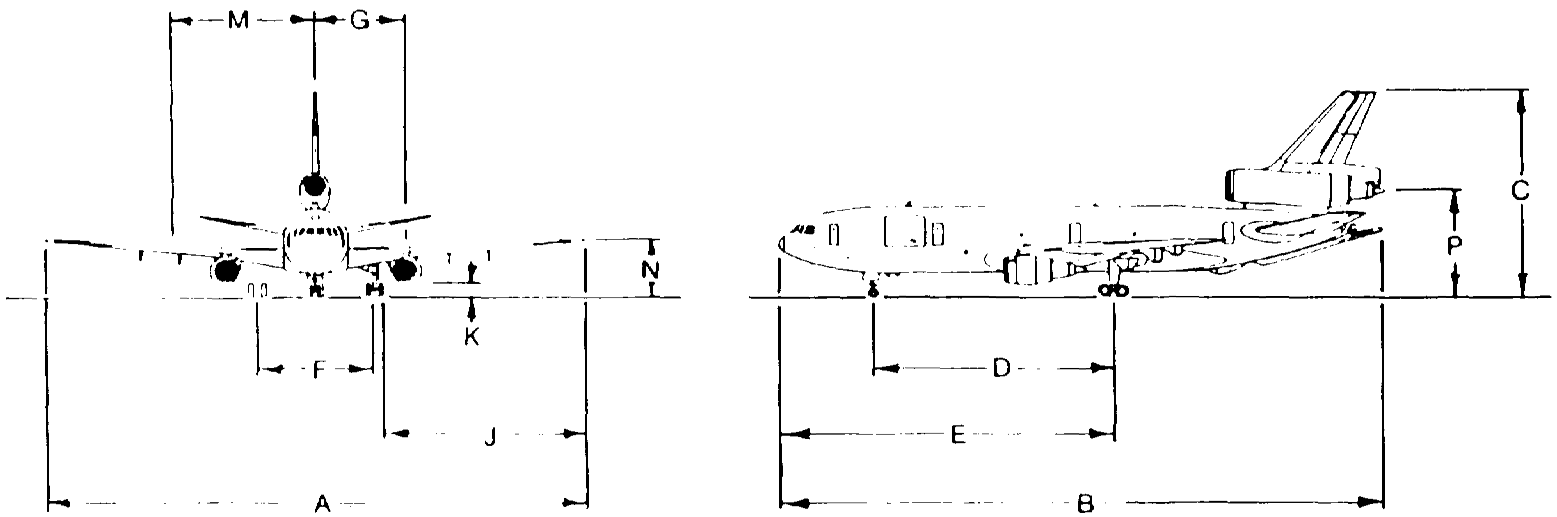

Figure C-18. KC-10A, Extender (McDonnell Douglas)

MAXIMUM TIRE PRESSURE, PSI		A	B	C	D	E	F	G	H	J	K	L	M	N
MAIN GEAR	NOSE GEAR													
208	218	195.7	231.3	63.4	84.0	109.4	36.1	39.2	69.5	77.3	2.8	5.5	40.0	17.6

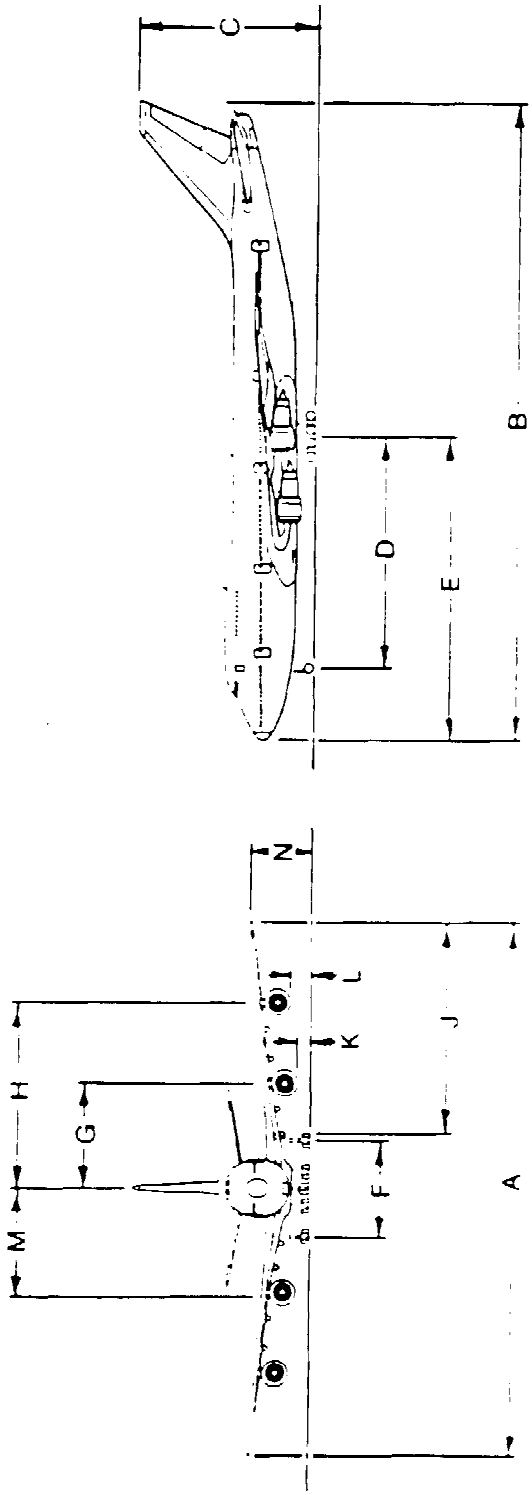

Figure C-19. VC-25A, Air Force One (Boeing)

MAXIMUM TIRE PRESSURE, PSI		A	B	C	D	E	F	G	H	J	K	L	M	N
MAIN GEAR	NOSE GEAR													
200	119	145.8	152.9	41.8	59.0	76.4	22.1	33.0	52.0	59.8	2.8	4.6	45.6	12.3

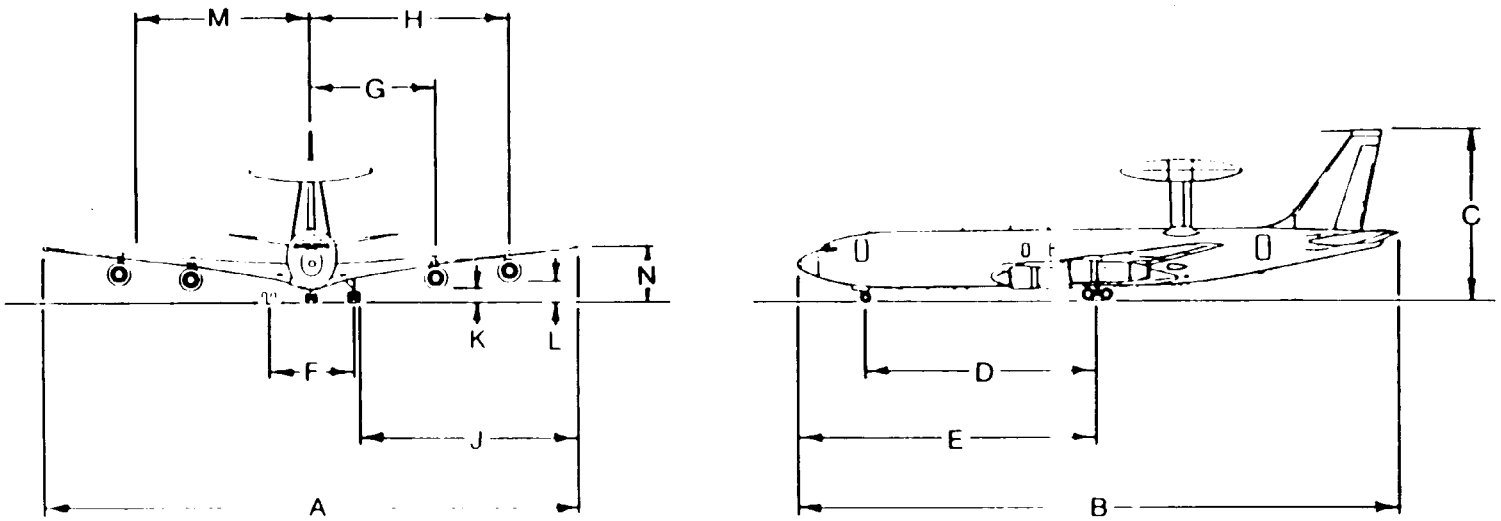

Figure C-20. E-3A/B/C, Sentry AWACS (Boeing)

MAXIMUM TIRE PRESSURE, PSI		A	B	C	D	E	F	G	H	J	K	L	M	N
MAIN GEAR	NOSE GEAR													
203	203	195 7	231 3	63 4	84 0	109.4	36 2	39 2	69.5	77.3	2 8	5.5	29.8	17.6

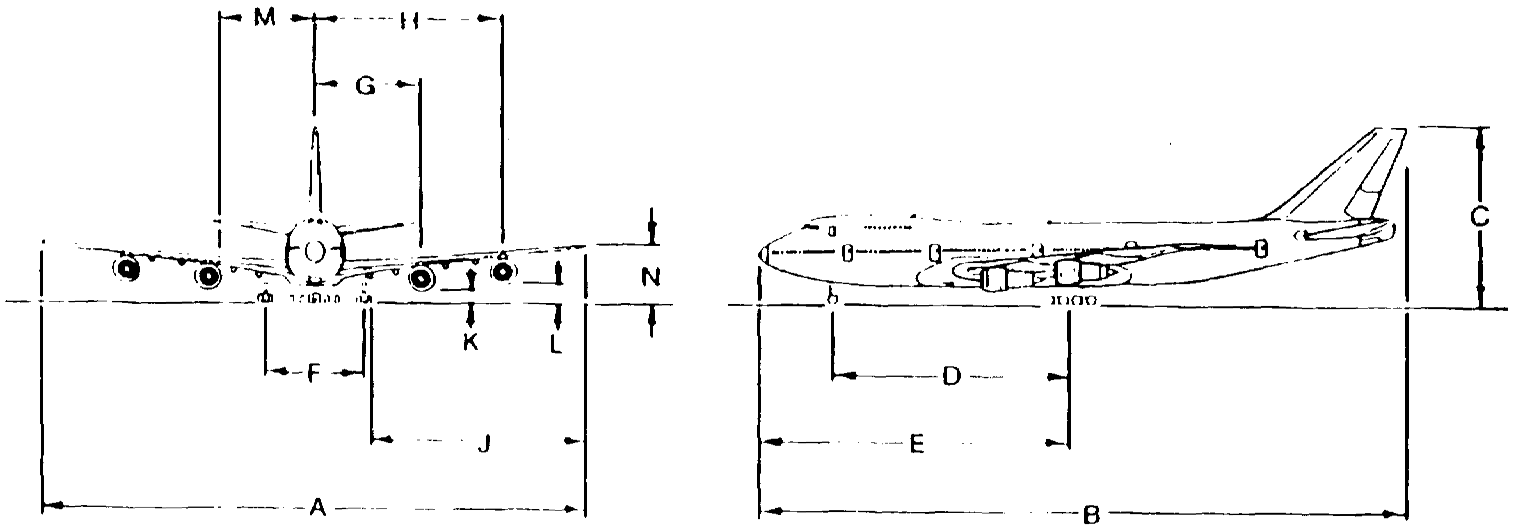

Figure C-21. E-4A/B, NEACP (Boeing)

MAXIMUM TIRE PRESSURE, PSI		A	B	C	D	E	F	G	H	J	K	L	M	N
MAIN GEAR	NOSE GEAR													
194	114	145.8	152.4	42.5	59.0	83.3	22.1	33.0	52.0	59.8	2.8	4.6	34.5	12.1

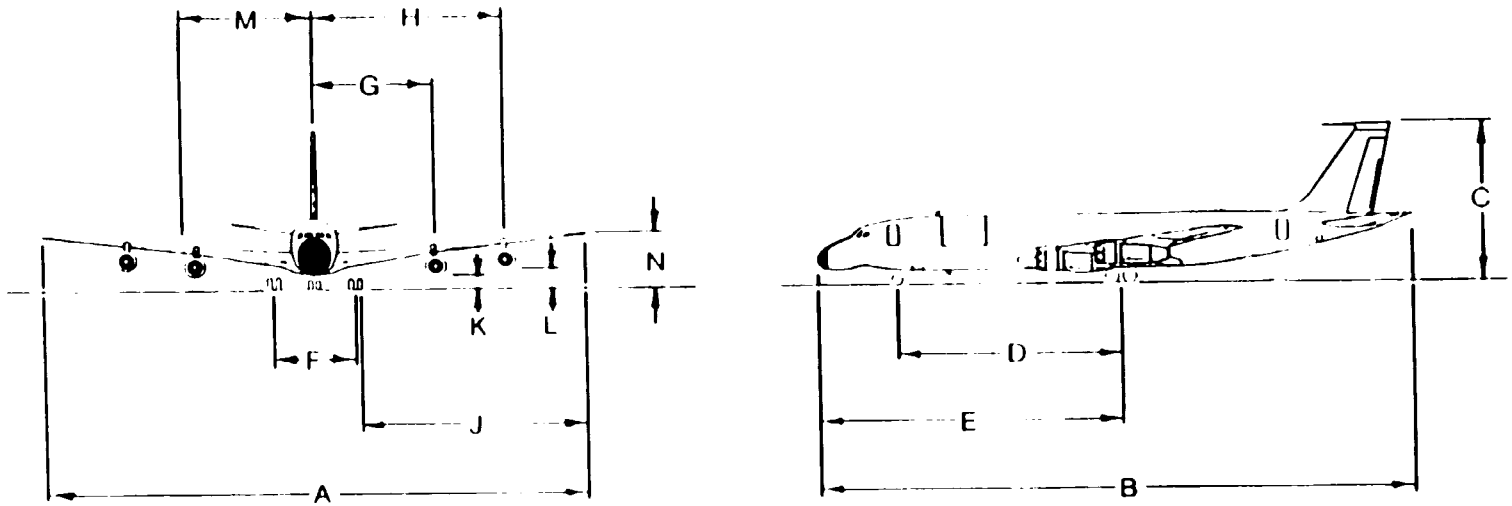

Figure C-22. EC-18B, ARIA (Boeing)

MODEL	MAXIMUM TIRE PRESSURE, PSI		A	B	C	D	E	F	G	H	J	K	L	M	N
	MAIN GEAR	NOSE GEAR													
EC-130E/H	119	60	132.6	99.5	39.2	31.8	43.6	14.3	16.3	33.3	60.0	6.0	6.7	18.0	15.3
MC 130E/H WC 130E/H	119	60	132.6	99.5*	39.2	31.8	43.6	14.3	16.3	33.3	60.0	6.0	6.7	18.0	15.3

* DIMENSION "B" IS 108.11 FEET FOR MC 130E/H

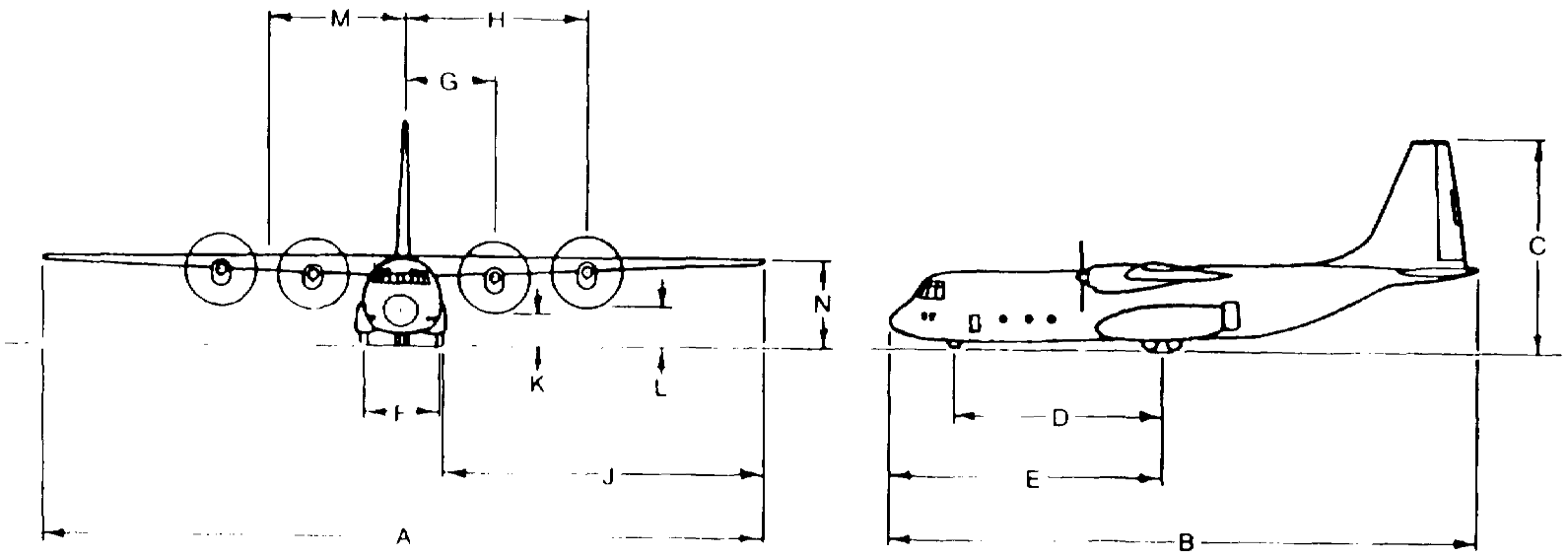

Figure C-23. EC-130E/H, MC-130E/H, and WC-130E/H, Hercules (Lockheed)

MODEL	MAXIMUM TIRE PRESSURE, PSI		A	B	C	D	E	F	G	H	J	K	L	M	N
	MAIN GEAR	NOSE GEAR													
EC-135A/G/H/K/L/P	160	135	130.8	136.2	41.7	45.7	63.1	22.1	27.2	46.1	52.9	2.6*	4.7*	45.7	13.0
EC-135C/J/Y	160	135	130.8	136.2	41.7	45.7	63.1	22.1	27.2	46.1	52.9	2.0**	4.1**	45.7	13.0
EC-135E	160	135	130.8	141.5	41.7	45.7	68.3	22.1	27.2	46.1	52.9	2.2	4.3	45.7	13.0
RC-135M/S/W	160	135	130.8	140.0	41.7	45.7	69.1	22.1	27.2	46.1	52.9	2.2	4.3	45.7	13.0
RC-135U	160	135	130.8	140.5	41.7	45.7	63.1	22.1	27.2	46.1	52.9	2.0	4.1	45.7	13.0
RC-135V	160	135	130.8	140.5	41.7	45.7	63.1	22.1	27.2	46.1	52.9	2.0	4.1	45.7	13.0
WC-135B	160	135	130.8	134.5	41.7	45.7	63.1	22.1	27.2	46.1	52.9	2.2	4.3	45.7	13.0

* THE DIMENSIONS "K" AND "L" FOR EC 135H/K/P ARE 2.2 AND 4.3 FT. RESPECTIVELY

** THE DIMENSIONS "K" AND "L" FOR EC 135Y ARE 2.2 AND 4.3 FT. RESPECTIVELY

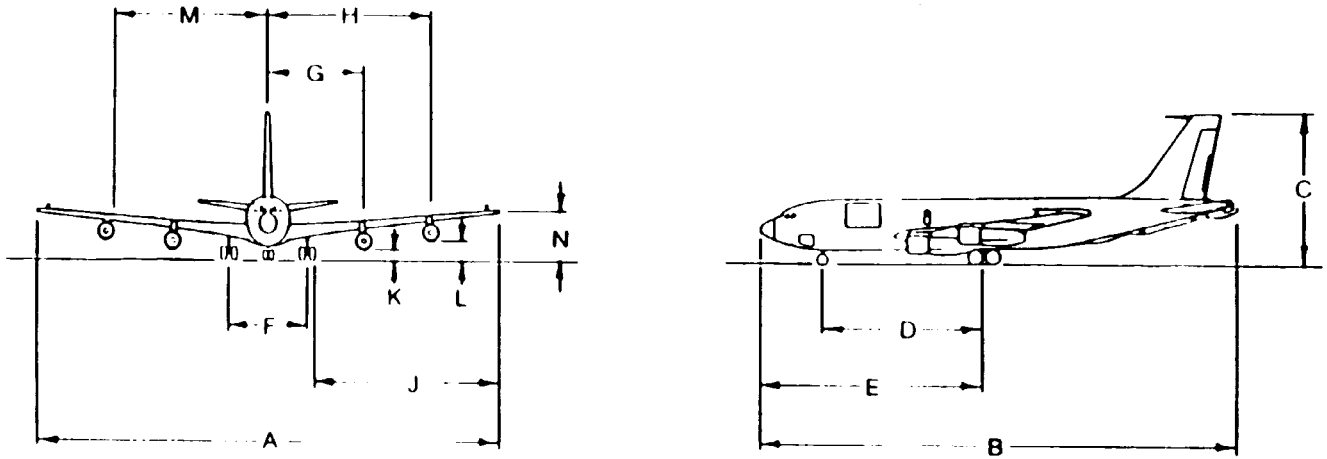

Figure C-24. EC-135, RC-135, and WC-135 (Boeing)

MAXIMUM TIRE PRESSURE, PSI		A	B	C	D	E	F	G	J	K	M	N
MAIN GEAR	NOSE GEAR											
180	280	63.0	75.5	20.0	24.0	48.2	10.0	†	25.9	†	28.7	8.3

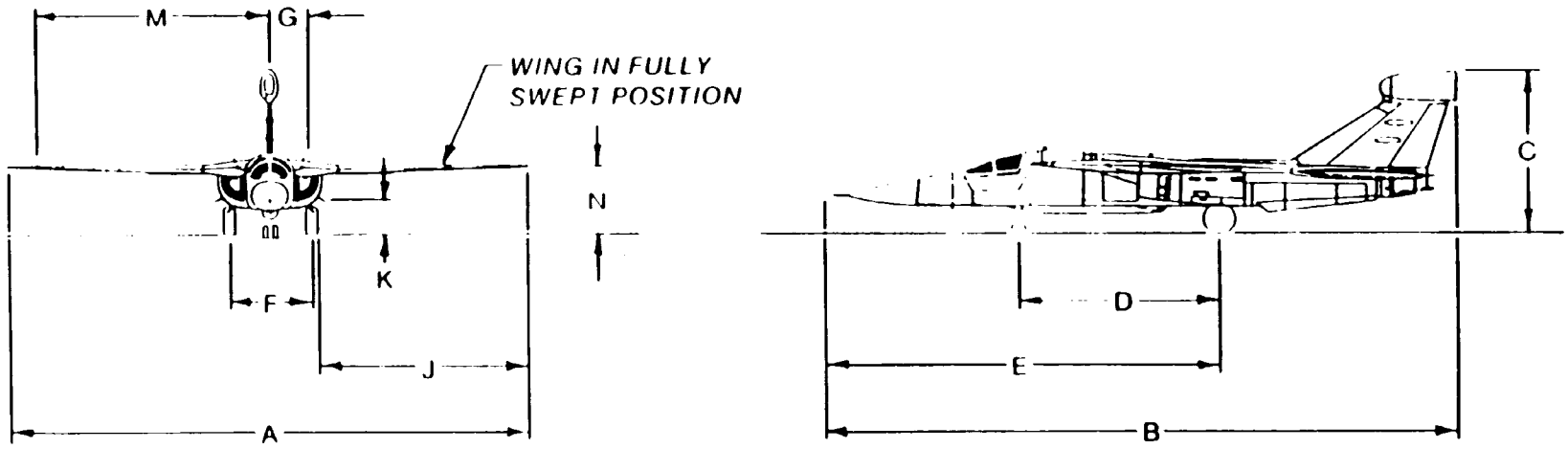

Figure C-25. EF-111A, Raven (General Dynamics/Grumman)

MAXIMUM TIRE PRESSURE, PSI		A	B	C	D	E	F	G	J	K	M	N
MAIN GEAR	NOSE GEAR											
45	45	38.0	29.2	9.4	7.8	†	8.2	0.0	†	0.8	†	†

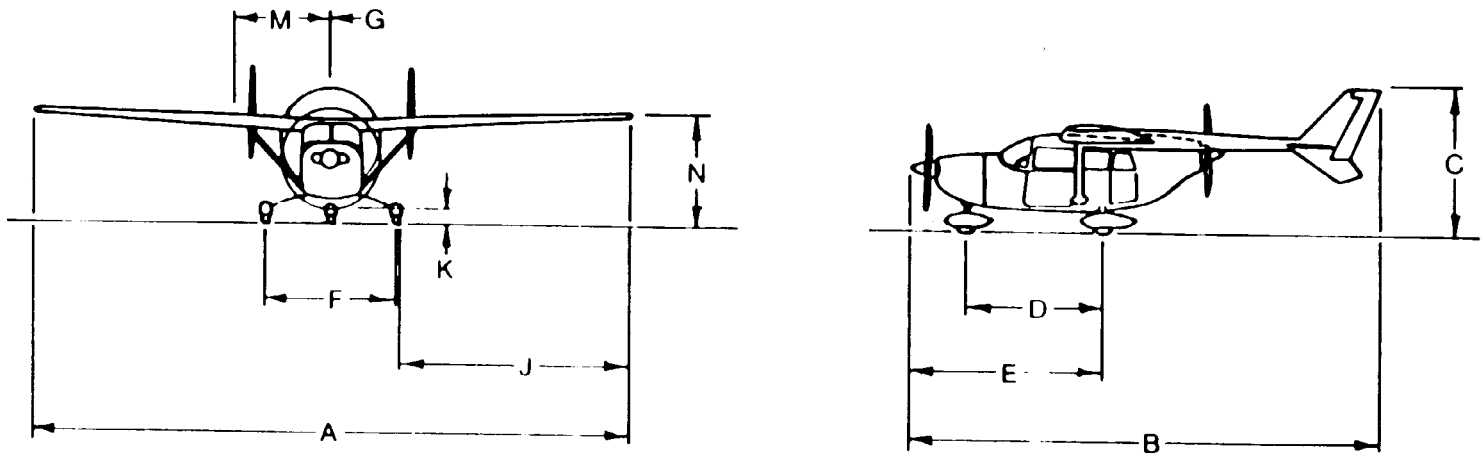

Figure C-26. O-2A/B (Cessna)

MAXIMUM TIRE PRESSURE, PSI		A	B	C	D	E	F	G	J	K	M	N
MAIN GEAR	NOSE GEAR											
125	60	38.3	31.8	9.5	7.8	†	13.7	†	12.0	†	†	3.3

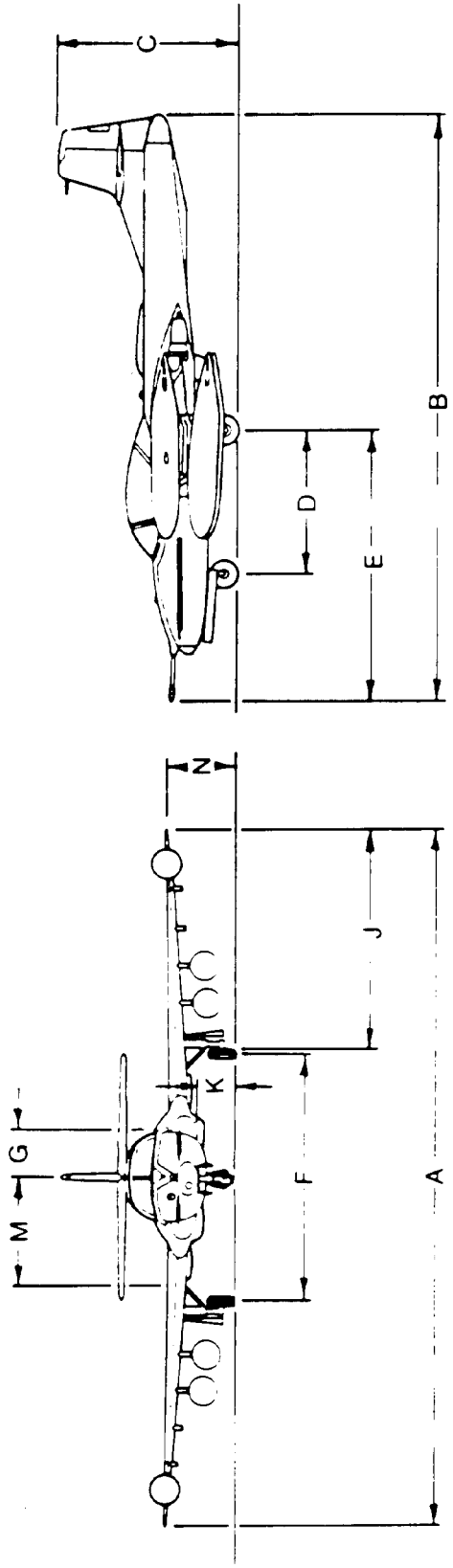

Figure C-27. OA-37B, Dragonfly (Cessna)

MODEL	MAXIMUM TIRE PRESSURE, PSI		A	B	C	D	E	F	G	J	K	M	N
	MAIN GEAR	NOSE GEAR											
B, D	90	65	48.0	43.9	12.7	11.7	17.5	9.2	9.3	22.0	3.2	†	7.3
C	90	65	42.0	41.1*	12.7	11.7	15.5*	9.2	9.3	19.0	3.2	†	6.9

* DIMENSIONS ARE MEASURED FROM NOSE OF AIRCRAFT

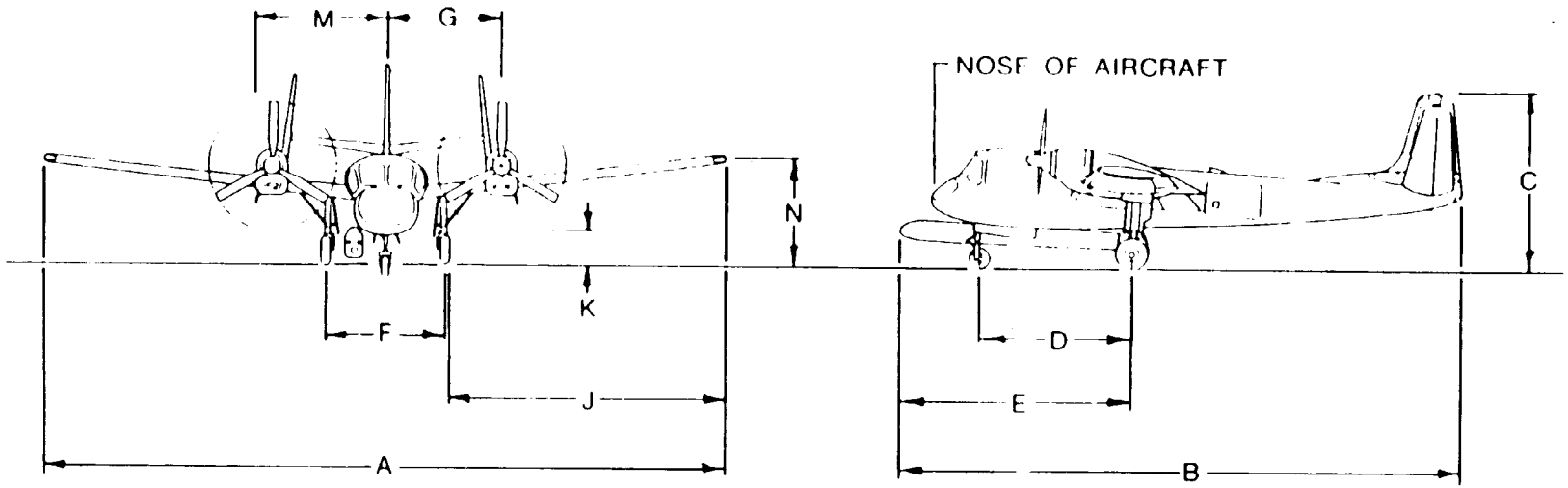

Figure C-28. OV-1, Mohawk (Grumman)

MAXIMUM TIRE PRESSURE, PSI		A	B	C	D	E	F	G	J	K	M	N
MAIN GEAR	NOSE GEAR											
65	80	40.0	41.6	15.2	11.7	17.9	14.8	7.3	12.3	2.0	†	†

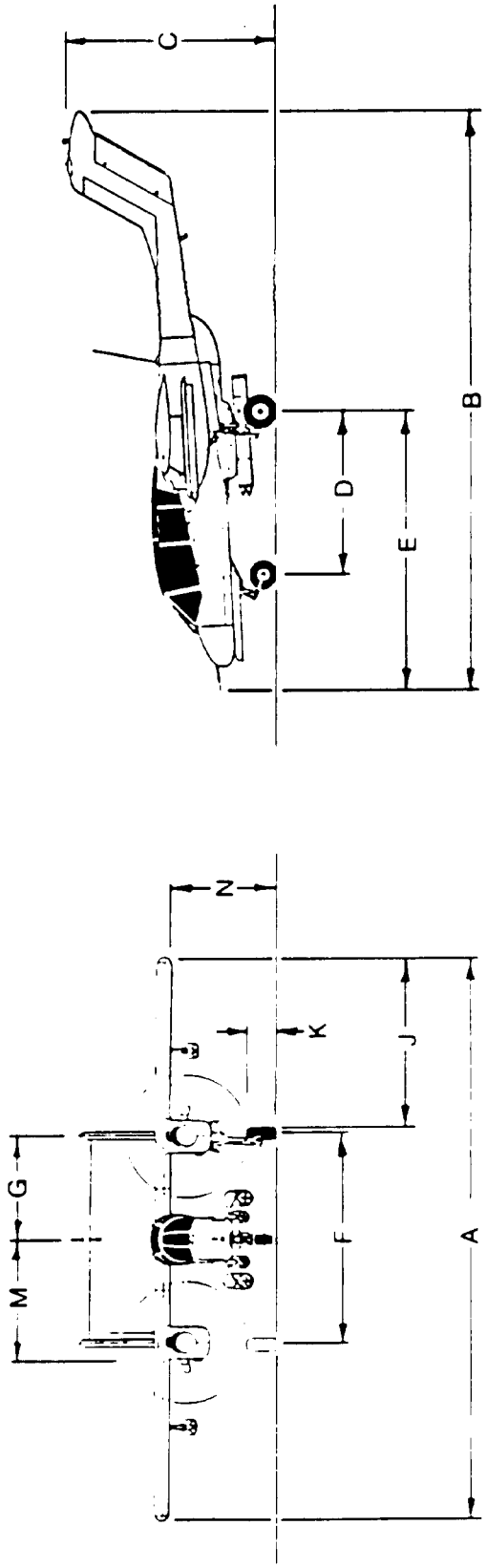

Figure C-29. OV-10A, Bronco (Rockwell International)

MAXIMUM TIRE PRESSURE, PSI		A	B	C	D	E	F	G	J	K	M	N
MAIN GEAR	NOSE GEAR											
96	60	54.5	43.8	15.0	15.0	†	17.2	8.6	†	1.2	12.7	†

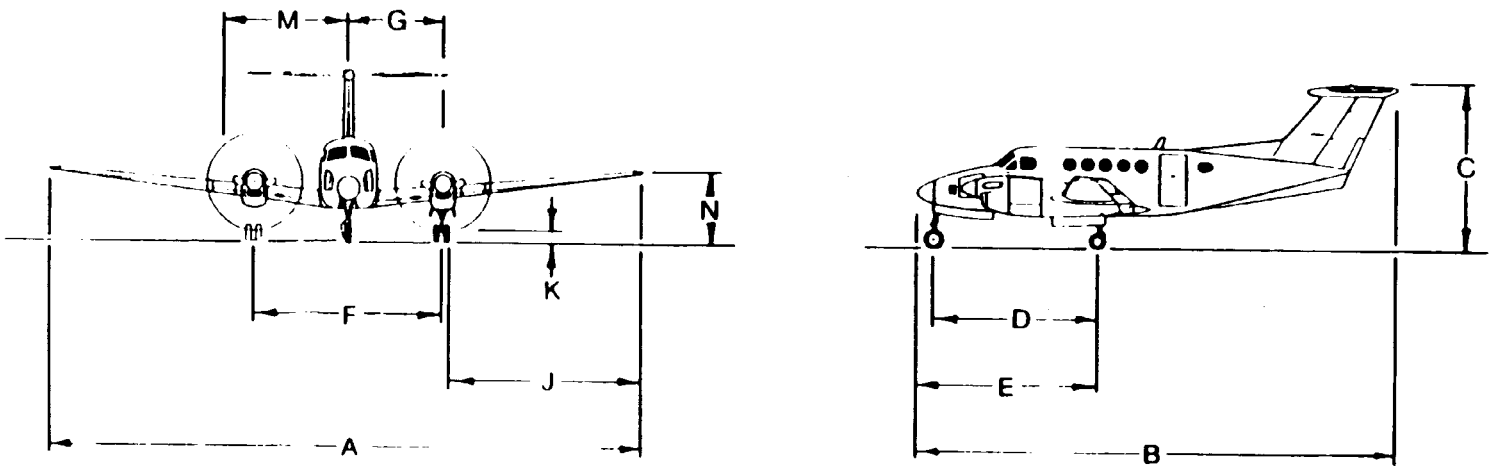

Figure C-30. RC-12D/G/H/K and U-21J (Beech)

MAXIMUM TIRE PRESSURE, PSI		A	B	C	D	E	F	G	J	K	M	N
MAIN GEAR	NOSE GEAR											
265	215	38.4	63.0	16.4	23.3	†	17.9	†	10.0	†	8.9	†

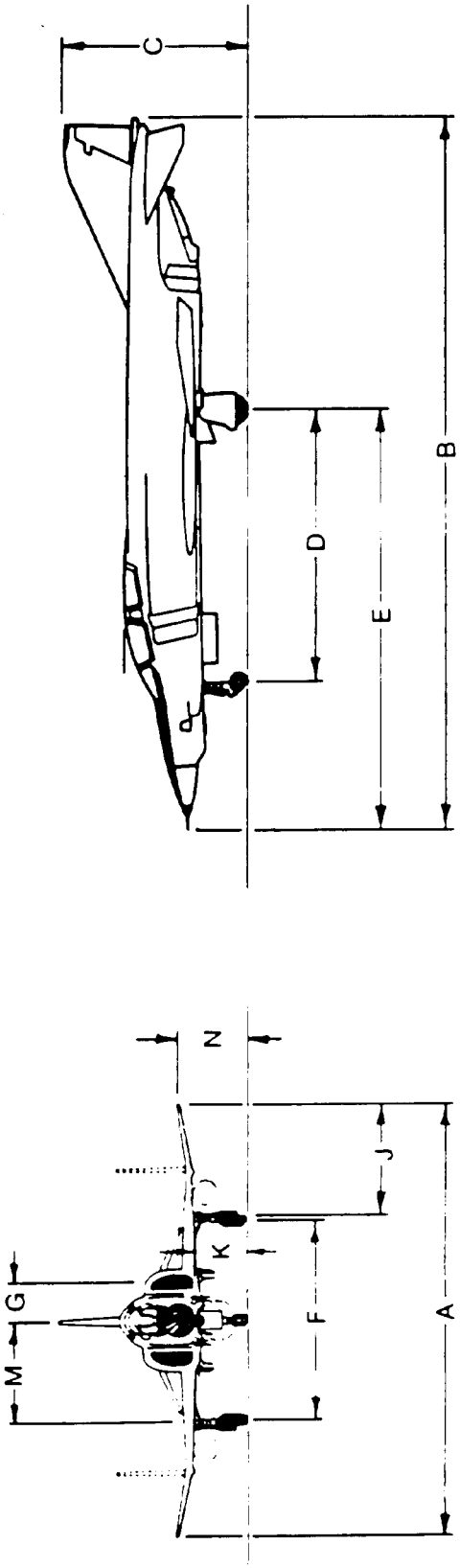

Figure C-31. RF-4C, Phantom II (McDonnell Douglas)

MODEL	MAXIMUM TIRE PRESSURE, PSI		A	B	C	D	E	F	G	J	K	M	N
	MAIN GEAR	NOSE GEAR											
RU-21A/H	55	55	50.9	35.5	14.2	12.3	13.8	12.8	6.5	18.8	1.0	†	†
U-21A/D/G	55	55	45.9	35.5	14.2	12.3	13.8	12.8	6.5	16.3	1.0	†	6.3

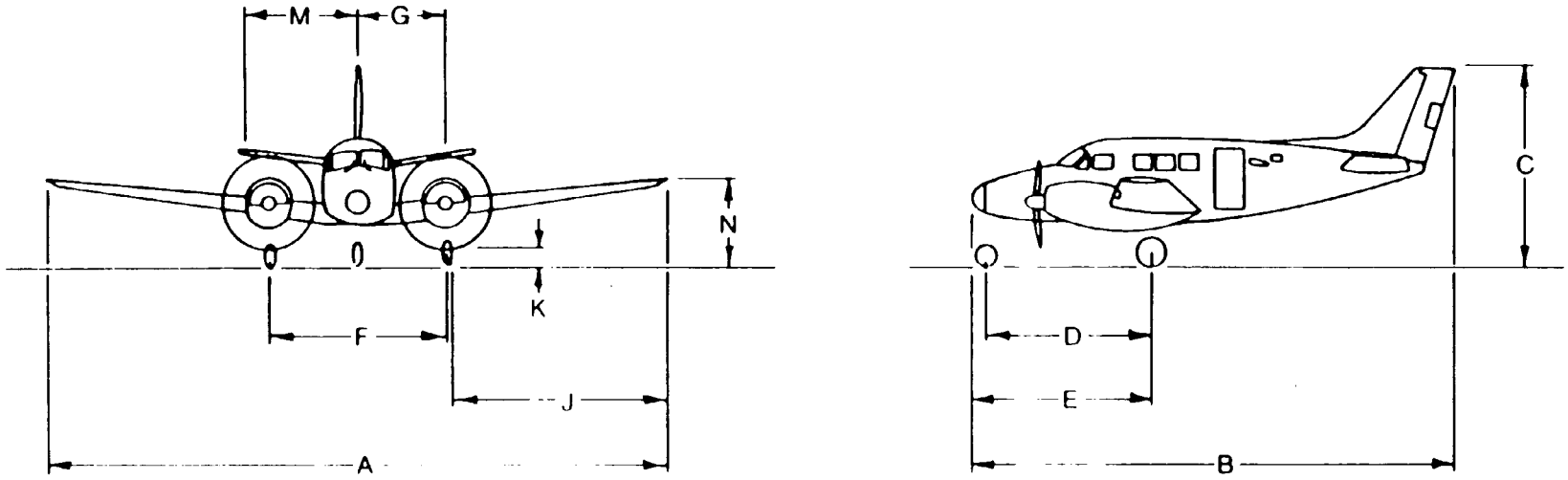

Figure C-32. RU-21A/H and U-21A/D/G (Beech)

MAXIMUM TIRE PRESSURE, PSI		A	B	C	D	E	F	G	J	K	M	N
MAIN GEAR	NOSE GEAR											
415	†	55.6	107.4	18.5	37.9	†	16.7	†	†	†	†	†

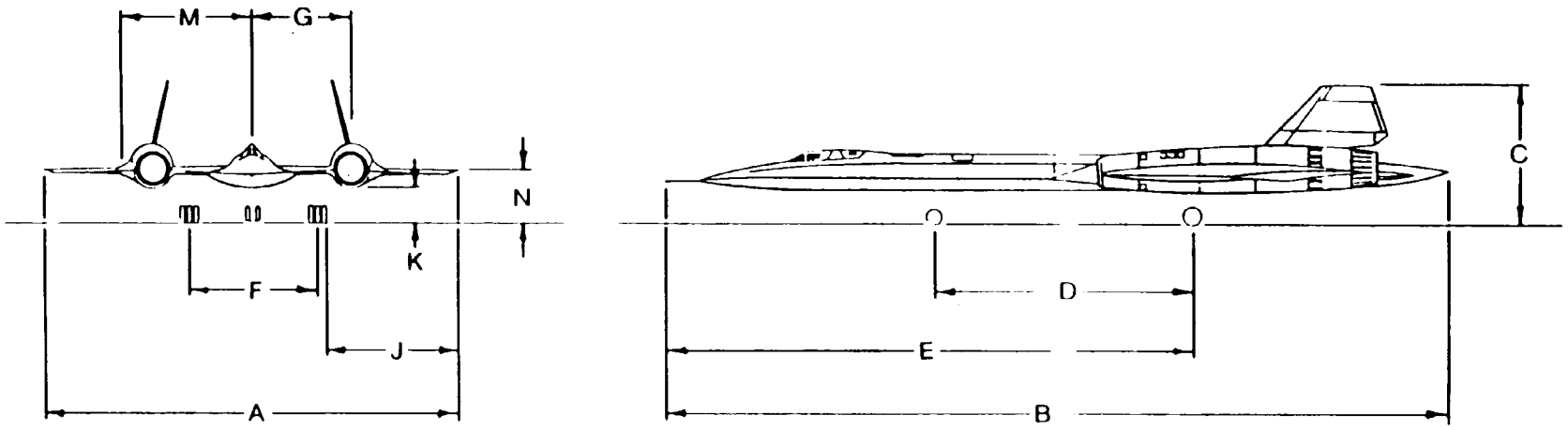

Figure C-33. SR-71A, Blackbird (Lockheed)

MODEL	MAXIMUM TIRE PRESSURE, PSI		A	B	C	D	E	F	G	J	K	M	N
	FORWARD GEAR	AFT AND WING GEAR											
TR-1A	300	SOLID	103.0	63.0	16.0	†	†	†	0.0	†	†	†	†
U-2B/C	†	SOLID	80.0	49.6	13.0	20.0	†	†	0.0	†	†	†	†

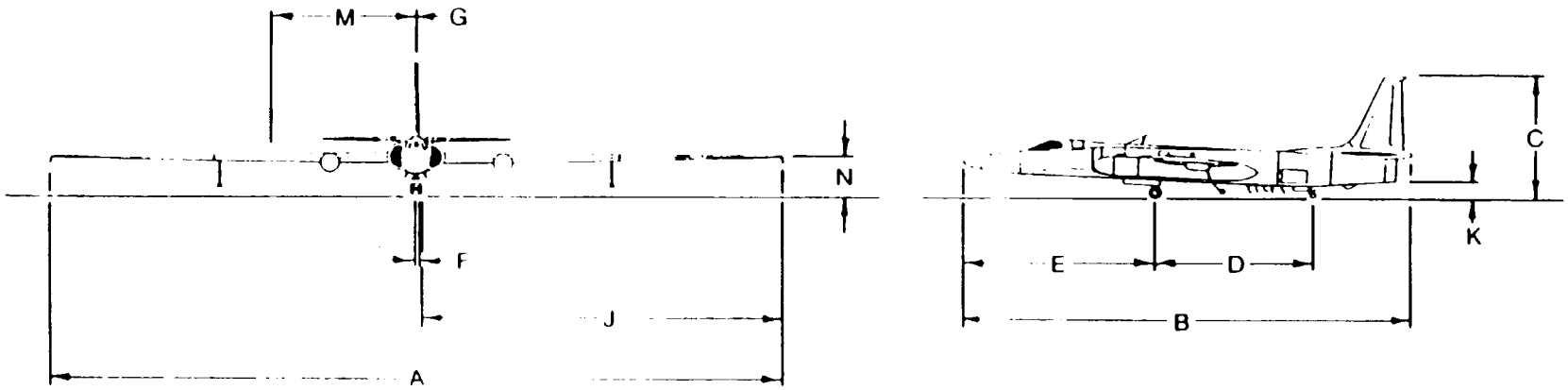

Figure C-34. TR-1 and U-2 (Lockheed)

MAXIMUM TIRE PRESSURE, PSI		A	B	C	D	E	F	G	J	K	M	N
MAIN GEAR	NOSE GEAR											
47	35	45.9	33.3	14.2	12.3	†	12.8	†	†	0.9	†	†

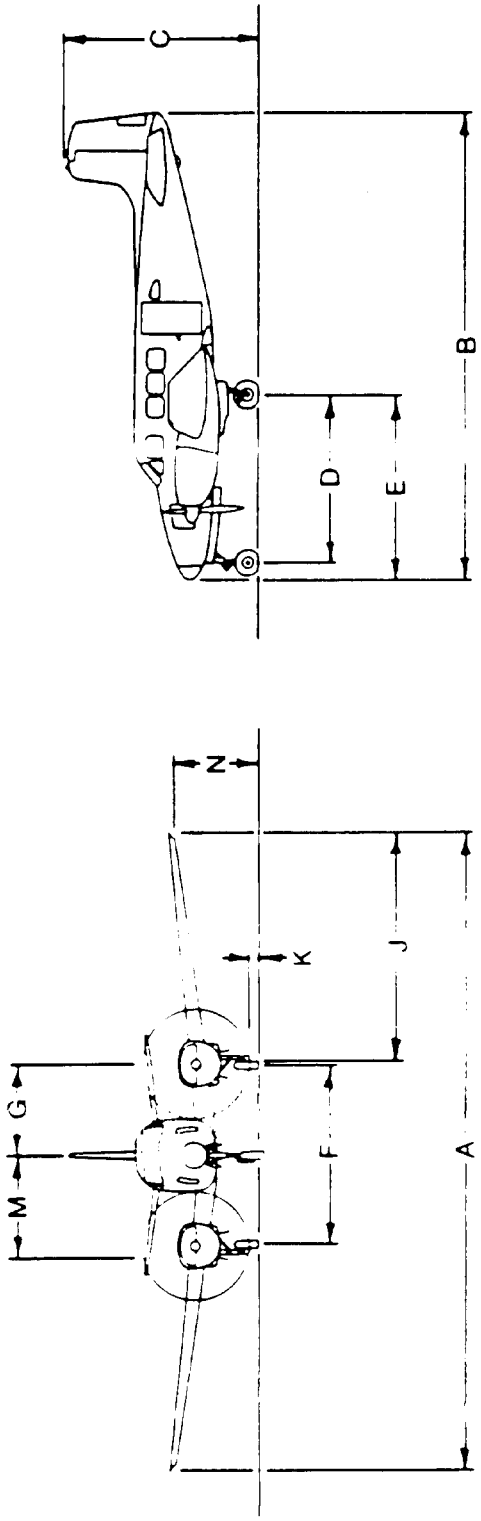

Figure C-35. U-8F, Seminole (Beech)

MAXIMUM TIRE PRESSURE, PSI		A	B	C	D	E	F	G	J	K	M	N
MAIN GEAR	NOSE GEAR											
28	40	39.0	30.3	8.8	23.8	5.0	9.0	0.0	13.6	1.7	4.5	9.8

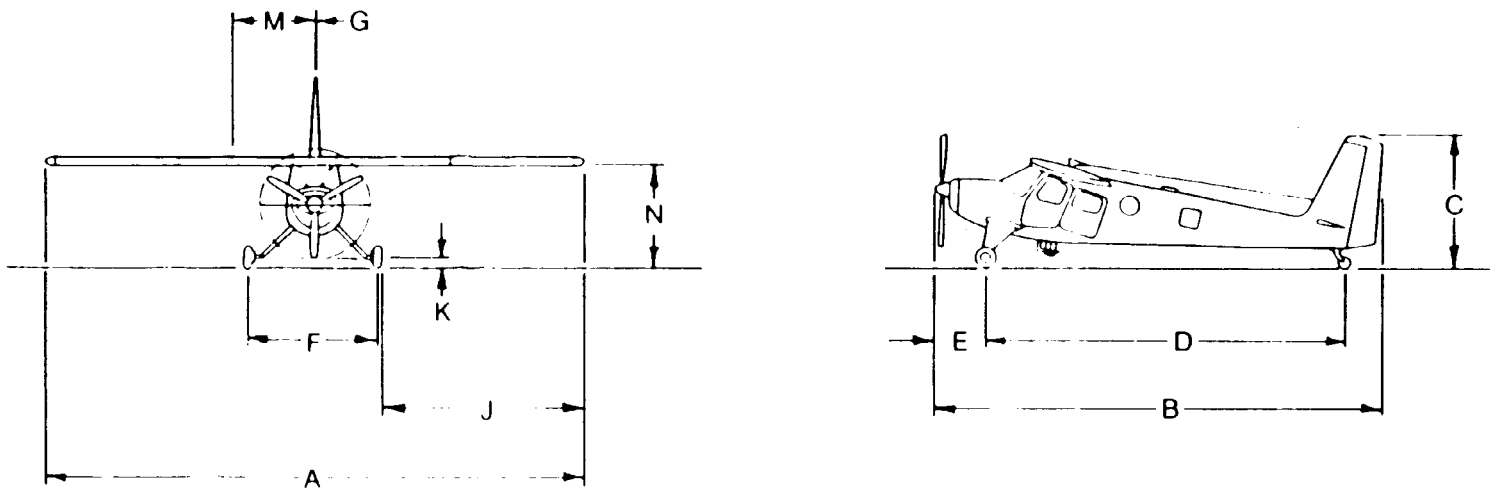

Figure C-36. U-10A, Helio-Courier (Helio)

MAXIMUM TIRE PRESSURE, PSI		A	B	C	D	E	F	G	J	K	M	N
MAIN GEAR	NOSE GEAR											
103	57	45.9	39.9	15.4	14.9	†	13.0	6.5	†	1.1	†	†

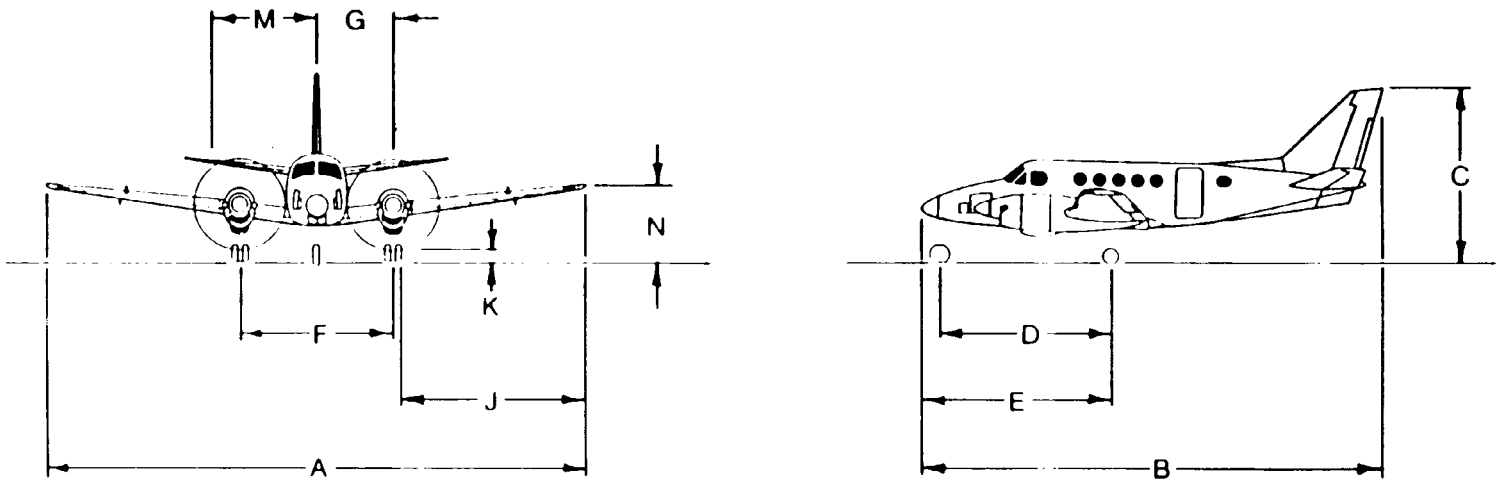

Figure C-37. U-21F (Beech)

MAXIMUM TIRE PRESSURE, PSI		A	B	C	D	E	F	G	J	K	M	N
MAIN GEAR	NOSE GEAR											
38	33	65.0	51.8	19.5	14.9	21.2	12.2	9.2	19.8	5.0	10.1	10.2

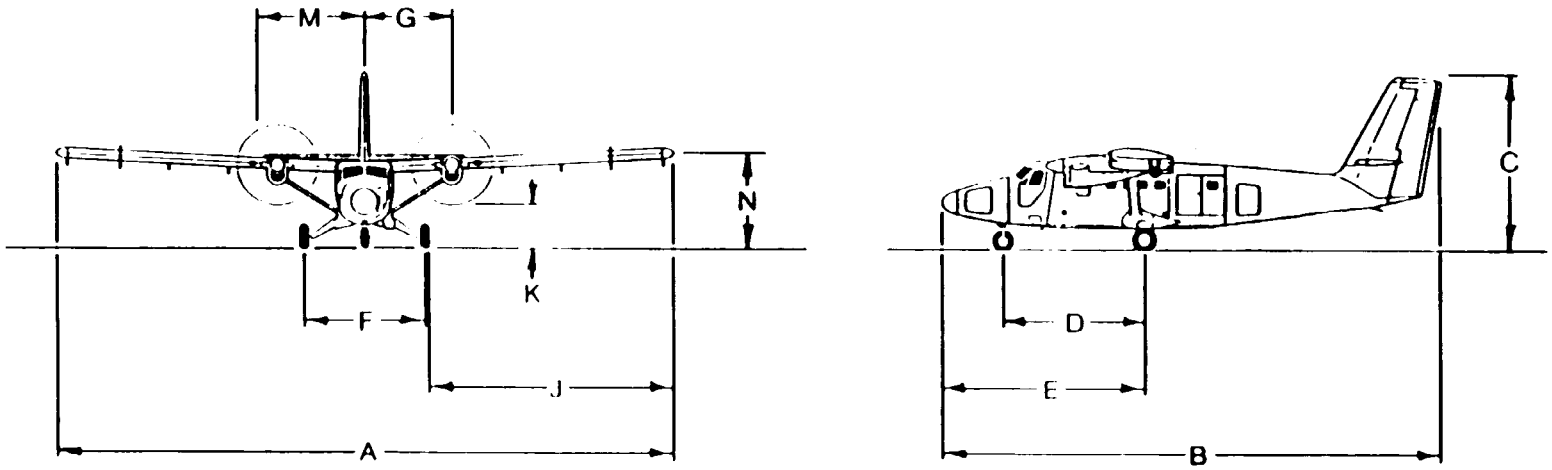

Figure C-38. UV-18, Twin Otter (De Havilland Canada)