APPENDIX C

TURBINE SELECTION CHARTS AND DIMENSIONS

FIGURE	SUBJECT	PAGE
1	FRANCIS TYPE TURBINES, BEST EFFICIENCY AND PHI, SPECIFIC SPEED VS. HEAD	C-3
2	FRANCIS TYPE PUMP-TURBINES, RATED PUMPING CONDITIONS, PUMPING HEAD VS. SPECIFIC SPEED	C-4
3	PROPELLER TYPE TURBINES, RATED CONDITIONS, SPECIFIC SPEED VS. HEAD	C-5
4	FRANCIS TYPE TURBINES, DIMENSIONS AND PROPORTIONS	C-6
5	PROPELLER TYPE TURBINES, DIMENSIONS	C-7
6	WATER VAPOR PRESSURE VS. WATER TEMPERATURE, BAROMETRIC PRESSURE VS. ELEVATION	C-8

DATA AND DIMENSIONAL RATIOS - $D_{TH} = 1.0$

TABLE	SUBJECT	PAGE
1	FRANCIS TYPE TURBINES	C-9
2	FRANCIS AND PROPELLER TYPE TURBINES	C-10
3	FRANCIS TYPE PUMP TURBINES	C-11
4	PROPELLER TYPE TURBINES	C-12
5	PROPELLER TYPE TURBINES	C-13

PAGE C-2 INTENTIONALLY LEFT BLANK

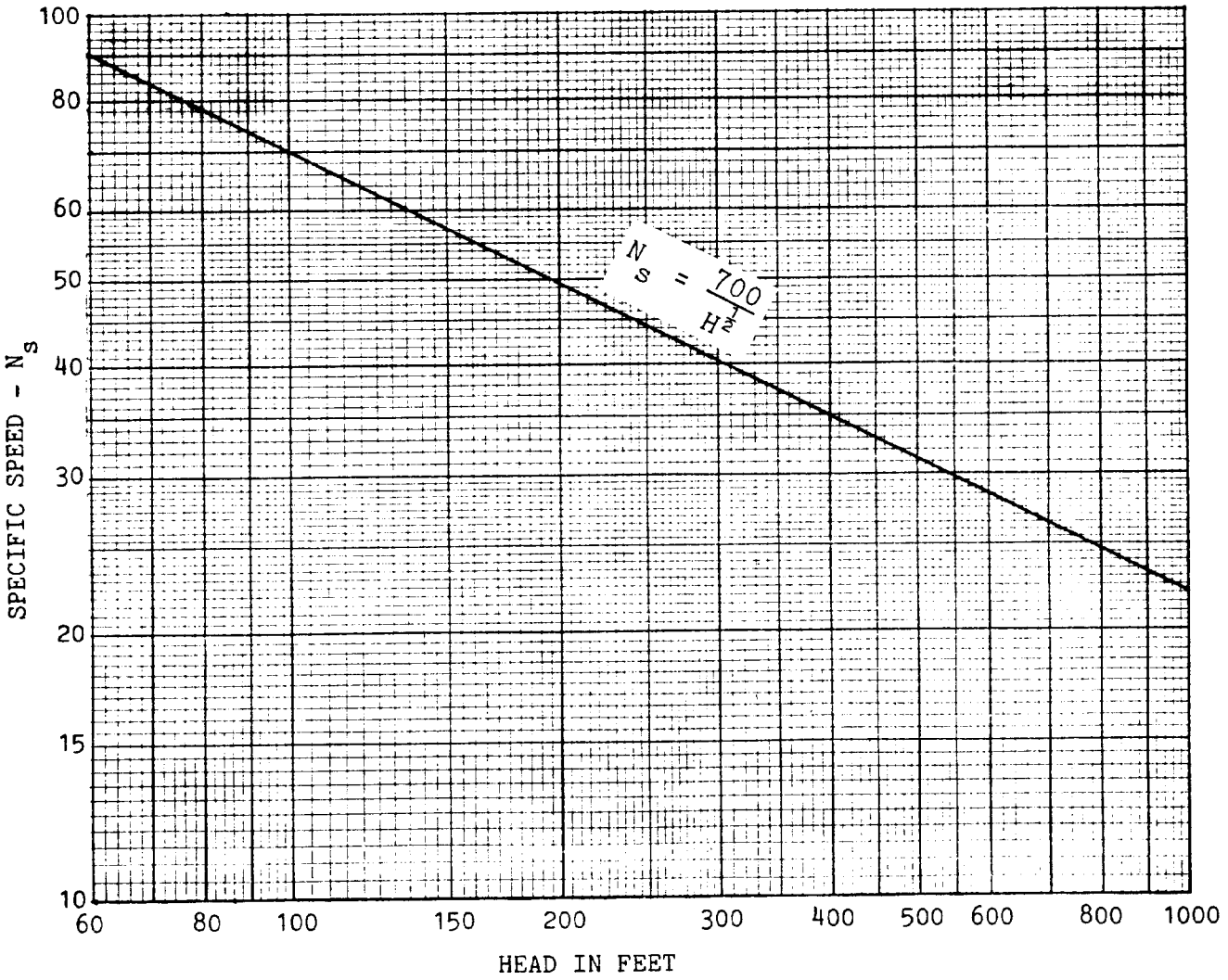

Figure 1. FRANCIS TYPE TURBINES

BEST EFFICIENCY AND PHI

SPECIFIC SPEED VS. HEAD

Note: Plotted points are from existing installations.

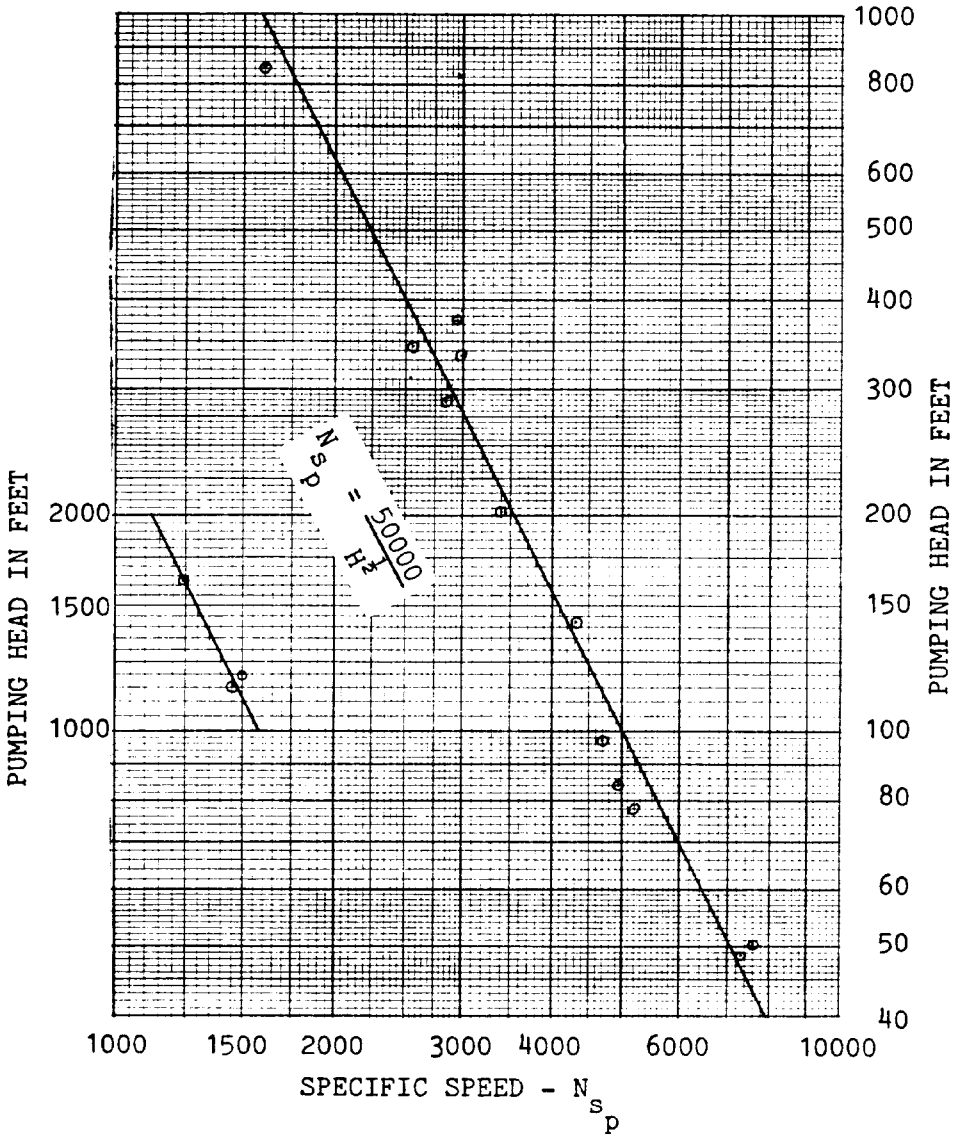

Figure 2. FRANCIS TYPE PUMP-TURBINES

RATED PUMPING CONDITIONS

PUMPING HEAD VS. SPECIFIC SPEED

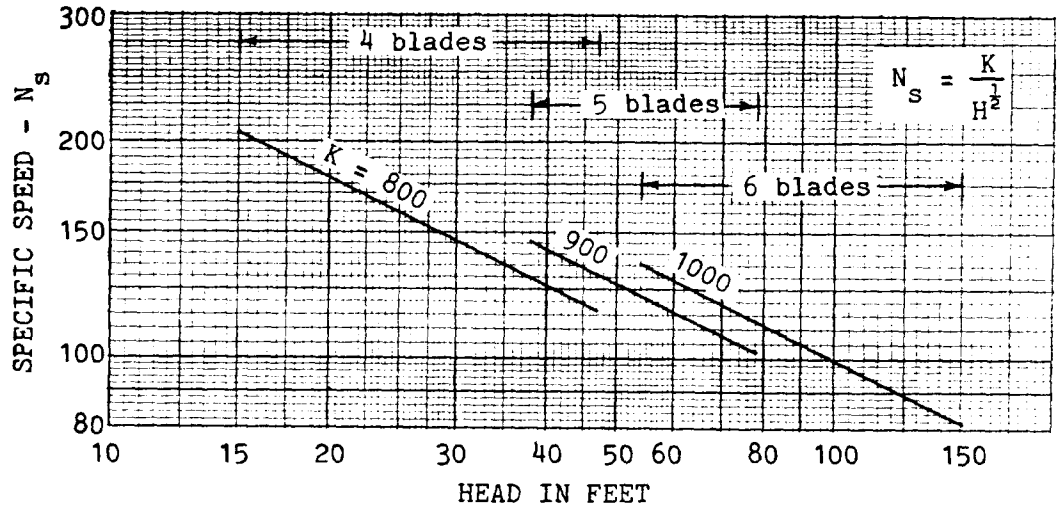

FIXED BLADE RUNNER

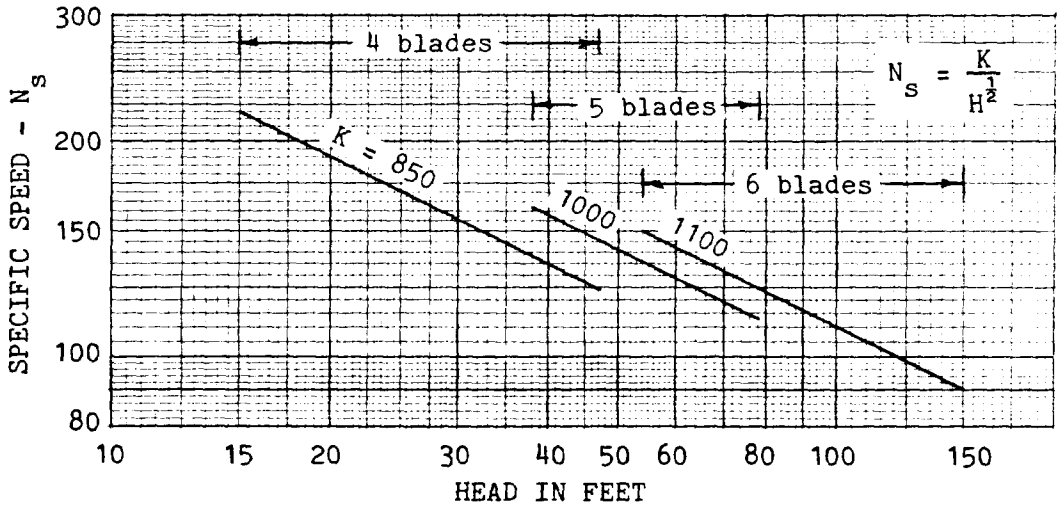

KAPLAN (ADJUSTABLE BLADE) RUNNER

Figure 3. PROPELLER TYPE TURBINES

RATED CONDITIONS

SPECIFIC SPEED VS. HEAD

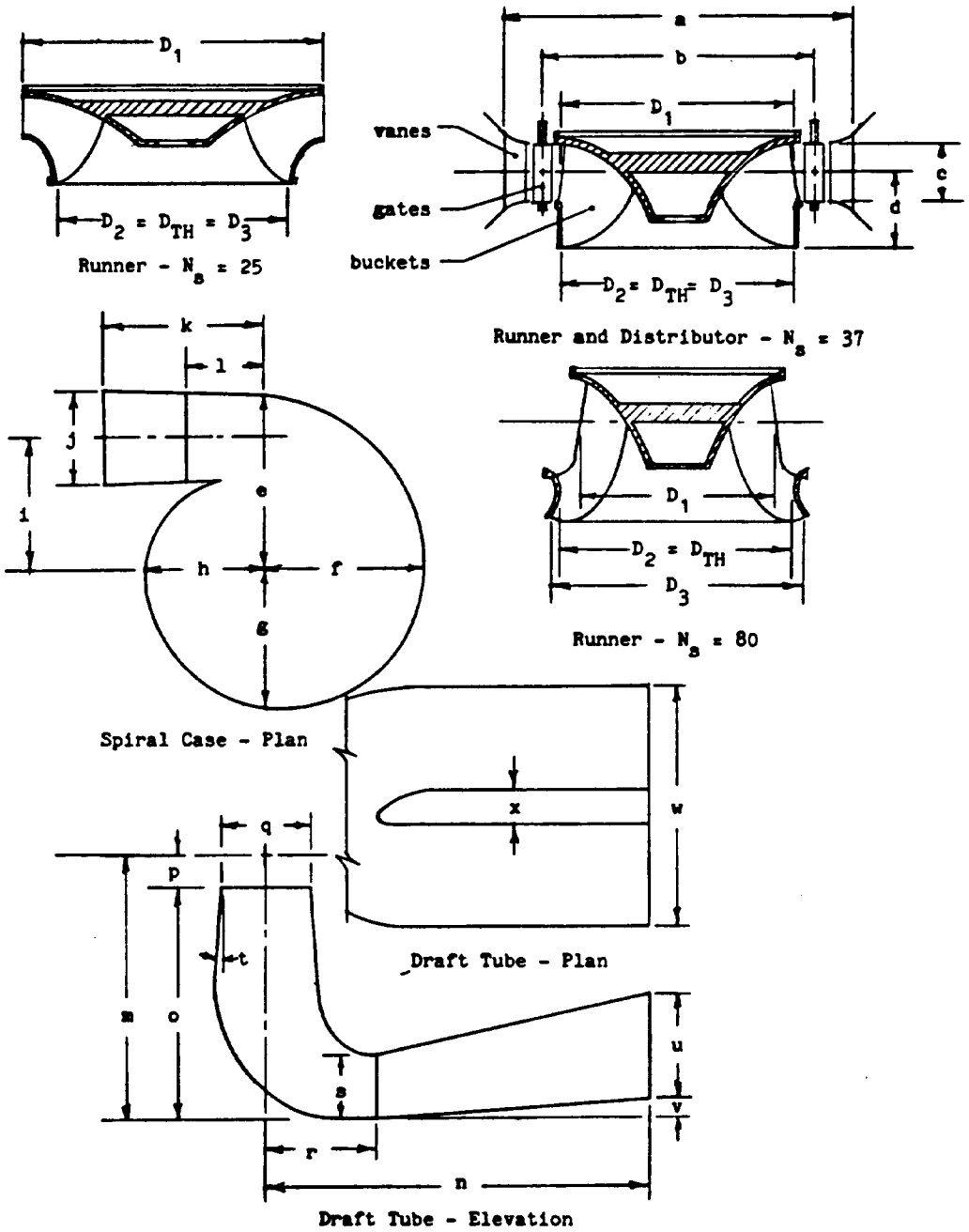

Figure 4. FRANCIS TYPE TURBINES - DIMENSIONS AND PROPORTIONS

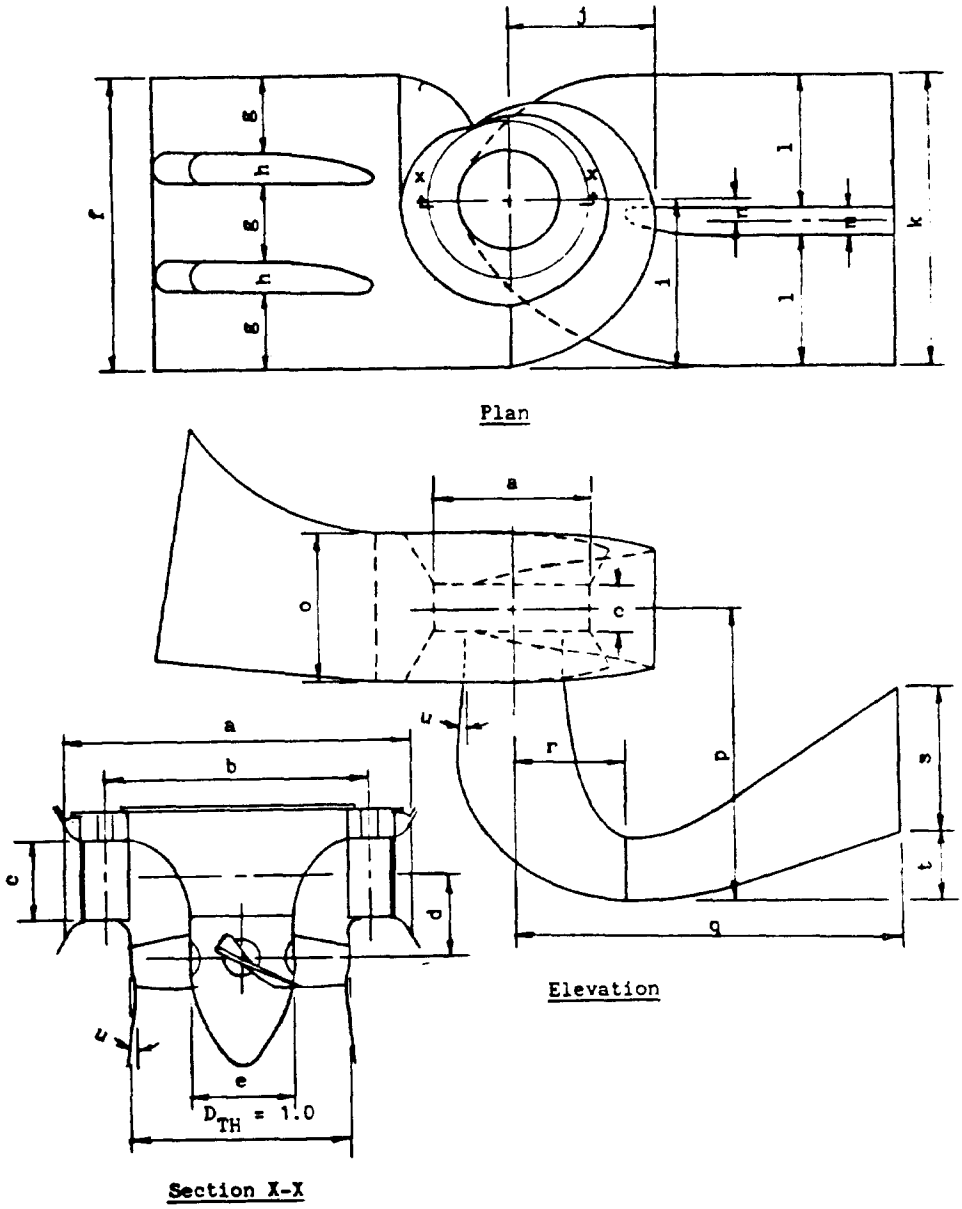

Figure 5. PROPELLER TYPE TURBINES - DIMENSIONS

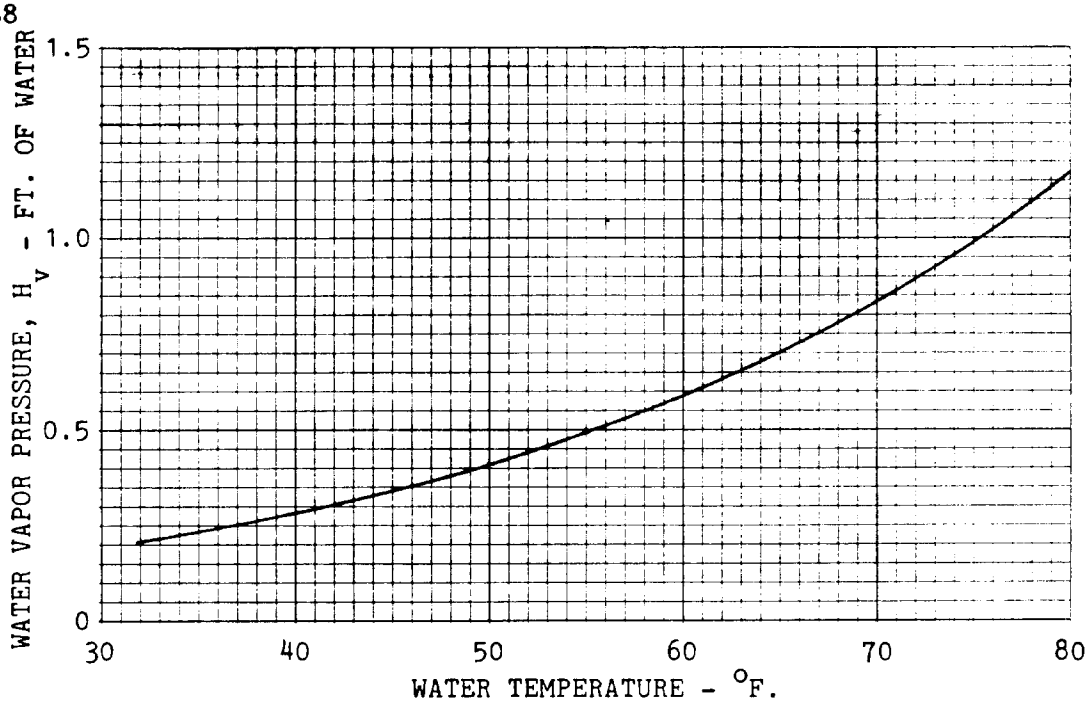

Figure 6(a). WATER VAPOR PRESSURE vs. WATER TEMPERATURE

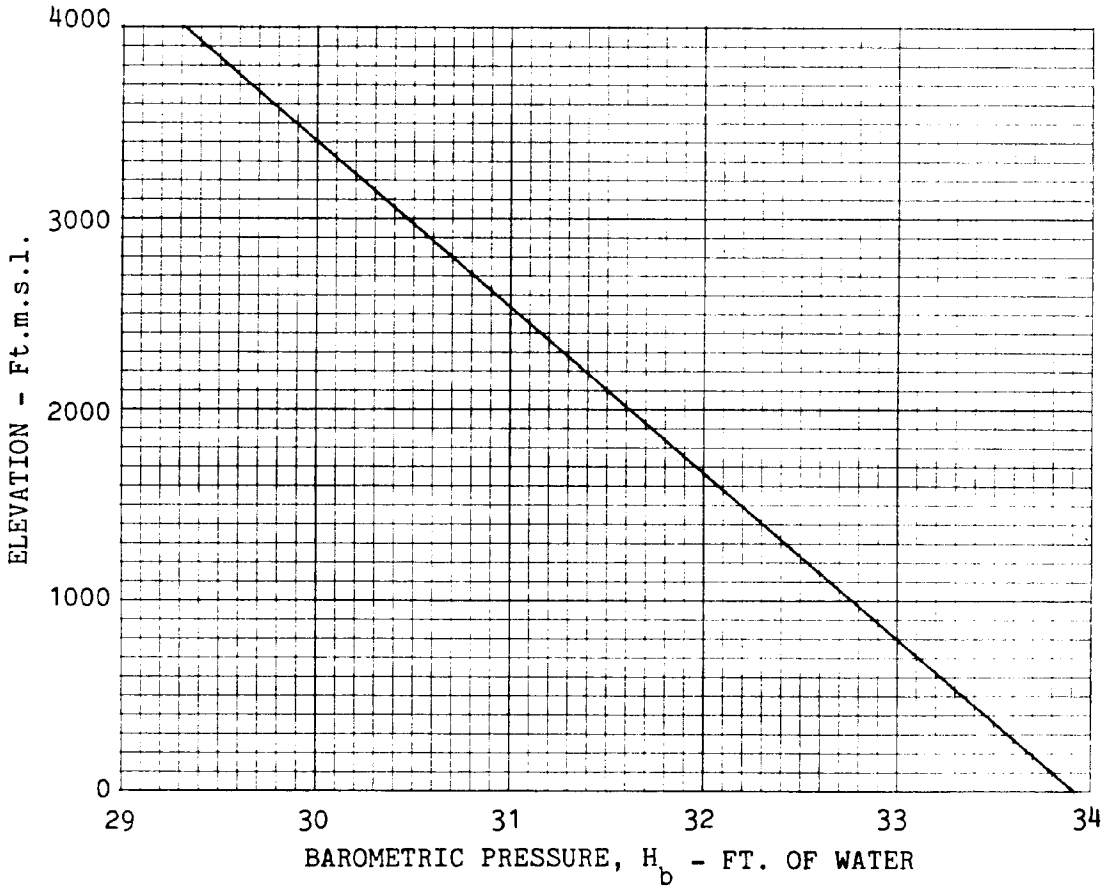

Figure 6(b). BAROMETRIC PRESSURE vs. ELEVATION

TABLE 1

FRANCIS TYPE TURBINES

DATA AND DIMENSIONAL RATIOS - D_{TH} = 1.0

(Refer to Fig. 4)

Fig. No.	F1	F2	F3	F4	F5	F6	F7	F8	(1)
N_s	27.2	34.3	37.2	44.7	50.6	63.1	65.0	80.0	42.8
vanes	22	20	24		20	20	24	10	20
gates	22	20	24	24	20	20	24	20	20
buckets	14	16	15	18	15	15	13	15	17
D_1	1.207	1.064	1.011	0.976	0.920	0.883	1.008	0.859	1.056
$D_2 = D_{TH}$	12"	12.09"	12"	11"	12.52"	12"	13"	13.57"	12"
D_3	1.000	1.000	1.000	1.000	1.018	1.083	1.054	1.136	1.000
a	1.895	1.698	1.498		1.518	1.698	1.590	1.639	1.715
b	1.385	1.256	1.171	1.172	1.150	1.271	1.194	1.217	1.266
c	0.184	0.177	0.231	0.254	0.290	0.333	0.299	0.429	0.160
d	0.320	0.343	0.323	0.352	0.377	0.431	0.429	0.434	0.287
e	1.883	1.803	1.705				1.856		1.793
f	1.738	1.656	1.560				1.773		1.657
g	1.569	1.476	1.384				1.572		1.501
h	1.313	1.198	1.106				1.243		1.274
i	1.440	1.307	1.281				1.254		1.315
j	0.976		1.179				1.155		1.000
k	1.728		2.072				1.933		0.953
l	0.864		0.742						
m	2.876	2.960	2.830		2.717	3.101	3.041	3.229	2.370
n	4.153	4.365	3.982		4.328	4.512	4.999	3.377	3.424
o	2.546	2.609	2.501		2.353	2.647	2.610	2.795	2.079
p	0.330	0.351	0.329		0.384	0.454	0.431	0.434	0.290
q	1.003	1.003	1.006		1.023	1.097	1.060	1.141	1.004
r	1.229	1.284	1.207		1.228	1.626	1.500	1.483	1.260
s					0.747				
t	4°	4.53°	4.68°		4.5°	7°±	6.5°		
u	1.156	1.094	1.281		1.427	1.260	1.244	1.061	0.920
v	0	0.261	0		0.593	0.479	0.305	0	
w	3.375	3.231	3.540		3.039	3.983		4.118	3.500
x	0.313	0.388*	0.337		0.266	0.303*		0.331	0.380

* two piers (1) other designs

TABLE 2

FRANCIS AND PROPELLER TYPE TURBINES
DATA AND DIMENSIONAL RATIOS - D_{TH} = 1.0

(Refer to Fig. 4)

							Propeller Type		
Fig. No.	(1)	(1)	(1)	(1)			FB3	F(1)	K(1)
N_s	48	50.8	57.6	65.2					
vanes	23	20	20	10			(see table 4, column 3 for other data)	(see table 5, column 5 for other data)	(see table 5, column 4 for other data)
gates	24	20	20	20					
buckets	13	17	15	15					
D_1	1.060	0.935	0.968	0.807					
$D_2 = D_{TH}$	13.72"	12.52"	15.75"	14.87"					
D_3	1.000	1.018	1.022	1.081					
a	1.600	1.518	1.542	1.580					
b	1.239	1.150	1.164	1.190					
c	0.267	0.290	0.317	0.403					
d	0.402	0.377	0.399	0.441					
e	1.797						2.199	2.174	1.998
f	1.636						1.989	1.962	1.796
g	1.448						1.715	1.708	1.553
h	1.179	(open flume)		(open flume)				1.305	1.160
i	1.273						1.523	1.458	1.333
j	1.205		1.310				1.587	1.467	1.377
k	1.386		1.577				2.215	1.620	
l									
m	3.117	2.711	2.754	2.646					
n	5.122	4.328	4.054	5.867					
o	2.712	2.333	2.355	2.201					
p	0.404	0.379	0.399	0.445					
q	1.004	1.023	1.024	1.084					
r	1.536	1.228	1.270	1.831					
s									
t	6.9°	4.5°	5.3°	7.6°					
u	1.276	1.238	1.095	1.149					
v	0.313	0.593	0.522	0					
w	3.272	3.039	3.860	3.307					
x	0.321*	0.266	0.328	0.304*					

* Two piers F = fixed blade; K = Kaplan
(1) other designs

TABLE 3

FRANCIS TYPE PUMP TURBINES
DATA AND DIMENSIONAL RATIOS - D_{TH} = 1.0

(Refer to Fig. 4)

Fig. No.	PT1	PT2	PT3	(3)	(3)	(3)	(3)		
N_{s_p} (1)	2150	3200	4700	2600	4500	2650	5100		
vanes	20	14	10	20	14	20	10		
gates	20	28	20	20	28	20	20		
buckets	7	6	6	6	6	6	6		
D_1	1.604	1.317	1.154	1.493	1.135	1.459	1.078		
$D_2 = D_{TH}$	9.995"	11.205"	13.000"	12.328"	12.000"	12.850"	12.030"		
D_3	1.000	1.000	1.000	1.000	1.000	1.000	1.000		
a	2.369	1.832	1.810	2.254	1.712	2.101	1.701		
b	1.876	1.479	1.423	1.785	1.346	1.712	1.342		
c	0.221	0.289	0.315	0.264	0.334	0.253	0.336		
d	0.434	0.399	0.385	0.433	0.385	0.409	0.392		
e	2.159	1.855	2.050	1.967	2.005	1.919	2.004		
f	2.010	1.703	1.887	1.831	1.829	1.784	1.829		
g	1.826	1.521	1.690	1.665	1.615	1.620	1.620		
h	1.570	1.257	1.394	1.435	1.316	1.388	1.325		
i	1.699	1.381	1.455	1.501	1.494	1.470	2.524		
j	1.039	1.071	1.212	0.923	1.351	0.921	1.214		
k	2.647	1.607	1.682	1.622	1.247	1.000	1.666		
l									
m	2.823	2.853	2.690	4.329	2.598	2.353	2.476		
n	10.525	3.893	3.700	5.640	4.610	4.747	3.698		
o	2.382	2.473	2.286	3.863	2.209	1.940	2.035		
p	0.441	0.380	0.404	0.465	0.389	0.413	0.441		
q	1.000	1.000	1.000	1.000	1.000	1.000	1.000		
r	1.299	1.284	1.183		1.173	1.118	1.240		
s			0.638	(2)		0.600			
t	7°	10°	7°	6°	7.4°	7°			
u	2.162	1.238	1.009	1.615	1.507	1.403	1.012		
v	1.941	0.555	0.404	0.470	0.623	0.903	0.389		
w	3.838	3.094	3.630	1.615	3.429	3.600			
x	0.485	0.309*	0.269*	(2)	0.312*	0.424*			

(1) Gpm units at $e_{max.}$; (2) No pier, as horizontal leg is circular.

* Two piers ; (3) other designs

TABLE 4

PROPELLER TYPE TURBINES

DATA AND DIMENSIONAL RATIOS - D_{TH} = 1.0

(Refer to Fig. 5)

Fig. No.	FB1	FB2	FB3	K1	K2	K3	K (1)	F-27° (1)	F-30° (1)
vanes	10	24	20	10	20	20	10	24	24
gates	20	24	20	20	20	20	20	24	24
blades	4	5	6	4	5	6	4	5	5
D_{TH}-model	12.44"	12"	12.08"	12.44"	12.51"	12"	12.44"	12"	12"
a	1.571	1.443	1.542	1.578	1.501	1.567	1.571	1.477	1.443
b	1.194	1.148	1.192	1.193	1.151	1.200	1.194	1.178	1.148
c	0.482	0.394	0.404	0.482	0.390	0.406	0.482	0.406	0.394
d	0.427	0.367	0.365	0.427	0.370	0.368	0.422	0.368	0.367
e	0.327	0.350	0.327	0.327	0.400	0.440	0.360	0.390	0.350
f	3.000	2.911	(See Table 2) (See Fig. 4)			3.171	3.062		2.911
g	0.803	0.787				0.857	0.855		0.787
h	0.296	0.275				0.300	0.248		0.275
i	1.727	1.780				1.854	1.800		1.780
j	1.482	1.318				1.515	1.467		1.318
k	3.000	2.912	3.261	3.060	3.127	3.171	3.060	3.307	2.912
l	0.818	1.338	1.415	1.406	0.875	1.457	0.855	0.889	1.338
m	0.273*	0.236	0.431	0.248	0.251*	0.257	0.248*	0.321*	0.236
n	0.227	0.325				0.268	0.269		0.325
o	1.566	1.534				1.671			1.534
p	2.773	2.790	2.791	3.020	2.907	3.030	2.780	2.936	2.790
q	4.500	3.627	3.730	3.900	4.391	3.930	4.060	4.529	3.627
r	1.174	1.130	1.231	1.170	1.323	1.220	1.280	1.303	1.130
s	1.424	1.102	1.139	1.160	1.273	1.200	1.240	1.333	1.102
t	0.758	0.659	0.528	0.690	0.882	0.720	0.500	0.962	0.659
u	7.9°	11°	8.1°	5.5°	7.9°	7°	8.1°	7°	7°

* two piers; F = fixed blade; K = Kaplan
(1) other designs

TABLE 5

PROPELLER TYPE TURBINES

DATA AND DIMENSIONAL RATIOS - D_{TH} = 1.0

(Refer to Fig. 5)

	(1)	(1)	(1)	(1)	(1)				
Ident.	K	F-29.6°	K	K	F				
vanes	20	24	24	24	20				
gates	20	24	24	24	20				
blades	5	6	6	6	8				
D_{TH}-model	12"	12"	12"	12"	12"				
a	1.574	1.443	1.443	1.443	1.580				
b	1.200	1.148	1.148	1.148	1.200				
c	0.406	0.394	0.446	0.446	0.409				
d	0.368	0.367	0.394	0.394	0.551				
e		0.350	0.440	0.440					
f		2.911	2.911	(See Table 2 (See Fig. 4)	(See Table 2 (See Fig. 4)				
g		0.787	0.787						
h		0.275	0.275						
i		1.780	1.780						
j		1.318	1.318						
k		2.912	2.912	2.892	3.394				
l		1.338	1.338	0.787	1.457				
m		0.236	0.236	0.266*	0.480				
n		0.325	0.325						
o		1.534	1.534						
p	3.030	2.780	2.807	2.628	3.028				
q	3.930	3.627	3.627	4.063	4.414				
r	1.220	1.130	1.130		1.221				
s	1.200	1.102	1.102	1.137	1.326				
t	0.720	0.659	0.659	0.545	0.780				
u		7°	11°	4.6°	7°				

* two piers; F = fixed blade; K = Kaplan
(1) other designs