FOOTING DESIGN FOR SEISMIC LOADS
WALL A (WALL C SIM.)

18' PIER

TOTAL WALL OVERTURNING MOMENT = 2480 'K (P.16)

OVERTURNING MOMENT TO 18' PIER =

$\frac{R}{\Sigma R} \times 2480'^{K} = \frac{13.3}{35.6} \times 2480 = 927'^{K}$ (P.10)

SHEAR $V = 56.3^{K}$ (P.25)

OVERTURNING MOMENT @ BASE OF FTG.

$M_{OT} = 927'^{K} + 56.3^{K} \times 5' = 1209'^{K}$

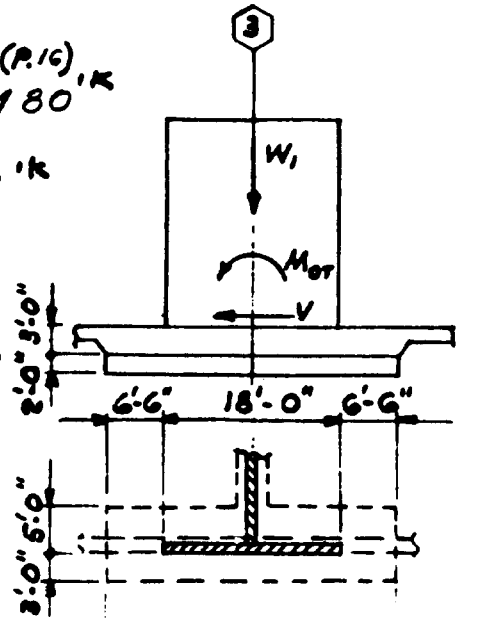

AREA = 8' × 31' = 248 □'

SEC. MOD = $\frac{8 \times 31^2}{6}$ = 1281 FT³

PLAN

WEIGHTS

W_1 = 58860 # (DEAD) (P.20)

W_1 = 4800 # (LIVE EXCL. ROOF L.L.) (P.20)

W_1 = 5761 #/□ × 4.17' TRIB = 24023 # (DEAD) } CROSS WALLS (P.19)

W_1 = 1600 #/□ × 4.17' TRIB = 6672 # (LIVE)

ΣW_1 (DEAD) = 82883 #

ΣW_1 (LIVE) = 11472 #

W_{FTG} = 2' × 150 PCF = 300 PSF

W_{SOIL} = 3' × 115 PCF = 345 PSF

SOIL PRESSURE	MAX.	MIN.
P/A (FTG + SOIL)	+645 PSF	+645 PSF
P/A (DEAD) $\frac{82883}{248}$	+ 334	+334
P/A (LIVE) $\frac{11472}{248}$	+ 46	
M/S (SEISMIC) $\frac{1209,000}{1281}$	+ 944	- 944
	+1969 PSF	+35 PSF
		NO UPLIFT

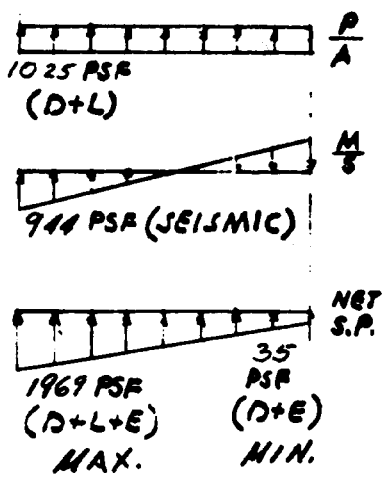

Figure D-1. Continued.

FOOTING DESIGN FOR SEISMIC LOADS
WALL A (WALL C SIM.)

9' PIER

(P.17)

TOTAL WALL OVERTURN MOMENT = 2480 'K

OVERTURN MOM. TO 9' PIER

$$\frac{R}{\Sigma R} \times 2480 = \frac{4.5}{35.6} \times 2480 = 313 \text{ 'K}$$

SHEAR V = 19.0K (P.25)

OVERTURN MOM. @ BASE OF FTG.

M_{OT} = 313 'K + 19.0K × 5' = 408 'K

AREA OF FTG. = 8' × 20' = 160 □'

SECTION MODULUS = $\frac{8 \times 20^2}{6}$ = 533 FT³

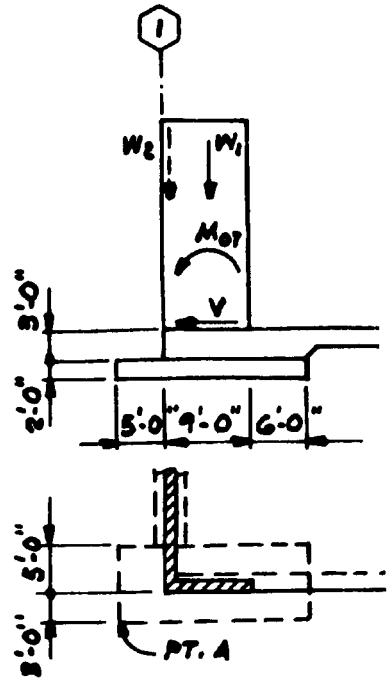

PLAN

WEIGHTS	×	DIST. TO PT. A	=	Wd
W_1 (DEAD) = 29430# (P.20)	×	9.5'	=	279585
W_1 (LIVE) = 2400# (P.20)	×	9.5'	=	22800
W_2 (DEAD) = 3684 #/' × 4.17' TRIB. = 15362#	×	5.42'	=	83264
W_2 (LIVE) = 800 #/' × 4.17' TRIB. = 3336#	×	5.42'	=	18081
$W_{FTG.}$ 2' × 150# × 8' × 20' = 48000#	×	10'	=	480000
W_{SOIL} 8' × 115# × 8' × 20' = 65200#	×	10'	=	552000

ΣW (DEAD) = 147992# $\quad \Sigma Wd$ (DEAD) = 1394849

ΣW (LIVE) = 5736# $\quad \Sigma Wd$ (LIVE) = 40881

ECCENTRICITY e (DEAD) = $\frac{1394849}{147992} - 10' = -.57'$

e (LIVE) = $\frac{40881}{5736} - 10' = 2.87'$

Figure D-1. Continued.

FOOTING DESIGN FOR SEISMIC LOADS

WALL A (WALL C SIM)

9' PIER (CONT.)

SOIL PRESSURE		MAX	MIN.
P/A (FTG + SOIL)	300# + 345#	= +645 PSF	+645
P/A (DEAD)	$\frac{29430 + 17814}{160}$	= +293	+293
P/A (LIVE)	$\frac{2400 + 3336}{160}$	= +36	
Pe/S (DEAD)	$\frac{150144 \times 0.63'}{533}$	= +177	-177
Pe/S (LIVE)	$\frac{5736 \times 2.87'}{533}$	= +81	
M_{OT}/S (SEISMIC)	$\frac{108,000}{533}$	= +765	-765
		1947 PSF < 3000 × 1⅓ OK	-1 UPLIFT. SMALL UPLIFT CONSIDERED OK, SINCE GR. BM. CAN OFFER SOME RESISTANCE

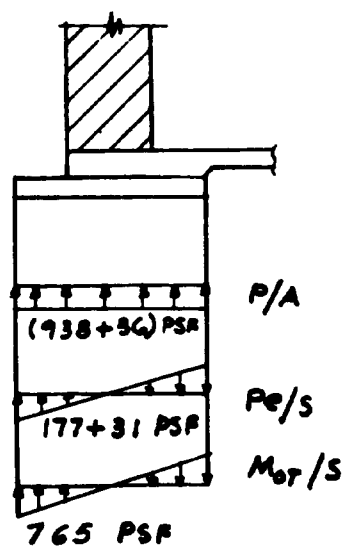

Figure D-1. Continued.

DESIGN OF ROOF DIAPHRAGM

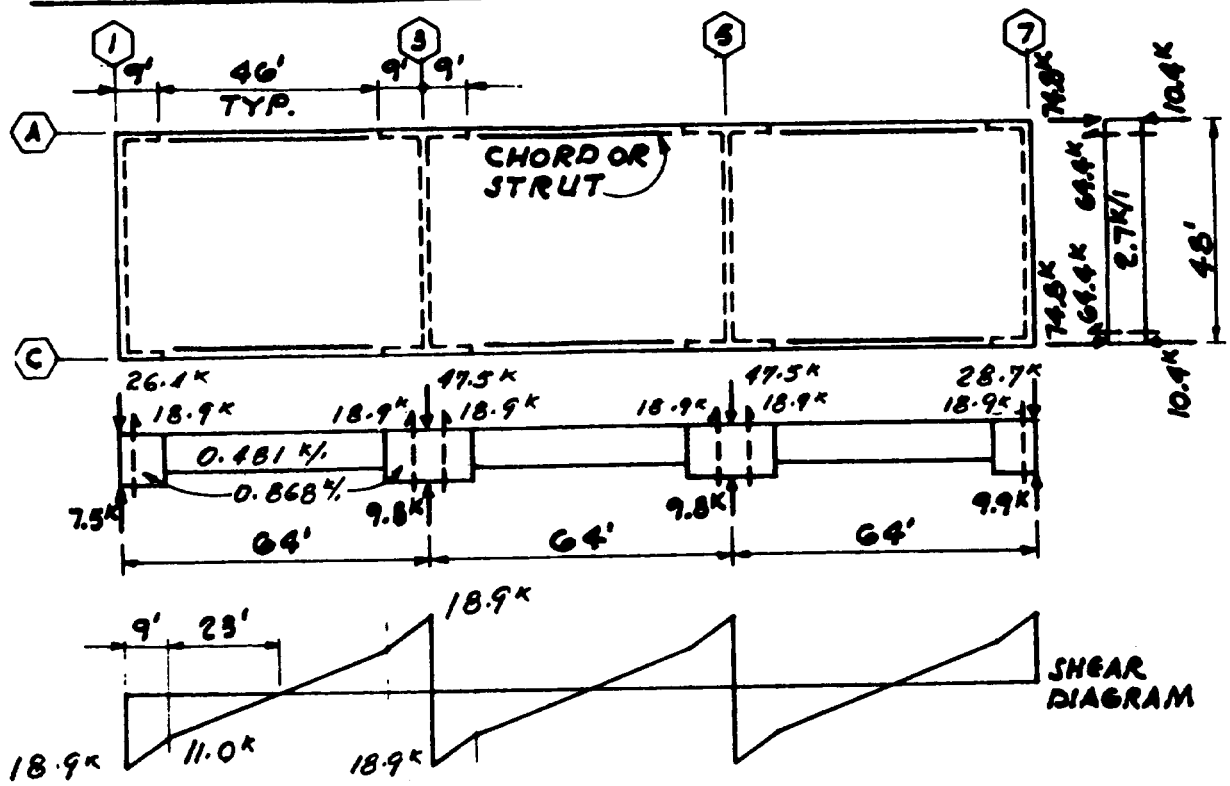

SEAOC FORMULA (1-11): $F_{px} = \left(\frac{F_t + \Sigma F_i}{\Sigma \omega_i}\right)\omega_{px}$

$= \left(\frac{0+150}{534}\right)\omega_{px} = 0.281\omega_{px}$

MIN. $F_{px} = 0.35ZI\omega_{px} = 0.14\omega_{px}$ WHERE $Z = 0.4$

MAX. F_{px} NEED NOT EXCEED $0.75ZI\omega_{px}$ $I = 1.0$

FROM DIAGRAM p,4, MULTIPLY ALL VALUES SHOWN @ 100% G BY $C_p = 0.281$

MAX. AVE. DIAPH. SHEAR: (N-S) $\frac{18{,}900^{\#}}{48'} = 394\ \#/'$

(E-W) $\frac{64400^{\#}}{192'} = 335\ \#/'$

USE 1½" STEEL DECK 20 GA. SPAN 6'-0" ALLOW SHR = 470#/'
5 END WELDS & BUTTON PUNCH @ 24" O.C. (FIG. 5-19)

Figure D-1. Continued.

DESIGN OF ROOF DIAPHRAGM - CONT.

MAXIMUM MOMENT $= \left(\frac{18.9+11.0}{2}\right)9' + \left(11.0 \times \frac{23}{2}\right) = 261'^{K}$

CHORD STRESS (N-S) $= \frac{M}{D} = \frac{261}{47.2'} = 5.5^{K}$

CHORD STRESS (E-W) $= \frac{VL}{4D} = \frac{64.4 \times 48}{4 \times 191.58} = 4^{K}$

DESIGN CHORD FOR TENSION OR COMPR OF 5.5^{K}

DESIGN FOR CHORD REBAR IN WALLS 1 & 7

$A_s = \frac{1.4T}{\phi f_y} = \frac{1.4 \times 4^{K}}{0.9 \times 40} = 0.16^{\square''}$

USE 2-#5

STRUT DESIGN (E-W): IN THE EAST-WEST DIRECTION, THE CHORD BEAMS ALONG (A) & (C) ACT AS COLLECTOR OR DRAG STRUTS. BECAUSE OF WALL RIGIDITIES, DIAPH. SHR. IS TAKEN THRU THE STRUT IN TENSION & COMPR. IN PROPORTION TO THE WALL RIGIDITIES.

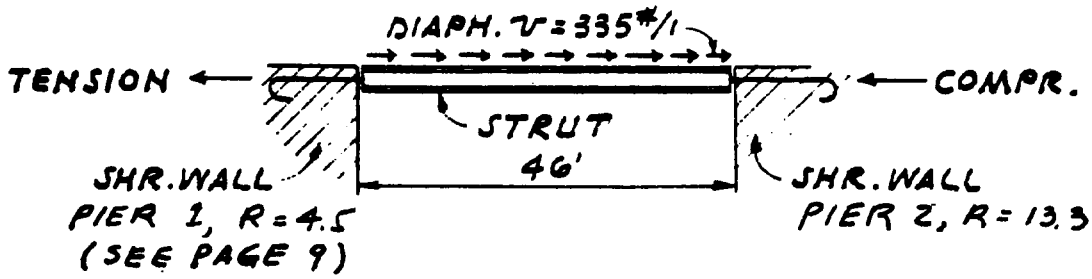

∴ DESIGN STRUT FOR:

$C = T = 335\#/' \times 46' \text{ LENGTH} \times \frac{13.3}{17.8} = 11{,}514\#$

Figure D-1. Continued.

DESIGN OF 2ND FLOOR DIAPHRAGM

THE CONCRETE DIAPHRAGM SHALL BE DESIGNED TO SATISFY SEAOC FORM. (1-11), BUT SHALL NOT BE LESS THAN THAT REQUIRED TO TRANSFER SHEAR ON P. 15.

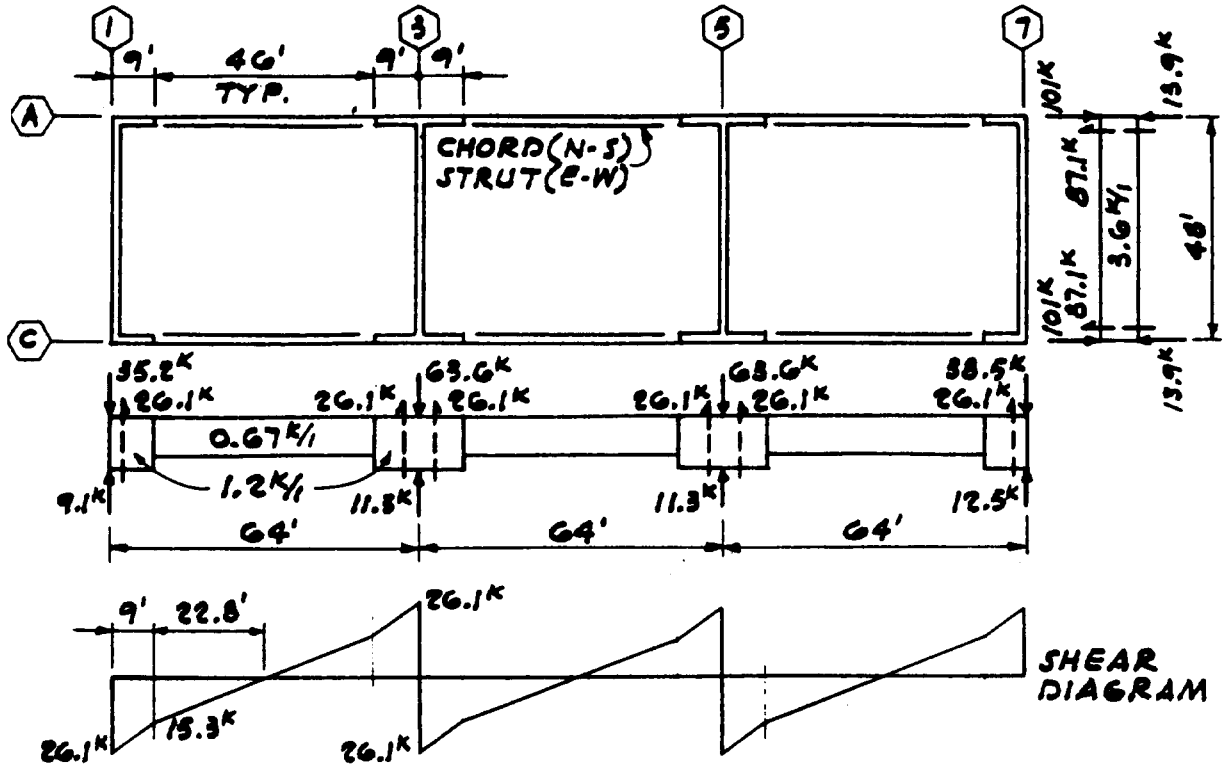

SEAOC (1-11) : $F_{px} = \left(\frac{F_t + \Sigma F_i}{\Sigma \omega_i}\right) \omega_{px}$

$= \left(\frac{0+300}{1614}\right) \omega_{px} = 0.186\, \omega_{px}$ (NORTH-SOUTH & EAST-WEST) (P.6)

MIN. $F_{px} = 0.14\, \omega_{px}$

FROM DIAGRAM P.5, MULTIPLY ALL VALUES SHOWN @ 100 G BY $C_p = 0.186$.

MAX. AVG. DIAPH. SHEAR : (N-S) $\frac{26100^{\#}}{48'} = 544^{\#}/1$

(E-W) $\frac{87100^{\#}}{192} = 454^{\#}/1$

USE 2½" CONC. ON 16-18 GA. STEEL DECK ALLOW. $q = 2760^{\#}/1$
(EQ. 5-27 & FIG 5-22, 3 of 3) $f_c' = 3{,}000$ PSI

Figure D-1. Continued.

DESIGN OF 2ND FLOOR DIAPHRAGM (CONT.)

$$\text{MAX. MOMENT} = \left(\frac{26.3^K + 15.5^K}{2}\right) 9' + \left(15.5^K \times \frac{23'}{2}\right) = 366'^K$$

$$\text{CHORD STRESS (N-S)} = \frac{M}{D} = \frac{366'^K}{47.2} = 7.8^K$$

DESIGN CHORD FOR TENSION OR COMPR. OF 7.8^K

$$\text{CHORD STRESS (E-W)} = \frac{VL}{4D} = \frac{84.5^K \times 48'}{4 \times 191.58} = 5.3^K$$

DESIGN FOR CHORD REBAR IN WALLS 1 & 7

$$A_s = \frac{1.4T}{\phi f_y} = \frac{1.4 \times 5.3}{0.9 \times 40} = 0.21 \ \square''$$

USE 2-#5

STRUT DESIGN (E-W):

DESIGN STRUT FOR TENSION & COMP. OF $T = C = 366^{\#}/' \times \frac{46'}{2} = 8420^{\#}$

CHECK STRESSES FOR SHEAR P.16

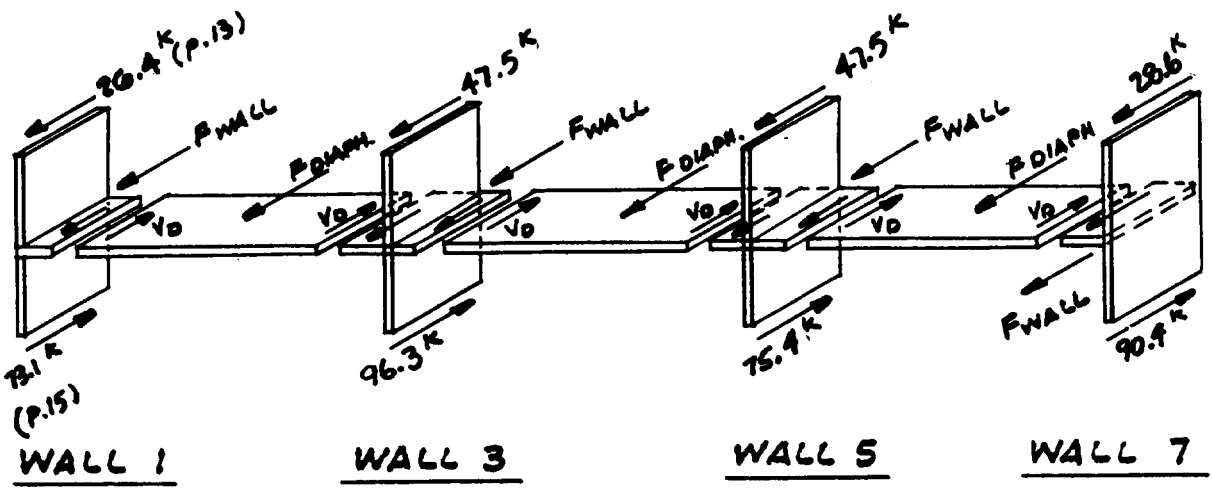

V_D = DIAPHRAGM SHEAR

F_{WALL} = SEISMIC FORCE FROM WT OF TRIBUTARY WALL

F_{DIAPH} = SEISMIC FORCE FROM WT OF DIAPHRAGM

Figure D-1. Continued.

DESIGN OF 2ND FLOOR DIAPH. (CONT)

NORTH-SOUTH

WALL 1

$F_{WALL} = 0.183 \times \text{TRIB. WALL WT.}$

$= \underset{\text{(p.6)}}{0.183} \times \underset{\text{(p.5)}}{48.6^k} = 9^k$

p.42 { SHEAR IN WALL ABOVE DIAPH. = 26.4^k
SHEAR IN WALL BELOW DIAPH. = 73.1^k

DIAPH. SHR $V_D = 73.1^k - 9^k - 26.4^k = 37.7^k$

SHEAR STRESS $v = \dfrac{37{,}700}{48'} = 785^{\#/'}$ OK

WALL 3

$F_{WALL} = 0.183 \times \overset{\text{(p.5)}}{60.6^k} = 11.1^k$

SHEAR IN WALL ABOVE DIAPH. = 47.5^k

SHEAR IN WALL BELOW DIAPH. = 96.3^k

$F_{DIAPH} = 0.183\left[3.58^{k/'} \times 46' + \underset{\text{(p.5)}}{6.34^{k/'}} \times 18'\right] = 51.0^k$

DIAPH SHEAR V_D (WEST) $= 51.0^k - 37.7^k = 13.3^k$

DIAPH SHEAR V_D (EAST) $= 96.3^k - 13.3^k - 47.5^k - 11.1^k = 24.4^k$

SHEAR STRESS $= \dfrac{24{,}400^{\#}}{(48)} = 508^{\#/'}$ OK

WALL 7

$F_{WALL} = 0.183 \times \overset{\text{(p.5)}}{66.6^k} = 12.2^k$

SHEAR IN WALL ABOVE DIAPH. = 28.6^k

SHEAR IN WALL BELOW DIAPH. = 90.4^k

DIAPH SHR $V_D = 90.4^k - 28.6^k - 12.2^k = 49.6^k$

SHEAR STRESS $= \dfrac{49600^{\#}}{48'} = 1033^{\#/'}$ OK

Figure D-1. Continued.

DESIGN OF 2ND. FLOOR DIAPH. (CONT.)

NORTH-SOUTH

WALL 5

$F_{WALL} = 0.183 \times 60.6^k = 11.1^k$

SHEAR IN WALL ABOVE DIAPH. $= 47.5^k$ (p.15)

SHEAR IN WALL BELOW DIAPH. $= 75.4^k$ (p.16)

$F_{DIAPH} = 0.183\left[3.58^{k/'} \times 46' + 6.34^{k/'} \times 18'\right] = 51.0^k$

DIAPH SHR V_D(EAST) $= 51.0^k - 49.6^k = 1.4^k$

DIAPH SHR V_D(WEST) $= 75.4^k - 1.4^k - 11.1^k - 47.5^k - 51.0^k$

$= -35.6^k$

$$\text{SHEAR STRESS} = \frac{35{,}600}{(48' - 12')} = 989\ \#/' \quad \text{OK}$$

STAIR OP'G.

EAST-WEST

WALL A & C

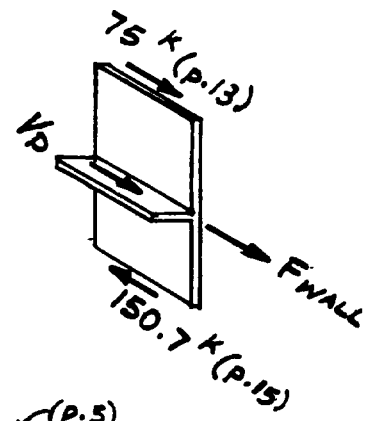

$F_{WALL} = 0.183$ (p.6) $\times 74.4^k$ (p.5) $= 13.6^k$

SHEAR IN WALL ABOVE DIAPH. $= 75^k$

SHEAR IN WALL BELOW DIAPH. $= 150.7^k$

DIAPH SHR $V_D = 150.7 - 75^k - 13.6^k = 62.1$

$$\text{SHEAR STRESS} = \frac{62{,}100}{192} = 323\ \#/' \quad \text{OK}$$

Figure D-1. Continued.

DIAPHRAGM DEFLECTION

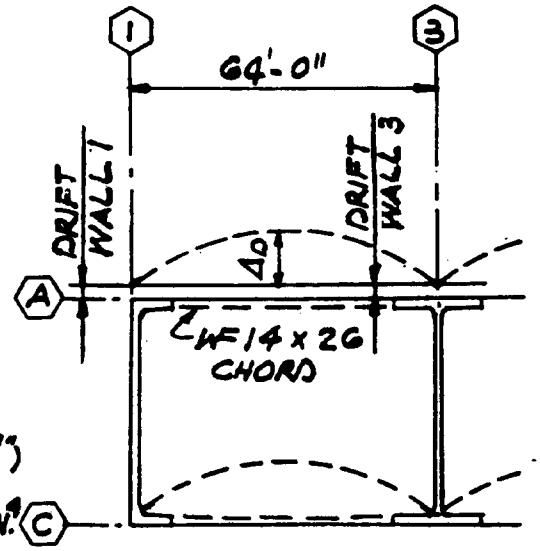

CHECK DEFLECTION OF ROOF DIAPH. BETWEEN GRID 1 & 3

$\Delta_D = \Delta_{\text{BENDING OF FLANGE}} + \Delta_{\text{SHEAR IN WEB}}$

ASSUME Δ_B IS DEFLECTION OF A SIMPLY SUPPORTED DIAPH.

$$\Delta_B = \frac{5}{384} \cdot \frac{wl^4}{EI}$$

WHERE I IS ASSUMED TO BE BASED ON WF14 x 26 CHORD (A = 7.67 in²)

$$I = 2 \times 7.67^{in^2} \times \left(\frac{47.2'' \times 12''/'}{2}\right)^2 = 1{,}230{,}300 \text{ IN.}^4$$

(p. 39)

$$\Delta_B = \frac{5 \times 481^{\#}/' \times 64^4 \times 1728}{384 \times 29 \times 10^6 \times 1230300} = 0.005''$$

(p. 39)

AVG. SHEAR/F OF DIAPH $q_{AVG.} = \dfrac{18.9 + 0}{2 \times 48} = 0.197$ K/'

FLEXIBILITY $F = 16 + 26.8R$ (SEE FIG. 5-19)

WHERE $R = 6/18 = 0.33$

$F = 16 + 26.8(.33) = 24.8$

DIAPH DEFLECTION FROM SHEAR IN WEB:

$$\Delta_W = \frac{q_{AVG.} L_1 F}{10^6} = \frac{197 \times 32 \times 24.8}{10^6} = 0.156'' \text{ (Equ. 5-2)}$$

TOTAL DIAPH DEFLECTION $\Delta_D = \Delta_B + \Delta_W$

$= 0.005 + .156 = 0.161''$

DRIFT OF SHEAR WALL 1 $\Delta_1 = 0.037'' \times \dfrac{10''}{12''} \times \dfrac{26.4}{1000^K} \times \dfrac{3}{3.6} = 0.00070''$

(p. 9) (p. 13)

(ASSUMES FIXED BASE)

ADJUSTMENT TO FIG 6-4 FOR THICKNESS, FORCE & MODU. ELAS.

DRIFT OF SHEAR WALL 3 $\Delta_3 = \left(\dfrac{1}{38.1}\right) \times \dfrac{10''}{12} \times \dfrac{47.5}{1000} \times \dfrac{3}{3.6} = 0.00087''$

ALLOWABLE DRIFT $= 0.005H = 0.005 \times 12'_{AVG} \times 12 = 0.72'' \rangle 0.00087$

$0.04/R_w = 0.04/6 = 0.0067$ (SEAOC 1E8a)

Figure D-1. Continued.

DIAPHRAGM DEFLECTION

THE AVERAGE DRIFT OF WALL (1) & (3) $= \dfrac{0.00070 + 0.00084}{2} = 0.0008''$

TOTAL RELATIVE DISPLACEMENT OF ROOF DIAPH W/RESPECT TO THE 2ND FLOOR $= 0.161'' + 0.0008$
$= 0.162''$

THE WALL ELEMENT MUST BE DESIGNED TO ACCOMODATE THIS RELATIVE DISPLACEMENT. IN THIS EXAMPLE PROBLEM, THE WALL ELEMENT IS A RELATIVELY FLEXIBLE CURTAIN WALL WHICH PRESENTS NO PROBLEM. THE DEFLECTION CACULATIONS HAVE BEEN INCLUDED PRIMARILY TO ILLUSTRATE THE PROCEDURE IN CASES WHERE BRITTLE WALLS (MASONRY OR CONC.) OCCUR.

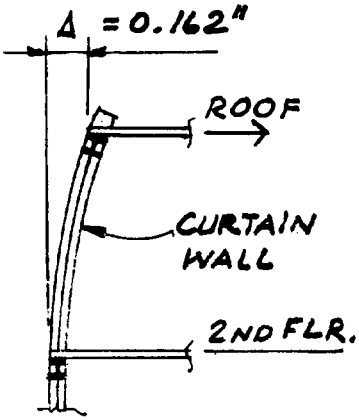

Figure D-1. Continued.

DESIGN EXAMPLE D-2

Concrete Special Moment Resisting Frame

Description of Structure. A three-story Administration Building with a ductile moment resisting space frame in reinforced concrete without shear walls, using non-bearing, non-shear, exterior walls (skin) of flexible insulated metal panels. The structural concept is illustrated on Sheet 3.

Construction Outline.

Roof:
- Built-up 5-ply.
- Concrete joists and girders.
- Suspended ceiling.

2nd & 3rd Floors:
- Concrete joists and girders.
- Asphalt tile.
- Suspended ceiling.

1st Floor:
- Concrete slab-on-grade.

Exterior Walls:
- Non-bearing, non-shear, insulated metal panels.

Partitions:
- Non-structural removable drywall.

Design Concept. Since the structure is a ductile moment resisting space frame with the capacity to resist the total required lateral force, the R_w-factor is 12. Seismic Zone 4.

Discussion. Inasmuch as the design requirements for concrete ductile moment-resisting frames are complex, a detailed design procedure is given on p. 2 of the example.

Loads.

Roof:

5-ply roofing	6.0
1" insulation	1.5
Conc. frame	115.0
Ceiling	5.0
Miscellaneous	3.5
Dead Load	131 psf
Add for seismic loading:	
Partitions	10
	141 psf
Live Load	20 psf

Floors:

Floor covering	1
Conc. frame	129
Partitions	20
Ceiling	5
Mech. & Elect.	5
Miscellaneous	4
Dead Load	164 psf
Live Load	50 psf
Exterior Wall	11 psf

Materials.

Concrete: $f'_c = 4$ ksi $E_c = 3.6 \times 10^6$ psi

Steel: $f_y = 60{,}000$ psi

Figure D-2. Concrete ductile moment resisting space frame.

DESIGN PROCEDURE

	Sheet No.
Building System and Loads	1-3
Member Sizes	4
Building Weights	5,6
Base Shear	6
Story Forces and Overturning	7
Relative Rigidities of Frames	7
Distribution of Forces to Frames	8
Frame Analysis	9,10
Design Forces for Beams -- PROCEDURE	11
Forces	12
Longitudinal Reinforcement Req'd, Actual M_u, M_p	13
Transverse Reinforcement	14
Column Forces	15
Slenderness, Magnified M (Req'd M_u)	16
Capacity Req'd, Actual M_u, Col. M_u > Beam M_u, M_p	17
Shear Based on M_p's	18
Special Transverse Reinforcement	19-21
Beam-Column Joint	22-24
Summary of Design	25

Figure D-2. Continued.

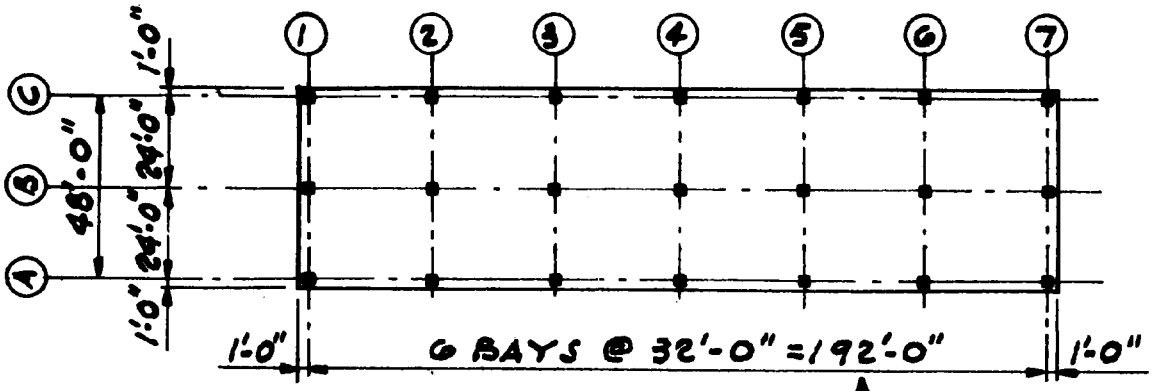

PLAN

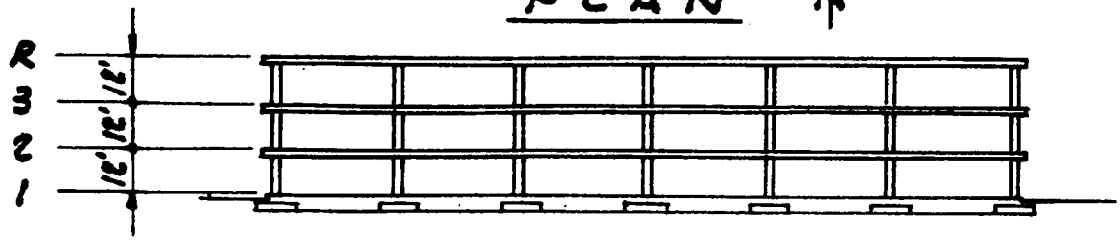

NORTH & SOUTH ELEVATIONS
(SECTION AT LINE B SIMILAR)

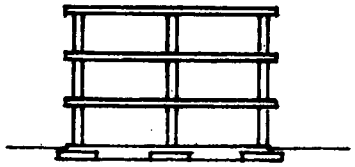

EAST & WEST ELEVATIONS
(TRANSVERSE SECTIONS SIMILAR)

SCOPE OF DESIGN EXAMPLE

1. CALCULATION OF LATERAL FORCES ON BLDG. AND DISTRIBUTION TO FRAME
2. TABULATION OF THE RESULTS OF ANALYSIS OF THE FRAME ON LINE B
3. DESIGN OF SECOND FLOOR BEAMS BETWEEN 1 AND 2
4. DESIGN OF COLUMNS B1 & B2

Figure D-2. Continued.

DISCUSSION OF MEMBER SIZES

1. The example is intended to illustrate the procedure for designing a concrete ductile moment resisting frame. The design work is complex, and several trials are required in order to achieve the optimum design.

2. The building configuration was arbitrarily made the same as that of the steel frame of example D-3.

3. Frame B will be analyzed in this example and members between grid lines 1 & 2 will be designed to illustrate the design procedure.

   a. The section of beam & col. sizes is a trial and error procedure. Architectural considerations, limitations on dimensions (Fig. 8-2), space for bar placement, allowable stresses of concrete and steel, etc., can affect the member sizes.

   b. The beam was assumed to be 28" x 30", and the required reinforcing and the actual ultimate moment capacity were calculated.

   c. For the min or max Pu and the required M_p (on the basis of column M_p > beam M_p), a suitable column was estimated to be 24" x 24", with 12 - #10 or 10 - #11. (Note: Biaxial loading must be considered for column forces in the transverse direction:)

4. Results of a frame analysis are given, and the example continues with representative beam, column and joint design, using sizes and design forces from this analysis. The frame analysis itself is not shown since values can be obtained by computer or by any of the various approximate methods.

Figure D-2. Continued.

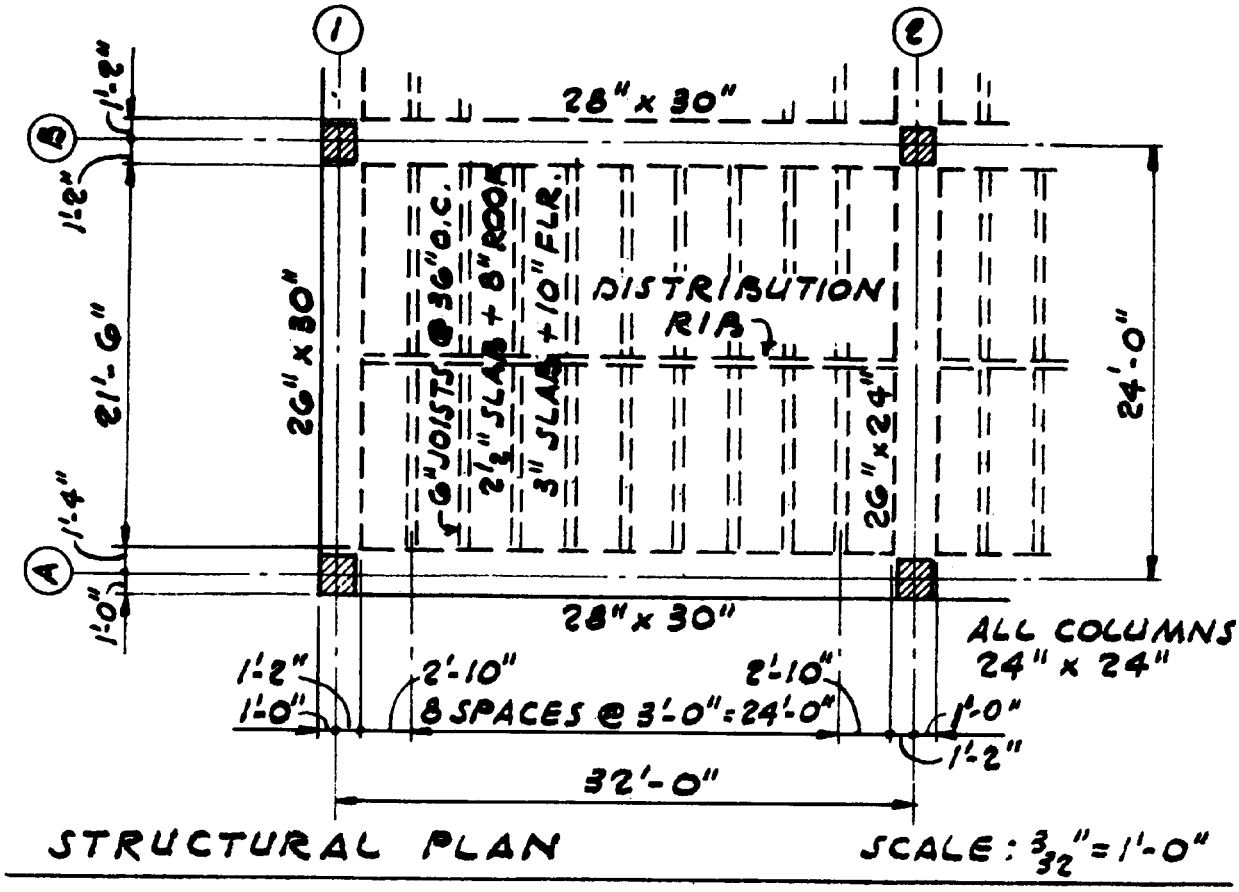

WEIGHT OF CONCRETE IN TYPICAL 32' x 50' BAY

ROOF:

LONGIT. GIRDERS	3 x 2.33' x 2.5' x 32' x 0.150	= 84.0
TRANSV. BEAM	2 x 2.17 x 2.0' x 21.5 x 0.150	= 28.0
JOISTS	2 x 29.67 x 21.5 x 0.050	= 63.8
COLUMNS 24x24	3 x (9.5/2) x (2.0)² x 0.150	= 8.6
		184.4 K

$$w_R = \frac{184{,}400^{\#}}{32.0' \times 50.0'} = 115 \text{ PSF}$$

FLOOR:

$$84.0 + 28.0 + \frac{61}{50}(63.8) + 2(8.6) = 207^{K} \text{ OR } 129 \text{ PSF}$$

Figure D-2. Continued.

BUILDING WEIGHTS

AT ROOF LEVEL

ROOF DL = (0.131 + 0.010) KSF × 50′ × 194′ = 1368 K

EXT. WALLS @ 10 PSF

N & S 2 × 194′ × $\left(\frac{12'}{2} + \overset{\text{PARAPET}}{1'}\right)$ × 0.011 = 30 K

E & W 2 × 50′ × 7 × 0.011 = 8

w_R = 1406 K

AT FLOOR LEVEL

FLOOR DL = 0.164 × 50′ × 194′ = 1591 K

EXT. WALLS

N & S (12′/7′) × 30 = 51

E & W (12′/7′) × 8 = 14

$w_3 = w_2$ = 1656 K

TOTAL W = Σw = 1406 + 1656 + 1656 = 4718 K

BASE SHEAR

$Z = 0.4$ $\quad I = 1.0$ $\quad R_w = 12$

$C_t = 0.030$ $\quad h_n = 36.0'$

$T = C_t (h_n)^{3/4} = 0.030\,(36.0)^{3/4} = 0.441$

$C = \frac{1.25S}{T^{2/3}} = \frac{1.25 \times 1.5}{(0.441)^{2/3}} = 3.24$, USE 2.75

$V = \frac{ZIC}{R_w} W = \frac{0.4 \times 1.0 \times 2.75}{12} W = 0.0917W$

$= 0.0917 \times 4718 = 432^K$

Figure D-2. Continued.

STORY FORCES & OVERTURNING

LEVEL	h_x	Δh	w_x	$w_x h_x$	$\frac{wh}{\Sigma wh}$	F_x	V_x	$V_x h$	M
R	36'		1406	50,616	.46	200K			
		12'					200	2400	
3	24'		1656	39,744	.36	156K			2400
		12'					356	4272	
2	12'		1656	19,872	.18	76K			6672
		12'					432	5184	
			4718	110,232	1.00	432K			11,856K
			W			V			

RELATIVE RIGIDITIES OF FRAMES

THE FOLLOWING ASSUMPTIONS ARE MADE IN ORDER TO ESTIMATE THE FORCES TO BE APPLIED IN THE FRAME ANALYSIS.

LONGITUDINAL FRAMES

A, B & C 5 COLUMNS @ 1 = 5.0
2 COLUMNS @ 3/4 = 1.5 } R = 6.5

$\Sigma R = 3 \times 6.5 = \underline{19.5}$

TRANSVERSE FRAMES

LINES 1 & 7 1 COLUMN @ 1 + 2 @ 3/4 = 2.5
ADJUST FOR SHORTER BEAMS = 32'/24' = 1.33;
SAY 1.16* x 2.5 = 2.9
ADJUST FOR NARROW BEAMS = (26"/28") = 0.928;
SAY 0.94* x 2.9 = 2.7

LINES 2-6 1 COLUMN @ 1 + 2 @ 3/4 = 2.5
ADJUST FOR SHORTER BEAMS 1.16* x 2.5 = 2.9
ADJUST FOR SHALLOWER BEAMS = $(24/30)^3$ = 0.51;
SAY 0.75* x 2.9 = 2.2

$\Sigma R = (2 \times 2.7) + (5 \times 2.2) = \underline{16.4}$

* NOTE: Effects of Joint rotation are not proportional to beam stiffness

Figure D-2. Continued.

DISTRIBUTION OF FORCES TO FRAMES

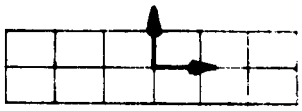

UNIT FORCE, $F = 1.00^K$

FRAME	REL R	$\frac{R}{\Sigma R}$	DIRECT FORCE	d	d^2	Rd^2	$\frac{Rd^2}{\Sigma Rd^2}$	TORSION FORCE	DIRECT + TORSION
1	2.7	.165	.165	+96	9216	24,883	.312	+.031	.196
2	2.2	.134	.134	+64	4096	9,011	.113	+.017	.151
3	2.2	.134	.134	+32	1024	2,253	.028	+.008	.142
4	2.2	.134	.134	0	0	0	0		.134
5	2.2	.134	.134	-32	1024	2,253	.028	-.008	.126
6	2.2	.134	.134	-64	4096	9,011	.113	-.017	.117
7	2.7	.165	.165	-96	9216	24,883	.312	-.031	.134
	16.4	1.000	1.000 TRANSV.					SEE NOTE	
A	6.5	.333	.333	+24	576	3,744	.047	+.005	.338
B	6.6	.334	.334	0	0	0	0	0	.334
C	6.5	.333	.333	-24	576	3,744	.047	-.005	.328
	19.5	1.000	1.000 LONGIT.		$\Sigma Rd^2 = 79,782$			SEE NOTE	

NOTE: SIGNS REVERSE FOR FORCE IN OPPOSITE DIRECTION. THEREFORE, DESIGN FOR ABSOLUTE VALUE OF TORSION FORCE.

TORSION:

BUILDING IS SYMMETRICAL, ∴ NO CALCULATED TORSION. ACCIDENTAL TORSION IS BASED ON ECCENTRICITY OF 5% OF MAX. DIM.

N-S EQ: $M_T = [0.05(192')] \times F = 9.6' \times 1.00^K = 9.6\ K'$

FORCE TO FRAMES 1 THROUGH 7

$$= \frac{(Rd^2/\Sigma Rd^2)\,M_T}{|d|} = \frac{9.6}{|d|} \cdot \frac{Rd^2}{\Sigma Rd^2}$$

E-W EQ: $M_T = [0.05(48')] \times F = 2.4' \times 1.00^K = 2.4\ K'$

FORCE TO FRAMES A, B, C

$$= \frac{(Rd^2/\Sigma Rd^2)\,M_T}{|d|} = \frac{2.4}{|d|} \cdot \frac{Rd^2}{\Sigma Rd^2}$$

Figure D-2. Continued.

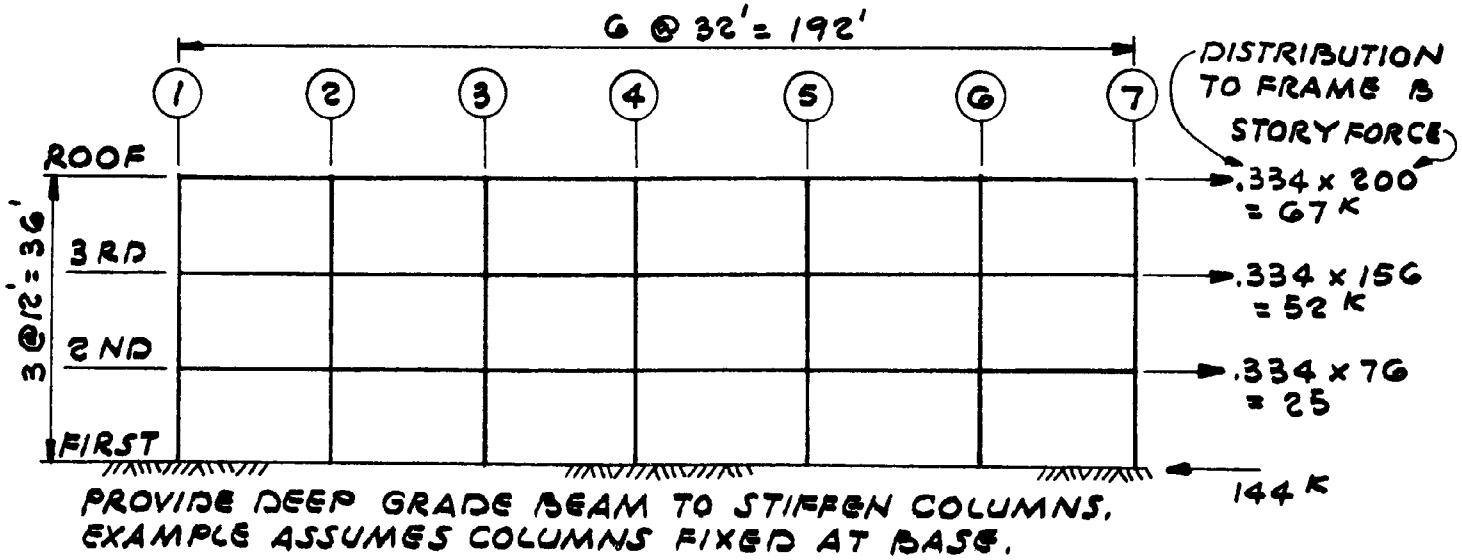

PROVIDE DEEP GRADE BEAM TO STIFFEN COLUMNS. EXAMPLE ASSUMES COLUMNS FIXED AT BASE.

BEAM	b x D	I_g ft^4	w_{DL}	w_{LL}	REDUCED LL
ROOF	28"x30"	3.04	3.14 K/'	0.27 K/'	12 PSF
3RD & 2ND	28"x30"	3.04	3.94 K/'	0.72 K/'	30 PSF

ALL COLUMNS 24"x24"
$I_c = 1.33\ ft^4$

$f' = 4000$ PSI (STONE AGG.)

$E = 57{,}000 \times \sqrt{4000}$
$= 3{,}605{,}000$ PSI
$= 519{,}000$ KSF

REQUIRED OUTPUT

- BEAM & COLUMN END MOMENTS AT FACE OF SUPPORT
- COLUMN SHEAR & AXIAL LOAD
- FRAME PERIOD AND HORIZONTAL DEFLECTION UNDER LATERAL LOADS

BEAM DIMENSION LIMITATIONS (FIG. 8.2)

WIDTH = 28" > 10" MIN
DEPTH = 30 < 3.33 b MAX.
WIDTH = 28 < COL. WIDTH + 1.5d MAX

FRAME ANALYSIS = INPUT - FRAME (B)

Figure D–2. Continued.

FRAME ANALYSIS RESULTS (CALCS. NOT SHOWN) FRAME B

	DL	LL	SEISMIC F
ROOF	3.14	0.27 K/'	67 K
3RD	3.94	0.72	52
2ND	3.94	0.72	25

VALUES OF MOMENTS AND SHEARS ARE TAKEN AT FACE OF COLUMN OR BEAM.

ALL BEAMS 28"x 30"

ALL COLUMNS 24"x24"

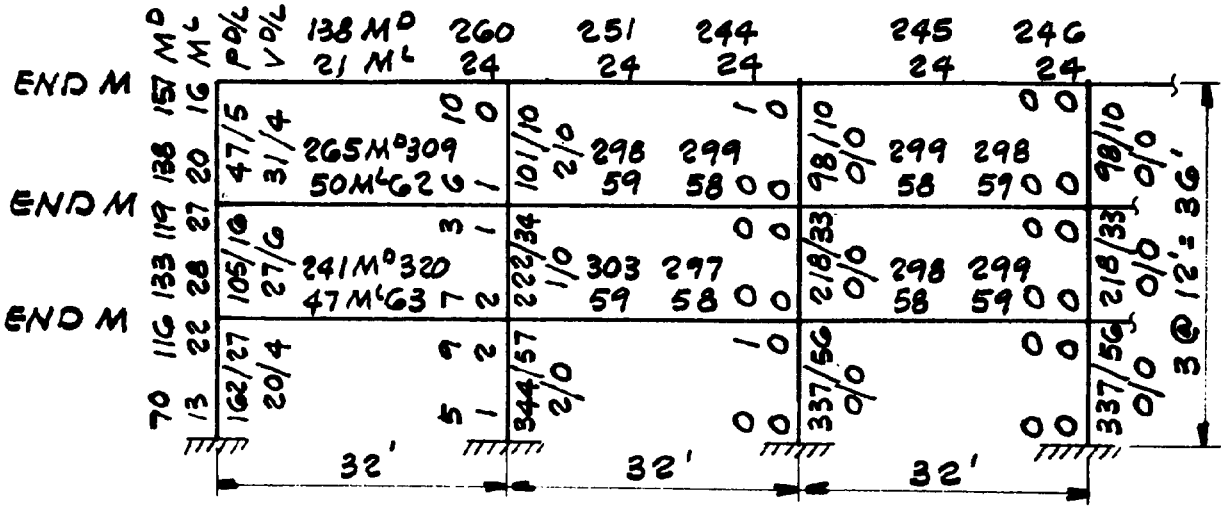

VERTICAL LOAD

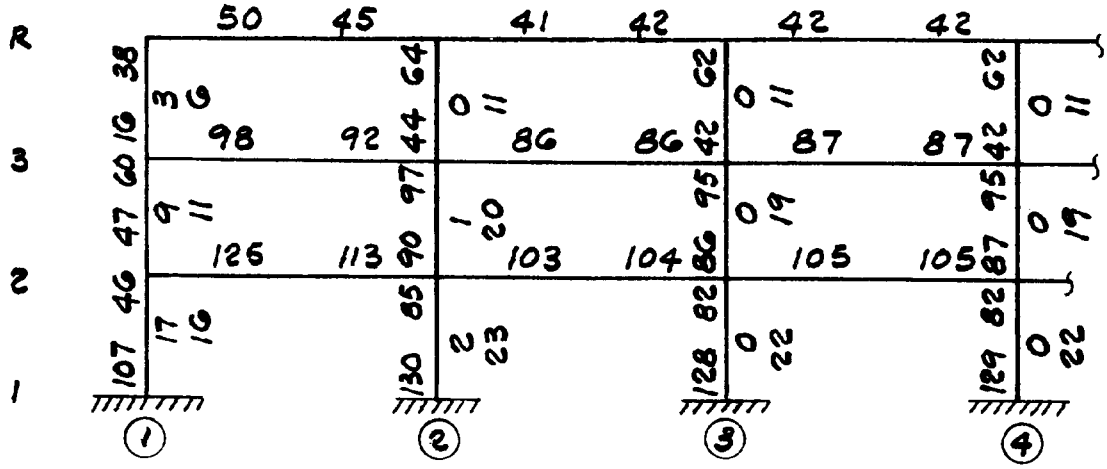

LATERAL LOAD

APPROX. 2ND STORY DRIFT

$$\Delta_{COL} = \frac{Ph^3}{12E_cI_c} = \frac{20(12)^3}{12(3600)1.33(12)} = .05''$$

$$\Delta_{TOTAL} = (.05'' + .055'') = .105''$$

$$\Delta_{GIR} = \frac{Plh^2}{12E_bI_b} = \frac{20(30)(12)^2}{12(3600)3.04(12)} = .055''$$

$$\Delta_{ALLOW.} = \frac{.04}{R_w}h = .48'' \text{ OK}$$

Figure D-2. Continued.

DESIGN FORCES FOR BEAMS - PROCEDURE

1. Obtain end M's and V's at face of support. These are given on p. 10 for Frame B.

2. Calculate and tabulate factored M's and V's.

   a. Vertical load only

      $1.4D + 1.7L$

   b. Vertical plus maximum increase due to seismic

      $1.4\ (D+L+E)$ when E is in direction adding to $-M$

   c. Vertical minus reverse loading due to seismic

      $0.9D + 1.4E$ when E is in direction giving $+M$

3. Calculate and tabulate max. pos. mom. away from the end of the beam:

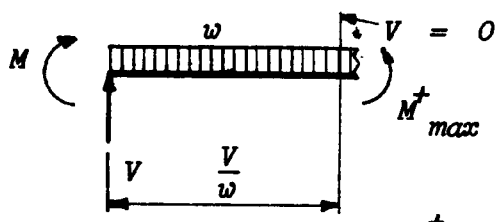

$V = 0$

M^+_{max}

$+M$ produces tension on the bottom

$+V$ is upward at the left end of the beam

$$M^+_{max} = M + \frac{V^2}{2w} \quad (wL > V > 0)$$

4. Select maximum values for design. It is strongly recommended to sketch moment diagrams, especially when spans and loads are irregular.

5. Checkerboard loading may govern, maximum positive moments.

DESIGN FORCES FOR COLUMNS

1. Obtain P, M, V at face of support. These are given on p. 10 for Frame B

2. Calculate and tabulate factored M's and P's

   a. $1.4\ D$
   b. $1.4D + 1.7L$
   c. $1.4(D+L+E)$ for E in direction adding to vert. load
   d. $0.9D+1.4E$ for E in direction opp. to vert. load

Figure D-2. Continued.

BEAM FORCES

FRAME (B) FLOOR 2 FROM (1) TO (2)

28" x 30" d = 27½ +M = TENS. ON BOTTOM	END 1		CLEAR SPAN = 30.0'			END 2	
	M	V	w	wL'	M+	M	V
(P.10) D L E ⇄	-241 k' -47 ± 125	+56.5 +10.6 ∓ 8	3.94 k/' 0.72 -	119 k 22 -	164 31 SMALL	-820 -63 ∓ 113	+62 +12 ± 8
1.4D + 1.7L M+	-417	+97			+282	-555	+106
1.4(D+L+E) M+	-228	+83			+273	-694	+114
1.4(D+L+E) +M	-578	+105			+273	-378	+92
0.9D+1.4E	-40	+40				-446	+67
0.9D+1.4E	-392	+62				-130	+44.5
MAX. NEG. MAX. POS.	-578 - *				- +282	-694 - *	
1.4(D+L) (D+L)		94 67					103 74

* IN THIS EXAMPLE, THE SEISMIC MOMENTS ARE NOT LARGE ENOUGH TO CAUSE LOAD REVERSAL.

Figure D-2. Continued.

BEAM LONGITUDINAL REINFORCEMENT

$f_y = 60$, $f_c' = 4$

(1) FRAME B FLOOR 2 (2)

$m = \frac{f_y}{0.85 f_c'} = 17.65$

$w_D = 3.94^{k}/_{1}$, $w_L = 0.72^{k}/_{1}$

28" x 30" d = 27.5" F = 1.76

$\ell' = 30.0'$

$-M$	-578		-694	-651
$K = \frac{M}{F}$	328		394	
a_u	4.24		4.19	
REQ'D $A_s = \frac{M}{a_u d}$	4.96		6.02	
TOP BARS	5-#9		6-#9	
ACTUAL A_s	5.00		6.00	MIN. ρ = .0033
ρ	.00649		.00779	MAX. ρ = .025
$+M$		282		
K		175		
a_u		4.37		
REQ'D A_s		2.56		
½ TOP A_s	2.48		3.01	
BOTT. BARS	3-#9	4-#9	3-#9	
ACTUAL A_s	3.00	4.00	3.00	
ρ	.00390	.00519	.00390	

ULTIMATE MOMENT CAPACITY FURNISHED M_u

K	330		391	
$-M_u = KF$	581		688	
K	203	269	203	
$+M_u$	357	473	357	

ULT. MOM. CAP'Y: $\phi = 1.0$ & STEEL AT $1.25 f_y$** M_p

K	406 ÷ 0.9 = 451		481 ÷ 0.9 = 534	
$-M_p$	794		940	
K	250 ÷ 0.9 = 278		250 ÷ 0.9 = 278	
$+M_p$	489	641	489	

** SOLVE BY MODIFYING ρ BY 1.25 FACTOR.

Figure D-2. Continued.

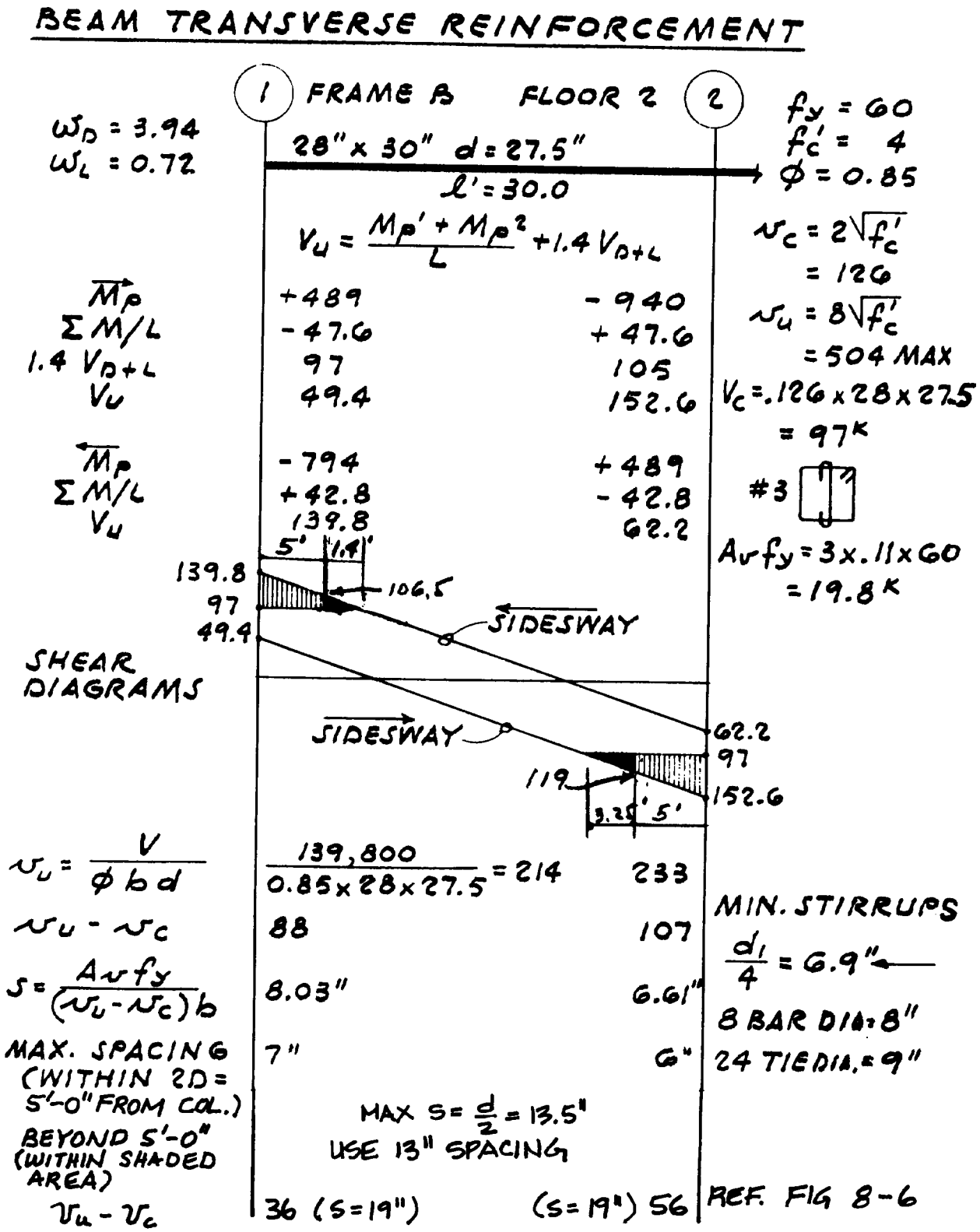

Figure D-2. Continued.

COLUMN FORCES FRAME (B)

1ST STORY	COLUMN B-1			COLUMN B-2		
	AXIAL	MOMENT		AXIAL	MOMENT	
		TOP	BOTTOM		TOP	BOTTOM
D	162	116	70	344	-9	-5
L	27	22	13	57	-2	-1
E →	-17	-46	-107	-2	-85	-130
E ←	+17	+46	+107	+2	+85	+130
1.4D + 1.7L	272.7	199.8	120.1	578.8	-16.0	-8.7
1.4(D+L+E)	240.8	128.8	-33.6	558.6	-134.4	-190.4
1.4(D+L+E)	288.4	257.6	266.0	564.2	103.6	173.6
0.9D + 1.4E	122.0	40.0	-86.8	306.8	-127.1	-186.5
0.9D + 1.4E	169.6	168.8	212.8	312.4	110.9	177.5

COLUMN PROPERTIES (B-2)

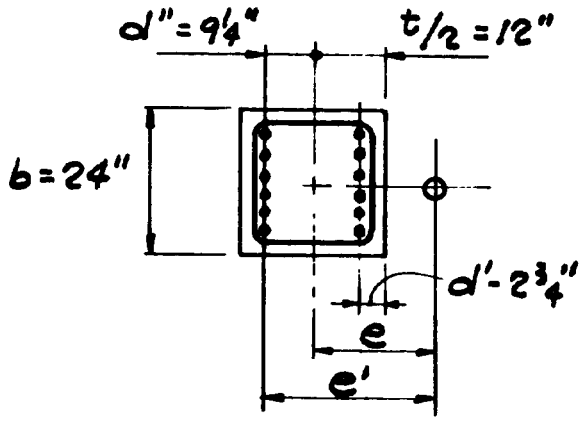

$f_c' = 4000$ PSI

$f_y = 60{,}000$ PSI

6 - #10 EACH FACE

$A_s = A_s' = 7.62$ IN^2

$d = 21\frac{1}{4}$"

$d'/d = 0.129$

$\phi = \frac{18\frac{1}{2}"}{24"} = 0.77$

DIMENSIONAL LIMITATIONS:

WIDTH = 24" > 12" OK

$\frac{\text{MIN. DIM.}}{\text{MAX. DIM.}} = \frac{24}{24} = 1 > 0.4$ OK

$h = b \geq 20 d_b$ OF BEAMS

$24" > 20 \times 9/8 = 22.5"$ OK

$E_c = 519{,}000$ KSF
$I_c = 1.33$ FT^4 } P. 9

$E_c I_c = 690{,}000$ K·FT^2

$r = 0.3t = 0.60$ FT

$L_u = 9.5$ FT

Figure D-2. Continued.

COLUMN SLENDERNESS — FRAME (B)

1ST STORY	COLUMN B-1		COLUMN B-2	
	TOP	BOTTOM	TOP	BOTTOM
$K = I/L$	1.33/9.5 = 0.14			
ΣK (COLS)	0.28	0.14	0.28	0.14
BEAM I/L	3.04/30 = 0.10			
ΣK (BMS.)	0.10	∞	0.20	∞
$\psi = \frac{\Sigma K \text{ COL}}{\Sigma K \text{ BM}}$	2.8	1 FIXED END	1.4	1 FIXED END
k	1.54		1.37	
kL/r	1.54 x 9.5/0.6 = 24.4 > 22 ∴ "SLENDER" (CONT. BELOW)		1.37 x 9.5/0.6 = 21.7 < 22 ∴ "SHORT" (CONT. ON P.17)	

	MAX. AXIAL	MIN. AXIAL	REMARKS
P_u	288.4	122.0	Σ AXIAL, FRAME B
ΣP_u (ALL COLS)	3440 ←		(2 x 272.7) + (5 x 578.8)
$\beta_d = \frac{M_D}{M_T}$	$\frac{116}{258} = 0.450$	$\frac{116}{40} = 2.90$	
EI	190,000	70,800	$EI = \frac{\frac{E_c I_c}{2.5}}{1+\beta_d}$
$P_c = \frac{\pi^2 EI}{(KL_u)^2}$	8760	3260	
ΣP_c (ALL COLS)	72,900		$(2 \times 8760) + \left(5 \times \left(\frac{1.54}{1.37}\right)^2 \times 8760\right)$
$\delta = \frac{C_m}{1 - \frac{P_u}{\phi P_c}}$	1.049	1.056	$C_m = 1.0$ FOR UNBRACED COLUMNS
$\delta = \frac{C_m}{1 - \frac{\Sigma P_u}{\phi \Sigma P_c}}$	1.072		$\phi = 0.7$
			MAX. COL. M_u = 266 K' (P.15)
δM	1.072 x 266.0 = 285 K'	≈ 1.07 x 86.8 = 93 K'	REQ'D DES. M_u (NOTE: OTHER P.15 COMBIN. OF P & M WERE ALSO INVESTIGATED)

Figure D-2. Continued.

COLUMN CAPACITY — FRAME (B)

1ST STORY	COLUMN B-1	COLUMN B-2
SIZE	24" x 24"	24" x 24"
BARS	8 - #9 $A_{st} = 8.00$	12 - #10 $A_{st} = 15.24$
$\frac{P_u}{A_g} = \frac{\phi P_n}{A_g}$	$\frac{288.4}{24 \times 24} = 0.500$ KSI	$\frac{558.6}{24 \times 24} = 0.970$

COL. MOM. CAPACITY MUST BE GREATER THAN BEAM CAPACITY SINCE $P/A_g > 0.12 f_c' = 0.40$ KSI (SEE CHECK BELOW)

$\rho_g = \frac{A_{st}}{A_g}$	$\frac{8.00}{24 \times 24} = 0.0139$	$\frac{15.24}{24 \times 24} = 0.0264$

USING ACI SP17A-(85) CHART "COL. E4 - 60.75" FIND

ϕM_n	485 K' (> $\delta M_u = 285$)	785 K' (> $M_u = 190.4$)

COL. MOM CAPACITY, M_p @ $\phi = 1$, STEEL @ $1.25 f_y$ (which may be approximated by using $1.25 A_s$)

	$\rho = 1.25 \times 0.0139 = 0.0174$	$\rho = 1.25 \times 0.0264 = 0.0330$
	$\frac{\phi M_n}{A_g h} = 0.48$	$\frac{\phi M_n}{A_g h} = 0.79$
M_p	$= \frac{0.48 \times 24^3}{0.7 \times 12} = 790$ K'	$= \frac{0.79 (24)^3}{0.7 \times 12} = 1300$ K'

CHECK COL. CAP'Y > BEAM CAP'Y

Σ COL. M $> \frac{6}{5} \Sigma$ BM. M

	581/2 = 291 K'	(357 + 688)/2 = 522
	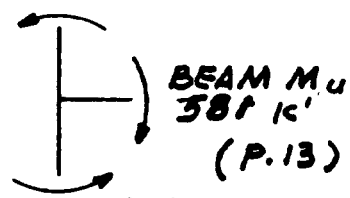	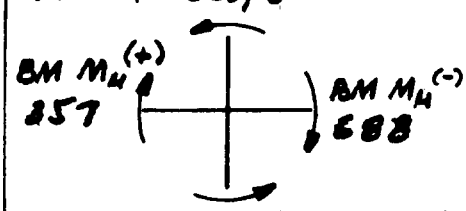
	291 K' = ½ (BEAM M_u)	522 = ½ (Σ BM M_u)
	COL. M_u = 485 K' $> \frac{6}{5} \times 291 = 349$ OK	COL. M_u = 782 K' $> \frac{6}{5} \times 522 = 626$ OK

Figure D-2. Continued.

COLUMN SHEAR — FRAME B

1ST STORY	COLUMN B-1	COLUMN B-2
	BM YIELDS BEFORE COL BM M_p = 794 397 — $M_T = \frac{1}{2}$ BM M_p 9.5' 790 — M_B = COL. M_p	715 — $M_T = \frac{1}{2}(\Sigma BM M_p)$ 9.5' 1300 — M_B = COL. M_p
V	$\frac{397 + 790}{9.5'} = 125$ K	$\frac{715 + 1300}{9.5'} = 212$ K
$v_u = \frac{V}{\phi A_c}$	$\frac{125}{.850 \times 420} = 0.35$ KSI ← P. 19	$\frac{212}{.85 \times 420} = 0.59$
$v_u - v_c$	.350 − .126 = .224 KSI	.59 − .126 = .454 KSI
TIE $S = \frac{A_v f_y}{(v_u - v_c) d_c}$	$\frac{3 \times 0.20\square'' \times 60^K}{.224 \text{ KSI} \times 20.5''} = 7.81''$ USE 8"	$\frac{4 \times 0.20\square'' \times 60^K}{.454 \text{ KSI} \times 20.5''} = 5.16$ USE 5"

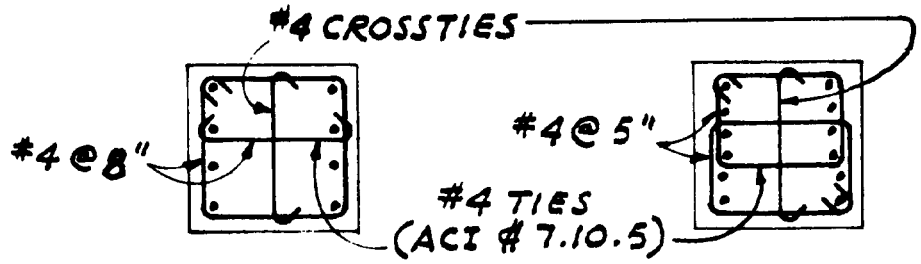

USE #4 COLUMN TIES, $A = 0.20\square''$

MAX. SPACING, $S_{MAX} = \frac{\text{COL. DIM.}}{2} = 12''$

Figure D-2. Continued.

COLUMNS: SPECIAL TRANSVERSE REINFORCEMENT

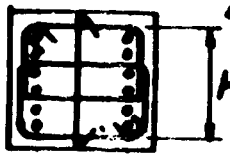

FOR CONFINEMENT

$h_c = 24 - 2(1\tfrac{3}{4}) = 20.5''$

TIE SETS @ SPACING s, $s \leq 4''$

A_{sh} = TOTAL AREA OF HOOPS

$A_g = 24 \times 24 = 576\ IN^2$

$A_c = 20.5 \times 20.5 = 420\ IN^2$

$f_c' = 4{,}000 \quad f_{yh}'' = 60{,}000$

REF. ACI 21.4.4.1

(1) $$= \frac{A_{sh}}{0.30 h_c'' \frac{f_c'}{f_{yh}} \left(\frac{A_g}{A_{ch}} - 1\right)} = \frac{A_{sh}}{0.30 \times 20.5 \times \frac{4}{60} \left(\frac{576}{420} - 1\right)} = 6.57 A_{sh}$$

LARGER GOVERNS

(2) $$= \frac{A_{sh}}{0.09\, h_c \frac{f_c'}{f_{yh}''}} = \frac{A_{sh}}{0.09 \times 20.5 \times \frac{4}{60}} = 8.13\ A_{sh}$$

BAR SIZE	A_s	A_{sh}	$8.13 A_{sh}$	
#3	0.11	0.44	3.58	
#4	0.20	0.80	6.50	← USE #4 GR 60 @ 6½"
#5	0.31	1.24	10.08	

EXTENT OF SPECIAL TRANSV. REINF. IS THE MAXIMUM OF:

- MAX. COL. DIMENSION = 24" ←
- 1/6 CLEAR HEIGHT = 114/6 = 19"
- 18"

EXTEND MIN. 2'-0" ABOVE & BELOW

CONTINUED →

Figure D-2. Continued.