ARMY TM 5-805-4
AIRFORCE AFJMAN 32-1090

TECHNICAL MANUAL

NOISE AND VIBRATION CONTROL

APPROVED FOR PUBLIC RELEASE; DISTRIBUTION IS UNLIMITED

HEADQUARTERS, DEPARTMENTS OF THE ARMY AND THE AIR FORCE
26 MAY 1995

REPRODUCTION AUTHORIZATION/RESTRICTIONS

This manual has been prepared by or for the Government and, except to the extent indicated below, is public property and not subject to copyright.

Copyrighted material included in the manual has been used with the knowledge and permission of the proprietors and is acknowledged as such at point of use. Anyone wishing to make further use of any copyrighted material, by itself and apart from this text, should seek necessary permission directly from the proprietors.

Reprints or republications of this manual should include a credit substantially as follows: "Joint Departments of the Army and Air Force, TM 5-8054/AFJMAN 32-1090 Noise and Vibration Control _____."

If the reprint or publication includes copyrighted material, the credit should also state: "Anyone wishing to make further use of copyrighted material, by itself and apart from this text, should seek necessary permission directly from the proprietors."

TECHNICAL MANUAL
NO. 5-805-4
AIR FORCE MANUAL
NO. 88-37

***TM 5-805-4/AFJMAN 32-1090**
HEADQUARTERS
DEPARTMENTS OF THE ARMY
AND THE AIR FORCE
WASHINGTON, DC, *26 May 1995*

NOISE AND VIBRATION CONTROL

			Paragraph	Page
CHAPTER	1.	GENERAL		
		Purpose	1-1	1-1
		Scope	1-2	1-1
		References	1-3	1-1
		Noise Estimates	1-4	1-1
		English, Metric Units	1-5	1-1
		Explanation of Abbreviation and Terms	1-6	1-1
	2.	Noise and Vibration Criteria		
		General	2-1	2-1
		Noise Criteria In Buildings	2-2	2-1
		Vibration Criteria In Building	2-3	2-4
	3.	Sound Distribution Indoors		
		General	3-1	3-1
		Sound Pressure Level in a Room	3-2	3-1
		Room Constant	3-3	3-2
		Sample Calculations	3-4	3-4
	4.	Sound Isolation Between Rooms		
		Objective	4-1	4-1
		Sound Transmission Loss (TL), Noise Reduction (NR) & Sound Transmission Class (STC)	4-2	4-1
		Transmission Loss-Walls, Doors, Windows	4-3	4-4
		Transmission Loss of Floor-Ceiling Combinations	4-4	4-6
	5.	Sound Propagation Outdoors		
		Introduction	5-1	5-1
		Distance Effects	5-2	5-1
		Atmospheric Effects	5-3	5-4
		Terrain and Vegetation	5-4	5-6
		Barriers	5-5	5-7
		Reception of Outdoor Noise Indoors	5-6	5-11
		Combined Effects, Sample Calculation	5-7	5-12
		Source Directivity	5-8	5-13
	6.	Airborne Sound Control		
		Introduction	6-1	6-1
		Indoor Sound Analysis	6-2	6-1
		Outdoor Sound Problem and Analysis	6-3	6-2
		Quality of Analysis Procedure	6-4	6-2
		Noise Control Treatments	6-5	6-3
	7.	Air Distribution Noise for Heating, Ventilating and Air Conditioning *SYSTEMS*		
		Introduction	7-1	7-1
		General Spectrum Characteristics of Noise Sources	7-2	7-1
		Specific Characteristics of Noise Sources	7-3	7-1
		Control of Fan Noise in a Duct Distribution System	7-4	7-3
		Procedure for Calculating Noise Control Requirements for an Air Distribution System	7-5	7-7
		Calculation Example	7-6	7-9
	8.	Vibration Control		
		Introduction	8-1	8-1
		Vibration Isolation Elements	8-2	8-1
		Mounting Assembly Types	8-3	8-3
		Tables of Recommended Vibration Isolation Details	8-4	8-6
		Vibration Isolation-Miscellaneous	8-5	8-10
	9.	Mechanical Noise Specifications		
		Objective	9-1	9-1
		General Considerations	9-2	9-1

This manual supersedes TM 5-805-4/AFM 88-37/NAVFAC DM 3.10, dated 30 December 1983, recind DD Forms 2294, 2295, 2296, 2297, 2298, 2299, 2300, 2301, 2302, 2303, dated October 1983

			Paragraph	Page
		Partitions and Enclosures	9-3	9-1
		Mufflers and Duct Lining for Ducted Ventilation System	9-4	9-1
		Sound Levels for Equipment	9-5	9-1
CHAPTER	10.	NOISE AND VIBRATION MEASUREMENTS		
		Objective	10-1	10-1
		Sound and Vibration Instrumentation	10-2	10-1
		Measurement of Noise and Vibration in Buildings	10-3	10-2
		Measurement of Noise and Vibration Outdoors	10-4	10-2
APPENDIX	A.	REFERENCES		
	B.	BASICS OF ACOUSTICS		
	C.	SOUND LEVEL DATA FOR MECHANICAL AND ELECTRICAL EQUIPMENT		
GLOSSARY				
BIBLIOGRAPHY				

List of Figures

			Page
FIGURE	2-1.	Noise Criterion (NC) curves	2-2
	2-2.	Room Criterion (RC) curves	2-3
	2-3.	Approximate Sensitivity and Response of People to Feelable Vibration	2-6
	2-4.	Vibration Criteria for Damage Risk to Buildings	2-7
	2-5.	Vibration Criteria for Sensitive Equipment in Buildings	2-8
	2-6.	Vibration Acceleration Levels of a Large Vibrating Surface that Will Produce Radiated Sound Levels Into a Room Approximating the Sound Levels of the NC Curves	2-9
	3-1.	Approximate Relationship Between Relative Sound Pressure Level (REL SPL) and Distance to a Sound Source for Various Room Constant Values	3-2
	3-2.	Room Constant Estimate	3-5
	4-1.	Improvement in Transmission Loss Caused by Air Space Between Double Walls Compared to Single Wall of Equal Total Weight, Assuming no Rigid Ties Between Walls	4-3
	4-2.	Natural Frequency of a Double Wall With an Air Space	4-4
	4-3.	Schematic Illustration of Flanking Paths of Sound	4-5
	4-4.	Typical Floating Floor Construction	4-20
	4-5.	Suggested Applications and Details of Floating Floors for Improvement of Airborne Sound Transmission Loss	4-21
	4-6.	Structureborne Flanking Paths of Noise (Paths 2 and 3) Limit the Low Sound Levels Otherwise Achievable With High-TL Floating Floor Construction (Path 1)	4-22
	4-7.	Nonflat Concrete Floors	4-22
	5-1.	Inverse Square Law of Sound Propagation	5-2
	5-2.	Downwind sound diffraction	5-6
	5-3.	Upwind Sound Diffraction	5-6
	5-4.	Effects of Temperature Gradients on Sound Propagation	5-7
	5-5.	Outdoor Sound Propagation Near the Ground	5-7
	5-6.	Parameters and Geometry of Outdoor Sound Barrier	5-8
	5-7.	Examples of Surfaces That Can Reflect Sound Around or Over a Barrier Wall	5-10
	5-8.	Compound Barriers	5-11
	5-9.	Edge Effects at End of Barrier	5-12
	5-10.	Elevation Profile of Cooling Tower Used in Example	5-14
	7-1.	Good and Poor Air Delivery Conditions to Air Outlets	7-4
	7-2.	Plan View of Supply Duct for Example	7-12
	8-1.	Suggested Arrangement of Ribbed Neoprene Pads for Providing Resilient Lateral Restraint to a Spring Mount	8-4
	8-2.	Schematic of Vibration Isolation Mounting for Fan and Drive-Assembly of Propeller-Type Cooling Tower	8-6
	8-3.	Schematic of a Resilient Clamping Arrangement With Ribbed Neoprene Pads	8-7
	B-1.	Approximate Electrical Frequency Response of the A-, B-, and C-Weighted Networks of Sound Level Meters	B-7
	B-2.	Transmissibility of a Simple Undamped Single Degree-of-Freedom System	B-1
	C-1.	Sound Pressure Levels of Reciprocating Compressors at 3-ft. Distance	C-2
	C-2.	Sound Pressure Levels of Centrifugal Compressors at 3-ft. Distance	C-3
	C-3.	Principal Types of Cooling Towers	C-6
	C-4.	Sound Pressure Levels of Pumps at 3-ft. Distance	C-li
	C-5.	Sound Pressure Levels of Air Compressors at 3-ft. Distance	C-13
	C-6.	Sound Pressure Levels of TEFC Motors at 3-ft. Distance	C-22
	C-7.	Sound Pressure Levels of DRPR Motors at 3 ft. Distance	C-23
	C-8.	Sound Pressure Levels of Steam Turbines at 3 ft. Distance	C-24

List of Tables

			Page
Table	2-1.	Category Classification and Suggested Noise Criterion Range for Intruding Steady-State Noise as Heard in Various Indoor Functional Activity Areas	2-4
	2-2.	Speech Interference Levels (SIL) That Permit Barely Acceptable Speech Intelligibility at the Distances and Voice Levels Shown	2-5
	3-1.	Reduction of SPL (in dB) in Going From Normalized 3-ft. Distance and 800-ft.2 Room Constant to Any Other Distance and Room Constant	3-3
	3-2.	REL SPL Values for a Range of Distances “D” and Room Constants “R”, for Use With PWL Data	3-4
	3-3.	Sound Absorption Coefficients of General Building Materials and Furnishings	3-6
	3-4.	Low Frequency Multipliers For Room Constants	3-7
	3-5.	Summary of Data and Calculations Illustrating Use of Equation 3-1	3-8
	3-6.	Summary of Data and Calculations Illustrating Use of Equation 3-2	3-9
	4-1.	Wall or Floor Correction Term “C” for Use in the Equation NR TL + “C”	4-2
	4-2.	Transmission Loss (in dB) of Dense Poured Concrete or Solid-Core Concrete Block or Masonry	4-7
	4-3.	Transmission Loss (in dB) of Hollow-Core Dense Concrete Block or Masonry	4-8
	4-4.	Transmission Loss (in dB) of Cinder Block or Other Lightweight Porous Block Material with Impervious Skin on Both Sides to Seal Pores	4-9
	4-5.	Transmission Loss (in dB) of Dense Plaster	4-10
	4-6.	Transmission Loss (in dB) of Stud-Type Partitions	4-11
	4-7.	Transmission Loss (in dB) of Plywood, Lumber, and Simple Wood Doors	4-13
	4-8.	Transmission Loss (in dB) of Glass Walls or Windows	4-14
	4-9.	Transmission Loss (in dB) of Typical Double-Glass Windows, Using ¼-in.-Thick Glass Panels With Different Air Space Widths	4-15
	4-10.	Transmission Loss (in dB) of a Filled Metal Panel Partition and Several Commercially Available Acoustic Doors	4-16
	4-11.	Approximate Transmission Loss (in dB) of Aluminum, Steel and Lead	4-17
	4-12.	Transmission Loss (in dB) of Type 1 Floor-Ceiling Combinations	4-18
	4-13.	Transmission Loss (in dB) of Type 2 Floor-Ceiling Combinations	4-18
	4-14.	Transmission Loss (in dB) of Type 3 Floor-Ceiling Combinations	4-19
	4-15.	Transmission Loss (in dB) of Type 4 Floor-Ceiling Combinations	4-19
	4-16.	Approximate Improvement in Transmission Loss (in dB) When Type 5 Floating Floor is Added to Types 1 through 4 Floor-Ceiling Combinations	4-20
	5-1.	Molecular Absorption Coefficients, dB per 1000 ft., as a Function of Temperature and Relative Humidity	5-3
	5-2.	Values of Anomalous Excess Attenuation per 1000 ft.	5-4
	5-3.	Distance Term (DT), in dB, to a Distance of 80 ft.	5-4
	5-4.	Distance Term (DT), in dB, at Distances of 80 ft. to 8000 ft.	5-5
	5-5.	Insertion Loss for Sound Transmission Through a Growth of Medium-Dense Woods	5-8
	5-6.	Insertion Loss of an Ideal Solid Outdoor Barrier	5-9
	5-7.	Approximate Noise Reduction of Typical Exterior Wall Constructions	5-13
	5-8.	Location “A” Cooling Tower Problem	5-15
	5-9.	Location “B” Cooling Tower Problem	5-15
	7-1.	Plenum/Ceiling Transfer Factor	7-3
	7-2.	Approximate Natural Attenuation in Unlined Sheet-Metal Ducts	7-5
	7-3.	Attenuation in Lined Ducts	7-6
	7-4.	Power Level Loss at Branches	7-7
	7-5.	End Reflection Loss	7-8
	7-6.	Losses Caused by Duct Elbows	7-9
	7-7.	Representative IL Values for Sound Attenuators	7-10
	8-1.	General Types and Applications of Vibration Isolators	8-2
	8-2.	Vibration Isolation Mounting for Centrifugal and Axial-Flow Fans	8-8
	8-3.	Vibration Isolation Mounting for Reciprocating Compressor Refrigeration Equipment Assembly	8-9
	8-4.	Vibration Isolation Mounting for Rotary Screw Compressor Refrigeration Equipment Assembly	8-12
	8-5.	Vibration Isolation Mounting for Centrifugal Compressor Refrigeration Equipment Assembly	8-13
	8-6.	Vibration Isolation Mounting for Absorption-Type Refrigeration Equipment Assembly	8-14
	8-7.	Vibration Isolation Mounting for Boilers	8-15
	8-8.	Vibration Isolation Mounting for Propeller-Type Cooling Towers	8-16
	8-9.	Vibration Isolation Mounting for Centrifugal-Type Cooling Towers	8-17
	8-10.	Vibration Isolation Mounting for Motor-Pump Assemblies	8-18
	8-11.	Vibration Isolation Mounting for Steam-Turbine-Driven Rotary Equipment	8-19
	8-12.	Vibration Isolation Mounting for Transformers	8-20
	8-13.	Vibration Isolation Mounting for One- or Two-Cylinder Reciprocating-Type Air Compressors in the 10- to 100-hp Size Range	8-21
	9-1.	Sample Sound Pressure Level Specification	9-3
	9-2.	Sample Sound Power Level Specification	9-4
	B-1.	Bandwidth and Geometric Mean Frequency of Standard Octave and 1/3 Octave Bands	B-6

List of Tables (Cont'd)

			Page
Table	B-2.	Relationship Between Changes in Sound Level, Acoustic Energy Loss, and Approximate Relative Loudness of a Sound	B-9
	B-3.	Suggested Schedule for Estimating Relative Vibration Isolation Effectiveness of a Mounting System	B-11
	C-1.	Sound Pressure Levels (in dE at 3-ft. Distance) for Packaged Chillers with Reciprocating Compressors	C-2
	C-2.	Sound Pressure Levels (in dE at 3-ft. Distance) for Packaged Chillers with Rotary Screw Compressors	C-3
	C-3.	Sound Pressure Levels (in dE at 3-ft. Distance) for Packaged Chillers with Centrifugal Compressors	C-4
	C-4.	Sound Pressure Levels (in dB at 3-ft. Distance) for Absorption Machines	C-4
	C-5.	Sound Pressure Levels (in dE at 3-ft. Distance from the Front) for Boilers	C-S
	C-6.	Sound Pressure Levels (in dE at 3-ft. Distance) for High-Pressure Thermally Insulated Steam Valves and Nearby Piping	C-S
	C-7.	Frequency Adjustments (in dE) for Propeller-Type Cooling Towers	C-7
	C-8.	Frequency Adjustments (in dE) for Centrifugal-Fan Cooling Towers	C-7
	C-9.	Correction to Average SPLs for Directional Effects of Cooling Towers	C-8
	C-10.	Approximate Close-In SPLs (in dB) Near the Intake and Discharge Openings of Various Cooling Towers (3- to 5-ft. Distance)	C-9
	C-11.	Overall and A-Weighted Sound Pressure Levels (in dB and dE(A) at 3-ft. Distance) for Pumps	C-1
	C-12.	Frequency Adjustments (in dB) for Pumps	C-1
	C-13.	Specific Sound Power Levels Kw (in dE), Blade Frequency Increments (in dB) and Off-Peak Correction for Fans of Various Types, for Use in Equation C-S	C-12
	C-14.	Approximate Octave-Band Adjustments for Estimating the PWL of Noise Radiated by a Fan Housing and its Nearby Connected Duct Work	C-13
	C-15.	Sound Pressure Levels (in dE at 3-ft. Distance) for Air Compressors	C-14
	C-16.	Correction Terms (in dB) to be Applied to Equation C-6 for Estimating the Overall PWL of the Casing Noise of a Reciprocating Engine	C-14
	C-17.	Frequency Adjustments (in dE) for Casing Noise of Reciprocating Engines	C-15
	C-18.	Frequency Adjustments (in dB) for Turbocharger Air Inlet Noise	C-15
	C-19.	Frequency Adjustments (in dE) for Unmuffled Engine Exhaust Noise	C-16
	C-20.	Overall PWLs of the Principal Noise Components of Gas Turbine Engines having no Noise Control Treatments	C-17
	C-21.	Frequency Adjustments (in dE) for Gas Turbine Engine Noise Sources	C-18
	C-22.	Approximate Noise Reduction of Gas Turbine Engine Casing Enclosures	C-19
	C-23.	Approximate Directivity Effect (in dB) of a Large Exhaust Stack Compared to a Nondirectional Source of the Same Power	C-20
	C-24.	Frequency Adjustments (in dE) for TEFC Electric Motors	C-21
	C-25.	Frequency Adjustments (in dE) for DRPR Electric Motors	C-23
	C-26.	Sound Pressure Levels (in dB at 3 ft distance) for Steam Turbines	C-24
	C-27.	Approximate Sound Pressure Levels (in dE at 3-ft. Distance) for Gears, in the 125-through 8000-Hz Octave Bands, from Equation C-16	C-25
	C-28.	Approximate Overall PWI (in dE) of Generators, Excluding the Noise of the Driver Unit	C-25
	C-29.	Frequency Adjustments (in dE) for Generators Without Drive Unit	C-26
	C-30.	Octave-Band Corrections (in dE) to be Used in Equation C-17 for obtaining PWL of Transformers in Different Installation Conditions	C-27

CHAPTER 1

GENERAL

1-1. Purpose.

This manual provides qualified designers the criteria and guidance required for design and construction of those features related to noise and vibration control of mechanical equipment systems most commonly encountered in military facilities.

1-2. Scope.

These criteria apply to all new construction and to major alteration of existing structures. US military facilities that require higher standards because of special functions or missions are not covered in this manual; criteria for these and other exceptions are normally contained in a design directive. If standards given in this manual and its referenced documents do not provide all the needs of a project, recognized construction practices and design standards can be used.

1-3. References.

Appendix A contains a list of references used in this manual.

1-4. Noise Estimates.

Noise level estimates have been derived for various types of mechanical equipment, and in some cases graded for power or speed variations of the noise-producing machines. The noise level estimates quoted in the manual are typically a few decibels above the average. Therefore, these noise level estimates should result in noise control designs that will adequately “protect” approximately 80 to 90 percent of all equipment. It is uneconomical to design mechanical equipment spaces to protect against the noise of all the noisiest possible equipment; such overdesign would require thicker and heavier walls and floors than required by most of the equipment. The noise estimates and the noise control designs presented may be used with reasonable confidence for most general purposes. Data and recommendations are given for mechanical equipment installations on-grade and in upper-floor locations of steel and concrete buildings. Though they can also be applied to equipment located in upper floors of buildings on all-wood construction, the low mass of such structures for the support of heavy equipment will yield higher noise and vibration levels than would normally be desired. Data and recommendations are also given for the analysis of noise in the surrounding neighborhood caused by mechanical equipment, such as cooling towers. On-site power plants driven by reciprocating and gas turbine engines have specific sound and vibration problems, which are considered separately in the manual TM 5-805-9/AFM 88-20.

1-5. English Metric Units.

English units are used throughout this manual for conventional dimensions, such as length, volume, speed, weight, etc. Metric units are used in special applications where the United States has joined with the International Standards Organization (ISO) in defining certain acoustic standards, such as 20 micropascal as the reference base for sound pressure level.

1-6. Explanation of Abbreviations and Terms.

Abbreviations and terms used in this manual are explained in the glossary.

CHAPTER 2

NOISE AND VIBRATION CRITERIA

2-1. General.

This chapter includes data and discussions on generally acceptable indoor noise and vibration criteria for acceptable living and working environments. These criteria can be used to evaluate the suitability of existing indoor spaces and spaces under design.

2-2. Noise Criteria In Buildings.

Room Criteria (RC) and Noise Criteria (NC) are two widely recognized criteria used in the evaluation of the suitability of intrusive mechanical equipment noise into indoor occupied spaces. The Speech Interference Level (SIL) is used to evaluate the adverse effects of noise on speech communication.

a. NC curves. Figure 2-1 presents the NC curves. NC curves have been used to set or evaluate suitable indoor sound levels resulting from the operation of building mechanical equipment. These curves give sound pressure levels (SPLs) as a function of the octave frequency bands. The lowest NC curves define noise levels that are quiet enough for resting and sleeping, while the upper NC curves define rather noisy work areas where even speech communication becomes difficult and restricted. The curves within this total range may be used to set desired noise level goals for almost all normal indoor functional areas.

In a strict interpretation, the sound levels of the mechanical equipment or ventilation system under design should be equal to or be lower than the selected NC target curve in all octave bands in order to meet the design goal. In practice, however, an NC condition may be considered met if the sound levels in no more than one or two octave bands do not exceed the NC curve by more than one or two decibels.

b. Room criterion curves. Figure 2-2 presents the Room Criterion (RC) curves. RC curves, like NC curves, are currently being used to set or evaluate indoor sound levels resulting from the operation of mechanical equipment. The RC curves differ from the NC curves in three important respects. First, the low frequency range has been extended to include the 16 and 31.5 Hz octave bands. Secondly, the high frequency range at 2,000 and 4,000 Hz is significantly less permissive, and the 8,000 Hz octave band has been omitted since most mechanical equipment produces very little noise in this frequency region. And thirdly, the range over which the curves are defined is limited from RC 25 to RC 50 because; 1) applications below RC 25 are special purpose and expert consultation should be sought and; 2) spaces above RC 50 indicate little concern for the quality of the background sound and the NC curves become more applicable.

Table 2-1 lists representative applications of the RC curves. The evaluation of the RC curves is different than that for the NC curves. In general the sound levels in the octave bands from 250 to 2,000 Hz are lower than those of the NC curves. Should the octave band sound levels below 250 Hz be greater than the criteria a potential “rumble” problem is indicated. As a check on the relative rumble potential, the following procedure is recommended:

(1) Sum the sound pressure levels in the octave bands from 31.5 through 250 Hz on an energy basis (See app B).

(2) Sum the sound pressure levels in the octave bands from 500 through 4,000 Hz on an energy basis.

(3) Subtract the high frequency sum (step 2) from the low frequency sum (step 1).

(4) If the difference is +30 dB or greater, a positive subjective rating of rumble is expected, if the difference is between +25 and +30 dB a subjective rating of rumble is possible, if the difference is less than +20 dB a subjective rating of rumble is unlikely. Also indicated on the RC curves (fig 2-2) are two regions where low frequency sound, with the octave band levels indicated, can induce feelable vibration or audible rattling in light weight structures.

c. Speech interference levels. The speech interference level (SIL) of a noise is the arithmetic average of the SPLs of the noise in the 500-, 1000-, and 2000-Hz octave bands. The approximate conditions of speech communication between a speaker and listener can be estimated from table 2-2 when the SIL of the interfering noise is known. Table 2-2 provides “barely acceptable” speech intelligibility, which implies that a few words or syllables will not be understood but that the general sense of the discussion will be conveyed or that the listener will ask for a repetition of portions missed.

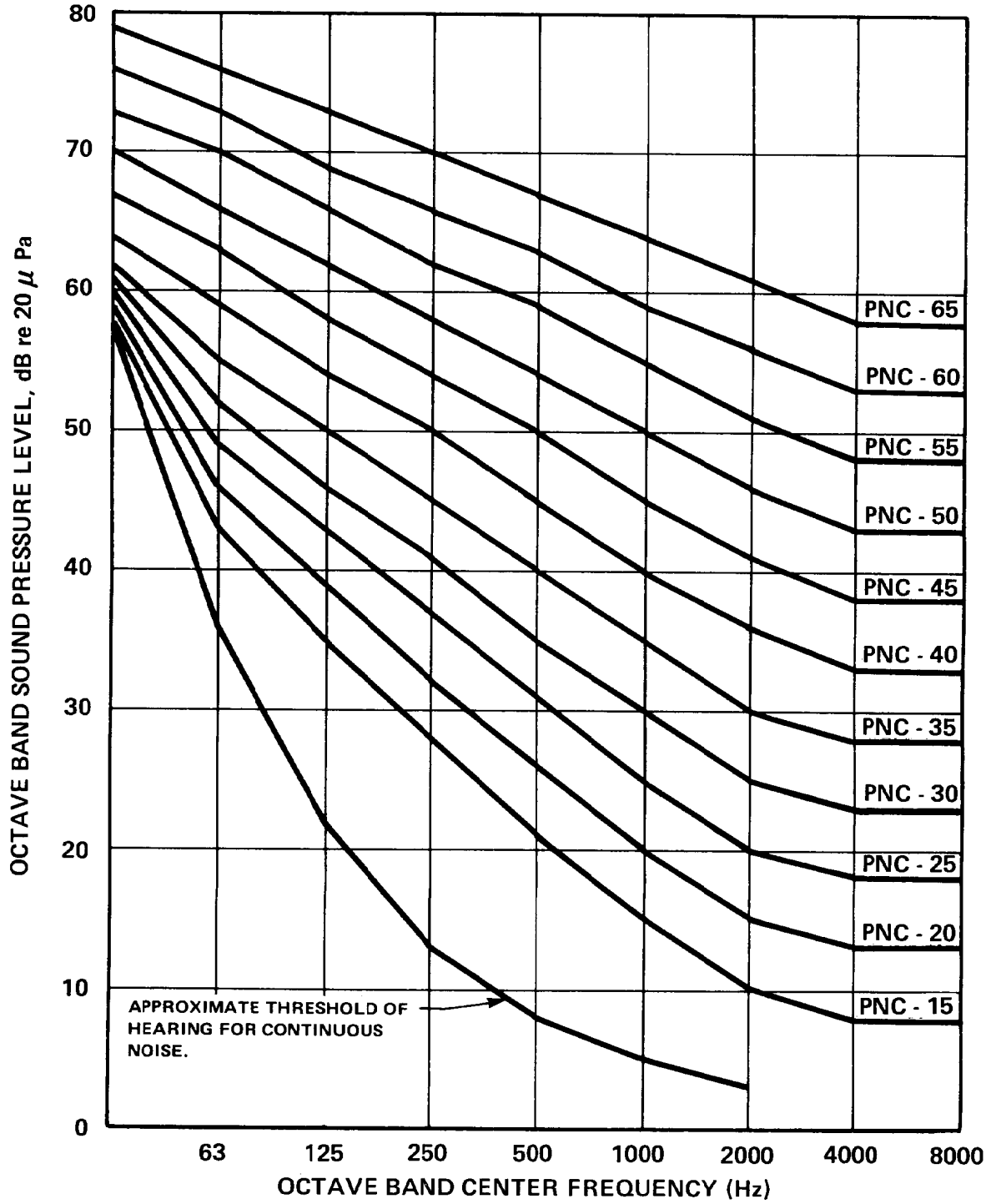

Reprinted with permission from
The 1987 ASHRAE Handbook,
HVAC Systems and Applications

Figure 2-1. Noise Criterion (NC) Curves.

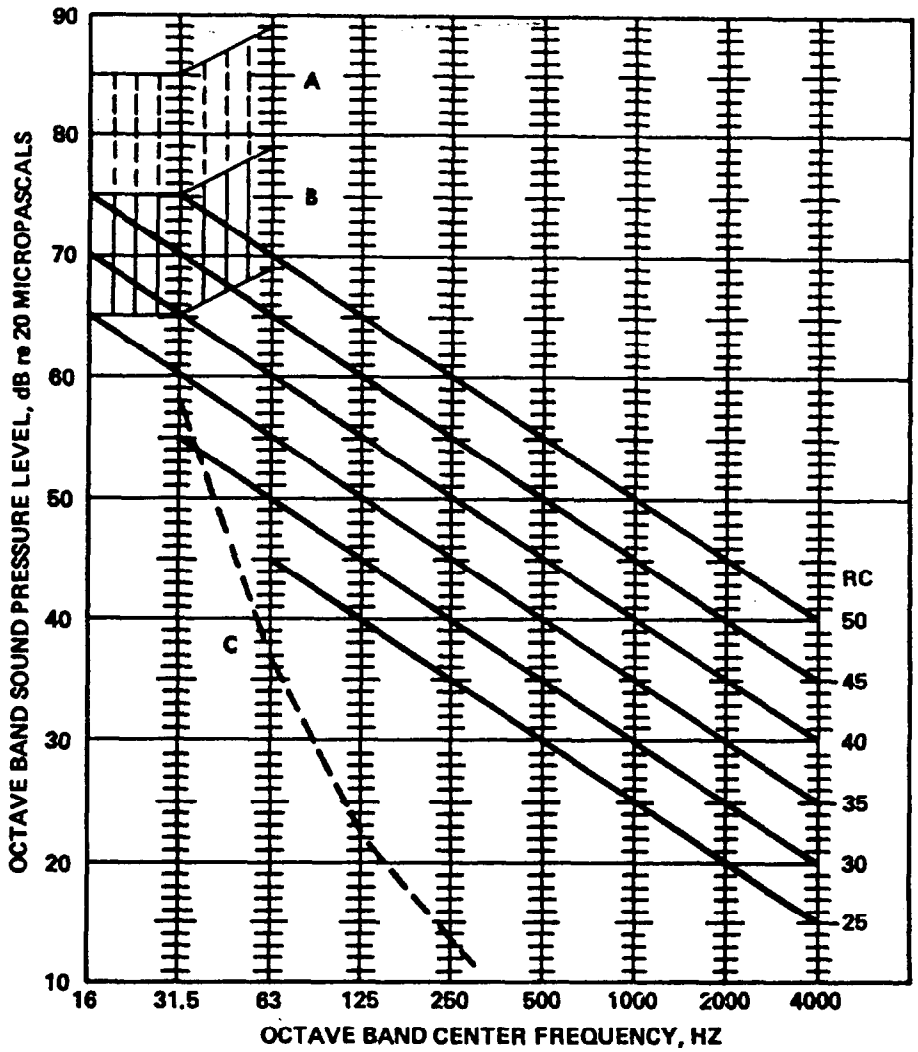

Region A: High probability that noise-induced vibration levels in lightweight wall and ceiling constructions will be clearly feelable; anticipate audible rattles in light fixtures, doors, windows, etc.
Region B: Noise-induced vibration levels in lightweight wall and ceiling constructions may be moderately feelable; slight possibility of rattles in light fixtures, doors, windows, etc.
Region C: Below threshold of hearing for continuous noise.

Reprinted with permission from
The 1987 ASHRAE Handbook,
HVAC Systems and Applications

Figure 2-2. Room Criterion (RC) Curves

The quality of telephone usage is related to SIL approximately as follows:

SIL Range (dB)	for Telephone Usage
30-45	Satisfactory
45-60	Slightly difficult
60-75	Difficult
Above 75	Unsatisfactory

d. Limitations. The indoor noise criteria considered above assume that the noise is almost continuous and of a fairly steady nature (not enough modulating or fluctuating up and down in level or frequency to attract attention), and there are no raucous, unpleasant sounds or strongly tonal sounds. If any of these assumptions are not met,

Table 2-1. Category Classification and Suggested Noise Criterion Range for Intruding Steady-State Noise as Heard in Various Indoor Functional Activity Areas.

Category	Area (and Acoustic Requirements)	Noise Criterion[a]
1	Bedrooms, sleeping quarters, hospitals, residences, apartments, hotels, motels, etc. (for sleeping, resting, relaxing).	NC-20 to NC-30
2	Auditoriums, theaters, large meeting rooms, large conference rooms, radio studios, churches, chapels, etc. (for very good listening conditions).	NC-15 to NC-30
3	Private offices, small conference rooms, classrooms, libraries, etc. (for good listening conditions).	NC-30 to NC-35
4	Large offices, reception areas, retail shops and stores, cafeterias, restaurants, etc. (for fair listening conditions).	NC-35 to NC-40
5	Lobbies, drafting and engineering rooms, laboratory work spaces, maintenance shops such as for electrical equipment,etc. (for moderately fair listening conditions).	NC-40 to NC-50
6	Kitchens, laundries, shops, garages, machinery spaces, power plant control rooms, etc. (for minimum acceptable speech communication, no risk of hearing damage).	NC-45 to NC-65

the sound level criteria should be even lower than the criteria normally considered applicable. This criteria given above is intended to be illustrative; any occupied or habitable area not identified in the list can be assigned to one of these categories on the basis of similarity to the types of areas already listed. Generally, where a range of criteria is given, the lower values should be used for the more critical spaces in the category and for nonmilitary areas outside the control of the facility; the higher of the range of criteria may be used for the less critical spaces in the category. Certain short-term infrequent sounds (such as the weekly testing of a fire pump or an emergency power generator) may be allowed to exceed normal criteria in relatively noncritical areas as long as the normal functions of these areas are not seriously restricted by the increase in noise.

2-3. Vibration Criteria In Buildings.

Structural vibration in buildings, which results in feelable vibration, produces structural or superficial damage of building components or interferes with equipment operation is unacceptable. In addition large building components that vibrate can produce unacceptable sound levels.

a. Vibration criteria for occupants. Figure 2-3 shows the approximate occupant response to building vibration levels. An approximation of the "threshold of sensitivity" of individuals to feelable vibration is shown by the shaded area of figure 2-3, labeled "barely perceptible." Other typical responses of people to vibration are indicated by the other zones in figure 2-3. These reactions or interpretations may vary over a relatively wide range for different individuals and for different ways in which a person might be subjected to

Table 2-2. Speech Interference Levels (SIL) That Permit Barely Acceptable Speech Intelligibility at the Distances and Voice Levels Shown.

Distance (ft.)	Voice Level			
	Normal	Raised	Very Loud	Shouting
1/2	74	80	86	92
1	68	74	80	86
2	62	68	74	80
4	56	62	68	74
6	53	59	65	71
8	50	56	62	68
10	48	54	60	66
12	46	52	58	64
16	44	50	56	62

SIL is arithmetic average of noise levels in the 500-, 1000-, and 2000-Hz octave frequency bands. SIL values apply for average male voices (reduce values 5 dR for female voice), with speaker and listener facing each other, using unexpected work material. SIL values may be increased 5 dB when familiar material is spoken. Distances assume no nearby reflecting surface to aid the speech sounds.

vibration (standing, seated, through the finger tips). The lower portion of the "barely perceptible" range is most applicable to commercial installations. Complaints of building vibration in residential situations can arise even if the vibration levels are slightly below the lower portion of the "barely perceptible" range. The choice of a vibration criteria, for annoyance due to feelable vibration, will be determined by the usage of the space and the perceived sensitivity of the occupants. There should not be a problem with perceptible vibration if the levels are 6 to 8 dB below the "barely perceptible" range of figure 2-3.

b. Vibration Criteria for Building Structures. High amplitude vibration levels can cause damage to building structures and components. When vibration is destructive to building component the vibration will be highly perceptible to the building occupants. A structural vibration velocity of 2.0 in/sec has commonly been used as an upper safe limit for building structures, and vibrations above this value will have adverse environmental impact. A vibration velocity of 1.0 in/sec be used as a normally safe vibration upper limit with respect to structural damage. Vibrations with a velocity level greater than 1.0 in/sec should be avoided or special arrangements should be made with the owners of the exposed structure. Even with a vibration level of 1.0 in/sec superficial damage may occur in isolated instances. Superficial damage can consist of small cracking in brittle facades such as plaster. In order to ensure that the possibility of superficial damage is minimized a vibration criteria of 0.2 in/sec has been recommended. And finally for very old structures an even lower level of 0.05 in/sec is recommended. The manner in which the level is to be determined is a function of the type of vibration expected or experienced. For continuous vibration the RMS level should be used. For impulsive vibration the Peak value is to be used. See appendix B for a discussion of Peak and RMS vibration. On figure 2-4 the vibration limits mentioned above have been plotted in terms of acceleration level in dB re 1 micro G.

c. Vibration Criteria for Sensitive Equipment. Building vibration may be disturbing to the use or proper operation of vibration-sensitive equipment, such as electron microscopes and other special chemical, medical, or industrial instruments or processes. Figure 2-5 shows vibration criteria for some sensitive equipment types. To achieve these low level vibration levels special building construc-

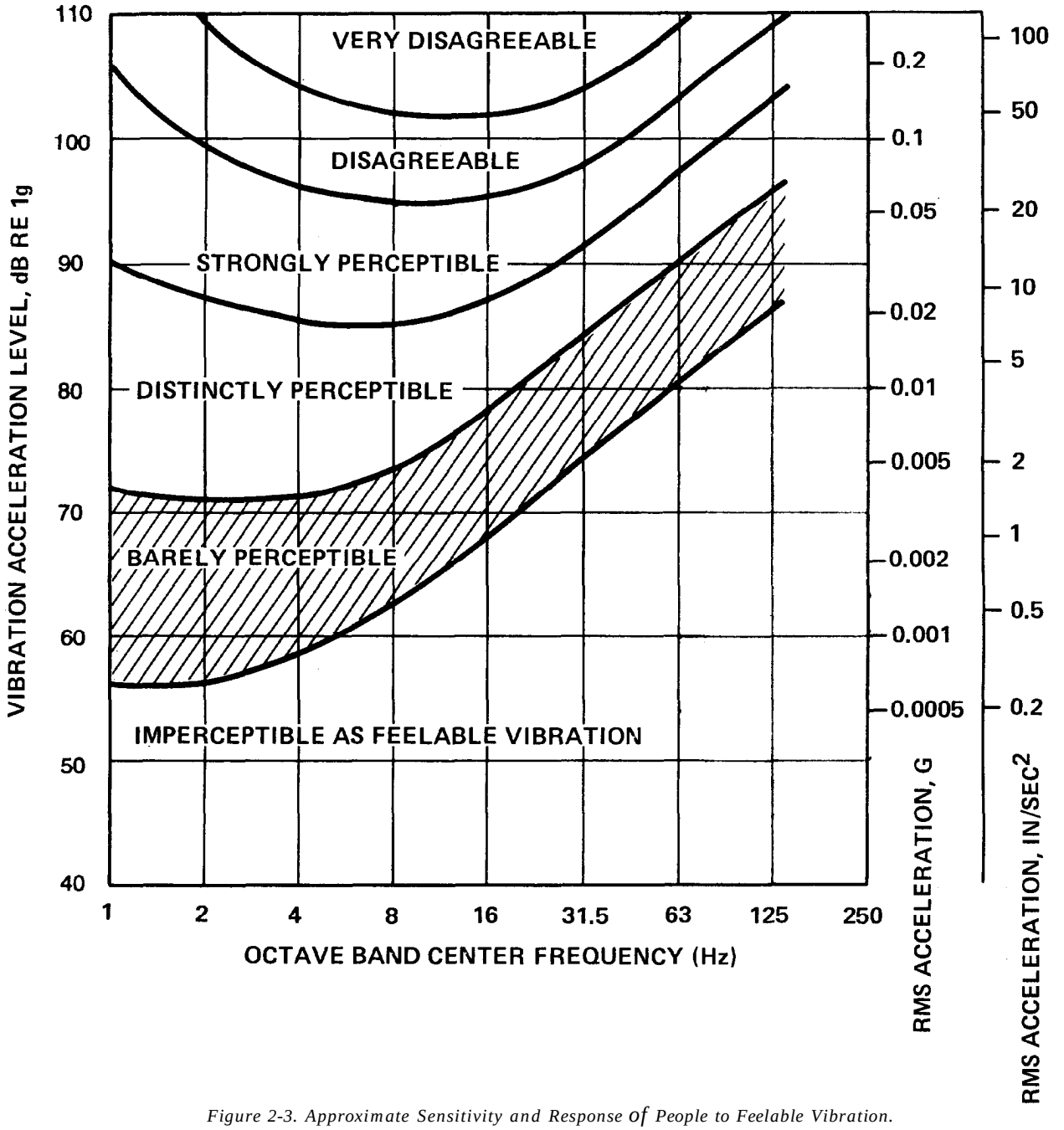

Figure 2-3. Approximate Sensitivity and Response of People to Feelable Vibration.

tion, mechanical equipment selection and isolation, and vibration isolation for the sensitive equipment are required.

d. Vibration criteria for sound control. Vibrating building components will produce sound radiation which may be unacceptable. Figure 2-6 shows "NC-equivalent" sound level curves as a function of acceleration level of a large surface. These NC-equivalent curves show the vibration acceleration levels of a large vibrating surface (such as a wall, floor, or ceiling of a room> that will produce radiated sound having approximately the octave band sound pressure levels of the NC curves (shown earlier in figure 2-1).

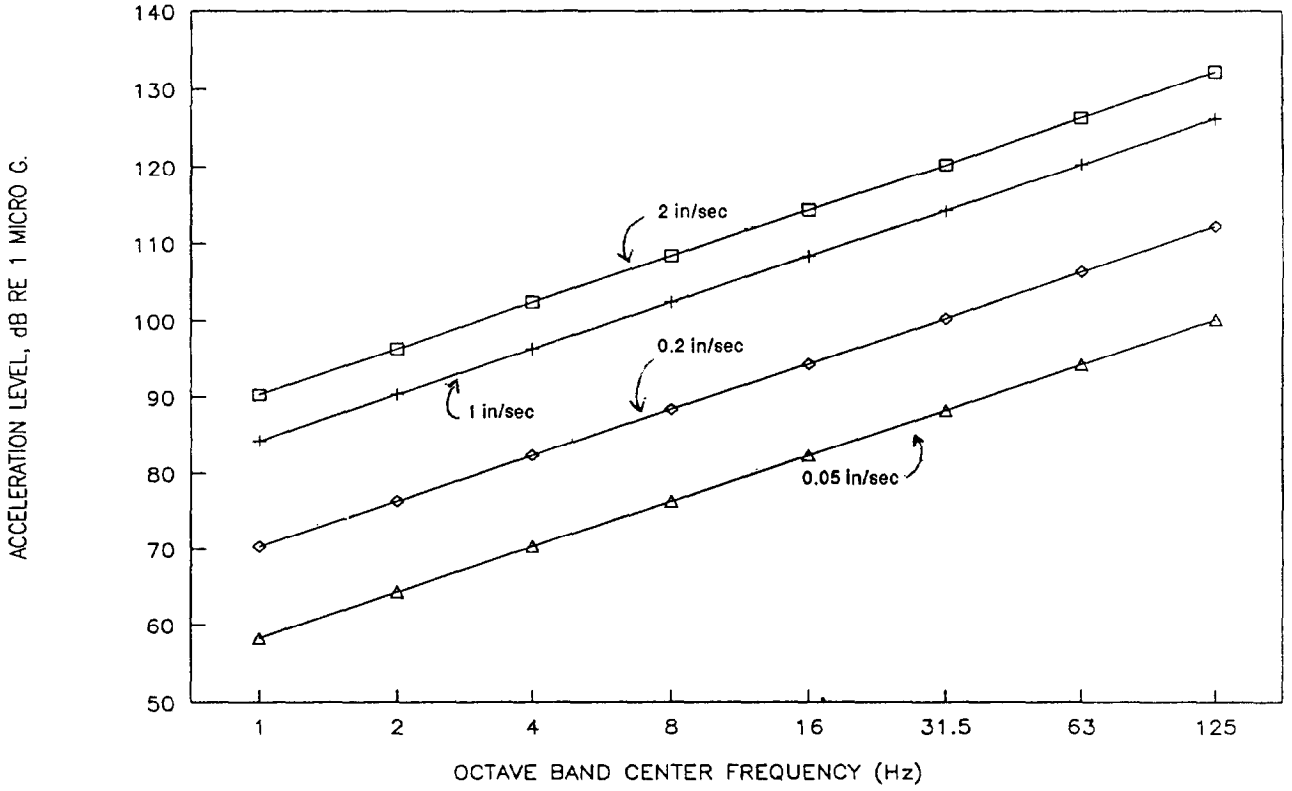

Figure 2-4. Vibration Criteria for Damage Risk to Buildings.

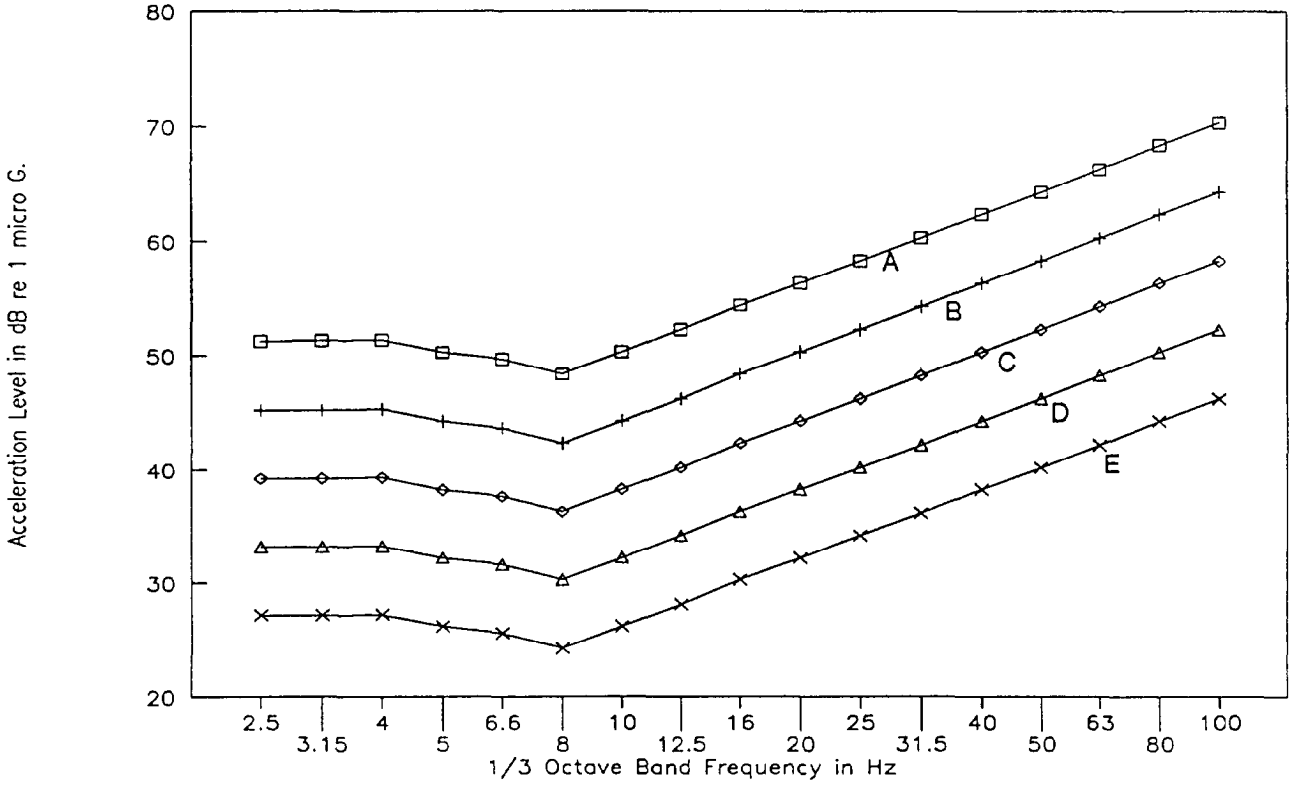

Note -

A - 100 X Microscopes.
B - 500 X Microscopes.
C - 1,000 X Microscopes.
D - Electron Beam Mircoscopes to 0.3 micrometer geometries.
E - Anticipated Adequate for future low submicron geometries.

Figure 2-5. Vibration Criteria for Sensitive Equipment in Buildings.

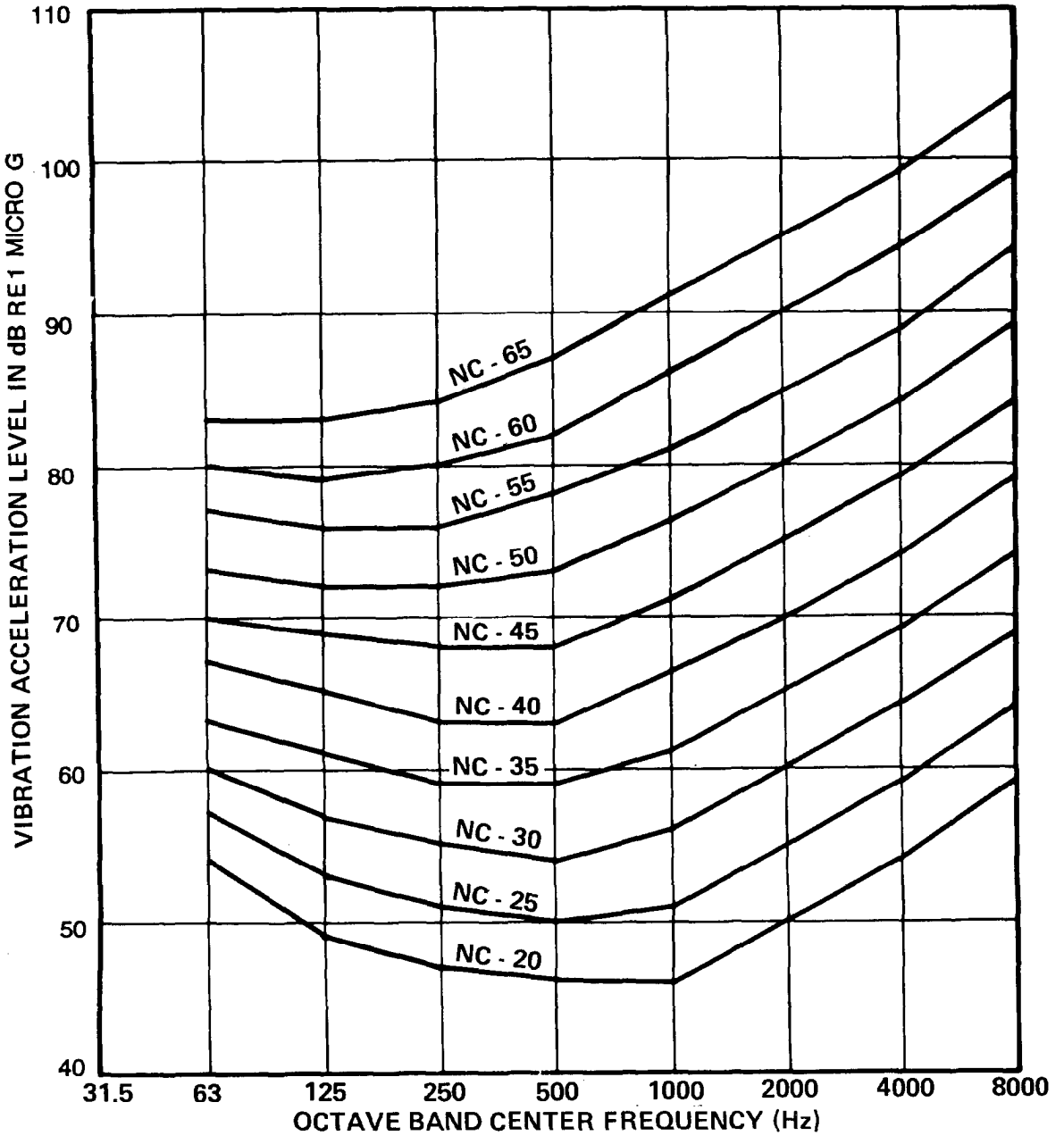

Figure 2-6. Vibration Acceleration Levels of a Large Vibrating Surface that Will Produce Radiated Sound Levels Into a Room Approximating the Sound Levels of the NC Curves.

CHAPTER 3

SOUND DISTRIBUTION INDOORS

3-1. General.

This chapter provides data and procedures for determining sound pressure levels in enclosed rooms due to sources of sound contained within the room.

3-2. Sound Pressure level In A Room.

The sound pressure levels at a given distance or the sound power levels for individual equipment items can often be obtained from equipment suppliers. Appendix C also provides sound level and power level estimates for general classes of mechanical equipment. Once the characteristics of the sound source has been determined, then the sound level at any location within an enclosed space can be estimated. In an outdoor "free field" (no reflecting surfaces except the ground), the sound pressure level (SPL) decreases at a rate of 6 dB for each doubling of distance from the source. In an indoor situation, however, all the enclosing surfaces of a room confine the sound energy so that they cannot spread out indefinitely and become dissipated with distance. As sound waves bounce around within the room, there is a build-up of sound level because the sound energy is "trapped" inside the room and escapes slowly.

a. Effect of distance and absorption. The reduction of sound pressure level indoors, as one moves across the room away from the sound source, is dependent on the surface areas of the room, the amount of sound absorption material on those areas, the distances to those areas, and the distance from the source. All of this is expressed quantitatively by the curves of figure 3-1. Figure 3-1 offers a means of estimating the amount of SPL reduction for a piece of mechanical equipment (or any other type of sound source> in a room, as one moves away from some relatively close-in distance to any other distance in the room, provided the sound absorptive properties of the room (Room Constant) is known. Conversely figure 3-1 also provides a means of estimating the sound reduction in a room, from a given source, if the distance is constant and the amount of absorptive treatment is increased.

b. General application of figure 3-1. Figure 3-1 may be used for estimating SPL change from any given condition of Room Constant and distance to any other wanted condition of Room Constant and distance. This can be expressed by equation 3-1:

$$L_{pD2R2} = L_{pD1R1} - (\text{REL SPL}_{D1R1} - \text{REL SPL}_{D2R2}) \qquad \text{(eq 3–1)}$$

where D_1 and R_1 are the distance (in feet) and Room Constant (in ft.^{2}) values for the measured or known sound pressure level L_{pD1Rl}; D_2 and R_2 are the distance and Room Constant values for the new set of conditions for which the new sound pressure level L_{pD2R2} is wanted; and REL SPL_{DIRl} and REL SPL_{D2R2} (in dB) are read from the ordinate (vertical axis) of figure 3-1 for the specific combinations of D_1, R_1 and D_2, R_2. For estimating SPL change when only the Room Constant is changed and there is no change of distance (i.e., the equipment distance remains constant), the same distance value for D_1 and D_2 is used and the equation is solved. For estimating SPL change when only the distance is changed and there is no change in Room Constant (i.e., the equipment remains in the same room, with no change in absorption), the same value of Room Constant for R_1 and R_2 is used and the equation is solved. For a complete analysis, the calculations must be carried out for each octave frequency band.

c. Simplified table for SPL correction for distance and room constant. Table 3-1 represents a simplification of figure 3-1 for a special condition of distance and room constant. Much of the collection of equipment sound data in appendix C is given in terms of SPL at a normalized distance of 3 feet and a normalized room constant of approximately 800 ft.^{2} Table 3-5 permits extrapolation from those normalized 3-foot SPLs to some greater distance for a variety of different Room Constants. Table 3-1 must not be used in converting sound power level (PWL) data to sound pressure level (see equation 3-2 and table 3-2).

d. SPL in a room when PWL is known. The second major use of figure 3-1 is in determining the SPL in a room when the sound power level of the source is known. Equation 3-2 provides this.

$$L_{pD,R} = Lw + \text{REL SPL}_{D,R} \qquad \text{(eq 3-2)}$$

where $L_{pD,R}$ is the SPL to be determined at distance D in the room of Room Constant R, Lw the sound power level of the source (in dB re 10^{-12}W) and REL $SPL_{D,R}$ is read from the ordinate of figure 3-1 for the point of intersection of the D and R values specified. In most uses, the value of REL $SPL_{D,R}$ will be negative, so this amounts to a subtraction function. Hence, the signs must be followed carefully. The calculation is repeated for each octave band.

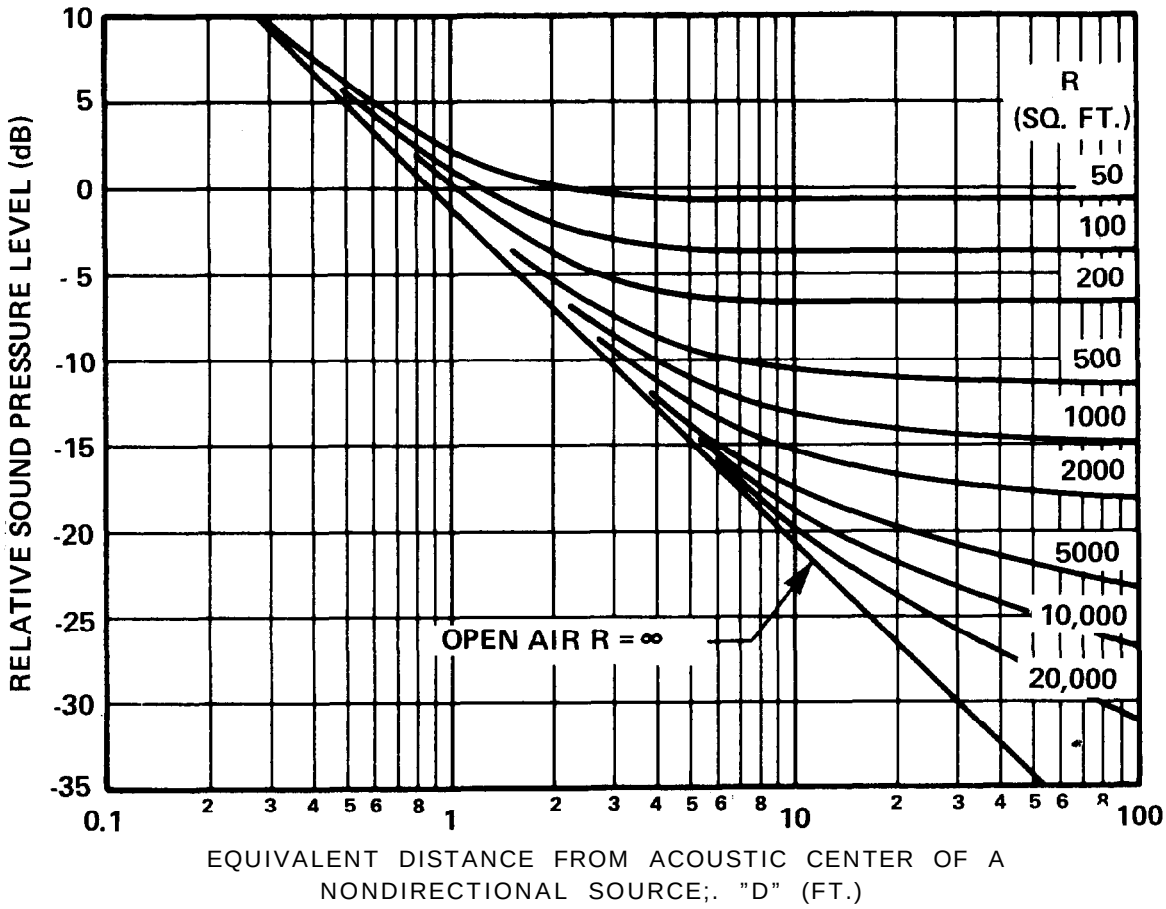

Note: This figure has been adjusted to take into account large obstacles or large pieces of equipment distributed about the room. Therefore, the curves for large values of R do not agree with similar textbook curves that tend to ignore such obstacles.

Figure 3-1. Approximate Relationship Between "Relative Sound Pressure Level" (REL SPL) and Distance to a Sound Source for Various "Room Constant" values.

e. Simplified table PWL to SPL. As a convenience, table 3-2 presents the REL SPL data of figure 3-1 for a number of distance and Room Constant values. This table is for use only in calculating SPL from PWL; it does not give the difference between two REL SPL values, as is given in table 3-1.

3-3. Room Constant.

a. Calculation of room constant. The room constant is a measure of the amount of sound absorption that exists within a room. Most current acoustic textbooks give details of a conventional calculation of the Room Constant for any specific room, when the following facts are known: (1) all the room dimensions, (2) the wall, floor, and ceiling materials, (3) the amount and type of acoustic absorption materials, and (4) the sound absorption coefficients of the acoustic- materials at various specified frequencies. The calculation is summarized in equation 3-3:

$$R = S_1 \alpha_1 + S_2\alpha_2 + S_3\alpha_3 + \ldots + S_n\alpha_n \qquad \text{(eq 3–3)}$$

where R is the Room Constant (or "room absorption" as it is often called), S1 is the total area of all the room surfaces having "sound absorption coefficients" α_1; S2 is the total area of all the room surfaces having sound absorption coefficient α_2; etc. The areas S1, . . .Sn are expressed in ft.2, and the sound absorption coefficients (α's) are dimensionless. The resulting Room Constant R is also expressed in ft2 The term "sabin" is used in the literature as a unit of room absorption or Room Constant, where one sabin is the absorption provided by 1 ft^2 of material having perfect absorption; i.e., α having a value of 1.0. In the manual, 1 ft^2 of absorption and 1 sabin are used synonymously.

Table 3-1. Reduction of SPL in (dB) in Going from Normalized 3-ft.. Distance and 800-ft.^{2} Room Constant to Any Other Distance and Room Constant.

Room Constant "R" (ft.^{2})	Distance "D" (in ft.) from Equipment								
	3	5	10	15	20	30	40	60	80
100	-5	-4	-4	-4	-4	-4	-4	-4	-4
200	-3	-2	-1	-1	-1	-1	-1	-1	-1
320	-2	0	0	0	0	0	0	0	0
500	-1	1	2	3	3	3	4	4	4
700	0	2	4	4	5	5	6	6	6
1000	1	3	5	6	7	7	8	0	0
2000	1	4	7	0	9	9	10	10	10
3200	2	5	0	9	10	11	12	12	12
5000	2	6	9	11	12	13	14	14	15
7000	2	6	10	12	13	14	15	15	16
10000	2	7	11	13	14	15	16	17	10
20000	2	7	12	14	16	18	19	21	22
Infinite	2	7	13	16	19	22	25	20	31

Note: Negative value of reduction means an Increase in sound level.

b. Sound absorption coefficients. For most surfaces and materials, the sound absorption coefficients vary with frequency; hence the Room Constant must be calculated for all frequencies of interest. Even room surfaces that are not normally considered absorptive have small amounts of absorption. Table 5-1 gives the published sound absorption coefficients of typical building materials. Usually sound absorption coefficients are not measured in the 31, 63 and 8,000 Hz frequencies. Where the data at these frequencies are not available use 40% of the value of the 125 Hz for the 31 Hz band, 70% of the 125 Hz value for the 63 Hz band and 80% of the 4,000 value for the 8,000 Hz octave band. Values of sound absorption coefficients for specialized acoustical materials must be obtained from the manufacturer.

c. Estimation of room constant. In the early stages of a design, some of the details of a room may not be finally determined, yet it may be necessary to proceed with certain portions of the design. An approximation of the Room Constant can be made using figure 3-2 and table 3-4. The basic room dimensions are required but it is not necessary to have made all the decisions on side wall, floor, and ceiling materials. This simplification yields a less accurate estimate than does the more detailed procedure, but it permits rapid estimates of the Room Constant with gross, but nonspecific, changes in room materials and sound absorption applications. Then, when a favored condition is found, detailed calculations can be made with equation 3-1.

d. Use of figure 3-2. Figure 3-2 gives a broad relationship between the volume of a typically shaped room and the Room Constant as a function of the percentage of room area that is covered by sound absorption material. Room area means the total interior surface area of floor, ceiling, and all side walls. The Room Constant values obtained from this chart strictly apply at 1000 Hz, but in this simplified procedure are considered applicable for the 2000- through 8000-Hz bands as well.

e. Use of table 3-3, part A. Sound absorption materials are less effective at low frequency (at and below 500 Hz) than at high frequency (at and

Table 3-2. REL SPL Values for a Range of Distances "D" and Room Constants "R", for Use With PWL Data.

Room Constant "R" ($ft.^2$)	Distance "D" (in ft.) from Equipment								
	3	5	10	15	20	30	40	60	80
100	-3	-4	-4	-4	-4	-4	-4	-4	-4
200	-5	-6	-7	-7	-7	-7	-7	-7	-7
320	-6	-7	-8	-8	-9	-9	-9	-9	-9
500	-7	-9	-10	-11	-11	-11	-11	-11	-11
700	-8	-10	-12	-12	-12	-13	-13	-13	-13
1000	-8	-11	-13	-13	-14	-14	-15	-15	-15
2000	-9	-12	-15	-16	-17	-17	-17	-18	-18
3200	-10	-13	-16	-17	-18	-19	-19	-20	-20
5000	-10	-14	-17	-18	-20	-21	-21	-22	-23
7000	-10	-14	-16	-19	-21	-22	-23	-24	-25
10000	-10	-14	-19	-21	-22	-23	-24	-25	-26
20000	-10	-15	-20	-22	-24	-26	-27	-30	-30
Infinite	-10	-15	-21	-24	-27	-30	-33	-36	-39

above 1000 Hz). Therefore, the high-frequency Room Constant obtained from figure 3-2 must be reduced to apply to the lower frequencies. Part A of table 3-3 gives a multiplier for doing this. This multiplier is a function of frequency, Noise Reduction Coefficient (NRC) range of any special sound absorption material, and the mounting type for installing the absorption material. The Noise Reduction Coefficient is the arithmetic average of the sound absorption coefficient at 250, 500, 1,000 and 2,000 Hz. Mounting type A consists of application sound absorptive material applied directly onto a hard backing such as a wall or ceiling. Mounting type B consists of sound absorptive material mechanically supported with a large air space behind the material, such as a typical suspended ceiling.

f. Use of Table 3-3, part B. Relatively thin wall materials (such as gypsum board, plaster, plywood, and glass), even though not normally considered as soft, porous, and absorptive, actually have relatively large values of sound absorption coefficient at low frequency. This is because these thin surfaces are lightweight and are easily driven by airborne sound waves. For this reason they appear as effective sound absorbers at low frequency, and this characteristic should be taken into account in the calculation or estimation of Room Constant. Part B of table 3-3 gives a multiplier for doing this.

3-4. Sample Calculations.

Two sample calculations are provided, one in which the sound pressure level (SPL) for the equipment is provided and one where the sound power level (PWL) is provided.

a. Sound pressure level provided. To illustrate use of equation 3-2, a piece of equipment is measured by a manufacturer under one set of conditions and is to be used by the customer under an entirely different set of conditions. The data and calculations are summarized in table 3-5. The manufacturer's measurements, shown in column 2, are made at a 6-foot distance from the equipment (here assumed nondirectional, that is, equal sound output in all directions) in a room whose Room Constants as a function of frequency are shown in column 3 of table 3-4. The customer is interested in the sound pressure levels at a 20-foot distance in a mechanical equipment room having the Room Constant values shown in column 5. In applying equation 3-2, D_1 = 6 ft., D_2 = 20 ft., R_1 is given by the column 3 data, R_2 is given in column 5, and the measured levels are listed in column 2. First, figure 3-1 is used to estimate the REL SPL_{D1R1}

Materials	Coefficients					
	125 Hz	250 Hz	500 Hz	1000 Hz	2000 Hz	4000 Hz
Brick, unglazed	.03	.03	.03	.04	.05	.07
Brick, unglazed, painted	.01	.01	.02	.02	.02	.03
Carpet, heavy, on concrete	.02	.06	.14	.37	.60	.65
Same, on 40 oz hairfelt or foam rubber	.08	.24	.57	.69	.71	.73
Same, with impermeable latex backing on 40 oz hairfelt or foam rubber	.08	.27	.39	.34	.48	.63
Concrete Block, light, porous	.36	.44	.31	.29	.39	.25
Concrete Block, dense, painted	.10	.05	.06	.07	.09	.08
Fabrics						
Light velour, 10 oz per sq yd, hung straight, in contact with wall	.03	.04	.11	.17	.24	.35
Medium velour, 14 oz per sq yd, draped to half area	.07	.31	.49	.75	.70	.60
Heavy velour, 18 oz per sq yd, draped to half area	.14	.35	.55	.72	.70	.65
Floors						
Concrete or terrazzo	.01	.01	.015	~.02	.02	.02
Linoleum, asphalt, rubber or cork tile on concrete	.02	.03	.03	.03	.03	.02
Wood	.15	.11	.10	.07	.06	.07
Wood parquet in asphalt on concrete	.04	.04	.07	.06	.06	.07
Glass						
Large panes of heavy plate glass	.18	.06	.04	.03	.02	.02
Ordinary window glass	.35	.25	.18	.12	.07	.04
Gypsum Board, 1/2-in. nailed to 2×4's 16-in. o.c.	.29	.10	.05	.04	.07	.09
Marble or Glazed Tile	.01	.01	.01	.01	.02	.02
Plaster, gypsum or lime, smooth finish on tile or brick	.013	.015	.02	.03	.04	.05
Plaster, gypsum or lime, rough finish on lath	.14	.10	.06	.05	.04	.03
Same, with smooth finish	.14	.10	.06	.04	.04	.03
Plywood Paneling, 3/8-in. thick	.28	.22	.17	.09	.10	.11
Water Surface, as in a swimming pool	.008	.008	.013	.015	.020	.025
Air, Sabins per 1000 cubic feet	.09	.20	.49	1.2	2.9	7.4

Absorption of Seats and Audience

Values given are in Sabins per square foot of seating area or per unit

	125 Hz	250 Hz	500 Hz	1000 Hz	2000 Hz	4000 Hz
Chairs, metal or wood seats, each, unoccupied	.15	.19	.22	.39	.38	.30
People in a room, per person (do not use for auditorium calculations)	2	3	4	5	5	4
Audience, seated in upholstered seats, per ft^2 of floor area, for auditorium calculations	.60	.74	.88	.96	.93	.85

Figure 3-2. Room Constant Estimate

Table 3-3. Sound Absorption Coefficients of General Building Materials and Furnishings.

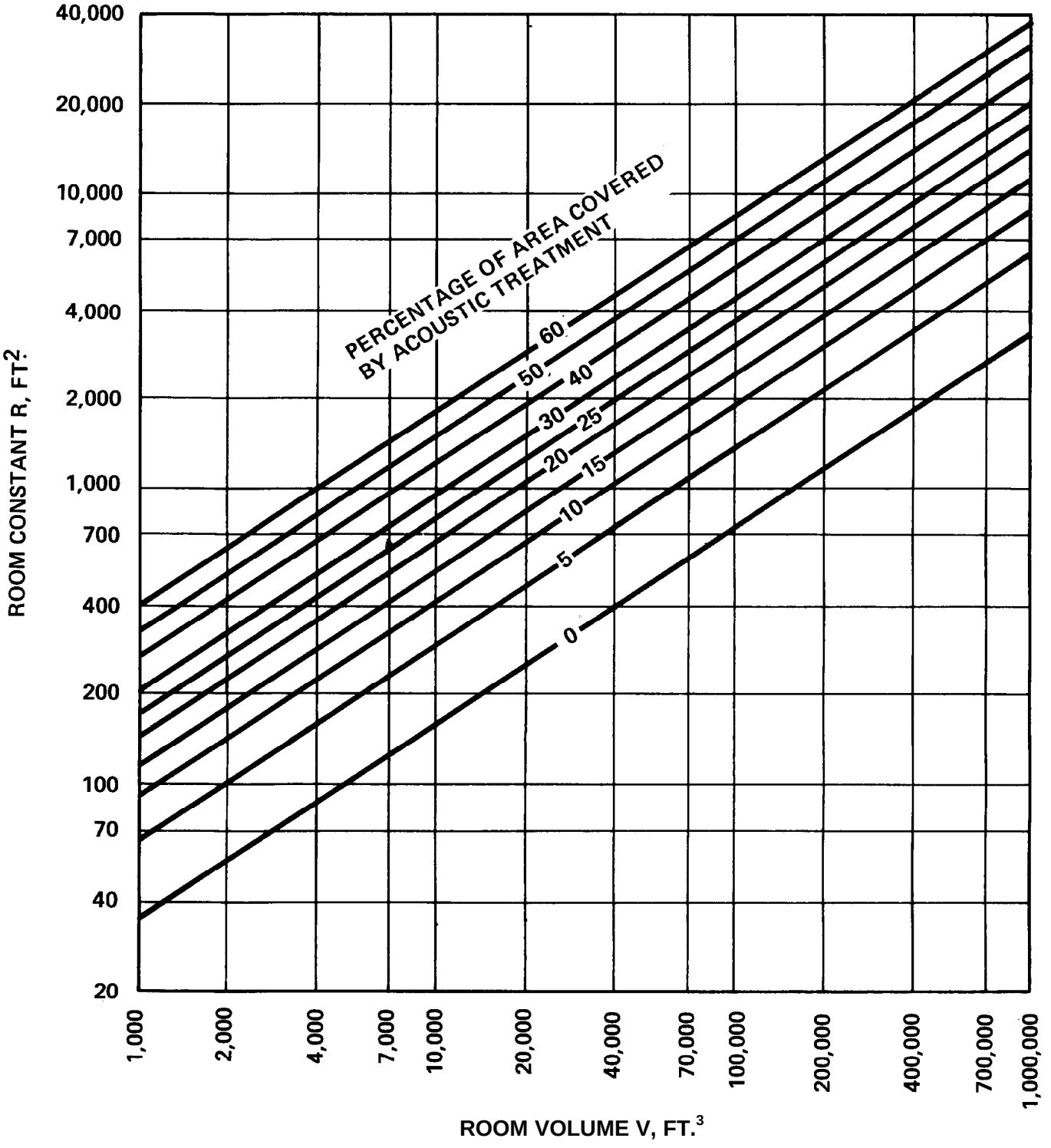

From Bolt Beranek and Newman Inc.
Used with permission.

values for the 6-ft. distance and all the column 3 values of R_1. These REL SPL values are given in column 4. Next, the REL SPL_{D2R2} values are estimated for the 20-foot distance and all the column 5 values of R_2. These REL SPL values are given in column 6. Column 7 shows the value of the difference (REL SPL_{D1Rl} - REL SPL_{D2R2}); it is necessary here to be extremely careful to preserve the correct signs. Finally, column 8 gives the value of SPL at D_2, R_2, which is equal to the column 2 value minus the column 7 value, again, being careful with the signs. To check the calculations, one should go back to figure 5-1 and follow one specific conversion, such as the 1000-Hz change of conditions. A pencil mark is placed at the junction of D_1 = 6 ft. and R_1 = 500 ft.^{2}, and it is noted that the measured SPL was 91 dB for that condition. Now, as one moves out to the junction of D_2 = 20 ft. and R_2 = 1200 ft.^{2}, it is observed that there is a movement down the graph by 5 dB. This means there is a reduction of 5 dB from the initial condition of 91 dB. Therefore, the end condition should be 91 - 5 = 86 dB, which is confirmed in the column 8 of table 3-4 for the 1000-Hz octave band. Hint: When the net movement is down on figure 3-1, there is a reduction from "starting SPL" to "ending SPL"; when the net movement is up on figure 3-1, there is an increase from "starting SPL to ending SPL." For convenience in using figure 3-1, equation 3-2 is reproduced in the space above the graph on figure 3-1. It should be remembered that this equation is to be used when SPL is given for one set of conditions and SPL is wanted for another set of conditions.

b. Sound power level given. Suppose a manufacturer submits the PWL data given in column 2 of table 3-6 for a particular centrifugal compressor. An engineer intends to install this compressor in a room having the R values shown in column 3, and needs to know the SPL at a 20-foot distance. Column 4 shows the REL SPL values from figure 3-1 for the 20-foot distances and the various Room Constants. Column 5 then gives the calculated SPL values. For convenience to the user, equation 3-3 is also reproduced at the top of figure 3-1.

Table 3-4. Low Frequency Multipliers For Room Constants.

Octave Frequency Band (Hz)	Percent of Area of Thin Surfaces to Total Surface Area of Room							
	0	10	20	30	40	60	80	100
31	1	1.3	1.6	1.9	2.2	2.8	3.4	4.0
63	1	1.3	1.6	1.9	2.2	2.8	3.4	4.0
125	1	1.3	1.6	1.9	2.2	2.8	3.4	4.0
250	1	1.2	1.3	1.4	1.6	1.9	2.1	2.4
500	1	1.1	1.1	1.2	1.2	1.3	1.5	1.6

Table 3-5. Summary of Data and Calculations Illustrating Use of Equation 3-1.

Col. 1 Octave Band Center Frequency (Hz)	Col. 2 $L_{p_{D_1R_1}}$ Measured at 6 ft. Distance (dB)	Col. 3 R_1 of Measurement Room ($ft.^2$)	Col. 4 REL $SPL_{D_1R_1}$ from Fig. 5-1 (dB)	Col. 5 R_2 of Mechanical Equipment Room ($ft.^2$)	Col. 6 REL $SPL_{D_2R_2}$ from Fig. 5-1 (dB)	Col. 7 Col. 4 minus Col. 6 (dB)	Col. 8 $L_{p_{D_2R_2}}$ Col. 2 minus Col. 7 (dB)
31	81	350	-8	250	-7	-1	82
63	85	350	-8	250	-7	-1	86
125	87	400	-9	400	-10	+1	86
250	90	450	-9.5	750	-12.5	+3	87
500	96	480	-9.5	850	-13	+3.5	92
1000	91	500	-10	1200	-15	+5	86
2000	88	500	-10	1200	-15	+5	83
4000	83	500	-10	1200	-15	+5	78
8000	72	500	-10	1200	-15	+5	67

Table 3-6. Summary of Data and Calculations Illustrating Use of Equation 3-2.

Col. 1 Octave Band Center Frequency (Hz)	Col. 2 PWL of Source (dB)	Col. 3 Room Constant ($ft.^2$)	Col. 4 REL SPL from Fig. 5-1 (dB)	Col. 5 SPL at Distance (dB)
31	95	400	-10	85
63	93	600	-12	81
125	94	800	-13	81
250	95	1200	-15	80
500	99	1600	-16	83
1000	102	2000	-17	85
2000	108	2000	-17	91
4000	105	2000	-17	88
8000	94	2000	-17	77

CHAPTER 4

SOUND ISOLATION BETWEEN ROOMS

4-1. Objective.

This chapter provides data and procedures for estimating the changes in sound levels as one follows the "energy flow" path from a sound source to a receiver, through building components, such as walls, floors, doors etc. First, the sound pressure levels in the room containing the source drop off as one moves away from the source as described in chapter 3. Then, at the walls of the room, some sound is absorbed, some is reflected back into the room, and some is transmitted by the walls into the adjoining rooms (this also occurs at the floor and ceiling surfaces). The combined effects of this absorption, reflection, and transmission are the subject of this chapter.

4-2. Sound Transmission Loss (TL), Noise Reduction (NR) And Sound Transmission Class (STC).

With the knowledge of the acoustical isolation provided by walls and floors, it is possible to select materials and designs to limit noise intrusion from adjacent mechanical equipment rooms to acceptable levels. The degree of sound that is transmitted is influenced by the noise isolation properties of the demising construction, the area of the demising wall, floor or ceiling and the acoustical properties in the quiet room.

a. Transmission loss (TL) of walls. The TL of a wall is the ratio, expressed in decibels, of the sound intensity transmitted through the wall to the airborne sound intensity incident upon the wall. Thus, the TL of a wall is a performance characteristic that is entirely a function of the wall weight, material and construction, and its numerical value is not influenced by the acoustic environment on either side of the wall or the area of the wall. Procedures for determining transmission loss in the laboratory are given in ASTM E 90. This is the data usually given in most manufacturers literature and in acoustic handbooks. Laboratory ratings are rarely achieved in field installations. Transmission loss values in the laboratory are usually greater, by 4 to 5 dB, than that which can be realized in the field even when good construction practices are observed. ASTM E 336 is a corresponding standard method for determination of sound isolation in buildings (in situ). The approximate transmission loss or "TL" values, expressed in dB, of a number of typical wall construction materials are given in the tables of section 4-3. There are many other references that provide transmission loss performance for building materials. In addition many manufactures also provide transmission loss for their products.

(1) *"Suggested" vs "ideal" TL values.* In several of the tables of sections 4-3 and 4-4, two sets of TL data are given. The first is labeled "suggested design values," and the second is headed "ideal values." With good design and workmanship, the "suggested design values" can be expected. The "ideal values" are perhaps the highest values that can be achieved if every effort, in both design and execution, is made to assure a good installation, including control of all possible flanking paths of sound and vibration. The "suggested design values" are 1 to 3 dB low the "ideal values" in the low-frequency region and as much as 10 to 15 dB lower in the high-frequency region. When walls have ideal TL values as high as 60 to 70 dB, even the slightest leakage or flanking can seriously reduce the TL in the high-frequency region.

(2) *TL of other materials and fabricated partitions.* Because of the increasing need for good sound isolation in building design, many manufacturers are producing modular wall panels, movable partitions, folding curtains, and other forms of acoustic separators. When inquiring about these products, it is desirable to request their transmission loss data and to determine the testing facility where the product was evaluated (i.e. laboratory vs field, and the standard employed).

(3) *Estimated TL of untested partitions.* For estimations of the TL of an untested partition, its average surface weight (in lb./ft.^{2}) and its basic structural form should be determined. Then, the range of approximate TL values for partitions of similar weight and structure should be obtained.

b. "Noise reduction" (NR) of a wall. When sound is transmitted from one room (the "source room") to an adjoining room (the "receiving room"), it is the transmitted sound power that is of interest. The transmission loss of a wall is a performance characteristic of the wall structure, but the total sound power transmitted by the wall is also a function of its area (e.g. the larger the area, the more the transmitted sound power). The Room Constant of the receiving room also influences the SPL in the receiving room. A large Room Constant reduces the reverberant sound level in the room at an appropriate distance from the wall. Thus, three

factors influence the SPL in a receiving room: the TL of the wall, the area SW of the common wall between the source and receiving rooms, and the Room Constant R_2 of the receiving room. These three factors are combined in equation 4-1:

$$L_{p2} = L_{p1} - TL + 10 \log (1/4 + S_W/R_2) \quad \text{(eq 4-l)}$$

were L_{p1} is the SPL near the wall in the source room, and L_{p2} is the estimated SPL in the receiving room at a distance from the wall approximately equal to 75 percent of the smaller dimension (length or height) of the wall. The "noise reduction" (NR) of a wall is the difference between L_{p1} and L_{p2}; therefore,

$$NR + TL - 10 \log (1/4 + S_W/R_2) = T L + C \quad \text{(eq 4-2)}$$

where

$$c = -10 \log (1/4 + S_W/R_2) \quad \text{(eq 4-3)}$$

In the manual, C is called the "wall correction term" and its value is given in table 4-1 for a range of values of the ratio S_W/R_2. Both S_W and R_2 are expressed in ft^2, so the ratio is dimensionless. When NR is known for the particular wall and room geometry, equation 4-1 becomes

$$L_{p2} + L_{p1} - NR \quad \text{(eq 4-4)}$$

The SPL at any distance from the wall of the receiving room can be determined by using figure 3-1, and extrapolating from the "starting distance" (75 percent of the smaller dimension of the wall) to any other desired distance for the particular R_2 value.

c. TLc of composite structures. When a wall is made up of two or more different constructions, each with its own set of TL values, the effective transmission loss of the composite wall (TLc) can be calculated. The transmission coefficient "t", of each construction, is the ratio of the transmitted acoustic power to the incident acoustic power and is related to TL by equations 4-5.

$$t = 1/(10^{(0.1 \times TL)}) \quad \text{(eq 4-5)}$$

Once the transmission coefficient of each of the individual constructions has been determined then the composite transmission loss can be determined by equation 4-6.

$$TL_c = 10 \log [S_1 + S_2 + S_3 + \ldots)/(S_1t_1 + S_2t_2 + S_3t_3 + \ldots)] \quad \text{(eq 4-6)}$$

Where S_1 is the surface area of the basic wall having transmission loss TL_1, S_2 is the surface area of a second section (such as a door) having TL_2, S_3 is the surface area of a third section (such as a window) having TL_3, and so on. Since the transmission loss is different depending on the frequency, this calculation must be repeated for each octave band of interest.

d. "Sound transmission class" (STC). Current architectural acoustics literature refers to the term "Sound Transmission Class" (STC). This is a one-number weighting of transmission losses at many frequencies. The STC rating is used to rate partitions, doors, windows, and other acoustic dividers in terms of their relative ability to provide privacy against intrusion of speech or similar type sounds. This one-number rating system is heavily weighted in the 500- to 2000-Hz frequency region. Its use is not recommended for mechanical equipment noise, whose principal intruding frequencies are lower than the 500- to 2000 Hz region. However, manufacturers who quote STC ratings should

Table 4-1. Wall or Floor Correction Term "C" for Use in the Equation NR = TL + "C".

(Select nearest integral value of C)

Ratio S_W/R_2	"C" (dB)	Ratio S_W/R_2	"C" (dB)	Ratio S_W/R_2	"C" (dB)
0.00	+6	1.7	-3	15	-12
0.07	+5	2.2	-4	20	-13
0.15	+4	2.9	-5	25	-14
0.25	+3	3.7	-6	31	-15
0.38	+2	4.7	-7	40	-16
0.54	+1	6.1	-8	50	-17
0.75	0	7.7	-9	63	-18
1.0	-1	9.7	-10	80	-19
1.3	-2	12.0	-11	100	-29

have the 1/3 octave band TL data from which the STC values were derived, so it is possible to request the TL data when these types of partitions are being considered for isolation of mechanical equipment noise. The procedure for determining an STC rating is given in ASTM standard E 413.

e. TL of double walls. If mechanical equipment rooms are bordered by work spaces where a moderate amount of noise is acceptable (such as areas of categories 5 and 6 and possibly in some cases category 4 of table 2-2), the equipment noise usually can be adequately contained by a single wall. Double walls of masonry, or two separate drywall systems, can be used to achieve even greater values of TL. Various intentional and unintentional structural connections between double walls have highly varying effects on the TL of double walls. The improvement will be greatest at high frequency. The air space between the walls should be as large as possible to enhance the low-frequency improvement.

(1) *Influence of air space.* Figure 4-1 shows the influence of the air space in double wall construction, assuming no structural connections between the two walls. Actually even though there may exist no structural connection between the walls, the walls are coupled by the intervening air space at low frequencies. The air space in a double-wall cavity acts somewhat as a spring (air is an "elastic medium"), and the mass of the walls and the air in the cavity have natural frequencies, as seen in figure 4-2. The total effect of a double wall, then, is to gain the improvement of figure 4-1 but to lose some of that gain in the vicinity of the natural frequency determined in figure 4-2. It is suggested that a loss of 5 dB be assigned to the octave band containing the natural frequency and a loss of 2 dB be assigned to the octave band on each side of the band containing the natural frequency.

(2) *Flanking paths.* An obvious extension of the double wall concept is a wide corridor used to separate a noisy mechanical equipment room and a category 2-4 area (table 2-2). Although the airborne sound path through the double wall may appear to be under control, "flanking paths" may limit the actual achievable noise reduction into the quiet room. Figure 4-3 illustrates flanking paths. When a structure, such as a wall or floor slab, is set into vibration by airborne sound excitation, that vibration is transmitted throughout all nearby connecting structures with very little decay as a function of distance. In a very quiet room, that vibration can radiate as audible sound. For most single walls between noisy and quiet spaces (part A of figure 4-3), the sound levels in the quiet room are limited by the TL of the single wall (path 1), and the sound by the flanking path (path 2) is too low to be of concern. However, the higher TL of the double wall (part B of figure 4-3) reduces the airborne sound (path 1) so much that the

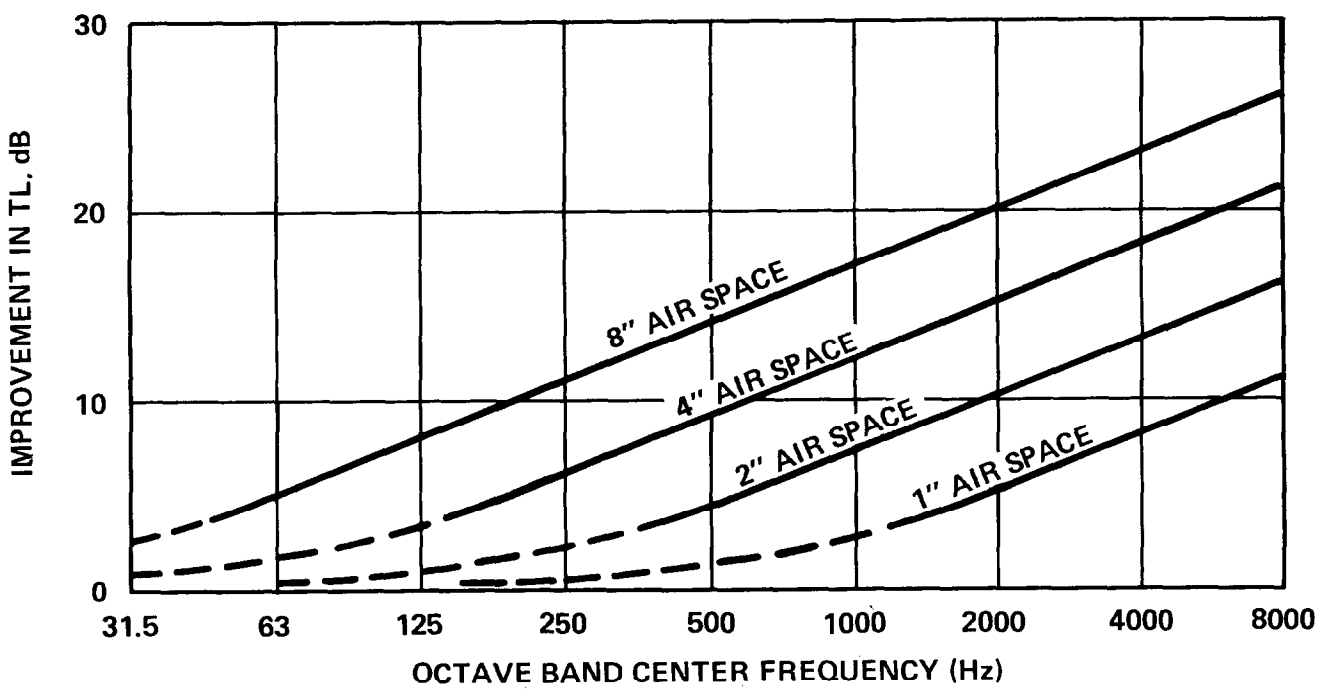

Figure 4-1. Improvement in Transmission Loss Caused by Air Space Between Double Walls Compared to Single Wall of Equal Total Weight, Assuming no Rigid Ties Between Walls.

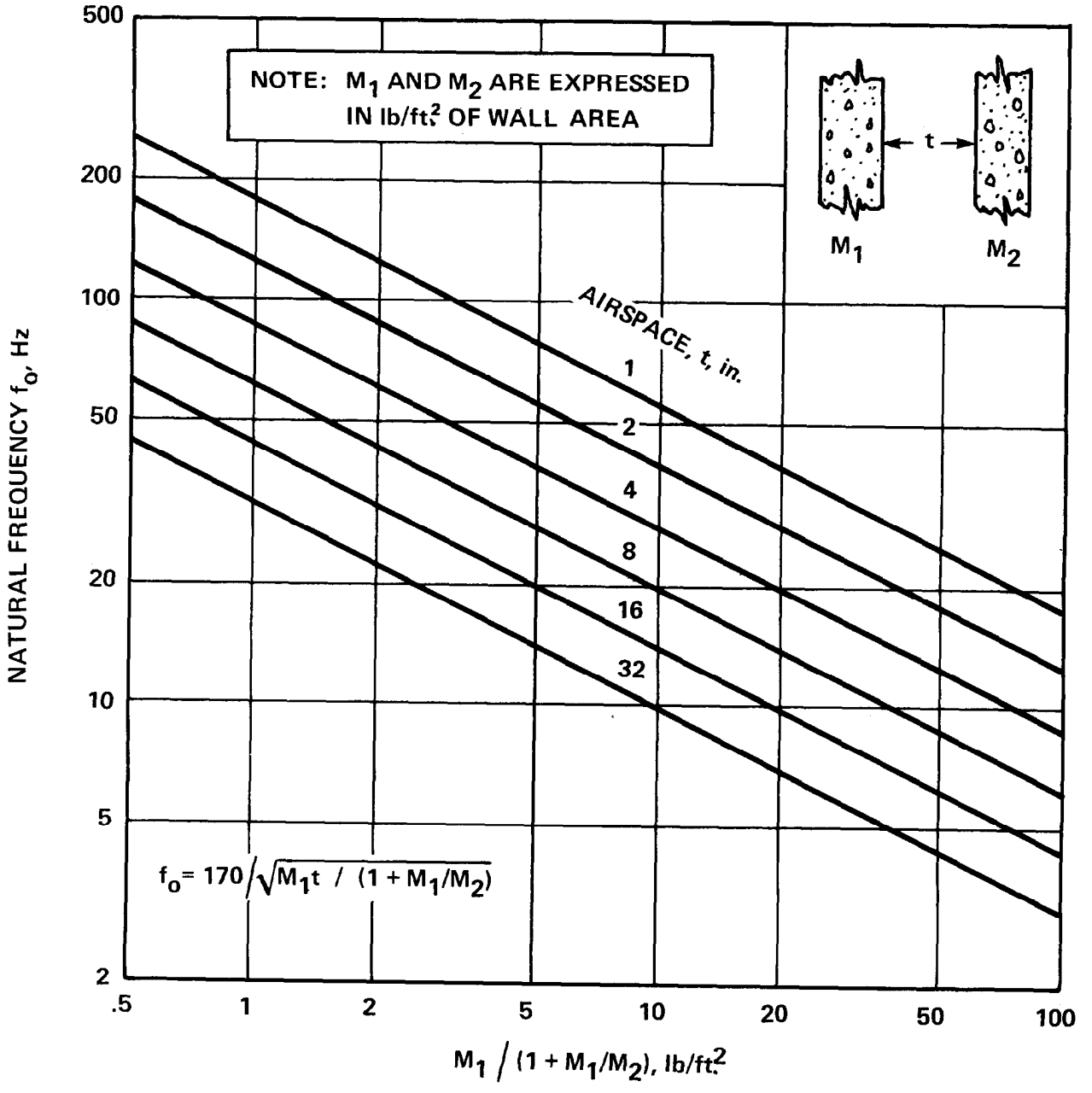

Figure 4-2. Natural Frequency of a Double Wall With an Air Space.

flanking path (path 2) becomes significant and limits the amount of noise reduction that can be achieved. Therefore, structural separation (part C of figure 4-3) is required in order to intercept the flanking path (path 2) and achieve the potential of the double wall.

(3) Resilient wall mountings. It is sometimes possible to enhance the TL of a simple concrete block wall or a study-type partition by resiliently attaching to that wall or partition additional layers of dry wall (gyp. bd.), possibly mounted on spring clips that are installed off 1 inch or 2 inch thick furring strips, with the resulting air space tilled with sound absorption material. These constructions can provide an improvement in TL of 5 to 10 dB in the middle frequency region and 10 to 15 dB in the high frequency region, when properly executed.

4-3. Transmission Loss-Walls, Doors, Windows.

Generally a partition will have better noise reduction with increasing frequency. It is therefore important to check the noise reduction at certain frequencies when dealing with low frequency, rumble type noise. Note that partitions can consist of a

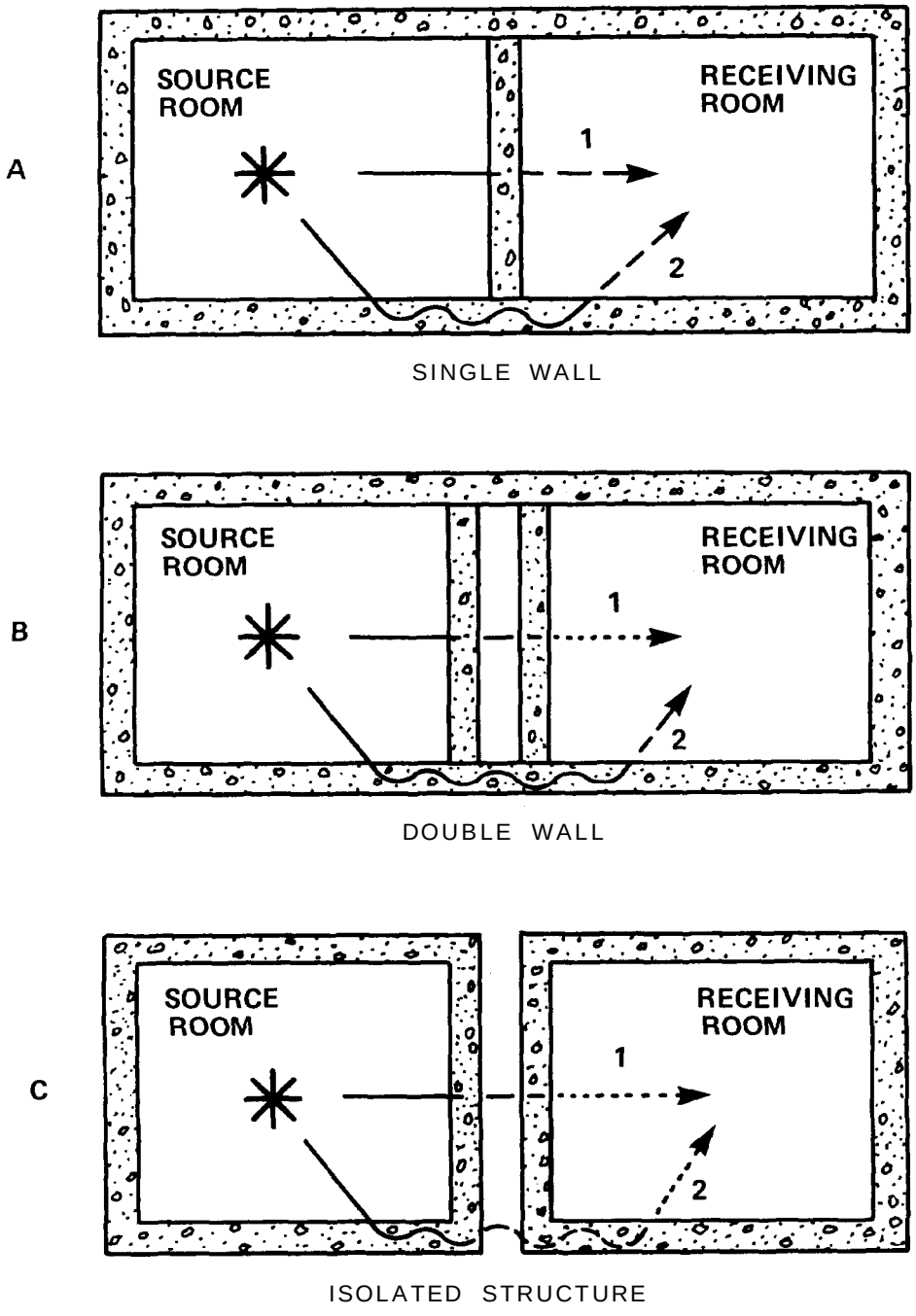

Figure 4-3. Schematic Illustration of Flanking Paths of Sound.

combination of walls, glass and doors. Walls can generally be classified as fixed walls of drywall or masonry, or as operable walls.

a. Drywall walls. These walls consist of drywall, studs and, sometimes, fibrous blankets within the stud cavity.

(1) *Drywall.* Drywall is a lightweight, low-cost material, and can provide a very high STC when used correctly. The use of Type X, or fire-rated drywall of the same nonrated drywall thickness, will have a negligible effect on acoustical ratings. Drywall is generally poor at low frequency noise reduction and is also very susceptible to poor installation. Drywall partitions must be thoroughly caulked with a nonhardening acoustical caulk at the edges. Tape and spackle is an acceptable seal at the ceiling and side walls. Electrical boxes, phone boxes, and other penetrations should not be back-to-back, but be staggered at least 2 feet, covered with a fibrous blanket, and caulked. Multiple layers of drywall should be staggered. Wood stud construction has poor noise reduction

characteristics because the wood stud conducts vibration from one side to the other. This can be easily remedied by using a metal resilient channel which is inserted between the wood stud and drywall on one side. Nonload-bearing metal studs are sufficiently resilient and do not improve with a resilient channel. Load-bearing metal studs are stiff and can be improved with resilient channels installed on one side.

(2) *Fibrous blankets.* Fibrous blankets in the stud cavity can substantially improve a wall's performance by as much as 10 dB in the mid and high frequency range where nonload-bearing metal studs, or studs with resilient channels, are used. A minimum 2 inch thick, 3/4 lb/ft3 fibrous blanket should be used. Blankets up to 6 inches thick provide a modest additional improvement.

(3) *Double or staggered stud walls.* When a high degree of noise reduction is needed, such as between a conference room and mechanical room, use double or staggered stud wall construction with two rows of metal or wood studs without bracing them together, two layers of drywall on both sides, and a 6 inch thick fibrous blanket.

b. Masonry walls. Masonry construction is heavy, durable, and can provide particularly good low frequency noise reduction. Concrete masonry units (CMU) made of shale or cinder have good noise reduction properties when they are approximately 50 percent hollow and not less than medium weight aggregate. Parging or furring with drywall on at least one side substantially improves the noise reduction at higher frequencies. The thicker the block, the better the noise reduction. An 8 inch thick, semi-hollow medium aggregate block wall with furring and drywall on one side is excellent around machine rooms, trash chutes, and elevator shafts.

c. Doors. The sound transmission loss of both hollow and solid core doors will substantially increase when properly gasketed. Regular thermal type tape-on gaskets may not seal well because of door warpage, and can also cause difficulty in closing the door. Tube type seals fitted into an aluminum extrusion can be installed on the door stop and fitted to the door shape. Screw type adjustable tube seals are available for critical installations. Sills with a half moon seal at the bottom of the door are recommended in place of drop seals, which generally do not seal well. Two gasketed doors with a vestibule are recommended for high noise isolation. Special acoustical doors with their own jambs and door seals are available when a vestibule is not practical or very high noise isolation is required.

d. Windows. Fixed windows will be close to their laboratory TL rating. Operable sash windows can be 10 dB less than the lab rating due to sound leaks at the window frame. Gaskets are necessary for a proper seal. Some window units will have unit TL ratings which would be a rating of both the gasketing and glass type. Double-glazed units are no better than single-glazed if the air space is 1/2 inch or thinner. A 2-inch airspace between glass panes will provide better noise reduction. Laminated glass has superior noise reduction capabilities. Installing glass in a neoprene "U" channel and installing sound absorbing material on the jamb between the panes will also improve noise reduction. Special acoustical window units are available for critical installations.

e. Transmission loss values for building partitions. Tables 4-2 through 4-11 provide octave band transmission losses for various constructions, comments or details on each structure are given in the footnotes of the tables. STC ratings are useful for cursory analysis when speech transmission is of concern. The octave band transmission losses should be used a more thorough analysis, particularly when the concern is for mechanical equipment.

Table No.	Construction Material
4-2	Dense poured concrete or solid-core concrete block or masonry.
4-3	Hollow-core dense concrete block.
4-4	"Cinder block" or other lightweight porous block with sealed skin.
4-5	Dense plaster.
4-6	Stud-type partitions.
4-7	Plywood, lumber, wood doors.
4-8	Glass walls or windows.
4-9	Double-glass windows.
4-10	Filled metal panel partition and acoustic doors.
4-11	Sheet aluminum, steel, lead, and lead-vinyl curtain.

4-4. Transmission Loss Of Floor-Ceiling Combinations.

Many mechanical equipment areas are located immediately above or below occupied floors of buildings. Airborne noise and structureborne vibration radiated as noise may intrude into these occupied floors if adequate controls are not included in the building design. The approximate octave band "TL" and "NR" are given here for five floor-ceiling combinations frequently used to control airborne machinery noise to spaces above and below the mechanical equipment room. To

Table 4-2. Transmission Loss (in dB) of Dense Poured Concrete or Solid-Core Concrete Block or Masonry.

Octave Frequency Band (Hz)	Suggested Design Values						"Ideal Values"		
	Thickness of Concrete or Masonry (in.)						Thickness (in.)		
	4	6	8	10	12	16	4	8	16
	Approximate Surface Weight (lb/ft.^{2})						Surface Wt. (lb/ft.^{2})		
	48	72	96	120	144	192	48	96	192
31	29	32	34	36	36	36	30	36	38
63	35	36	36	36	36	37	36	38	38
125	36	36	37	37	38	41	38	38	44
250	36	38	41	43	44	46	38	44	52
500	41	44	45	47	48	49	43	52	58
1000	45	48	49	50	51	53	51	58	64
2000	50	52	53	54	55	57	57	64	70
4000	54	56	57	58	59	61	63	70	76
8000	58	60	61	62	63	65	69	76	82
STC	45	48	49	51	52	53	49	55	62

Notes:

1. "Dense" concrete and masonry assumes 140-150 lb/ft.^{3} density.
2. For lower values of density, estimate the actual surface weight (in lb/ft.^{2} of wall area) and use the TL from the column in the table that is closest to that surface weight.
3. If desired, install hollow-core block and fill voids completely (a course at a time) with concrete or mortar of the required density.

Table 4-3. Transmission Loss (in dB) of Hollow-Core Dense Concrete Block or Masonry.

Octave Frequency Band (Hz)	Suggested Design Values						"Ideal Values"		
	Thickness of Concrete or Masonry (in.)						Thickness (in.)		
	4	6	8	10	12	16	4	8	16
	Approximate Surface Weight (lb/ft.^{2})						Surface Wt. (lb/ft.^{2})		
	28	36	44	52	60	76	28	44	76
31	26	28	29	31	32	33	26	30	34
63	31	33	35	36	36	36	32	36	38
125	35	36	36	36	36	36	37	38	38
250	36	36	36	37	37	38	38	38	39
500	37	38	41	42	43	44	38	42	48
1000	42	44	45	46	47	48	45	50	54
2000	46	48	49	50	51	52	53	56	60
4000	50	52	53	54	55	56	59	62	66
8000	54	56	57	58	59	60	65	68	72
STC	42	43	45	46	47	48	45	48	52

Notes:

1. "Dense" concrete and masonry assumes 140-150 lb/ft.^{3} density, if solid.
2. For lower density concrete, estimate the actual surface weight and use the TL for that value.

Table 4-4. Transmission Loss (in DB) of "Cinder Block" or Other Lightweight Porous Block Material with Impervious Skin on Both Sides to Seal Pores.

Octave Frequency Band (Hz)	Suggested Design Values				"Ideal Values"	
	Thickness of Cinder Block (in.)				Thickness (in.)	
	4	6	8	10	4	10
	Approximate Surface Weight (lb/ft.^{2})				Surface Wt. (lb/ft.^{2})	
	24	36	48	60	24	60
31	22	26	27	28	24	30
63	27	28	28	28	29	30
125	28	28	28	28	30	30
250	28	29	30	33	30	35
500	30	34	36	37	32	42
1000	36	38	40	41	41	48
2000	40	42	43	44	47	54
4000	43	45	46	47	53	60
8000	46	48	49	50	59	66
STC	36	38	39	41	39	46

Notes:

1. Lightweight block material assumes 65-75 lb/ft.^{3} density.

2. If hollow-core block or block of other density is used, select TL value for equivalent surface weight; interpolate or extrapolate if necessary.

3. Both sides of wall surfaces should be sealed with a plaster skim coat or two coats of heavy paint to achieve these values.

Table 4-5. Transmission Loss (in dB) of Dense Plaster.

Octave Frequency Band (Hz)	Suggested Design Values					"Ideal Values"	
	Thickness of Plaster (in.)					Thickness (in.)	
	1/2	3/4	1	1-1/2	2	1/2	2
	Approximate Surface Weight (lb/ft.^{2})					Surface Wt. (lb/ft.^{2})	
	4-1/2	7	9	13	18	4-1/2	18
31	8	12	14	17	20	10	22
63	14	18	20	24	26	16	28
125	20	24	26	27	28	22	30
250	26	28	28	28	28	28	30
500	28	28	28	28	29	30	30
1000	28	28	29	32	34	30	38
2000	29	32	34	36	38	30	44
4000	35	37	38	40	41	38	50
8000	38	41	42	43	44	44	56
STC	29	30	31	33	34	31	37

Notes :

1. "Dense" plaster assumes approximately 9 lb/ft^2 surface weight per 1 in. thickness.
2. If lightweight nonporous plaster is used, these TL values may be used for equivalent surface weight. These data must not be used for porous or "Acoustic plaster."
3. If plaster is to be used on typical stud wall construction, estimate the surface weight of the-plaster and use the TL values given here for that amount, but increase the TL values where appropriate so that they are not less than those given in Table 5-12 for the nearest applicable stud construction.

achieve high airborne sound isolation and provide a massive base for the equipment, one must specify heavy concrete floors. All floor slabs are assumed to be of dense concrete (140 to 150 lb/ft.3 density). For low density concrete, the thickness should be increased in order to have the equivalent surface weight for the desired TL. The weight of a housekeeping pad under the equipment should not be counted in the floor weight, although it does aid in the support of heavy equipment. The five suggested floor-ceiling combinations are based on flat concrete slab construction, but comments are given later on the use of other forms and shapes of concrete floors.

(1) *Type 1 floor-ceiling.* This is the simplest type and consists only of a flat concrete floor slab. The TL is given in table 4-12 for a number of thicknesses. Acoustic tiles or panels mounted directly to the underside of the slab add nothing to the TL, but they contribute to the Room Constant in the room in which they are located and therefore aid in reducing reverberant levels of noise. The TL table starts with a 4 inch thick slab, but this thickness is not recommended for large heavy rotary equipment at shaft speeds under about 1200 rpm or for any reciprocating equipment over about 25 hp. It is essential that there be no open holes through the floors to weaken the TL values.

(2) *Type 2 floor-ceiling.* This floor-ceiling combination consists of a concrete floor slab below which is suspended a typical low density acoustic tile ceiling in a mechanical support system. To qualify for the Type 2 combination, the acoustic tile should not be less than 3/4 in. thick, and it should have a noise reduction coefficient (NRC) of at least 0.65 when mounted. The air space between the suspended ceiling and the concrete slab above should be at least 12 inches, but the TL

Table 4-6. Transmission Loss (in dB) of Stud-Type Partitions.

Octave Frequency Band (Hz)	Type 1	Type 2	Type 3	Improvements A	Improvements B
31	4	9	6	2	2
63	10	16	12	2	2
125	17	24	20	3	2
250	26	34	30	3	3
500	34	42	39	4	4
1000	40	48	46	4	4
2000	46	46	52	3	5
4000	44	48	50	3	6
8000	48	52	54	3	5
STC	37	44	41	3	3

Notes :

Type 1 One layer 1/2=in. thick gypsum wallboard on each side of 2x4-in. wood studs on 16-in. centers. Fill and tape joints and edges; finish as desired. For equal width metal studs, add 2 dB in all bands and to STC.

Type 2 Two layers 5/8-h. thick gypsum wallboard on each side of 2x4-in. wood studs on 16-in. centers. Fill and tape Joints and edges; finish as desired. For equal width metal studs, add 3 dB in all bands and to STC.

Type 3 One layer 5/8-in. thick gypsum wallboard on outer edges of staggered studs, alternate studs supporting separate walls. 2x4 in. wood studs on 16-in. centers for each wall. Fill and tape joints and edges ; finish as desired. For equal width metal studs, add 1 dB in all bands and to STC.

(Notes continued next sheet)

improves if the space is larger than this. The estimate TL of a Type 2 floor-ceiling is given in table 4-13 for a few typical dimensions of concrete floor slab thickness and air space. Interpolate or extrapolate for dimensions not given in the table. Increased mass is most beneficial at low frequency and increased air space is helpful across all frequency bands.

(3) *Type 3 floor-ceiling.* This floor-ceiling combination is very similar to the Type 2 combination except that the acoustic tile material is of the "high TL" variety. This means that the material is of high density and usually has a foil backing to decrease the porosity of the back surface of the material. Most acoustical ceiling materials manufacturers produce "high TL" products within their lines. An alternate version of the Type 3 combination includes a suspended ceiling system of lightweight metal panel sandwich construction, consisting of a perforated panel on the lower surface and a solid panel on the upper surface, with acoustic absorption material between. The minimum NRC

Table 4-6. Transmission Loss (in dB) of Stud-Type Partitions. (Cont'd)

Improvement A.

1. These values may be added to TL of Type 1 or Type 3 partition if l/2-in. thick fibrous "sound-deadening board" is installed between studs and each layer of gypsum board.

2. These values may be added to TL of each type partition if resilient spring clips or resilient metal channels are used to support one layer of gypsum board on one side of the set of studs. (For Type 2, delete the second layer of gypsum board on this side; keep two layers on opposite side.) No significant additional benefit will result from combining resilient supports and sound-deadening board under the same layer of gypsum board.

Improvement B.

1. If full area 3-in. thick glass fiber or mineral wool is loosely supported inside the air cavity between walls, add these values to TL of Type 1 or Type 2 partition. Acoustic absorption material must not contact both interior surfaces of gypsum board (i.e., must not serve as partial "sound bridge" between walls).

2. If minimum l-l/2-in. thick glass fiber or mineral wool is loosely supported inside the air cavity, add these values to TL of Type 3 partition or add one half these values to TL of Type 1 or 2 partition. Follow precautions of Step B.l above.

Regarding both Improvements A and B.

The combined TL benefits of one type A improvement and one type B improvement can be applied to each of the partition types shown. More than two of these improvements to one partition will result in no significant additional TL benefit.

for the Type 3 acoustical material must be 0.65. The estimated TL of a Type 3 floor-ceiling is given in table 4-14 for a few typical dimensions of concrete floor slab thickness and air space.

(4) *Type 4 floor-ceiling.* This floor-ceiling combination consists of a concrete floor slab, an air space, and a resiliently supported plaster or gyp. bd. ceiling. This combination is for use in critical situations where a high TL is required. The ceiling should have a minimum 12 lb/ft.2 surface weight and the plemum space should be at least 18 inches high. The estimated TL of the Type 4 floor-ceiling combination is given in table 4-15 for a few typical dimensions of floor slab, air space, and ceiling thicknesses.

(a) Resiliently supported ceiling. The ceiling should be supported on resilient ceiling hangers that provide at least 1/10 inch static deflection under load. Neoprene-in-shear or compressed glass fiber hangers can be used, or steel springs can be used if they include a pad or disc of neoprene or glass fiber in the mount. A thick felt pad hanger arrangement can be used if it meets the static deflection requirement. The hanger system must *not* have metal-to-metal short-circuit paths around the isolation material of the hanger. Where the ceiling meets the vertical wall surface, the perimeter edge of the ceiling must not make rigid contact with the wall member. A 1/4-inch open joint should be provided at this edge, which is tilled with a nonhardening caulking or mastic or fibrous packing after the ceiling plaster is set.

(b) Critical locations. Critical locations require special care, Caution: This combination should be used only in critical situations, and special care must be exercised to achieve the desired TL values: full vague floor weight and thickness, no holes through the floor, and completely resiliently supported nonporous dense ceiling. If the plaster of gyp. bd. ceiling is not supported resiliently, the TL value will fall about midway between the Type 3 and Type 4 values for the corresponding dimensions and floor slab weights.

(5) *Type 5 floor-ceiling.* The “floating concrete floor”, as shown on figure 4-4, is a variation that

Table 4-7. Transmission Loss (in dB) of Plywood, Lumber, and Simple Wood Doors.

Octave Frequency Band (Hz)	Thickness of Plywood or Lumber (in.)				
	1/4	1/2	1	2	4
	Approximate Surface Weight (lb/ft.^{2})				
	1	2	4	8	16
31	0	2	7	12	17
63	2	7	12	17	18
125	7	12	17	18	19
250	12	17	18	19	22
500	17	18	19	22	30
1000	18	19	22	30	35
2000	19	22	30	35	39
4000	22	30	35	39	43
8000	30	35	39	43	47
STC	18	21	24	28	33

Notes:

1. Surface weight based on 48 lb/ft.^{3} density, or 4 lb/ft.^{2} per in. thickness.

2. Lumber construction requires tongue-and-groove Joints, overlapping joints, or sealing of joints against air leakage. For intermediate thicknesses, interpolate between thicknesses given in table.

3. For ungasketed hollow-core flush-mounted wood doors, use TL for l/h-in. thick plywood.

4. For solid-core wood doors or approximately 2-in. thickness, well gasketed all around, use TL for 2-in. thick plywood.

5. For small-area doors or boxes, framing around Cage of panel adds effective mass and stiffness and will probably give higher TL values than shown.

can be added to any one of the Type 1 through 4 combinations. This becomes necessary when all other floor systems clearly fail to meet the required TL values. The values given in table 4-16 are improvements in TL that can be added to the values of tables 4-12 through 4-15 if a well-designed and well-constructed floating floor is used. Where careful designs have included prevention of flanking paths of sound or vibration, the table 4-16 values have been achieved and even exceeded. However, if flanking paths are not prevented by intentional design considerations, only one-half of these improvements may be reached.

(a) Support of floating floor. The floating concrete floor should be supported off the structure floor at a height of at least 2 inches with properly spaced blocks of compressed glass fiber or multiple layers of ribbed or waffle-pattern neoprene pads or steel springs in series with two layers of ribbed or waffle-pattern neoprene pads. The density and loading of the compressed glass fiber or neoprene pads should follow the manufacturers' recommendations. If steel springs are used, their static deflection should not be less than 1/4 inch. In some systems the 2-inch space between the floating slab and the structure slab is partially filled with a 1-inch thickness of low-cost glass fiber or mineral

Table 4-8. Transmission LASS (in dB) of Glass Walls or Windows.

Octave Frequency Band (Hz)	Thickness of Glass (in.)			
	1/8	1/4	1/2	3/4
	Approximate Surface Weight (lb/ft^2)			
	1-1/2	3	6-1/2	10
31	2	7	13	17
63	8	14	19	22
125	13	20	24	26
250	19	25	27	28
500	23	27	29	29
1000	27	28	29	30
2000	27	28	31	32
4000	27	31	36	38
8000	31	34	40	43
STC	26	28	30	31

Notes :

1. Variations in surface area and edge-clamping conditions can alter the TL values considerably. There is not much consistency among published data.

2. TL tests usually are not carried out at 31-63 Hz; values given are estimates only.

3. In typical operable windows, poor seals can reduce these values.

4. Special laminated safety glass containing one or more viscoelastic layers sandwiched between glass panels will yield 5-10 dB higher values than given here for single thicknesses of glass; available in approximately 1/4- to 3/4-in. thicknesses.

wool blanket of 3- to 4-lb/cu feet density. Around all the perimeter edges of the floating floor (at the walls and around all concrete inertia bases within the floating floor area), there should be l-inch gaps that should later be packed with mastic or fibrous filling and then sealed with a waterproof nonhardening caulking or sealing material. A curb should be provided around the perimeter of the floated slab to prevent water leakage into the sealed perimeter joints, and several floor drains should be set in the structure slab under the floating slab to provide run-off of any water leakage into this cavity space.

(b) Area of floating slab. The floating slab should extend over the full area that needs the added protection between the noisy and the quiet spaces. The floating floor should not support any large, heavy operating equipment. Instead, such equipment should be based on extra-height housekeeping pads that protrude above the floating floor. The floating floor is beneficial, however, in reducing transmitted noise from lightweight equipment and pipe and duct supports. Figure 4-5 offers suggestions on applications and details of floating floors.

(c) Prevention of flanking paths. Figure 4-6 illustrates possible flanking paths (paths 2 and 3) of noise and vibration caused by airborne excitation of walls and columns in the mechanical equipment room. These paths make it impossible to achieve the low noise levels that the floating floor and resilient ceiling would permit (via path

Table 4-9. Transmission Loss (in dB) of Typical Double-Glass Windows, Using 1/4-in.-Thick Glass Panels With Different Air Space Widths.

Octave Frequency Band (Hz)	Width of Air Space (in.)		
	1/4	1-1/2	6
31	13	14	15
63	18	19	22
125	23	26	30
250	26	30	35
500	29	34	40
1000	34	38	43
2000	31	37	44
4000	34	41	50
8000	38	46	54
STC	31	37	43

Notes :

1. For maximum acoustic performance, each sheet of glass should be mounted in soft sealing gaskets to minimize rigid, structural connections between the sheets.

2. See notes under Table 5-14.

1). Airborne excitation of structural surfaces in the mechanical equipment room should be prevented by protecting all walls and columns with isolated second walls or encasements. As an alternative, the radiating walls and columns in the quiet receiving room can be covered with isolated second walls or encasements.

(6) *Nonflat floor slabs.* The above five types of floors are assumed to be of flat slab construction. Other popular forms are of a beam-slab type that provides stiffening beams combined with thin sections of concrete, such as prestressed cored slabs, T-shaped beams, and coffered pan construction (fig 4-7). Since the thin section usually accounts for about 60 to 80 percent of the total floor area, the TL is largely influenced by the thickness and area of the thinnest section. The thick web of the beam component gives mass and stiffness, and this should improve the low-frequency TL. There is no collection of measured data on these types of floors, so only a rough estimating procedure is suggested. First, it is necessary to estimate the surface weight (in lb/ft.2) of the thinnest section of concrete and also to estimate the average surface weight of the total floor. Second, the arithmetic average of these two surface weights is obtained, and this average is used to enter tables 4-12 through 4-15 for the TL of the equivalent weight of a flat concrete slab. If the resulting average corresponds to a surface weight of less than 6-inch-thick solid concrete, the floor is not recommended for the support of large mechanical equipment directly above category 1 through 3 spaces (table 2-2). All floor slab recommendations given in the manual area are based on acoustical considerations and should not be construed as referring to the structural adequacy of the slabs.

(7) *Noise reduction (NR) of floor-ceilings.* The procedure for determining the noise reduction of floor-ceiling construction is identical to that given in Section 4-2.b for walls. The area SW now becomes the floor area common to the source and receiving rooms, and the correction term C is now called the “floor correction term,” but it is still obtained from table 3-1.

Table 4-10. Transmission Loss (in dB) of a Filled Metal Panel Partition and Several Commercially Available Acoustic Doors.

Octave Frequency Band (Hz)	Filled Metal Panel Partition[a]	Acoustic Doors, Nominal Thicknesses				
		2-in. Thick[b]	4-in. Thick[C]	6-in. ThicK[d]	10-in. Thick[e]	Two Sets 4-in. Doors in Double Walls 32-in. Air Space[f]
31	19	--	27	34	--	42
63	22	--	29	37	--	48
125	26	31	34	41	47	54
250	31	34	36	47	53	60
500	36	37	40	52	61	67
1000	43	39	45	55	66	75
2000	48	43	49	59	65	84
4000	50	47	51	62	69	90
8000	52	--	--	60	--	95
STC	41	40	45	58	64	71

Notes:

[a]Constructed of two 18 ga. steel panels filled with 3 in. of 6-8 lb/ft.^{3} glass fiber or mineral wool; Joints and edges sealed airtight.

[b]Average of 4 doors, l-3/4- to 2-5/8-in. thick, gasketed.

[c]Average of 2 doors, all 4-in. thick, gasketed around all edges, range of weight 12-23 lb/ft.

[d]Average of 4 doors, 6- to 7-in. thick, gasketed, installed by manufacturer, range of weight 23-70 lb/ft.^{2}

[e]Average of 2 doors, each 10-in. thick, gasketed, installed by manufacturer, range of weight 35-38 lb/ft.^{2}

[f]Estimated performance, in isolated 12-in. thick concrete walls, no leakage, no flanking paths.

Table 4-11. Approximate Transmission Loss (in dB) of Aluminum, Steel and Lead.

Octave Frequency Band (Hz)	Aluminum			Steel				Lead			
	Thickness (in.)			Thickness (in.)				Thickness (in.)			Lead/Vinyl Curtain
	1/16	1/8	1/4	1/16	1/8	1/4	1/2	1/32	1/16	1/8	
	Surface Weight (lb/ft.^{2})			Surface Weight (lb/ft.^{2})				Surface Weight (lb/ft.^{2})			Surface Weight (lb/ft.^{2})
	1	2	3½	2½	5	10	20	2	4	7½	1
31	0	3	9	5	11	17	23	2	8	14	--
63	3	9	15	11	17	23	29	8	14	20	--
125	9	15	21	17	23	29	35	14	20	26	13
250	15	21	27	23	29	35	40	20	26	32	17
500	21	27	29	29	35	40	40	26	32	38	20
1000	27	29	29	35	40	40	40	32	38	44	28
2000	29	29	29	40	40	40	41	38	44	50	34
4000	29	29	30	40	40	41	48	44	50	56	38
8000	29	30	40	40	41	48	54	50	56	56	--
STC	25	28	29	33	38	40	41	30	36	42	26

Notes:

1. Surface weight of aluminum based on 170 lb/ft.^{3} density or 14 lb/ft.^{2} per in. thickness.
2. Surface weight of steel based on 480 lb/ft.^{3} density or 40 lb/ft.^{2} per in. thickness.
3. Surface weight of lead based on 700 lb/ft.^{3} density of 59 lb/ft.^{2} per in. thickness.
4. Variations in surface area and edge clamping conditions can alter the TL values of aluminum and steel. Lead assumed "limp." Application of vibration damping material to one surface of steel or aluminum will reduce resonances and help increase TL values in resonance regions.
5. TL tests usually are not conducted at 31-63 Hz; values given are estimates only.

Table 4-12. Transmission Loss (in dB) of Type 1 Floor-Ceiling Combinations.

Octave Frequency Band (Hz)	Thickness of Dense Concrete Slab (In.) 4	6	8	10	12
	Approximate Surface Weight (lb/ft.^{2}) 48	72	96	120	144
31	29	32	34	36	36
63	35	36	36	36	37
125	36	36	37	37	38
250	36	38	41	43	44
500	41	44	45	47	48
1000	45	48	49	50	51
2000	50	52	53	54	55
4000	54	56	57	58	59
8000	58	60	61	62	63
STC	45	48	49	51	52

Table 4-13. Transmission Loss (in dB) of Type 2 Floor-Ceiling Combinations.

Octave Frequency Band (Hz)	Thickness of Dense Concrete Slab (in.) 4	6	8	10	12
	Air Space Between Slab and Suspended Acoustic Ceiling (in.) 12	15	18	24	24
31	29	33	35	37	38
63	35	37	38	39	40
125	37	38	40	41	42
250	38	41	44	46	48
500	43	47	49	51	53
1000	48	53	54	56	57
2000	53	57	59	61	62
4000	57	61	63	64	65
8000	61	64	67	68	69
STC	48	51	52	55	57

Table 4-14. Transmission Loss (in dB) of Type 3 Floor-Ceiling Combinations.

Octave Frequency Band (Hz)	Thickness of Dense Concrete Slab (in.)				
	4	6	8	10	12
	Air Space Between Slab and Suspended "High TL" Acoustic Ceiling (in.)				
	12	15	18	24	24
31	31	35	38	40	42
63	37	39	41	42	44
125	39	41	43	44	46
250	41	44	48	50	52
500	46	50	53	55	58
1000	52	57	59	61	63
2000	57	62	64	66	68
4000	62	67	69	70	71
8000	66	71	74	75	76
STC	51	55	58	60	62

Table 4-15. Transmission Loss (in dB) of Type 4 Floor-Ceiling Combinations.

Octave Frequency Band (Hz)	Thickness of Dense Concrete Slab (in.)				
	4	6	8	10	12
	Air Space Between Slab and Resiliently Suspended Plaster Ceiling (in.)				
	15	18	24	30	30
	Thickness of Dense Plaster Ceiling (in.)				
	1	1	1	14	2
31	33	38	41	44	16
63	39	42	44	46	48
125	41	43	46	48	51
250	44	48	51	54	58
500	50	54	57	60	64
1000	56	61	64	66	69
2000	61	66	70	72	74
4000	67	72	75	76	77
8000	70	75	78	81	83
STC	55	59	61	64	68

Note :

1. If plaster ceiling is not resiliently suspended, use average of Tales 5-23 and 5-24 values.

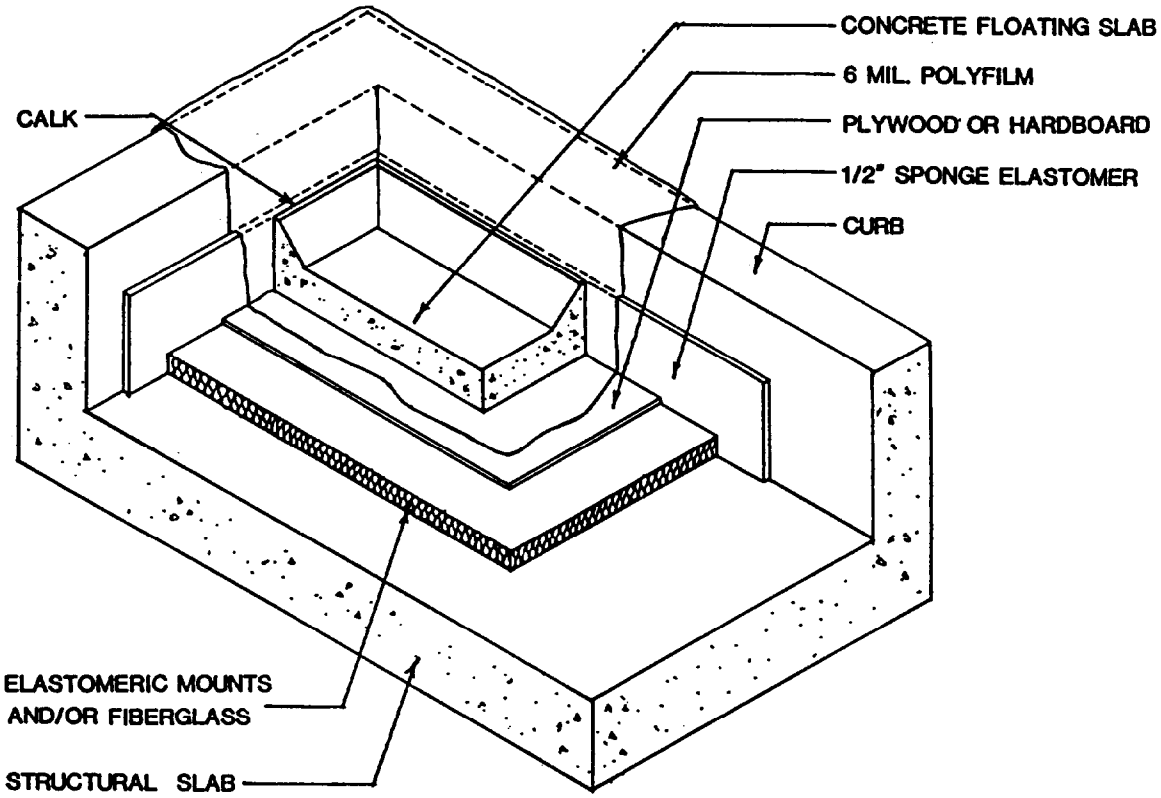

Figure 4-4. Typical Floating Floor Construction.

Table 4-16. Approximate Improvement in Transmission Loss (in dB) When Type 5 Floating Floor is Added to Types 1 through 4 Floor-Ceiling Combinations.

Octave Frequency Band (Hz)	Thickness of Floating Floor Slab (tn.) 3	4	5
	Air Space Between Structural Slab and Floating Slab (in.) 2	2	2
	Add Following Values (in dB) to Type 1-Type 4 TL Values		
31	5	7	9
63	7	9	11
125	8	10	12
250	9	11	13
500	10	12	14
1000	11	13	15
2000	12	14	16
4000	12	11	16
8000	12	14	16
STC	10	12	14

Note:

1. To achieve these values in practice, flanking paths of noise and vibration must be eliminated. Use only one half there values if flanking paths are not clearly reduced by intentional design measures.

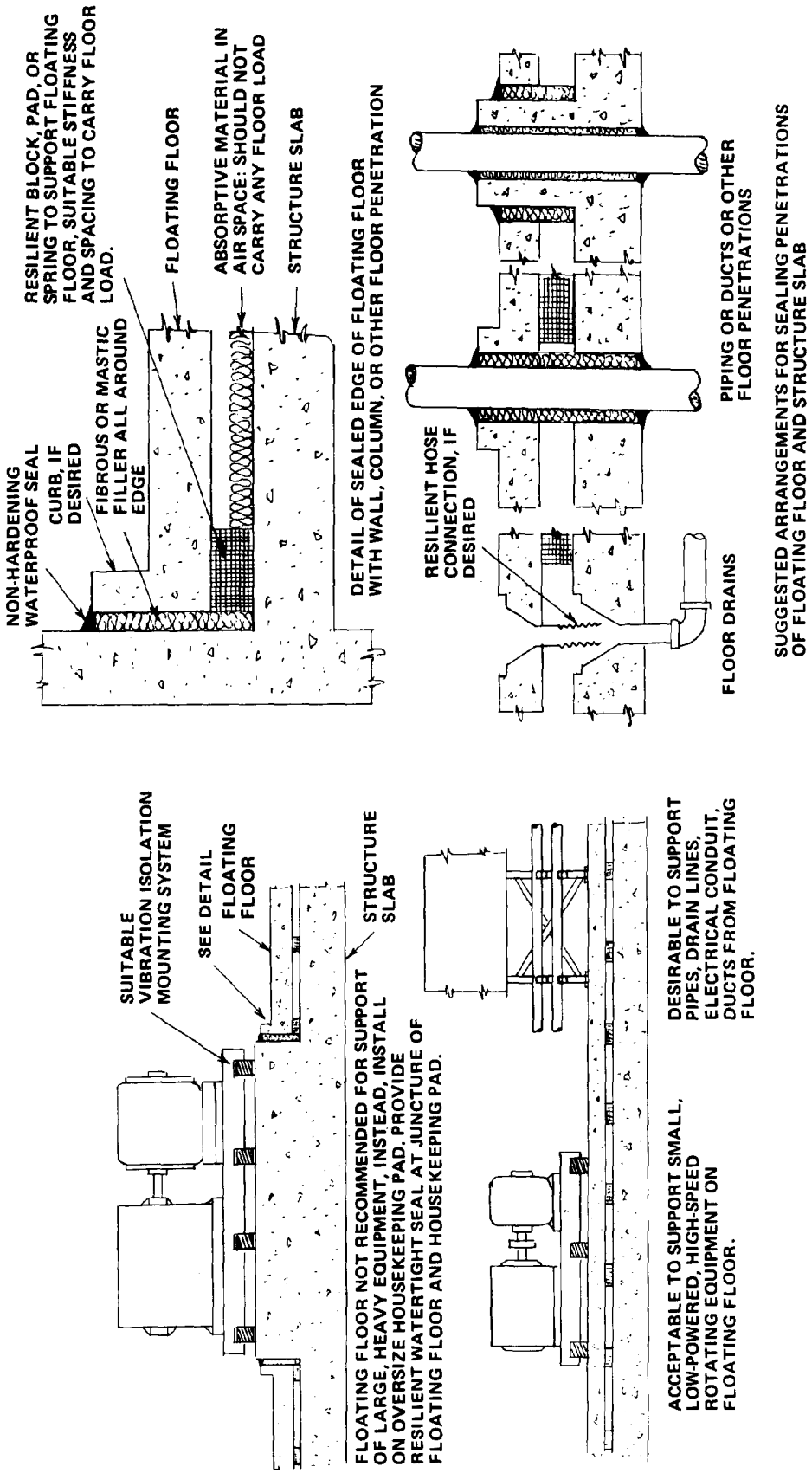

Figure 4-5. Suggested Applications and Details of Floating Floors for Improvement of Airborne Sound Transmission Loss.

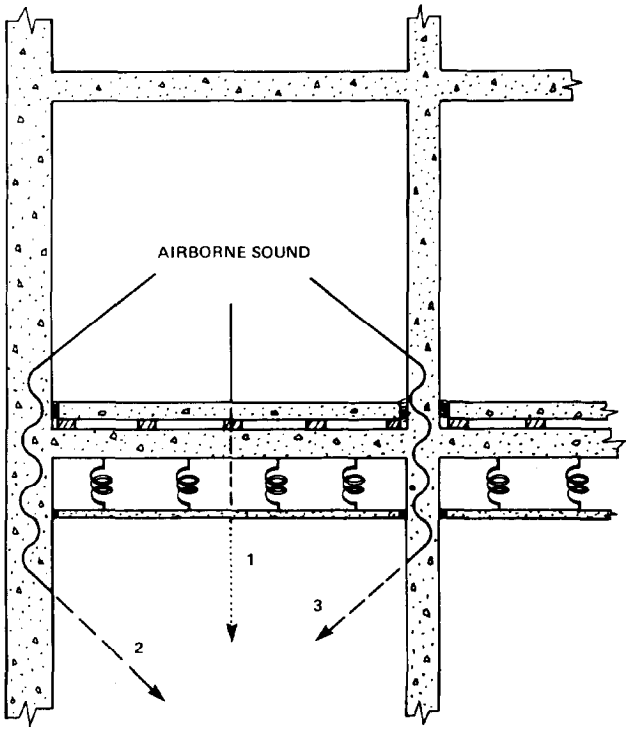

Figure 4-6. Structureborne Flanking Paths of Noise (Paths 2 and 3) Limit the Low Sound Levels Otherwise Achievable with High-TL Floating Floor Construction (Path 1).

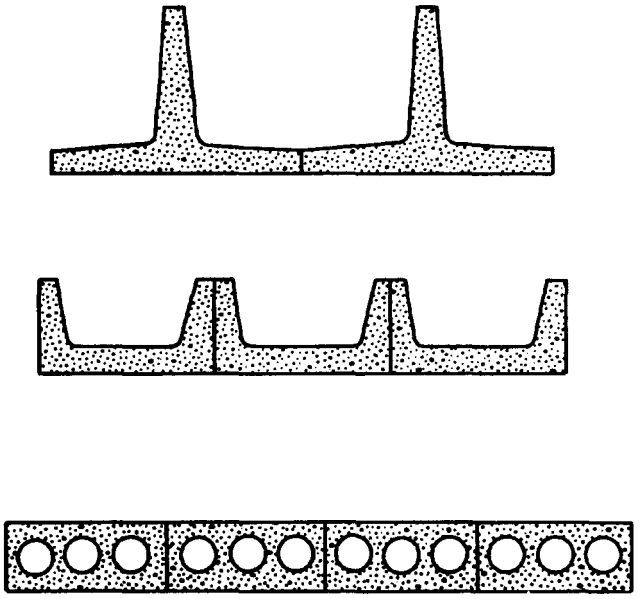

Figure 4-7. Nonflat Concrete Floors.

CHAPTER 5

SOUND PROPAGATION OUTDOORS

5-1. Introduction.

Mechanical equipment such as cooling towers, rooftop units and exhaust fans are commonly located outdoors. In addition there is an increasing trend to placing additional mechanical equipment outdoors. Unacceptable noise from electrical or mechanical equipment, whether located indoors or outdoors, may be strong enough to be transmitted to neighbor locations. The sound transmission paths are influenced by three broad types of natural effects: distance effects, atmospheric effects, and terrain and vegetation effects. In addition, structures such as barriers and buildings influence the transmission of sound to the neighbor positions. The quantitative values of these natural effects and structural interferences in outdoor sound propagation are given in this chapter.

5-2. Distance Effects.

Acoustical energy from a source spreads out as it travels away from the source, and the sound pressure level drops off with distance according to the "inverse square law." This effect is common to all types of energy propagation originating from an essentially point source and free of any special focusing. In addition, the air absorbs a certain amount of sound energy by "molecular absorption," and small amounts of ever-present air movement and inhomogeneities give rise to "anomalous excess attenuation." These three distance effects are summarized in the following paragraphs.

a. Effect of distance. Figure 5-1 illustrates the "inverse square law" for drop-off of SPL with distance. A point source of sound is shown at point "X", and the rays show the path of an element of sound energy traveling away from the source. At the distance "d" from the source, the sound energy is assumed uniformly spread over the small area "A" (which is the product of the two lengths "a" and "b"). At twice the distance, 2d, the lengths a and b are expanded to 2a and 2b, and the resulting area over which the sound is now spread has become 4A, 4 times the area back at distance d. Sound pressure level is related to the "energy per unit area" in the sound wave; so, in traveling twice the original distance from the source, the energy per unit area has decreased by a factor of 4 which corresponds to a reduction of 6 dB in the sound pressure level. Simply illustrated, this is the "inverse square law"; that is, the SPL decreases at the rate of 6 dB for each doubling of distance from the source. An equation and a table incorporating this effect are given in paragraph 5-2d.

b. Molecular absorption. In addition to the reduction due to the inverse square law, air absorbs sound energy, and that the amount of absorption is dependent on the temperature and humidity of the air and the frequency of the sound. Table 5-1 gives the molecular absorption coefficients in dB per 1000-foot distance of sound travel for a useful range of temperature and relative humidity of the octave frequency bands. A "standard day" is frequently defined as having a temperature of 59 deg. F and a relative humidity of 70 percent. For long-time average sound propagation conditions, the molecular absorption coefficients for standard day conditions should be used. For any specific application of measured or estimated SPL for known temperature and humidity conditions, the table 5-1 values should be taken into account.

c. Anomalous excess attenuation. Large-scale effects of wind speed, wind direction, and thermal gradients in the air can cause large differences in sound transmission over large distances. These are discussed briefly under "atmospheric effects" in section 5-3. Almost all the time, however, there are small-scale influences of these atmospheric factors. Even under fairly stable conditions for sound propagation through the air, small amounts of diffraction, refraction (bending), and sound interference occur over large distances as a result of small wind, temperature, and humidity differences in the air. These are combined into "anomalous excess attenuation" which is applied to long-term sound level estimates for average-to-good sound propagation conditions. Table 5-2 gives the values of anomalous excess attenuation, in dB per 1000-foot distance. These are conservative average values; higher values than these have been measured in long-time studies of sound travel over a variety of field conditions. Anomalous excess attenuation helps explain the fact that measure SPLs at large distances are frequently lower than estimated SPLs even when sound propagation conditions seem quite good.

d. Estimating outdoor sound levels. The sound level, at a distance, can most readily be calculated if the sound power level (Lw) is known. In some cases the sound power is not known, however the sound pressure level (Lp) at a given distance is known. In this case the sound pressure level at different distance can be derived from the known

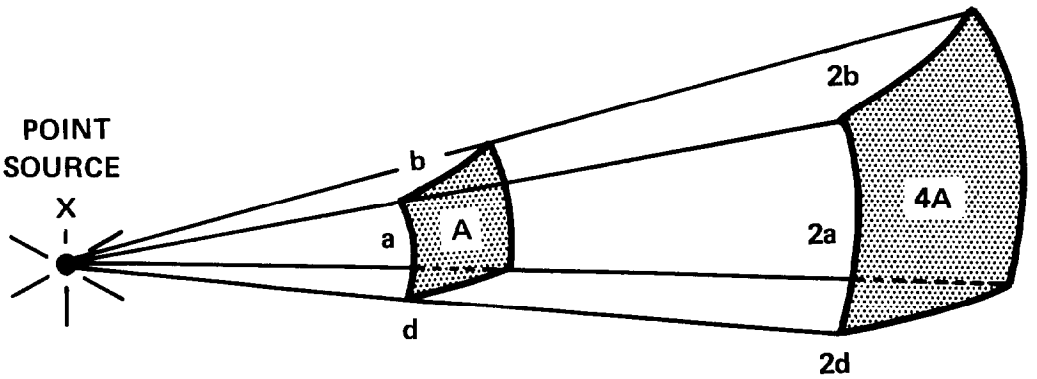

Figure 5-1. Inverse Square Law of Sound Propagation.

sound pressure level. Consideration for each of these cases is given below.

(1) *SPL from known Lw.* Equation 5-1 combines the effects of distance, atmospheric attenuation and anomalous attenuation for the calculation of sound pressure level when the sound power level of the source is known.

$$Lp = Lw - 10 \log \{2\pi d^2\} + d(\alpha_m + \alpha_a)/1000 - 10 \qquad \text{(eq 5-1)}$$

Where Lp is the SPL at distance d (in ft.) from a sound source whose PWL is Lw, α_m is the molecular absorption coefficient (in dB/1000 ft.) from table 5-1, and α_a is the anomalous excess attenuation (in dB/1000 ft.) from table 5-2. Equation 5-1 is simplified to equation 5-2:

$$Lp + Lw - DT, \qquad \text{(eq 5-2)}$$

where DT, in decibels, is called the "distance term" and is defined by equation 5-3:

$$DT + 10 \log (2\pi d^2) + d(\alpha_m + \alpha_a)/1000 - 10 \qquad \text{(eq 5-3)}$$

Table 5-3 gives tabulated data for the distance term out to a distance of 80 feet. For such short distances, the molecular absorption and anomalous excess attenuation are usually negligible and are ignored in this simplifying table. The table 5-3 values can be applied to all octave bands for most close-in situations. However, at larger distances the absorption and attenuation effects become significant, and table 5-4 gives the distance terms as a function of the octave bands for distances from 80 feet out to 8000 feet.

(2) *SPL at another distance from known SPL.* Equation 5.4 can be used to calculate the sound pressure level at any distance if the sound pressure level at one distance is given.

$$L_{p2} = L_{p1} - DT_2 + DT_1, \qquad \text{(eq 5-4)}$$

where L_{p1} is the known SPL at distance d,, and L_{p2} is the wanted SPL distance d_2. The distance terms DT_1 and DT_2 are evaluated in equation 5-3 or obtained from tables 5-3 and 5-4. This equation applies when d_1 is greater than the physical dimension of the sound source.

5-3. Atmospheric Effects.

Wind and temperature variations can cause bending of sound waves and can influence changes in sound levels at large distances. These are normally short-term effects and do not provide reliable noise control. However, they help explain the variations that occur in outdoor sound propagation and measurements.

a. Wind effects. A steady, smooth flow of wind, equal at all altitudes, would have no noticeable effect on sound transmission. In practice, however, wind speeds are slightly higher above the ground than at the ground, and the resulting wind speed gradients tend to "bend" sound waves over large distances. Sound traveling with the wind is bent down to earth, while sound traveling against the wind is bent upwards above the ground. The downwind and upwind effects are summarized in the next two paragraphs. Irregular, turbulent, or gusty wind provides fluctuations in sound transmission over large distances (possibly because of partial wavelength interference of various paths taken by various sound rays of the total beam). The net effect of these fluctuations may be an average reduction of a few decibels per 100 yards for gusty wind with speeds of 15 to 30 mph. However, gusty wind or wind direction cannot be counted on for noise control over the lifetime of an installation.

b. Downwind effect. Figure 5-2 illustrates the principal influence of downwind on sound propagation. When there is no wind, the principal sound arrives at the receiver by path 1. Along this path, the ground, vegetation, and trees can absorb some of the sound. During downwind conditions, however, the path 2 sound (that normally travels

Table 5-1. Molecular Absorption Coefficients, dB per 1000 ft., as a Function of Temperature and Relative Humidity.

Temperature °F	Temperature °C	Relative Humidity $	Octave Band Center Frequency, Hz[b] 63	125	250	500	1000	2000	4000	8000
14	-10	10	0.3	0.5	0.6	0.9	1.2	1.8	2.8	4.0
		50	0.1	0.2	0.6	1.6	4.4	8.6	13.9	17.0
		90	0.1	0.1	0.3	0.9	2.6	7.2	18.3	26.6
32	0	10	0.2	0.6	1.3	2.4	3.5	4.8	6.9	8.9
		50	0.1	0.1	0.3	0.9	2.6	7.5	20.3	32.9
		90	0.1	0.1	0.3	0.6	1.4	4.1	12.1	21.9
50	10	10	0.1	0.3	1.0	2.7	6.5	11.9	17.5	21.1
		50	0.1	0.2	0.3	0.7	1.6	4.4	13.3	24.0
		90	0.1	0.2	0.3	0.7	1.3	2.8	7.3	13.3
59	15	10	0.1	0.3	0.8	2.3	6.1	14.4	25.9	32.6
		30	0.1	0.2	0.4	0.8	2.0	6.1	17.7	31.6
		50	0.1	0.2	0.4	0.7	1.5	3.6	10.5	19.3
› (“Std Day")		70	0.1	0.2	0.4	0.7	1.5	3.0	7.6	13.7
		90	0.1	0.2	0.4	0.7	1.5	3.0	6.6	11.2
68	20	10	0.1	0.2	0.6	1.8	5.3	14.2	31.9	44.9
		30	0.1	0.2	0.4	0.8	1.8	4.8	14.4	26.2
		50	0.1	0.2	0.4	0.8	1.6	3.4	8.6	15.6
		70	0.1	0.2	0.4	0.8	1.6	3.3	7.1	11.9
		90	0.1	0.2	0.4	0.8	1.6	3.3	7.0	10.8
77	25	10	0.1	0.2	0.5	1.5	4.4	12.4	33.5	52.6
		30	0.1	0.2	0.4	0.9	1.8	4.1	11.6	21.7
		50	0.1	0.2	0.4	0.9	1.8	3.6	8.0	13.4
		70	0.1	0.2	0.4	0.9	1.8	3.6	7.6	11.7
		90	0.1	0.2	0.4	0.9	1.8	3.6	7.6	11.7
86	30	10	0.1	0.2	0.5	1.2	3.6	10.4	29.3	50.7
		50	0.1	0.2	0.5	1.0	2.0	4.0	8.3	12.9
		90	0.1	0.2	0.5	1.0	2.0	4.0	8.3	12.8
100	38	10	0.1	0.3	0.6	1.1	2.7	7.7	23.0	41.3
		50	0.1	0.3	0.6	1.1	2.3	4.6	9.6	14.6
		90	0.1	0.3	0.6	1.1	2.3	4.6	9.6	14.6

Taken from "Standard Values of Atmospheric Absorption as a function of Temperature and Humidity," SAE ARP 866A, 15 March 1975, Society of Automotive Engineers, Inc., 400 Commonwealth Drive, Warrendale, Penn. 15096.

[b] Use 0 dB/1000 ft. for 31 Hz octave band.

Used with permission from Society of Automotive Engineers, Inc.

upward into the sky and does not return to earth) is bent down and returns to the earth, sometimes passing above the attenuating ground surfaces and the vegetation, thus yielding higher sound levels to the receiver. This can occur only for relatively large distances between source and receiver (say, 1000 feet or more). In summary, downwind can reduce or eliminate some of the attenuating effects of terrain and vegetation or of solid barriers that otherwise intercept sound paths.

c. Upwind effect. A strong persistent upwind condition can cast a shadow zone, as shown sche-

Table 5-2. Values of Anomalous Excess Attenuation per 1000 ft.

Frequency Band, HZ	Anomalous Excess Attenuation, dB/1000 ft.
31	0.3
63	0.4
125	0.6
250	0.8
500	1.1
1000	1.5
2000	2.2
4000	3.0
8000	4.0

matically in figure 5-3. When wind speed profiles are known, the distance to the shadow zone can be estimated, but this is an impractical field evaluation. It is sufficient to realize that the shadow zone can account for up to about 25-dB sound level reduction and that this can occur at distances greater than about 1000 feet for wind speeds above about 10 to 15 mph.

d. Temperature effect. Constant temperature with altitude produces no effect on sound transmission, but temperature gradients can produce bending in much the same way as wind gradients do. Air temperature above the ground is normally cooler than at the ground, and the denser air above tends to bend sound waves upward, as in part A of figure 5-4. With "temperature inversions," the warm air above the surface bends the sound waves down to earth. These effects are negligible at short distances but they may amount to several dB at very large distances (say, over a half mile). Again, little or no increase is caused by thermal gradients (compared to homogeneous air), but there may be a decrease in sound levels.

e. Precipitation. Rain, mist, fog, hail, sleet, and snow are the various forms of precipitation to consider. These have not been studied extensively in their natural state, so there are no representative values of excess attenuation to be assigned to them. Rain, hail, and sleet may change the background noise levels, and a thick blanket of snow provides an absorbent ground cover for sound traveling near the ground. Precipitation or a blan-

Table 5-3. Distance Term (DT), in dB, to a Distance of 80 ft.

Distance D ft.	Distance Term, DT dB	Distance ft.	Distance Term, DT dB
1.3	0	18	23
1.8	3	20	24
2.5	6	22.5	25
3.2	8	25	26
4	10	28	27
5	12	31.5	28
6.3	14	35.5	29
8	16	40	30
9	17	45	31
10	18	50	32
11	19	56	33
12.5	20	63	34
14	21	71	35
16	22	80	36

Table 5-4. Distance Term (DT), in dB, at Distances of 80 ft. to 8000 ft.

Distance D ft.	Octave Band Center Frequency. HZ Distance Term (DT). d8								
	31	63	125	250	500	1000	2000	4000	8000
80	36	36	36	36	36	36	36	37	37
89	37	37	37	37	37	37	37	38	39
100	38	38	38	38	38	38	39	39	40
112	39	39	39	39	39	39	40	40	41
125	40	40	40	40	40	40	41	41	42
140	41	41	41	41	41	41	42	42	43
160	42	42	42	42	42	42	43	44	45
180	43	43	43	43	43	44	44	45	46
200	44	44	44	44	44	45	45	46	48
225	45	45	45	45	45	46	46	47	49
250	46	46	46	46	46	47	47	49	50
280	47	47	47	47	48	48	48	50	52
315	48	48	48	48	49	49	50	51	54
355	49	49	49	49	50	50	51	53	55
400	50	50	50	50	51	51	52	54	57
450	51	51	51	52	52	52	53	56	59
500	52	52	52	53	53	53	55	57	61
560	53	53	53	54	54	55	56	59	63
630	54	54	55	55	55	56	57	61	65
710	55	55	56	56	56	57	59	63	68
800	56	56	57	57	57	58	60	64	70
890	57	57	58	58	59	60	62	66	73
1000	58	58	59	59	60	61	63	69	76
1200	60	60	61	61	62	63	66	72	81
1400	61	62	62	63	64	65	68	76	86
1600	62	63	63	64	65	67	70	79	90
1800	64	64	64	65	66	69	73	82	95
2000	65	65	66	66	68	70	74	85	99
2250	66	66	67	68	69	72	77	89	105
2500	67	67	68	69	71	74	79	93	110
2800	68	68	69	70	72	75	82	97	117
3150	69	70	71	72	74	77	84	101	124
3500	70	71	72	73	75	79	87	106	131
4000	71	72	73	75	77	82	91	112	141
4500	72	73	75	76	79	85	94	119	151
5000	73	75	76	78	81	87	98	125	161
5500	74	76	77	79	83	89	101	131	170
6000	75	77	79	81	84	92	105	137	180
6500	76	77	79	82	86	94	108	143	189
7000	77	78	81	83	88	96	111	149	199
7500	78	79	82	85	89	98	115	155	208
8000	76	80	82	86	90	100	118	161	218

ket of snow are intermittent, temporary, and of relatively short total duration, and they should not be counted on for steady-state sound control, even though they offer noticeable attenuation.

5-4. Terrain and vegetation.

Sound transmission near the earth's surface involves essentially three components of sound paths, shown schematically by figure 5-5. The ground-reflected sound (path 2) may arrive at the receiver either in phase or out of phase with the direct sound (path 1) and can either increase or decrease the received sound level. The ground surface may be hard or soft (reflective or absorbent), and this also affects the phase and magnitude of the reflected path. Paths 1 and 2 usually determine the sound levels at the receiver, but a solid barrier or dense woods can practically eliminate these paths. In such situations, path 3 may become significant. Path 3 is made up of relatively low-level sound that is refracted (bent) or scattered back to earth by numerous small patches of inhomogeneous air of varying temperature, speed, direction, density, etc. Field studies show that when paths 1 and 2 are virtually eliminated, there remain sound levels that are about 20 to 25 dB below the path 1 and 2 sound levels. These are the sound levels arriving by way of the numerous paths that together make up path 3, as visualized in figure 5-5.

Attenuation of woods and vegetation. Table 5-5 presents the approximate insertion loss of a 100-foot-deep growth of medium-dense woods made up

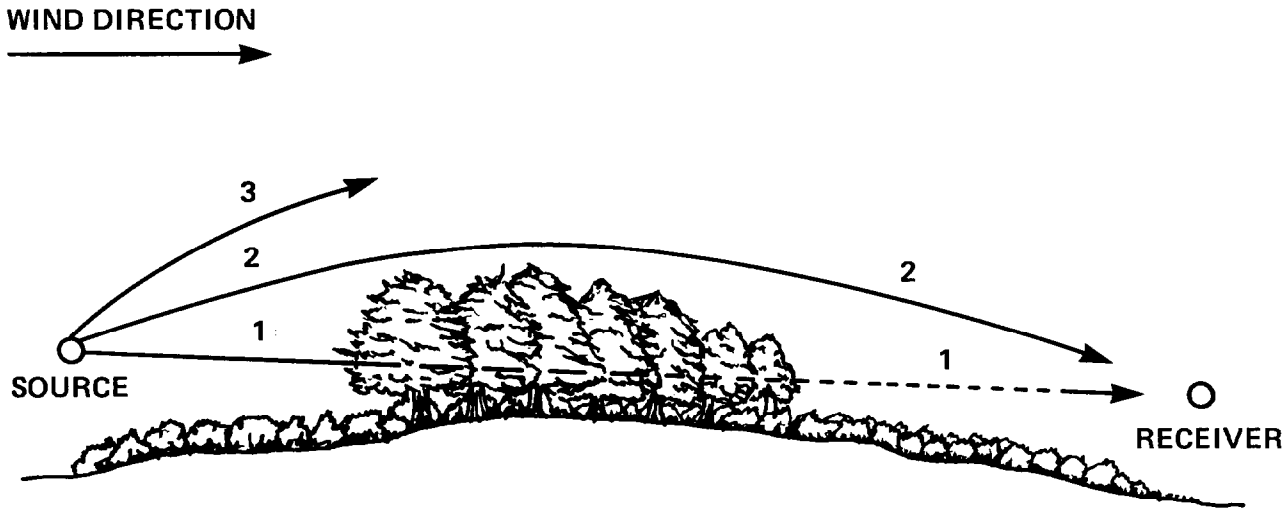

Figure 5-2. Downwind Sound Diffraction.

of a mixture of deciduous and coniferous trees having a height in the range of 20 to 40 feet. For this density, the visibility penetration is about 70 to 100 feet.

5-5. Barriers.

A barrier is a solid structure that intercepts the direct sound path from a source to a receiver. It provides a reduction in sound pressure level within its "shadow zone." A wall, a building, a large mound of earth, an earth berm, a hill, or some other form of solid structure can serve as a barrier. The approximate insertion loss of an outdoor barrier can be estimated.

a. Barrier parameters. Figure 5-6 illustrates the geometrical aspects of an outdoor barrier where no extraneous surfaces reflect sound into the protected area. The insertion loss provided by the barrier to the receiver position is a function of the path length difference between the actual path traveled and the line-of-sight direct path. Large values of barrier height "h" above the line-of-sight path produce large values of the diffraction angle and large values of path length difference, which in turn provide strong shadow zones and large values of insertion loss. In figure 5-6, the direct line-of-sight path length is S+R, and the actual distance traveled is $(\sqrt{\{S^2 + h^2\}} + \sqrt{\{R^2 + h^2\}})$. Then the path length difference is given in equation 5-5.

$$\delta = \sqrt{\{S^2 + h^2\}} - S) + (\sqrt{\{R^2 + h^2\}} - R)] \qquad \text{(eq 5-5)}$$

b. Insertion loss values. Table 5-6 gives the insertion loss of an outdoor barrier wall as a function of the path length difference and the octave band frequency. The following restrictions apply.

(1) *Other reflecting surfaces.* There should be no other surfaces that can reflect sound around the ends or over the top of the barrier into the protected region (the shadow zone). Figure 5-7 shows examples of reflecting surfaces that can reduce the effectiveness of a barrier wall. These situations should be avoided.

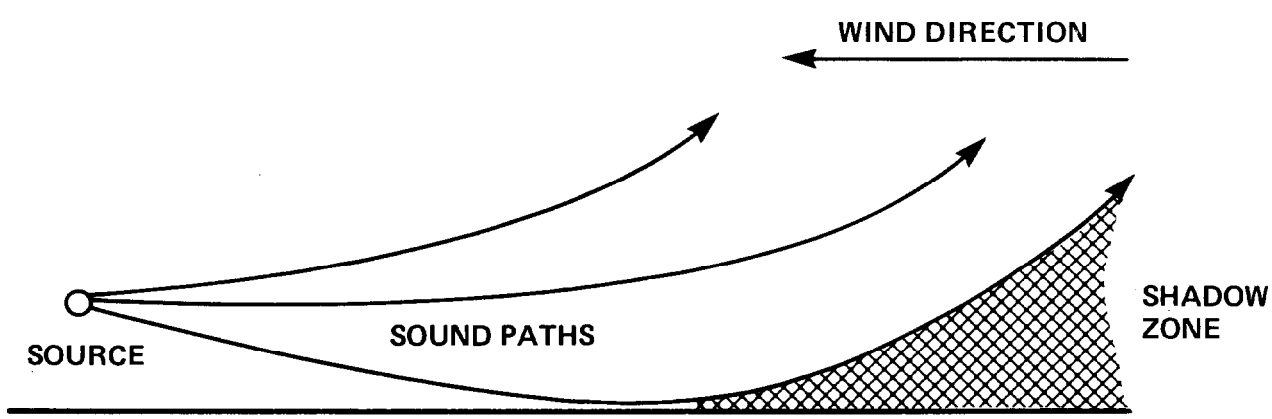

Figure 5-3. Upwind Sound Diffraction.

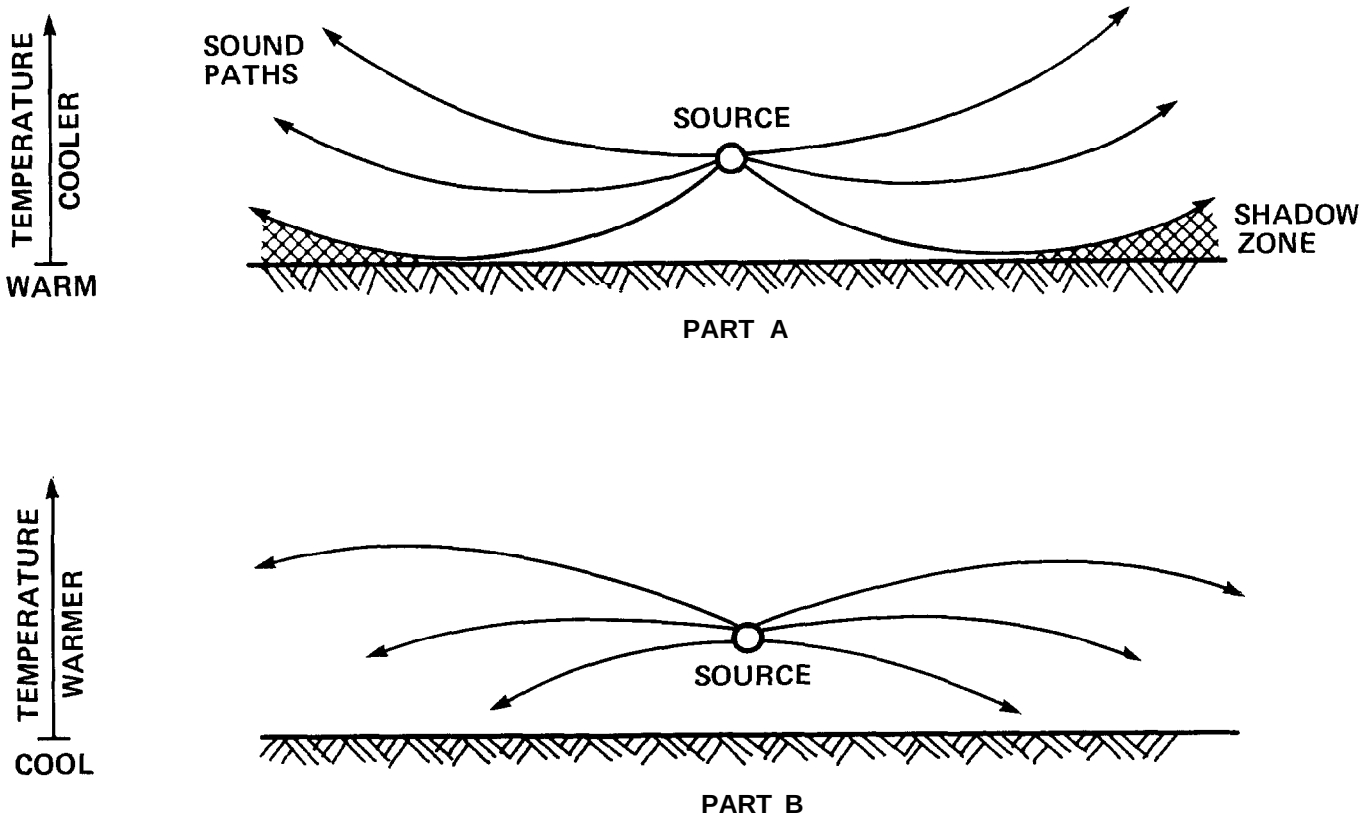

Figure 5-4. Effects of Temperature Gradients on Sound Propagation.

(2) *TL of barrier.* The barrier wall or structure must be solid (no penetrating holes) and must be constructed of a material having sound transmission loss (TL) that is at least 10 dB greater than the calculated insertion loss of the barrier in all octave bands.

(3) *Width of barrier.* Each end of the barrier should extend horizontally beyond the line of sight from the outer edge of the source to the outer edge of the receiver building by a distance that is at least 3 times the value of h used in the calculation.

(4) *Large distances.* For large distances, sound scattered and bent over the barrier (the path 3 concept in figure 5-5) reduces its effectiveness. It is suggested that the calculated insertion loss be reduced by about 10 percent for each 1000-foot distance between source and receiver.

(5) *Atmospheric effects.* For wind speeds above about 10 to 15 mph along the direction of the sound path from source to receiver and for distances over about 1000 feet between source and receiver, the wind bends the sound waves down over the top of the barrier. Under these conditions, the barrier will appear to be very ineffective.

(6) *Terrain-vegetation effects.* When both a barrier and the terrain-vegetation effects of Section 5-4 occur simultaneously, only the larger values of attenuation calculated for these two effects should be used. The sum of both effects should not be used.

(7) *Another building us a barrier.* If the barrier is another building, there should be no large openings entirely through the building that would destroy its effectiveness as a barrier. A few small

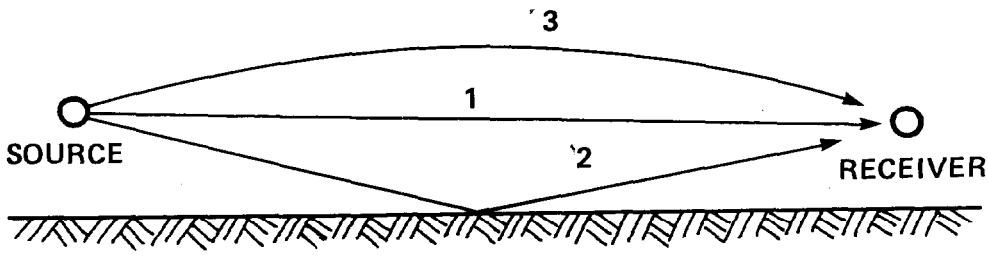

Figure 5-5. Outdoor Sound Propagation Near the Ground.

Table 5-5. Insertion Loss for Sound Transmission Through a Growth of Medium-Dense Woods.

Octave Frequency Band, HZ	Insertion Loss, dB per 100 ft. of Woods
31	0
63	1/2
125	1
250	1 1/2
500	2
1000	3
2000	4
4000	4 1/2
8000	5

open windows in the near and far walls would probably be acceptable, provided the interior rooms are large. The building may qualify as a compound barrier.

(8) *Caution.* A large flat reflecting surface, such as the barrier wall, may reflect more sound in the opposite direction than there would have been with no wall at all present. If there is no special focusing effect, the wall may produce at most only about 2 or 3 dB higher levels in the direction of the reflected sound.

c. Unusual barrier geometries. Figure 5-8 illustrates three common situations that do not fall into the simple geometry of figure 5-6. The procedure suggested here is to estimate the path length difference and use table 5-6 to obtain the insertion loss, even though this simplified approach has not been proven in field or model studies.

(1) *In-wall sound source.* In part A of figure 5-8, the source could be a wall-mounted exhaust fan, an inlet to a ventilating fan, or a louvered opening permitting air into (and noise out of) a mechanical equipment room. The conventional source distance S is zero and the slant distance becomes h. Thus, the total path length difference is $(h + \sqrt{\{R^2 + h^2\}} - R)$.

(2) *Compound barrier.* In part B of figure 5-10, the path length difference is calculated from three triangles, as follows:

$$\delta = [(\sqrt{\{S^2 + h^2\}} - S) + (\sqrt{\{R_1{}^2 + h_1{}^2\}} - R_1) + (\sqrt{\{R_2{}^2 + h_2{}^2\}} - R_2)]$$

Part C of figure 5-9 is another form of compound barrier and also requires the three-triangle calculation.

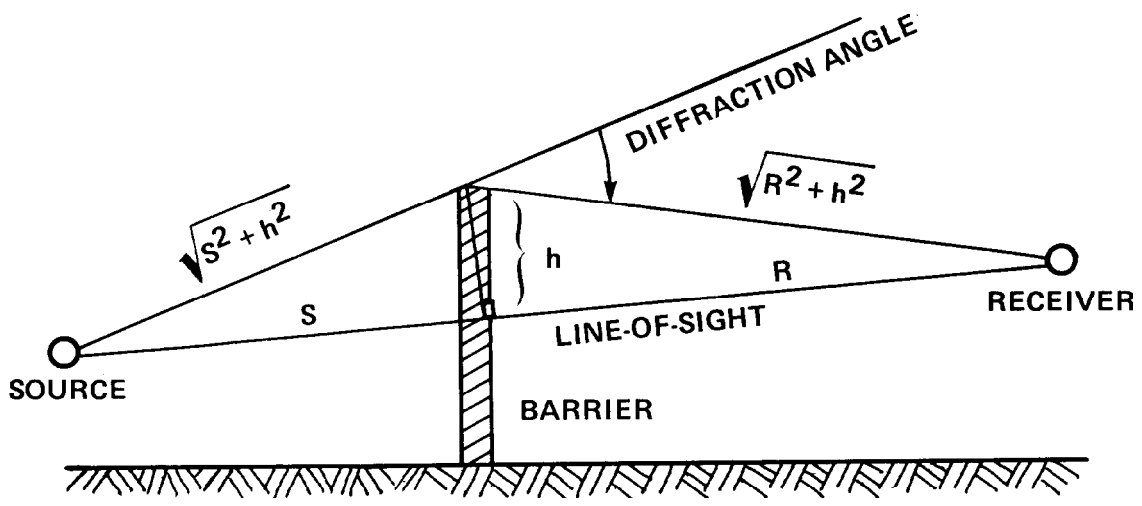

Figure 5-6. Parameters and Geometry of Outdoor Sound Barrier.

Table 5-6. Insertion Loss of an Ideal Solid Outdoor Barrier

Path-Length Difference, ft.	Insertion Loss, dB Octave Band Center Frequency, Hz								
	31	63	125	250	500	1000	2000	4000	8000
.01	5	5	5	5	5	6	7	8	9
.02	5	5	5	5	5	6	8	9	10
.05	5	5	5	5	6	7	9	10	12
.1	5	5	5	6	7	9	11	13	16
.2	5	5	6	8	9	11	13	16	19
.5	6	7	9	10	12	15	18	20	22
1	7	8	10	12	14	17	20	22	23
2	8	10	12	14	17	20	22	23	24
5	10	12	14	17	20	22	23	24	24
10	12	15	17	20	22	23	24	24	24
20	15	18	20	22	23	24	24	24	24
50	18	20	23	24	24	24	24	24	24

d. Edge effect of barriers. Figure 5-9 represents a plan view of a source and one end of a barrier wall. Near the end of the wall, the barrier effectiveness is reduced because some sound is refracted over the top of the wall, some sound is refracted around the end of the wall, and some sound is reflected and scattered from various nonflat surfaces along the ground near the end of the barrier. For critical problems, this degradation of the barrier near its end should be taken into account. Figure 5-9 suggests a simplified procedure that gives approximately the insertion loss (IL.) near the end of the barrier.

5-6. Reception of Outdoor Noise Indoors.

An intruding noise coming from an outdoor noise source or by an outdoor noise path may be heard by neighbors who are indoors.

a. Noise reduction (NR) of exterior constructions. When outdoor noise enters a building, it is reduced, even if the building has open windows. The actual amount of noise reduction depends on many factors: building construction, orientation, wall area, window area, open window area, and interior acoustic absorption. For practical purposes, however, the approximate noise reduction values provided by a few typical building constructions are given in table 5-7. For convenience and identification, the listed wall constructions are labeled with letters A through G and are described in the notes under the table. If the exact wall construction of a building is known, a more accurate estimate of the noise reduction can using the procedures of Chapter 4.

b. Indoor sound pressure levels. Indoor octave band SPLs are calculated by subtracting the table 5-7 NR values from the outdoor SPLs measured or estimated at the outdoor receiver position.

5-7. Combined effects, sample calculation.

A sample calculation show the steps for combining the material of this chapter. The calculations are completed in all octave bands and illustrate some portion of each item covered. Figure 5-10 shows an elevation view of a refrigerated warehouse and a nearby residence. Part A of the figure shows the proposed location of a cooling tower on top of a penthouse mechanical equipment room that has a direct line-of-sight path to the second floor windows of the dwelling. The sound power level of the cooling tower is known. The residence is of brick construction with open windows covering about 5 percent of the exterior wall area. It is desired to calculate the SPL for the cooling tower noise

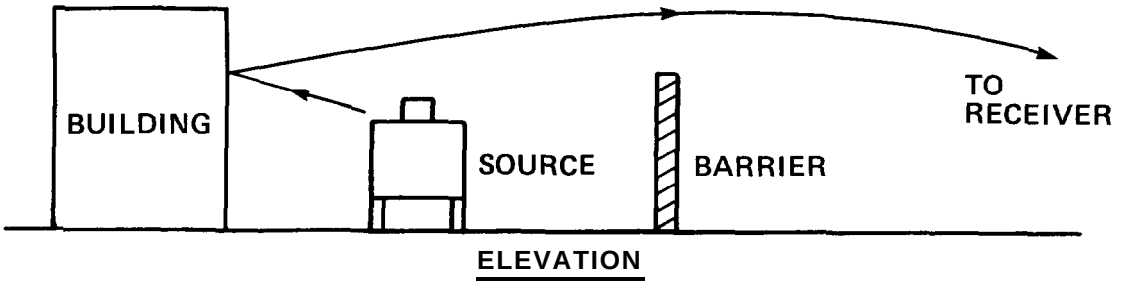

Part A. Reflection From a Wall Behind the Barrier

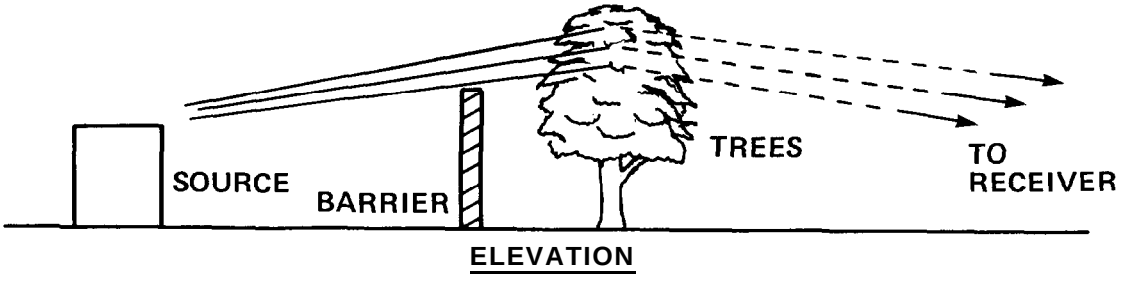

Part B. Reflection From Trees Over the Top of the Barrier

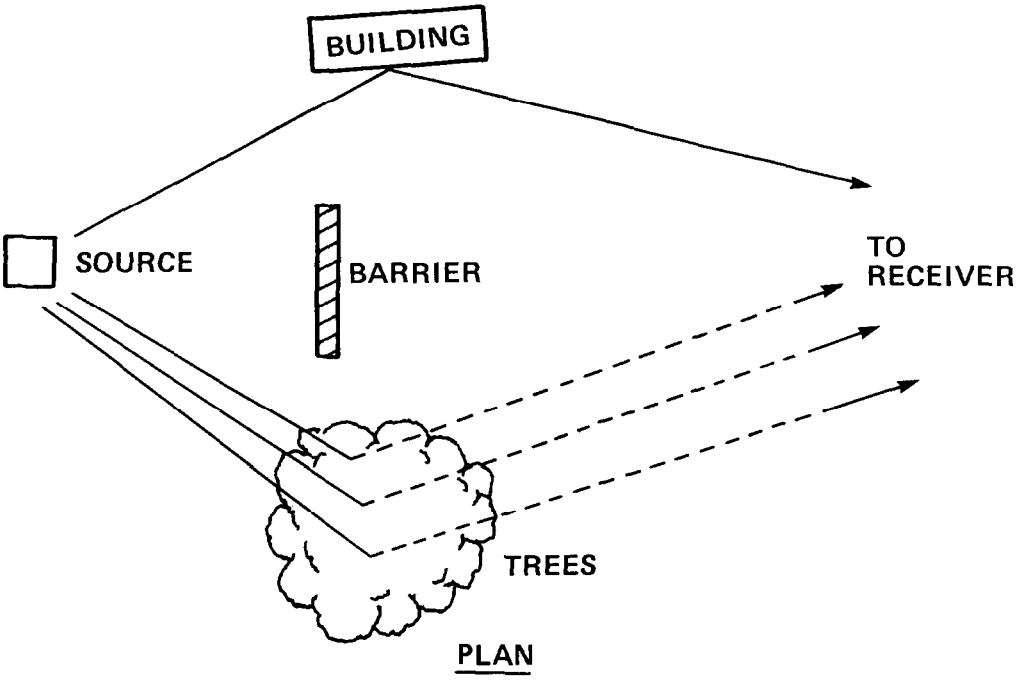

Part C. Reflection From Trees or Other Structures Around the Ends of the Barrier

Figure 5-7. Examples of Surfaces That Can Reflect Sound Around or Over a Barrier Wall.

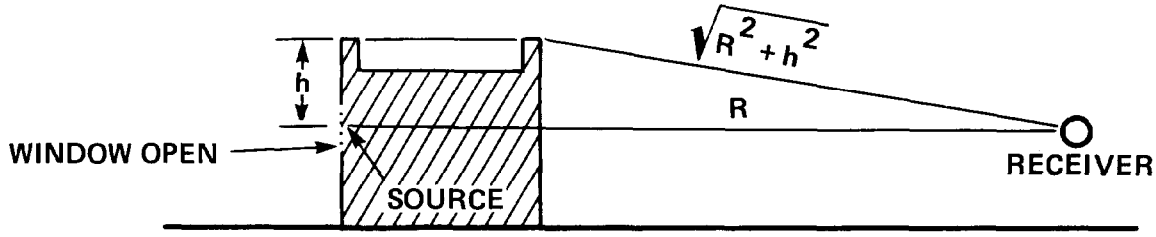

Part A. Source Radiates From a Hole in the Wall

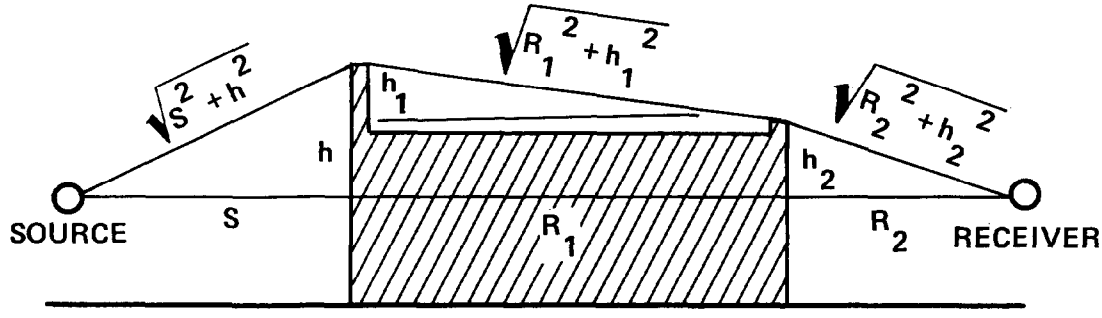

Part B. Compound Barrier, Constructed

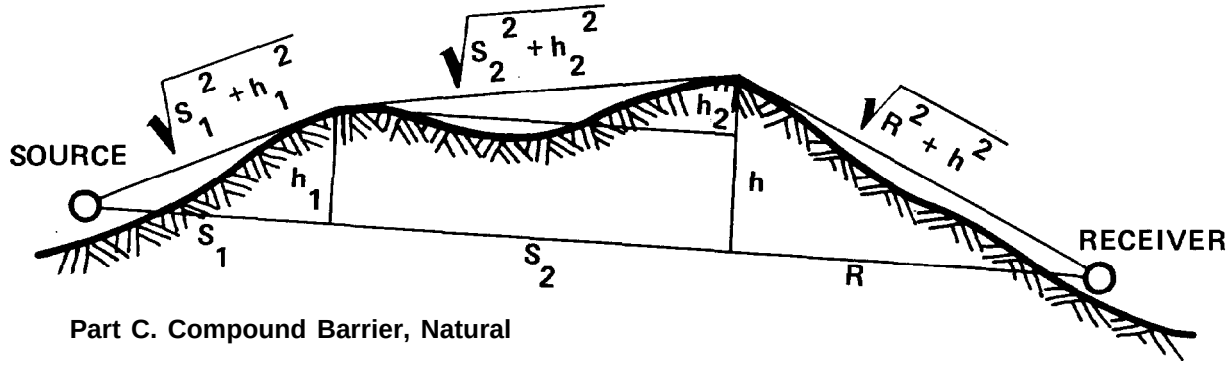

Part C. Compound Barrier, Natural

Figure 5-8. Compound Barriers.

received inside the upper floor of the residence. If the noise is excessive, what could be achieved by moving the cooling tower to the lower roof position shown in Part E of the figure? Assume the entire PWL radiates from the position near the top of the cooling tower.

(1) *Location "A".* Table 5-8 summarizes the data for this part of the analysis. Column 2 of the table gives the sound power level of the cooling tower, Column 3 gives the distance term for the 480-foot distance (from table 5-4) and Column 4 gives the calculated average SPL outside the upper windows of the residence (Co1 4 = Co1 2 - Co1 3). Column 5 gives the noise reduction for the type E wall (from table 5-7), Column 6 gives the indoor SPL, and Column 7 shows the indoor SPL values that correspond to an NC-25 curve, suggested here for sleeping. Comparison of the estimated SPL values with the NC-25 values shows excess noise of 8 to 12 dB in the 250- to 2000-Hz bands (Co1 8).

(2) *Location "B".* Table 5-9 summarizes the data for this alternate location of the cooling tower where it receives the benefit of the barrier effect of

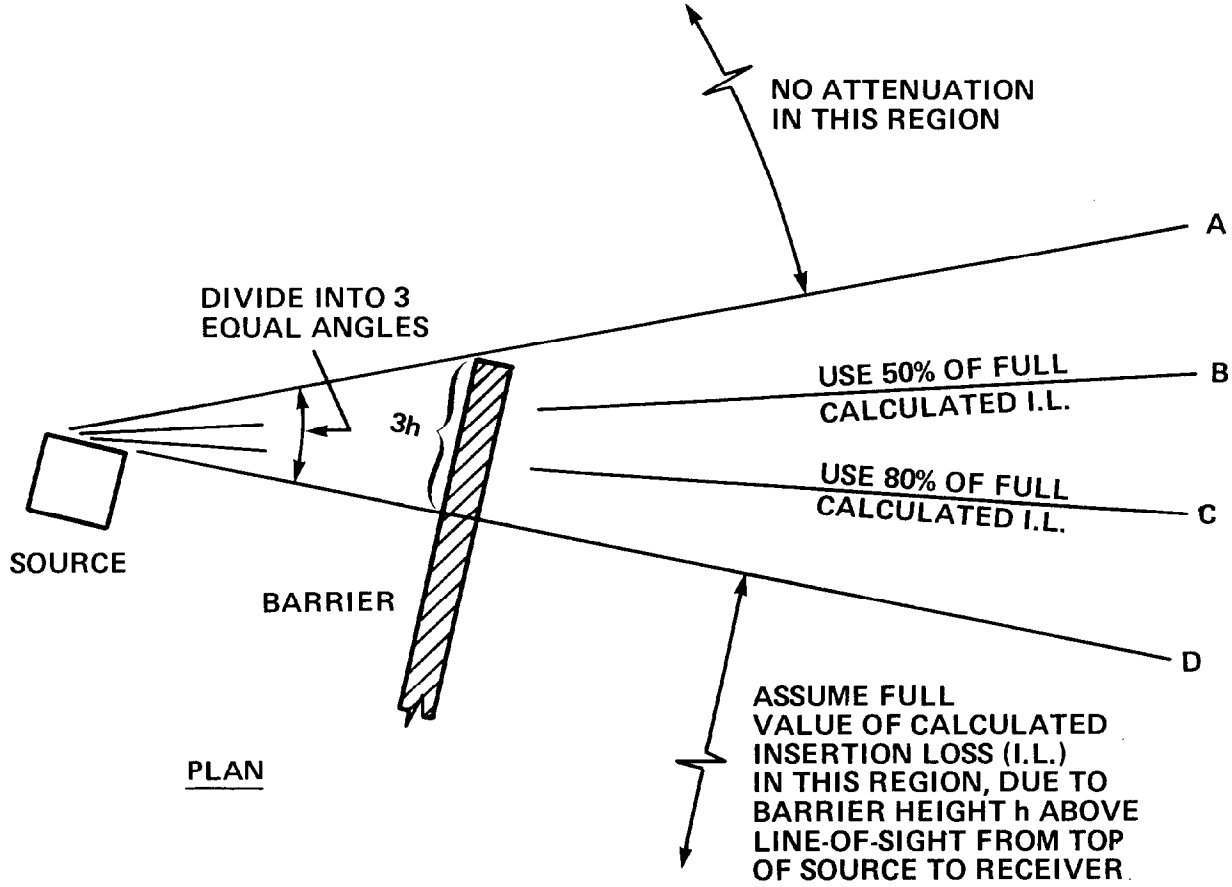

PROCEDURE

GIVEN: h IS HEIGHT OF BARRIER USED IN CALCULATION OF I.L.

STEPS:
1. **MARK OFF HORIZONTAL DISTANCE 3h FROM EACH END OF BARRIER (ONLY ONE END SHOWN IN ABOVE SKETCH)**
2. **DRAW LINES A AND D**
3. **DIVIDE ANGLE INTO 3 EQUAL PARTS**
4. **DRAW LINES B AND C**
5. **ASSIGN I.L. VALUES AS SHOWN; INTERPOLATE BETWEEN -VALUES AS REQUIRED**

Figure 5-9. Edge Effects at End of Barrier.

the penthouse mechanical room. The geometry for this barrier produces a path length difference of 0.23 feet. The insertion loss for the barrier is given in column 4 of table 5-9. Column 5 gives the average outdoor SPL at the residence as a result of the barrier and the slightly increased distance to the new location (Co1 5 = Co1 2 - Co1 3 - Co1 4). Column 7 gives the new indoor SPLs which are compared with the column 8 values of the NC-25 curve. A noise excess of only 3 dB occurs in one octave band. This would be considered a more nearly acceptable solution to the cooling tower noise problem.

5-8. Source Directivity.

The analysis procedures of this chapter assume that the sound source radiates sound equally in all directions. In some cases this is not the case, that is more sound energy will be transmitted in one direction when compared to other directions. This is referred to as the "Directivity" of the sound source. The directivity of a sound source may be an inherent result of the design or may be the result of the equipment installation very close to reflecting surfaces. In the example given above the cooling tower directivity was not taken into account. In Location A, the SPLs at

Table 5-7. Approximate Noise Reduction of Typical Exterior Wall Constructions.

Octave Frequency Band (Hz)	Wall Type						
	A	B	C	D	E	F	G
31	0	8	12	17	10	22	28
63	0	9	13	19	14	24	32
125	0	10	14	20	20	25	34
250	0	11	15	22	26	27	36
500	0	12	16	24	28	30	38
1000	0	13	17	26	29	33	42
2000	0	14	18	28	30	38	48
4000	0	15	19	30	31	43	53
8000	0	16	20	30	33	48	58

A: No wall; outside conditions.

B: Any exterior wall construction, with open windows covering about 5% of exterior wall area.

c: Any typical wall construction, with small open air vents of about 1% of exterior wall area; all windows closed.

D: Any typical wall construction, with closed but operable windows covering about 10-20% of exterior wall area.

E: Sealed glass wall construction, 1/4 in. glass thickness over approximately 50% of exterior wall area.

F: Approximately 20 lb/ft.^{2} solid wall construction with no windows and no cracks or openings.

G: Approximately 50 lb/ft.^{2} solid wall construction with no windows and no cracks or openings.

the residence would have been a few dB higher if the louvered surface of the cooling tower faced the residence or a few dB lower f the end surface of the cooling tower faced the residence. In Location B, the orientation of the cooling tower would have been less critical, because the barrier and other reflecting surfaces on the roof would tend to average out the cooling tower directivity characteristics. Typically source directivity is difficult to obtain. Source directivity for certain sources is included under appendix C. If source directivity information is unavailable assume that the sound source radiates uniformly in all directions.

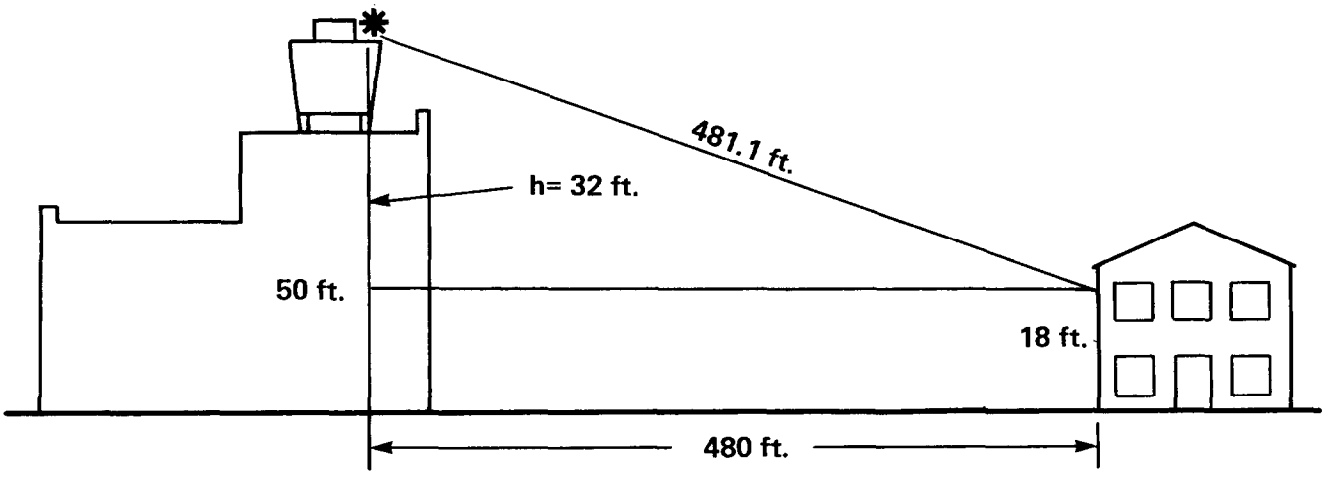

Part A. Proposed Location "A" of Cooling Tower

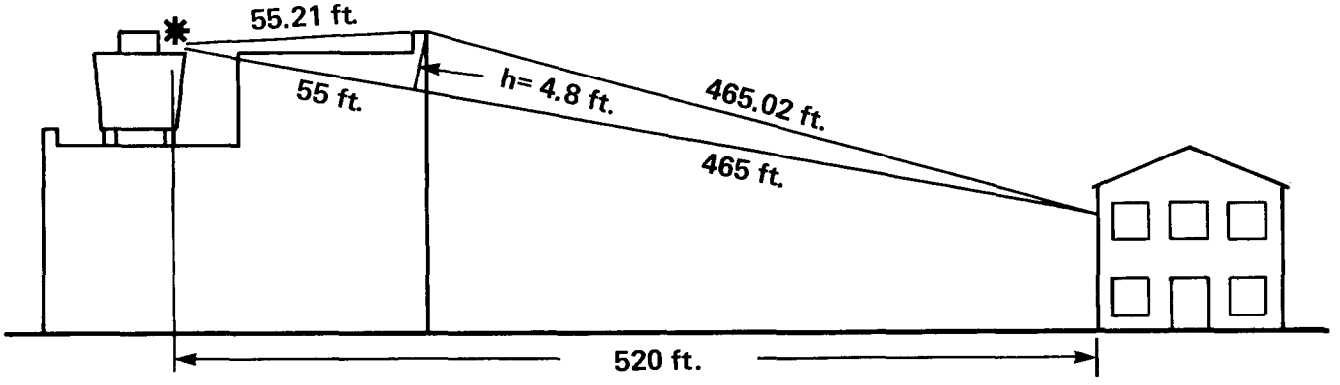

Part B. Alternative Location "B" of Cooling Tower

Figure 5-10. Elevation Profile of Cooling Tower Used in Example.

Table 5-8. Location "A" Cooling Tower Problem.

Col. 1 Octave Band Center Frequency (Hz)	Col. 2 Sound Power Level of Source (dB)	Col. 3 Distance Term for 480 ft Distance (dB)	Col. 4 Average Outdoor SPL at Residence (dB)	Col. 5 NR Wall Type B (dB)	Col. 6 Indoor SPL (dB)	Col. 7 SPL of NC-25 Curve (dB)	Col. 8 Noise Excess (dB)
31	108	52	56	8	48	--	--
63	109	52	57	9	48	54	--
125	112	52	60	10	50	44	6
250	110	53	57	11	46	37	9
500	108	53	55	12	43	31	12
1000	105	53	52	13	39	27	12
2000	100	54	46	14	32	24	8
4000	95	57	38	15	23	22	1
8000	91	60	31	16	15	21	--

Table 5-9. Location "B" Cooling Tower Problem

Col. 1 Octave Band Center Frequency (Hz)	Col. 2 Sound Power Level of Source (dB)	Col. 3 Distance Term for 520 ft. Distance (dB)	Col. 4 Barrier Insertion Loss for δ = .23 ft. (dB)	Col. 5 Average Outdoor SPL at Residence (dB)	Col. 6 NR Wall Type B (dB)	Col. 7 Indoor SPL (dB)	Col. 8 SPL of NC-25 Curve (dB)	Col. 9 Noise Excess (dB)
31	108	52	5	51	8	43		—
63	109	52	5	52	9	43	54	—
125	112	52	6	54	10	44	44	0
250	110	53	8	49	11	38	37	1
500	108	53	9	46	12	34	31	3
1000	105	54	11	40	13	27	27	0
2000	100	55	13	32	14	18	24	—
4000	95	58	16	21	15	6	22	—
8000	91	62	19	10	16	--	21	—

CHAPTER 6

AIRBORNE SOUND CONTROL

6-1. Introduction.

a. This chapter draws together much of the factual content of the earlier chapters and presents a systematic approach for evaluating noise data and arriving at design decisions for controlling the noise of electrical and mechanical equipment transmitted between room within a building and to other nearby structures. The chapter concludes with discussions of the various noise control treatments that are practical and available for solution of equipment noise problems. Almost all sound analysis problems can be divided into considerations of the; 1) Source; 2) Path and; 3) Receiver. Noise and vibration for specific problems may be reduced by using the following system approach:

(1) Reduce noise and vibration at the source by using quieter equipment or noise-reducing modifications.

(2) Prevent noise transmission by using barriers, and prevent vibration transmission by using vibration isolators.

(3) Relocate the receiver.

b. Sources of mechanical equipment sound are provided in appendix C. Considerations for Paths are given in chapters 3, 4 and 5. Criteria for acceptable sound is given in chapter 2. Chapter 7 provides a similar discussion for sound transmitted via air distribution systems in buildings. Considerations for vibration control are given in chapter 8.

6-2. Indoor Sound Analysis.

a. The approach suggested here is essentially a flow diagram of sound from source to receiver, following certain prescribed steps.

(1) The SPL or PWL values are obtained for each noise source (from appendix C or other available source date).

(2) The acoustic conditions inside the MER source room and in the receiving rooms are calculated.

(3) The SPL values of all equipment sources are extrapolated to the interior MER walls and surfaces of interest (chap 3).

(4) Noise criteria are selected for all the receiving rooms of interest (chap 2).

(5) Wall and floor designs are selected to permit acceptable amounts of equipment noise into the adjoining spaces (chap 4).

(6) Additional material in paragraph 6-6 is considered if special noise control treatments are required. The procedures offered here are simple and relatively easy to follow, while designs are still on paper. Remedial treatments are difficult, expensive, time-consuming, and frequently less effective after the completed designs are fixed in steel and concrete.

b. In some cases, it is found that the normally used walls or floors are not adequate, and improved versions should be substituted. Three additional factors should be considered in an overall acoustic design; these factors are aimed at finding the best mixture of practicality and total economy. One involves the possibility of using noise specifications to limit the amount of noise produced by noise-dominating equipment, the second involves use of noise control treatments on particularly noisy equipment, and the third involves building layout and equipment arrangement.

(1) *Use of noise specifications.* The use of noise specifications is presented in chapter 9. It should be kept in mind that the noise levels quoted in the manual represent the 80- to go-percentile range of the data studied and that it can reasonably be expected that many suppliers of equipment can furnish products that are a few decibels quieter than these in the manual, without burdening the job with excessive costs. Therefore, when it becomes apparent that one or two pieces of equipment stand out above all others in noise levels and actually dictate the need for unusually heavy walls or floors, its good engineering to prepare noise-level specifications on those pieces of equipment and require that they be brought under reasonable noise limits. If this approach is used successfully, reduced noise can be achieved and less expensive building designs can be used. It would be reasonable, first, to specify sound levels that range about 3 dB below the levels quoted in the manual. Such specifications would not seriously limit the availability of equipment, but they would weed out the noisiest equipment.

(2) *Use of noise control treatments.* This subject is discussed in paragraph 6-6. For some types of equipment, a noise control treatment may be more practical and less expensive than the problems of accommodating the untreated noisy equipment with strengthened building structures.

(3) *Building layout alternatives.* By recognizing and applying the material in the manual, many noise problems can be reduced during the design stage. In the building layout, critical spaces should be moved away from the mechanical rooms

and, where possible, "buffer zones" should be placed between the noisy and the quiet rooms. In the MER, the noisiest equipment should be moved away from the common walls that join the critical rooms; and when reverberant sound levels pervade the entire MER and control the design, sound absorption may be applied to reduce those reverberant levels.

6-3. Outdoor Sound Problem And Analysis.

The basic procedure here, also, is to follow the sound path from the source to the receiver, applying certain adjustments and calculations along the way.

a. The SPL or PWL values should be determined for each source that can radiate noise outdoors.

b. The outdoor sound propagation factors of distance, air absorption, and anomalous excess attenuation should be applied for the prevailing temperature and humidity conditions.

c. Proper adjustments should be made for terrain, vegetation, and barrier effects encountered by the sound.

d. All the pertinent data are collected and summarized and the outdoor and indoor SPLs are estimated for the various neighbors of interest.

e. The expected neighbor reaction to the outdoor noise is estimated and the expected indoor SPLs are compared against the indoor noise criterion applicable to the neighbor's building.

f. Available noise control treatments and operational changes are considered (set 6-6), if noise reduction is required to achieve satisfactory response of the neighbors to the outside noise. The steps of this procedure are followed in the accompanying example.

6-4. Quality Of Analysis Procedure.

a. How accurate are the data? When numerical values are assigned to PWLs, SPLs, TLs, Room Constants, noise criteria, etc., the question of tolerances arises. Will a given piece of equipment have exactly the SPL estimated for it? Will the TL of a wall actually equal the TL assumed for that wall in the manual? Will the noise be distributed around the inside of a room in exactly the way it is estimated, using the methods and assumptions offered in the manual? Is the reaction of "average" people well enough known to predict with accuracy the noise levels that they will consider acceptable? Will every individual in a group of "average" people respond in the manner assumed for the "average" people? The answer is obviously "No" for each of these questions! Then, to what extent are the results of the evaluation valid?

b. Variations and uncertainties in the individual data. It is necessary to realize that small errors or discrepancies or uncertainties exist with each bit of quoted data, and it is not realistic to rely on the analysis method to the nearest one or two decibels. It is largely for that reason that labels such as "preferred", "acceptable" and "marginal" are used. These labels offer some gradations in degree of reliability of the final values. It is even possible that, if the noise levels of certain specific pieces of mechanical equipment are much lower than the design estimates used in the manual, a design calculated to be "unacceptable" could actually turn out to be "acceptable." This result should not be counted on, however, as a means of avoiding a difficult problem. Of course, there is also the possibility that in a particular installation many of the statistical factors will work together to produce a "marginal" condition where the analysis showed "preferred" or "acceptable" condition, etc.

c. System reliability. In most cases, the procedure will produce a workable design. The methods and techniques described here are based on many experiences with noise control problems, and these methods have helped produce many satisfactory or improved installations. (Sometimes the economics of a situation may not justify an entirely satisfactory solution for all concerned, but proper use of the analysis can bring a desired and predictable improvement.) The manual will have served a sufficiently useful purpose if it reveals only that a problem is so serious that the manual alone cannot solve the problem and that special assistance or special designs may be required.

d. Aids in decision-making. A certain amount of judgment may enter into some design decisions. A suggestion is offered here for helping guide the decision for three types of situations.

(1) When a particular design involves a crucial area, a conservative approach should be followed. The design should not be weakened in order to try "to get by" with something simpler.

(2) When a particular design involves a distinct threat to someone's safety or well-being, a conservative approach should be used. Examples could be an employee who might suffer hearing loss in an MER because a separate control room was not provided, or a tenant who would not pay rent because of noise coming from an overhead MER, or a neighbor who might go to court because of disturbing noise. On the other hand, noise in a corridor or a lobby is of much less concern to someone's well-being.

(3) If a particular design involves a permanent structural member that is not easily modified or corrected later (in the event it should prove

unsatisfactory), a conservative approach should be used. A poured concrete floor slab is not easily replaced by a new and heavier floor slab. On the other hand, a lightweight movable partition can be changed later if necessary. A muffler can be added later or enlarged later if necessary. Compromises may be justified if the compromised member can be corrected later at relatively small extra cost. Compromises should not be made when the later corrective measure is impossible or inordinately expensive.

6-5. Noise Control Treatments.

a. General applications. A primary advantage of the manual and of the various noise-analysis procedures offered in the manual is that it elevates the awareness of the architect and engineer to problems of noise and vibration. This is an important first step to noise control. Without awareness, the noise problem is ignored in the design, and later problems in remedial steps are compounded. In most building situations, noise control is provided by application of the basic contents of the manual:

(1) Adequate wall and floor-ceiling constructions should be designed to contain the noise and limit its transmission into adjoining areas.

(2) Acoustic absorption material should be used in either or both the sound transmitting room and the sound receiving room to absorb some of the sound energy that “bounces” around the room. Quantitative data and procedures for incorporating sound absorption materials are included in the tables and data forms.

(3) Transmission loss data should be used to select various types of construction materials for the design of noise enclosures.

(4) Building layouts should be modified in an attempt to redistribute noise sources in a more favorable arrangement, bring together noisy areas in one part of a building and quiet areas in a different part of the building (to minimize their reaction on one another), and use less critical “buffer zones” to separate noisy and quiet areas.

(5) Vibration isolation mounts should be used for the support of mechanical or vibrating equipment. Details of such mounts are given in chapter 9.

(6) Mufflers should be used to control noise transmission through air passageways.

(7) Duct lining treatments should be used to control noise transmission through ducted connections.

(8) Specifications should be used to limit the noise output of purchased equipment for use in the building; this is suggested and discussed briefly in chapter 10 of this manual.

(9) The basic elements of acoustics should be understood and used in order to work intelligently with SPL and PWL data for many types of electrical and mechanical noise sources, know the effects of distance (both indoors and outdoors), appreciate the significance of noise criteria, and be able to manipulate acoustic data in a meaningful and rational way. A few of these items are discussed below.

b. Absorbers. Acoustical ceiling and wall panels are the most common sound absorbers. Absorbers are rated by the ratio of noise absorbed to noise impacted on the absorber’s surface. A coefficient of 1.0 indicates 100 percent absorption; a coefficient of zero indicates 0 percent absorption. Noise Reduction Coefficient (NRC) is the average coefficient of sound absorption measured at 250 Hz, 500 Hz, 1 kHz, and 2 kHz. Sound absorption should be designed to absorb the frequencies of the sound striking it. For example, a transformer enclosure should have an absorption coefficient of at least .75 in the 125 Hz band (the sound of electrical hum is twice the 60 cycle powerline frequency). Auditoriums should have even absorption over a wide frequency range for a balanced reverberant sound.

(1) *Test methods.* There are three basic mountings for sound absorption tests used by ASTM (ASTM E 795-83): 1) Type A.-hard against a concrete surface (formally designated as No. 1), 2) Type D.-with a 3/4-inch airspace behind the test material, such as a wood furring strip (formally designated as No. 2), and 3) Type E.-with a 16-inch airspace behind the test material, such as an acoustical ceiling (formally designated as No. 7). See table 5-1 for absorption coefficients of some typical building materials.

(2) *Core material.* Absorbers consist of a core material, usually fibrous or porous, with a facing as a cover. Fibrous cores are typically 1 inch thick for general noise control, and 2 inches thick for auditoriums, music, or low frequency absorption. If a minimum 2 inch airspace is provided behind a 1 inch core, the effect is approximately equivalent to a 2 inch thick core. One inch thick fibrous cores have an NRC of .75, and 2 inch thick fibrous cores have a NRC of .95 with a Type D mounting.

(3) *Facings.* Facings over the acoustical core material serve as both a visual and a protective screen. They are typically cloth, perforated vinyl, wood screens, or expanded metal. Expanded metal, such as plasterer’s metal lath, is relatively vandal-proof. Expanded or perforated metal facings should be at least 23 percent open, 33 percent is preferable.

(4) *Ceilings.* Acoustical ceilings are of two basic types: mineral fiber and fiberglass. Mineral

ceiling tiles with a fissured pattern have an NRC of .55 to .65 with a Type E (or No. 7) mounting. Fiberglass ceiling tiles have an NRC of .95 and are normally used in open office design. Fiberglass ceiling tiles, however, have no resistance to sound traveling through them, whereas 5/8 inch standard mineral tiles have a 35 to 40 STC rating for sound transmission from one office to another where the dividing wall stops just above the dropped ceiling line. Lab ratings for such walls can be achieved by installing a baffle over the wall in the ceiling plenum, or by extending the walls up to the underside of the next floor.

c. Enclosures. From the material given in the manual, it is possible to estimate the noise levels inside a solid-wall enclosure that contains a piece of noisy equipment and to estimate the noise levels that will be transmitted from that enclosure in to the surrounding spaces.

(1) In acoustic terms, an enclosure is considered to be an almost air-tight chamber containing the noise source. Small cracks around doors are known noise leaks and cannot be tolerated if a high degree of sound isolation is required. The walls of the enclosure must be solid and well-sealed. If air can escape through the enclosure, sound can escape through the enclosure. A favorite analogy in acoustics is that the same amount of sound power can pass through a 1-in.2 hole as through a 100-ft.2 6-inch thick solid concrete wall. A seemingly negligible crack around a door or at the ceiling joint of a wall can have much more than 1 in.2 of area.

(2) Where openings in an enclosure are required, they must be given adequate acoustic treatment in order not to weaken seriously the effectiveness of the enclosure. Ventilation ducts may be muffled, clearance holes around pipes, ducts, and conduit must be sealed off airtight, and passageways for material flow must be protected with “sound traps” (mufflers).

d. Barriers, partial-height partitions. Many offices, shops, and tool rooms contain barriers or partial-height partitions that serve to separate areas or people or functions. When used with nearby acoustically absorbent ceilings, these partitions can provide a small amount of acoustic separation-possibly 3 to 5 dB of noise reduction in the low-frequency region and 5 to 10 dB in the high-frequency region, depending on the geometry and the absorption in the area. Where noise reduction values of 20 to 30 dB are desired, partial-height partitions would be useless. A caution is offered here against use of partial-height partitions as control room separators or as small office enclosures out in the middle of an engine room or as a telephone booth enclosure in the midst of MER noise.

e. Damping materials. Damping is the resistive force to vibratory motion. Sheet metal has low damping properties and will ring when impacted. Loaded vinyls and lead both have high mass and high damping and will thud when impacted. Loaded vinyl has replaced lead in general usage because of lower cost, and also because loaded vinyl is available in sheets with an adhesive backing. The loaded vinyl may be cut with scissors and directly applied to noisy ducts or sheet metal at a low cost, usually with good results.

f. Combination. Combination foam absorbers and loaded vinyl barriers in sandwich type construction are available with adhesive backs, and are often used to reduce noise in vehicle cabs or on vibrating equipment covers. Lagging is the process of applying a fibrous or porous material, such as 3-pound density fiberglass, over a noisy duct or pipe, and then covering the fiberglass with sheet metal or loaded vinyl. This method is useful on steam piping, valves, ducting, and fans. Lagging may not be used where it could cause excessive heat buildup, such as on compressors. Enclosures, made of plywood or sheet metal with fiberglass used as an absorber on the inside, can be effective in reducing machinery noise. Enclosures of clear plastic panels can be used where visibility is required. Ventilation should be provided on compressors or computer enclosures by installing foam or fiberglass lined duct at the bottom for cool inlet air, and at the top for hot exhaust air. Enclosures should be carefully fitted together with no gaps which could leak noise. Convenient access panels should be designed into all noise control enclosures.

g. Mufflers. Mufflers are characterized as either “reactive mufflers” or “dissipative mufflers.” Reactive mufflers usually consist of large-volume chambers containing an internal labyrinth-like arrangement of baffles, compartments, and perforated tubes. Reactive mufflers smooth out the flow of impulsive-type exhaust discharge and, by the arrangement of the internal components, attempt to reflect sound energy back toward the source. There is usually no acoustic absorption material inside a reactive muffler. Dissipative mufflers are almost entirely made up of various arrangements of acoustic absorption material that dissipates or absorbs the acoustic energy.

(1) *Reactive mufflers.* Reactive mufflers are used almost entirely for gas and diesel reciprocating engine exhausts. Somewhat more detailed information on the performance and use of reac-

tive mufflers is included in the TM5-805-9/AFM 88-20 manual.

(2) *Dissipative mufflers.* As the name implies, these mufflers are made up of various arrangements of acoustically absorbent material that actually absorbs sound energy out of the moving air or exhaust stream. The most popular configuration is an array of "parallel baffles" placed in the air stream. The baffles may range from 2 inches to 16 inches thick, and are filled with glass fiber or mineral wool. Under severe uses, the muffler material must be able to withstand the operating temperature of the air or gas flow, and it must have adequate internal construction and surface protection to resist the destruction and erosion of high-speed turbulent flow. These mufflers should be obtained from an experienced, reputable manufacturer to insure proper quality of materials, design, workmanship, and ultimately, long life and durability of the installation.

h. Packaged duct mufflers. For ducted air handling or air-conditioning systems, packaged duct mufflers can be purchased directly from reputable acoustical products suppliers. Their catalogs show the available dimensions and insertion losses provided in their standard rectangular and circular cross-section mufflers. These packaged duct mufflers are sold by most manufacturers in 3-foot, 5-foot and 7-foot lengths. They are also usually available in two or three "classes," depending on attenuation. The mufflers of the higher attenuation class typically have only about 25 to 35 percent open area, with the remainder of the area tilled with absorption material. The lower attenuation classes have about 50 percent open area. The mufflers with the larger open area have less pressure drop and are known as "low pressure-drop units." The mufflers with the smaller open area are known as "high pressure-drop units." In critical situations, muffler "self-noise" may also be a problem with these duct mufflers. If high-speed air is required, the manufacturer can usually provide self-noise data. When ordering special-purpose mufflers, one should specify the flow speed and the temperature of the air or gas flow, as these may require special surface protection and special acoustic filler materials.

i. Duct lining. Duct lining is used to absorb duct-transmitted noise. Typically, duct lining is 1 inch thick. Long lengths of duct lining can be very effective in absorbing high-frequency sound, but the thin thickness is not very effective for low frequency absorption. The ASHRAE Guide can be used to estimate the attenuation of duct lining. Lined 90-degree turns are very effective in reducing high-frequency noise.

CHAPTER 7

AIR DISTRIBUTION NOISE FOR HEATING, VENTILATING, AND AIR CONDITIONING SYSTEMS

7-1. Introduction.

In this chapter consideration is given to the sound levels resulting from the operation of Heating, Ventilation and Air Conditioning (HVAC) systems in buildings. Information is provided on the most common HVAC equipment found in many commercial office buildings, how sound is propagated within ducted ventilation systems and the procedure for calculating sound levels in rooms from ventilation systems.

7-2. General Spectrum Characteristics Of Noise Sources.

The most frequently encountered noise sources in a ducted air distribution system designed to deliver a constant volume of air are fans, control dampers, and air outlets such as diffusers, grilles, and registers (return air grilles with dampers). In a variable volume system terminal units, such as variable air valves (VAVs), fan powered air valves, and mixing boxes, are an additional frequently encountered noise source. Operation of any of these identified noise sources can result in noise generated over most of the audio frequency spectrum. Typically, however, centrifugal fans generate their highest noise levels in the low frequency range in or below the octave centered at 250 Hz. Diffusers, and grilles, however, typically generate the highest noise levels in the octaves centered at 1000 Hz, or above. In between these low and high frequency sources, terminal units produce their highest noise levels in the mid-frequency range in the octaves centered at 250, 500, and 1000 Hz bands. In addition to these frequency characteristics, the normal sound propagation path between the various system sources and an occupants of the space served influences the typically observed spectra. Thus, the fans in a system are typically somewhat remote to an observer, and the fan sound is attenuated by the properties of the path including noise control measures. However, this path attenuation is greatest in the mid-, and high frequency range, and thus the noise reaching the receiver will primarily be in the low frequency range as a result of both the source and path characteristics. With diffusers and grilles, however, there is little or no opportunity to provide attenuation between the source and the receiver, and thus the high frequency noise of the source alone determines the spectrum content. With air terminal units the most direct path is often sound radiating from the case of the unit and traveling through a ceiling, usually acoustical, direct to the observer in the space being served. The attenuation of a typical ceiling increases slightly with frequency, and thus the typical noise of an air terminal unit in an occupied space will tend to shift downward by an octave to have its highest sound pressure levels in the octaves with center frequencies at 125, 250, and 500 Hz. Thus, in summary, when a system is designed to achieve good acoustical balance among the various sources, fan noise will control the noise level in the low frequency range, air terminal units will control in the mid-frequency range, and air outlets will control in the high frequency range.

7-3. Specific Characteristics Of Noise Sources

a. Fans. To determine the requirements for noise control for a ducted air distribution system one of the primary requirements is to determine the octave band sound power level of the fan noise at the discharge and intake duct connections to a fan. These sound power levels can be determined by a methodology described in appendix C, or obtained from a fan manufacturer for the specific application and this is generally the preferable method. It should be noted that the method given in appendix C yields the sound power level for a fan selected to operate at its maximum efficiency, however the ASHRAE method suggests a correction factor, “C” on table C-13c, for off-peak operation at various fan efficiencies. With a system designed to deliver a constant volume to a space it is usually possible to operate a properly selected fan at or near its maximum efficiency. However, for a variable volume system, with a fan operating at a constant speed, the static efficiency will generally be significantly below its maximum static efficiency. Thus, for variable volume systems the adjustment to the power level for operating efficiency is very important. Variable speed drives allow the fan to operate at or near the peak efficiency for different air quantities and static pressures. In this instance the fan efficiency can be maintained near its maximum, and the sound power levels are reduced as the air quantity delivered and the static pressure are reduced in accordance with equation C-5. In order to use equation C-5 and table C-13c it is necessary to

determine the static efficiency of the fan, and to compare it with the maximum static efficiency of the type of fan being utilized. The operating static efficiency of a fan may be obtained from the following:

Static Efficiency = (Q x P)/(6356 x BHP)(eq 7-1)

where;

Q = air quantity is in cubic feet/minute,

P = static pressure is in inches of water, and

BHP = brake horse power.

This calculated static efficiency is then compared with the maximum efficiency for the fan, which may be taken as 80% for a centrifugal fan with airfoil blades; 75% for centrifugal fans with backwardly inclined, single thickness blades; 70% for a vane axial fan; and 65% for a centrifugal forward curved fan. The ratio of the calculated static efficiency to the maximum static efficiency is then used to determine the correction for off-peak efficiency as shown on part C of table C-13. For example if the calculated static efficiency for a forward curved fan is 62%, then the ratio of the calculated static efficiency to the maximum static efficiency is 62% divided by 80%, or approximately 82%. In other words the actual static efficiency is approximately 82% of the maximum static efficiency and the off-peak correction from part C of table 10-13 is 6 dB.

b. Air terminal units. Air terminal units are components used in ducted air distribution systems to maintain the desired temperature in a space served by varying the volume of air. Basically these units consist of a sheet metal box containing a damper, controls and a sensor, and they are usually connected to a supply header via a flexible circular duct. They usually discharge air to one or more diffusers via rectangular sheet metal ducts. In their simplest form these units are designated as variable air valves (VAVs). However, units are also available with an auxiliary fan in the box to supplement the air delivered by mixing induced air from the ceiling plenum with the primary air from the supply header. Units with these auxiliary fans are termed fan powered terminals (FPTs), and they are available in two forms. In one form the fan only operates when it is necessary to mix warm air from the ceiling plenum with the primary air, and this type of unit is designated as a "parallel" FPT. The intermittent operation of the fan in this type of unit leads to some increased awareness of the noise generated. In a second form the fan operates continuously and handles both the primary air and the return air from the ceiling plenum. Both the primary air and return is mixed in varying quantities to maintain a constant volume delivered to the space served. This type of unit is designated as a "series" FPT. The noise of any air terminal unit can propagate to the space served via a number of paths, but the two prominent paths are (1) via the units discharge ductwork to the connected outlet(s), or (2) by direct sound radiated from the casing of the unit into a ceiling plenum and then through a ceiling (usually acoustical) into the space served. Manufacturers publish data giving the octave band sound power level for the unit discharge sound, and the casing sound. These data are usually measured in accordance with Air-Conditioning and Refrigeration Institute (ARI) Standard 880-89. With a VAV terminal unit the measurements for the casing sound measure only the casing sound. For a fan powered box (FPT) the casing sound data includes both the sound radiated by the casing, and the fan sound radiated from the air intake opening to the unit casing.

(1) *Noise level prediction.* To predict the sound level in an occupied space produced by a terminal unit serving a space, procedures suggested in ARI Standard 885-90 may be used. For the duct borne sound, radiated by the air outlets, the estimation procedure involves two steps: (1) reducing the sound power of the discharge, by the insertion loss (IL) of the duct system between the unit outlet and the space outlets, to obtain the unit sound power emitted into the room from the air outlets, and (2) applying the octave band "Rel Spls" to obtain the octave band sound pressure levels in the room. For the casing radiated sound again two steps are required to estimate the sound pressure levels in a room with a unit located in the ceiling plenum, these are: (1) a plenum/ceiling transfer factor which combines the insertion loss (IL) of the ceiling and the absorption of the plenum is subtracted from the published power level for each octave band, and (2) the room factor for the space is subtracted from the power levels transmitted through the ceiling. Values for the Plenum/Ceiling Transfer for typical acoustical ceilings are given in table 12.1. These values are applicable to typical ceiling construction, with some openings for lights and return air. These values do not apply when the terminal unit is located directly above a return air opening.

(2) *Noise control* Typical noise control measures for air terminals, including VAVs, fan powered units, and mixing boxes are:

(a) Locating units above spaces such as corridors, work rooms, or open plan office areas. Do not locate VAV units over spaces where the noise should not exceed an NC or RC 35. Do not locate fan powered terminal units (FPT), which are sized

Table 7-1. Plenum/Ceiling Transfer Factor.

	Octave Band Center Frequency (Hz)						
	63	125	250	500	1000	2000	4000
Type 1 Fiberglass Tile 1/2" - 6 lb/cu.ft	4	8	8	8	10	10	14
Type 2 Mineral Fiber Tile 5/8" - 35 lb/cu.ft	5	9	10	12	14	15	15
Type 3 Sheet Rock 5/8" - 22 lb/sq.ft	10	15	21	25	27	26	27

Note Values for ceilings with typical penetrations and light fixtures.

for 1,500 CPM, over spaces where the noise should not exceed an NC or RC 40.

(b) Locating the units at least 5 ft. away from an open return air grille located in the ceiling,

(c) Installing sound attenuators, provided as options by some manufacturers, or acoustically lined sheet metal elbows, at the induced (return) air openings in the casings of fan powered units, or

(d) Installing acoustically lined elbows above ceiling return air openings when they must be near, or directly below a terminal unit.

c. Diffusers, Grilles, and Control Dampers. Diffusers and grilles are devices used to deliver to, or return air from, a building space. They are available in rectangular and circular forms, and in a linear or strip form. Generally these devices include vanes, bars, tins, and perforated plates to control the distribution of air into the space. All of these elements which make up a diffuser or grille act as spoilers in the air stream. When the air flows across the spoilers noise is generated that, for a particular diffuser or grille design, varies by the 5th to the 6th power of the velocity. Because of the wide variety in diffuser design, and the sizes available, manufacturers publish sound level data in their catalogs. Most manufacturers only provide the NC level that the diffuser noise will reach with different quantities of air flow in a room where the "Rel SPL" is 10 dB. Thus for a room with different acoustical properties an adjustment has to be made to the quoted NC value. Some manufactures also publish the sound power level of the diffusers or grilles in octave bands. As this form of information is more useful for design than the NC values, octave band data should be requested for any facility where sound level is considered critical. In using the manufacturer's data care should be taken to note the data usually applies only to diffusers in an ideal installation. For example placing a damper, even in an open position, behind a diffuser or grill may increase the noise generated by up to 15 dB. In general, where sound level is critical dampers should not be placed directly behind diffusers, but should preferably be located where the diffuser duct branches off the header, or main duct. In this location any damper generated sound can be attenuated by acoustic lining in the diffuser drop, and any resulting non-uniformity in the air flow delivered to the diffuser will be much less than if a damper is placed directly behind the diffuser. Also the position of deflection bars in grilles, and vanes in diffuser can change the level of the noise generated. Thus, these factors need to be noted when using the data to predict diffuser sound levels in a space. Finally, in regard to published data it should be noted that the data are taken with uniform air delivery to or from the device. In application, this condition may not be met as shown in figure 12.1 showing that with non-uniform flow caused by short duct connections to a header duct, or by badly misaligned flexible duct the sound levels may be quickly increased by 5, 10, or 15 dB.

7-4. Control Of Fan Noise In A Duct Distribution System.

Fan noise propagating along a duct system may be reduced by (1) propagation along the duct, (2) by

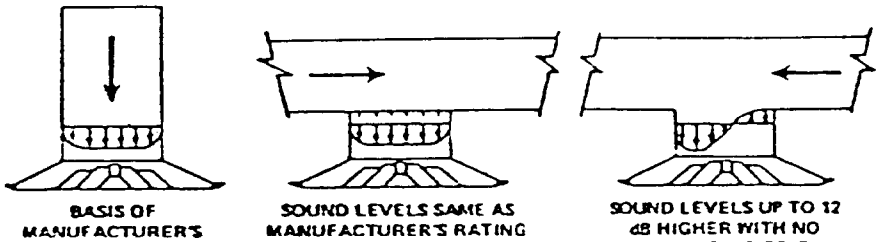

A. Proper and Improper Airflow Conditions to an Outlet

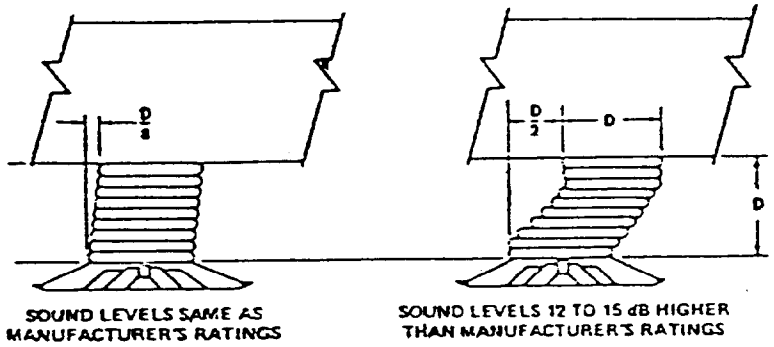

B. Effect of Proper and Improper Alignment of Flexible Duct Connector

Figure 7-1. Good and Poor Air Delivery Conditions to Air Outlets.

duct branching, (3) by elbows, and (4) by end reflection.

a. Propagation in the duct distribution system. Noise attenuation with propagation in a duct system results from; 1) natural energy losses as sound is transmitted through sheet metal duct walls to the space through which the duct passes; and 2) by absorption of energy in the internal glass fiber lining of the sheet metal duct.

(1) *Unlined duct.* Table 7-2 lists the natural attenuation, in dB/ft for unlined rectangular sheet metal ducts without external thermal insulation. This attenuation, attributed to sound transmission through the duct walls, can be significant, in the low frequency range, for long lengths of duct. The attenuation values are given as a function of the ratio of the duct perimeter P and the duct cross sectional area A. These data are applicable only to normal sheet metal rectangular ducts typically used in the air conditioning industry. These data should not be used for ducts using metal heavier than 16 ga.; for circular ducts which are relatively stiff) or for ducts made of glass fiber board.

(2) *Internally lined duct.* The octave band attenuation, in dB/ft, that is expected due to absorption of sound by 1 inch thick internally duct lining, is given in table 7-3. As noted on the table, the data can be used for any length of duct in the unshaded portion, but in the shaded portion the attenuation should not be applied for more than 10 ft. in any straight duct run between elbows or turns. Note these attenuation factors are for the effects of the internal lining only and do not include the effects of natural attenuation as given on table 7-2.

For the bands centered at 63, and 125 Hz the total attenuation for a lined duct is a sum of the natural (table 7-2) and lined duct (table 7-3) attenuations. For example in a 24 x 24 inch duct the attenuation in the 63 Hz octave is 0.05 dB/ft due to internal lining (table 7-3), plus 0.3 dB for the loss associated with sound transmission through the duct wall (table 7-2 with a P/A ration of 0.17).

b. Sound Transmission loss at duct branches. When one duct branches off from a main, or header, duct the sound power propagating in the main duct up to the branch point is assumed to divide into the branch ducts in accordance with the ratio of the cross sectional area of each branch, to the total cross-sectional area of all the ducts leaving the branch point. Thus, following any branch point the energy transmitted into any one duct is less than the initial sound power in the main duct before the branch point, and this loss, in dB, for each branch duct is given as:

Table 7-2. Approximate Natural Attenuation in Unlined Sheet-Metal Ducts.

P/A ratio in/sq.in	Octave Band Center Frequency (Hz) 63	125	250 and over
Over 0.31	0	0.3	0.1
0.31 to 0.13	0.3	0.1	0.1
Under 0.13	0.1	0.1	0.1

Note Double these values for sheetmetal duct with external gtassfiber insulation.

Duct Branch Division Loss in dB = 10 log(B/T) (eq 7-2)

Where

B = the cross sectional area of the branch.

T = the total area of all ducts after branch including the branch in question.

Table 7-4 Lists the energy loss in dB for a range of branch area ratios. This power division is applied equally to each octave band.

c. End reflection. When a duct, in which sound is propagating, opens abruptly into a large space, or room, sound reflection occurs at the end or opening of the duct. The reflected sound is transmitted back into the duct and is attenuated. The loss in dB associated with this reflection is significant at low frequencies, and is given in table 7-5 for a range of duct diameters. These values apply to a duct outlet flush mounted in a structure, but may also be applied, conservatively, to duct outlets flush mounted in a suspended acoustical ceiling. These data should not be applied when the duct branch dropping from a header duct to a diffuser or grill is less than 3 to 5 duct diameters, or where flexible ducts are used to connect a diffuser to a main branch. When the duct distribution system connects to a strip or linear diffuser, the end reflection should be taken as one-half the loss in dB given in table 7-5 for the diameter of the duct serving the linear diffuser section.

d. Losses at elbows. Sound is reflected or attenuated at 90 degree elbows occurring in duct systems. Table 7-6 lists representative losses in dB for unlined rectangular elbows with turning vanes, or circular elbows for any size, and for a range of sizes for elbows with one inch thick lining in the elbow and associated upstream and downstream ductwork.

e. Sound attenuators (prepackaged mufflers). Sound attenuators, sometimes termed duct silencers, or mufflers are manufactured specifically for ventilation, and air conditioning systems by a number of manufacturers. These are used in air distribution systems as a means of providing increased sound attenuation where normal duct attenuation is insufficient. Mufflers are available in modular form to fit a range of cross-sections for rectangular ducts, and are usually readily available in lengths of 3, 5, 7, and 10 ft. They are also available for circular ducts in a range of diameters, and the length is a function of diameter, being 2 to 3 times the diameter. For the various lengths, and for both rectangular and circular ducts the attenuators are available with low, medium, or high pressure drop for a given velocity, usually expressed in terms of the air velocity in the duct at the attenuator entrance (i.e. "face velocity"). For example, low pressure drop mufflers will have a pressure drop of less than 0.1 in. of water with a face velocity of 1000 ft/min, but high pressure drop units will have a drop of close to 0.5 inch of water at the same velocity. Mufflers with a higher pressure drop will most often provide greater sound attenuation. The actual installed pressure drop will also be a function of both the unit location in an air distribution system, and the uniformity and turbulence of the entering air flow. Manufacturers provide guidelines for estimating the installed operating pressure drop for different conditions. The manufacturers of duct attenuators also publish information on the sound power generated by flow in the air passages of the attenuator. However, this flow noise, or self noise, is seldom a problem unless the flow velocities in the duct are high (e.g. greater than 3,000 FPM), or the sound level criteria for the space served calls for very low levels, such as for a concert hall. Typical dynamic sound insertion loss values for normal rectangular sound attenuators, with glass fiber packed linings, for both low and high pressure drop mufflers are tabulated in table 7-7. These values are applicable when the flow and the sound are in the same direction and the flow velocity is

Table 7-3. Attenuation in Lined Ducts.

Internal Cross-Sectional Dimensions (inches)	Perimeter / Area Ratio (in/in^2)	Octave Band Center Frequency (Hz) 63	125	250	500	1000	2000	4000
4 X 4	1.00	0.16	0.44	1.21	3.32	9.10	10.08	3.50
4 X 6	0.83	0.13	0.37	1.01	2.77	7.58	8.28	3.13
4 X 8	0.75	0.12	0.33	0.91	2.49	6.82	6.45	2.57
4 X 10	0.70	0.11	0.31	0.85	2.32	6.37	5.02	2.07
6 X 6	0.67	0.12	0.34	0.93	2.56	7.01	7.50	3.17
6 X 10	0.53	0.10	0.27	0.75	2.04	5.61	5.67	2.67
6 X 12	0.50	0.09	0.26	0.70	1.92	5.26	4.80	2.33
6 X 18	0.44	0.08	0.23	0.62	1.70	4.67	2.95	1.51
8 X 8	0.50	0.10	0.28	0.77	2.12	5.82	6.08	2.94
8 X 12	0.42	0.09	0.24	0.65	1.77	4.85	4.98	2.64
8 X 16	0.38	0.08	0.21	0.58	1.59	4.37	3.89	2.17
8 X 24	0.33	0.07	0.19	0.52	1.42	3.88	2.39	1.41
10 X 10	0.40	0.09	0.24	0.67	1.84	5.04	5.17	2.79
10 X 16	0.33	0.07	0.20	0.55	1.49	4.10	4.04	2.41
10 X 20	0.30	0.07	0.18	0.50	1.38	3.78	3.30	2.05
10 X 30	0.27	0.06	0.16	0.45	1.23	3.36	2.03	1.34
12 X 12	0.33	0.08	0.22	0.60	1.64	4.48	4.52	2.67
12 X 18	0.28	0.07	0.18	0.50	1.36	3.74	3.71	2.39
12 X 24	0.25	0.06	0.16	0.45	1.23	3.36	2.89	1.97
12 X 36	0.22	0.05	0.15	0.40	1.09	2.99	1.78	1.28
15 X 15	0.27	0.07	0.19	0.52	1.42	3.88	3.84	2.53
15 X 22	0.22	0.06	0.16	0.43	1.19	3.27	3.20	2.29
15 X 30	0.20	0.05	0.14	0.39	1.06	2.91	2.46	1.86
15 X 45	0.18	0.05	0.13	0.34	0.94	2.17	1.51	1.21
18 X 18	0.22	0.06	0.17	0.46	1.26	3.45	3.37	2.42
18 X 28	0.18	0.05	0.14	0.38	1.03	2.84	2.69	2.13
18 X 36	0.17	0.05	0.13	0.34	0.94	2.59	2.15	1.78
18 X 54	0.15	0.04	0.11	0.31	0.84	1.65	1.32	1.16
24 X 24	0.17	0.05	0.14	0.38	1.05	2.87	2.73	2.26
24 X 36	0.14	0.04	0.12	0.32	0.87	2.39	2.24	2.02
24 X 48	0.13	0.04	0.10	0.29	0.78	1.90	1.75	1.66
24 X 72	0.11	0.03	0.09	0.25	0.70	1.06	1.07	1.08
30 X 30	0.13	0.04	0.12	0.33	0.91	2.49	2.32	2.14
30 X 45	0.11	0.04	0.10	0.28	0.76	1.88	1.90	1.91
30 X 60	0.10	0.03	0.09	0.25	0.68	1.35	1.48	1.57
30 X 90	0.09	0.03	0.08	0.22	0.60	0.76	0.91	1.02
36 X 36	0.11	0.04	0.11	0.29	0.81	2.01	2.03	2.04
36 X 54	0.09	0.03	0.09	0.25	0.67	1.42	1.66	1.83
36 X 72	0.08	0.03	0.08	0.22	0.60	1.02	1.30	1.50
36 X 108	0.07	0.03	0.07	0.20	0.54	0.57	0.80	0.98
42 X 42	0.10	0.04	0.10	0.27	0.73	1.59	1.81	1.97
42 X 64	0.08	0.03	0.08	0.22	0.60	1.11	1.47	1.75
42 X 84	0.07	0.03	0.07	0.20	0.55	0.84	1.16	1.45
42 X 126	0.06	0.02	0.06	0.18	0.49	0.45	0.71	0.94
48 X 48	0.08	0.03	0.09	0.24	0.67	1.30	1.65	1.90
48 X 72	0.07	0.03	0.07	0.20	0.56	0.92	1.35	1.70
48 X 96	0.06	0.02	0.07	0.18	0.50	0.66	1.05	1.40
48 X 144	0.06	0.02	0.06	0.16	0.45	0.37	0.65	0.91

Notes

a. Based on measurements of surface-coated duct liners of 1.5 lb/cu ft density representative for all liners with density of 1.5 to 3.0 lb/cu ft.

b. dark line represents division between high and low frequency high frequency attenuation are applicable to a maximum of 10-ft.

c. attenuations apply for airflow less than 2,000 fpm.

d. for attenuation due to sheet metal only see Table 12 - 5

e. for critical applications reduce attenuations by 10% to account for differences between manufacturers.

moderate (approximately 1,000 FPM). Manufactures provide dynamic sound insertion losses for various flow velocities, when the air flow and sound are in the same direction (supply) and when the air flow and sound are in opposite directions (return).

The manufacturers of these attenuators can also provide polymer sheeting to enclose the sound absorptive glass fiber packing for cleanliness and resistance to certain chemicals. Certain manufactures also make attenuators without any sound absorptive packing (i.e. "packless") for systems serving spaces that must maintain very clean environments. The insertion losses for these units are typically somewhat less than for the normal mufflers, and the manufacturers should be consulted regarding their specific acoustic performance.

f. Attenuators using active cancellation. Active sound attenuation as a means of noise control has in recent years moved from the laboratory to a growing number of applications including the control of fan noise in ducted systems. Active sound attenuation involves the use of an auxiliary sound source to generate a sound wave that interferes and cancels an unwanted sound wave. This system of cancellation is limited to plane wave conditions, which means that the wavelength of the sound to be cancelled must generally be greater than the largest dimension of the duct. While this is not a problem for most air distribution systems, it does generally limit the frequency range for application to below about 500 Hz. Recently, with the development of adaptive, digital signal processing, the application of this method has been extended to cancelling broad band noise and thus is not now limited to cancelling only tonal sounds. Finally, in some applications it has been proposed to combine in one muffler both active cancellation and passive dissipative elements to attenuate the low and high frequencies respectively. Thus, active cancellation may find application in the future in the HVAC industry, but its cost and operation will probably limit its application to situations where the space for the use of conventional dissipative lining or mufflers is not available.

7-5. Procedure For Calculating Noise Control Requirements For An Air Distribution System.

a. The procedure for calculating the noise control requirements for an air distribution system involves six steps:

(1) Selection of noise criteria or goal for the space(s) served.

(2) Estimating sound power level of sources.

(3) Estimating the insertion loss of the duct distribution system applicable to each source to arrive at the sound power at the air outlet(s) in the space(s) served.

(4) Determine the total sound power within the room from all the sources.

(5) Determining the "Rel SPL" for the space served and subtracting that from the sound power levels, from previous step, to obtain the sound pressure levels in the space.

(6) Compare calculated sound pressure levels in each octave band with the criteria to determine noise control requirements in dB.

b. To carry out step (1) it is necessary to know the function of the space served, and for that function such as a conference room select the appropriate RC or NC criteria, to serve as the noise control. To carry out step (2) for a constant volume system essentially means determining the sound power level, in each octave band, for the fan, and for a diffuser, or grille. These data can

Table 7-4. Power Level Loss at Branches.

B/T	Division (dB)	B/T	Division (dB)
1.00	0	0.10	10
0.00	1	0.08	11
0.63	2	0.063	12
0.50	3	0.05	13
0.40	4	0.04	14
0.32	5	0.032	15
0.25	6	0.025	16
0.20	7	0.02	17
0.16	8	0.016	18
0.12	9	0.012	19

Table 7-5. End Reflection Loss.

A. Terminated at Acoustic Tile Ceiling or in Free Space.

Circular Duct Mean Duct Width (Inches)	Octave-Band Center Frequency (Hz) 63	125	250	500	1K
6	20	14	9	5	2
8	18	12	7	3	1
10	16	10	6	2	1
12	14	9	5	2	1
16	12	7	3	1	0
20	10	6	2	1	0
24	9	5	2	1	0
28	8	4	1	0	0
32	7	3	1	0	0
36	6	3	1	0	0
48	5	2	1	0	0
72	3	1	0	0	0

B. Terminated Flush with Hard Ceiling, Wall, or Floor.

Circular Duct Mean Duct Width (inches)	Octave Band Center Frequency (Hz) 63	125	250	500	1K
6	18	13	8	4	1
8	16	10	6	2	1
10	14	9	3	2	1
12	13	8	4	1	0
16	10	6	2	1	0
20	9	5	2	1	0
24	8	4	1	0	0
28	7	3	1	0	0
32	6	2	1	0	0
36	5	2	1	0	0
48	4	1	0	0	0
72	2	1	0	0	0

normally be obtained from a manufacturer, but if the equipment is not selected the fan power levels can be determined from the method given in appendix C. The diffuser or grille sound power levels can be determined approximately from a manufacturer's catalog for an identical or similar type of outlet. Similarly, with a variable volume system the sound power level for the air discharge of an air terminal unit, such as a VAV, or FPT, can be obtained from a manufacturer's catalog for a given operating condition. For step (3) the attenuation provided by unlined and lined ducts, by sound attenuators, elbows, branches, and end reflection are added together to find the total insertion loss (IL) applicable to the control of the fan sound power as it propagates along the duct path between the fan and the air outlet. Similarly, for the prediction of the noise level in the space served caused by duct transmitted air discharge noise from an air terminal unit it is necessary to determine the insertion loss of the duct distribution system between the terminal unit and the room air outlet. This IL will consist of the attenuation of any unlined or lined ductwork, elbows, duct branches, or splits, and end reflection although this latter will not be significant for air terminal unit noise. In step (4) the sound power level of all sources contributing to the sound power at the air outlet are determined and combined to find the total sound power level, in octave bands, at the air outlet. For step (5) it is necessary to determine the Room Factors and the "Rel SPLs" (see Chapter 3) for the space served and apply the "Rel SPL" to the sound power levels at the air outlet for each source to obtain the sound pressure level produced by that outlet at any location in the space served. For step (6) the resulting sound pressure levels are compared to the selected criteria to determine if additional sound attenuation is necessary.

7-6. Calculation Example.

In this example the noise control requirements for an air distribution system serving a classroom as shown in figure 7-2 are calculated. A fan with forward curved blades delivers 20,000 cubic feet per minute (cfm) to a number of classrooms and offices against a static pressure of 2.5 in. of water with 12 brake horse power. The main supply duct has dimensions of 60 x 24 inches resulting in an air velocity of 2000 ft/min. The closest class room, which has dimensions of 24 x 24 x 10 ft, is supplied by a duct branching off from the main header duct. The classroom air is delivered from four diffusers, 10 inch in diameter each, mounted in the ceiling, each delivering 500 cfm. Thus the total air supplied by the branch duct is 2000 cfm, with an air velocity of 1000 ft/min. in the 12 x 24 in. duct. The only acoustical material applied to the room surfaces is a suspended acoustical ceiling representing approximately 25% of the room surfaces. In this example it is assumed that the entire duct system is internally lined with one inch thick sound absorptive insulation, and the duct cross-sectional flow area is given by the dimensions stated in the schematic figure.

The tabulated results for this example are as follows:

a. Step (1). In this step an NC 30 is selected as the sound pressure level design criteria.

b. Step (2). In this step the sound power level (Lw), in dB re 10-12 watts, of the supply fan and the diffusers are determined.

(1) Fan Lw. From equation 10-5 and table 10-13.

Octave Band Center Frequencies

	63	*125*	*250*	*500*	*1k*	*2k*	*4k*
Fan Kw	47	43	39	36	34	32	28
10log(cfm)	43	43	43	43	43	43	43
BFI.				2			
20log(p)	8	8	8	8	8	8	8
Eff. Corr.	6	6	6	6	6	6	6
Total Lw of Fan	104	100	96	95	91	89	85

(2) Diffuser Lw, w/o damper. From suppliers catalog.

Table 7-6. Losses Caused by Duct Elbows.

	Duct Diameter (inches)	Octave Band Frequency (Hz) 63	125	250	500	1000	2000	4000	8000
Lined elbows	5 to 10	0	0	1	2	3	4	6	8
	11 to 20	0	1	2	3	4	6	8	10
	21 to 40	1	2	3	4	5	6	8	10
	41 to 80	2	3	4	5	6	8	10	12
Unlined elbows	All sizes	1	2	3	3	3	3	3	3

Table 7-7. Representative IL Values for Sound Attenuators.

Type	Length in Ft.	Octave Band Center Frequency (Hz) 63	125	250	500	1000	2000	4000	8000
Low	3	2	4	8	14	21	22	14	11
Pressure	5	3	5	11	23	31	34	19	13
Drop	7	5	9	16	32	41	43	24	16
	10	6	15	22	37	52	53	35	23
Standard	3	3	6	13	23	33	33	23	14
Pressure	5	4	11	20	37	44	44	36	22
Drop	7	6	13	28	42	47	47	45	30
	10	8	15	35	50	56	57	57	40

Octave Band Center Frequencies

	63	125	250	500	1k	2k	4k
Lw of One Diffuser	N/A	43	37	35	40	40	23

c. Step (3). In this step the total attenuation for fan noise provided by the duct system including the lined ductwork, the duct branches, the elbows, and the end reflection loss are determined. This consists of determining the insertion loss (IL) for each element and then summing all of the insertion losses.

(1) *Lined Ductwork IL in dB.* The insertion losses from each rectangular duct element is determined from tables 7-2 and 13-3. The results of each element is summed by octave bands to provide the total duct attenuation in dB in each octave band.

Octave Band Center Frequencies

	63	125	250	500	lk	2k	4k
20' of 24x60	3	4	7	18	32	30	30
9' of 12x24	3	2	5	12	31	27	19
10' of 12x16	4	3	7	16	41	41	28
3' of 10"	0	1	2	5	6	6	5
Total	10	10	21	>50	>50	>50	>50

It should be noted that table 7-3 does not contain entries for the 24x60 and 12x16 ducts. The attenuation values for these ducts are obtained by interpolation. For example the attenuation for the 24x60 duct is the average value of the 24x48 and 24x72 ducts. For the 24x60 duct the full 20 feet of length is used since the elbow breaks the length into two lengths less than 10 feet each. Also it should be noted that the total attenuation is the sum of the attenuation due to the internal lining (table 7-3) and the natural attenuation (table 7-2). The attenuation for the 10" round duct was obtained from a suppliers catalog. The total attenuation for all of the duct elements is limited to approximately 50 dB because this is usually the maximum that can be obtained in a connected system due to structural flanking down the duct wall.

(2) *Branches (To one diffuser).* The branch attenuation is determined by equation 7-2 or table 7-4. With a branch area of 2 sq. ft. (i.e. 24x24) and the area after the branch of 10 sq. ft. (i.e. 24x60) the area ratio of the branch is 2/(10+2) or 0.167. The sound power loss at for the take-off in the corridor is approximately 8 dB in accordance with equation 7-2. The power division in the "T" and diffuser take-off are determined in a similar fashion and are approximately 3 dB each (i.e. 50% each way). Therefore the total attenuation due to all the branching is approximately 14 dB in all of the octave bands.

Octave Band Center frequencies

	63	125	250	500	1k	2k	4k
Branch att. in corridor	8	8	8	8	8	8	
"T" in room	3	3	3	3	3	3	3
Diffuser Take-off	3	3	3	3	3	3	3
Total (dB)	14	14	14	14	14	14	14

(3) *Four elbows.* There are four elbows between the fan and the classroom. The attenuation of each of these can be found from table 7-6. The first elbow is the 24x60 inch elbow that goes from the vertical to the horizontal at the fan outlet. For this elbow the duct diameter used is 24 inches since this is the dimension in the plane of the

turn. The second elbow is a 60x24, for this elbow the dimension is 60 inches. The third elbow is the "T" from 12x24 to 12x16 over the classroom. In (2) above a power division was taken for this "T" fitting, however since some energy is also reflected from the "T" it also acts like an elbow. For the "T" the characteristic dimension is 24". And the final elbow is the 12x16 over the class room. For this elbow the characteristic dimension is 16". The attenuations for each elbow and the total attenuations for all of the elbows is given below.

Octave Band Center Frequencies

	63	125	250	500	1k	2k	4k
24x60	1	2	3	4	5	6	8
60x24	2	3	4	5	6	8	10
24x12	1	2	3	4	5	6	8
16x12	0	1	2	3	4	6	8
Total IL	4	8	12	16	20	26	34

(4) *End loss.* The end reflection loss is taken from table 7-5 part A, where the diameter is 10 inches. Part A was used since the diffuser was mounted in an acoustical tile ceiling. If the ceiling was hard (gyp. bd., plaster, concrete, etc.) then part B would have been used.

Octave Band Center Frequencies

	63	125	250	500	1k	2k	4k
End Reflection	16	10	6	2	1	0	0

(5) *Total IL.* The total insertion loss of the ducted air supply system is the arithmetical sum, in each octave band, of the insertion losses of (1) through (4) above.

Octave Band Center Frequencies

	63	125	250	500	1k	2k	4k
Total line ducts	10	10	21	>50	>50	>50	>50
Total branches	14	14	14	14	14	14	14
Total elbows	4	8	12	16	20	26	34
End Reflection	16	10	6	2	1	0	0
Total IL (all duct elements)	44	42	53	>50	>50	>50	>50

Note again, the insertion loss is limited to approximately 50 dB. This is because flanking sound traveling within the duct walls can become a significant source of sound when the sound levels within the air stream have been attenuated a great deal. If attenuations greater than 50 dB are required, additional vibration breaks within the duct would have to be evaluated.

d. Step (4). In this step the total sound power at each of the two diffusers closest to the fan is determined. First the sound power transmitted to the room from the fan via the supply duct, is determined by subtracting the total attenuations (c. (5) above) from the total sound power of the fan (b. (1) above) by octave bands. These steps are shown below.

Octave Band Center Frequencies

	63	125	250	500	1k	2k	4k
Total Fan Lw (b.(1) above)	104	100	96	95	91	89	85
Total Duct IL (c.(5) above)	44	42	53	>50	>50	>50	>50
Resulting Fan Lw in Classroom	60	58	43				

Then the sound power of the diffuser is added, logarithmically, to the sound power transmitted by the fan, as shown below.

Octave Band Center Frequencies

	63	125	250	500	1k	2k	4k
Fan Lw in Classroom	60	58	43				
Diffuser Lw		43	37	35	40	40	23
Total	60	58	44	35	40	40	23

This analysis provides the total sound power into the room from the operation of one diffuser. It also indicates the frequency range of the significant sources of sound. For example the 63, 125 and 250 Hz octave bands are dominated by the sound of the fan, whereas the level of the other octave bands are determined by the operation of the ceiling diffuser. This distinction is important since sound control for each of these two items are different, as discussed in 7-6(f) below.

e. Step (5). In this step the Room Factor is determined to obtain the "Rel Spl" as described in Chapter 3. The sound pressure levels in octave bands (Lp) in the room, from one diffuser, is then the total sound power from the diffuser plus the "Rel Spl" as given in equation 3-3. The room volume is 5760 cu. ft., and the acoustic ceiling is 25% of the room surface area. Thin wall surfaces are used on 30% of the room surface area. The term "REL SPL" is determined for a distance of 8 ft. from one diffuser.

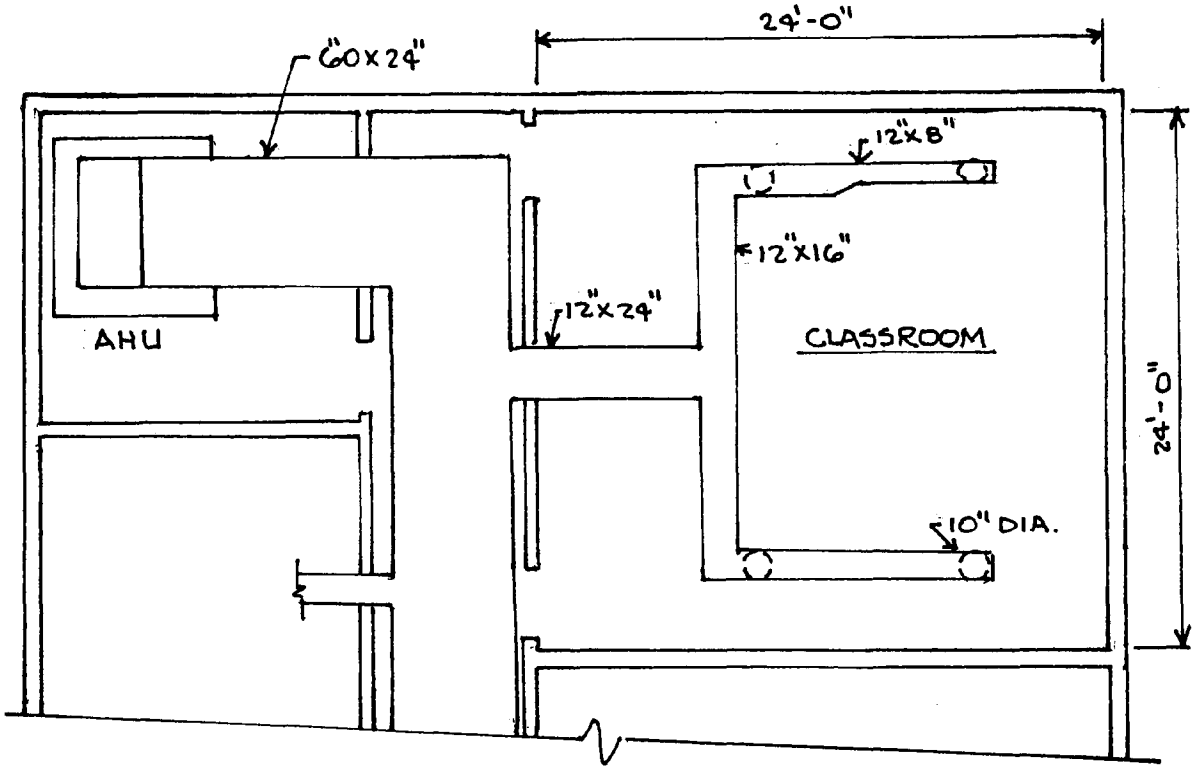

Figure 7-2. Plan View of Supply Duct for Example.

	Octave Band Center Frequencies						
	63	125	250	500	1k	2k	4k
Room Factor (sq/ft.)	450	600	450	500	600	600	600
"Rel SPL"	-9	-11	-9	-10	-11	-11	-11
Total Lw (d. above)	60	58	44	35	40	40	23
Lp-Octave band Sound level	51	47	35	25	29	29	12

f. Step (6). In this step the Lp from e. above is compared with the NC 30 criteria.

	Octave Band Center Frequencies						
	63	125	250	500	1k	2k	4k
Lp (one diffuser)	51	47	35	25	29	29	12
NC 30 criteria	57	48	41	35	31	29	28
Required Reduction	0	0	0	0	0	0	0

This analysis shows that the sound due to the operation of the fan just meets the selected goal in the 125 Hz octave band. In addition the diffuser sound, from one diffuser, would just meet the criteria in the octave band centered at 2000 Hz. However, for this classroom one should also consider the total sound from all four diffusers. As the two diffusers closest to the fan are at identical duct distances from the fan the sound of each diffuser can be assumed to be identical. Also the added duct length to the next two diffusers is not sufficient to lower the fan noise significantly. Therefore the diffuser noise should be equal for all four outlets. Thus, in the center of the room it is found that the required IL must be increased by the factor of 10log(4), or 6 dB. In this case the sound pressure level in the room for all four diffusers would be:

	Octave Band Center Frequencies						
	63	125	250	500	1k	2k	4k
Lp (4 diffusers)	57	53	41	31	35	35	18
NC 30 criteria	57	48	41	35	31	29	28
Required Reduction (Considering Four Outlets)	0	5	0	0	4	6	0

To provide the additional IL required for the fan noise in the 125 Hz octave band a 5 ft. long standard pressure drop muffler could be installed in the 60x24 duct in the fan room, or in the 12x24 duct leading to the classroom. The location of choice would depend on the need for sound attenuation in other portions of the duct system. The sound in the 1,000 and 2,000 Hz octave bands are due to the diffusers. Mufflers in the duct will not attenuate this sound. For the diffuser noise one solution would be to increase the diffuser size, and this would require changing the diameter of the diffuser drop from a 10 in. to 12 in. diameter yielding lower sound power levels by the order of 8 to 10 dB.

CHAPTER 8

VIBRATION CONTROL

8-1. Introduction.

This chapter provides the details of vibration isolation mountings so that the desired vibration conditions discussed in chapter 2 can be met for most electrical and mechanical equipment. In addition typical forms of vibration isolators are given, five general types of mounting systems are described, and summary tables offer suggested applications of five mounting systems for the mechanical equipment commonly found in buildings. A discussion of the general consideration for effective vibration isolation is presented in appendix B.

8-2. Vibration Isolation Elements.

Table 8-2 lists the principal types of vibration isolators and their general range of applications. This table may be used as a general guide for comparing isolators and their range of static deflections and natural frequencies as applied to two equipment categories (rotary and reciprocating) and two equipment locations (noncritical and critical). Additional details are required for actual selections of mounts. Vibration isolator types are discussed in this paragraph, and equipment installations are discussed in the remaining paragraphs of this chapter.

a. Steel spring isolators. Steel springs are used to support heavy equipment and to provide isolation for the typical low-frequency range of about 3 to 60 Hz (180- to 3600-rpm shaft speed). Steel springs have natural frequencies that fall in the range of about 1 Hz (for approximately lo-inch static deflection to about 6 Hz (for approximately 1/4-inch static deflection). Springs transmit high-frequency structureborne noise, so they should be supplemented with a high-frequency pad-type isolator when used to support equipment directly over critical locations in a building. Unhoused "stable" steel springs are preferred over housed unstable or stable springs. Unstable springs tend to tilt over when they are loaded and to become short-circuited when they bind against the inside walls of the spring housing. Stable steel springs have a diameter that is about 0.8 to 1.2 times their compressed height. They have a horizontal stiffness that is approximately equal to their vertical stiffness; therefore, they do not have a tendency to tilt sideways when a vertical load is applied. The free-standing unhoused spring can easily be inspected to determine if the spring is compressed correctly, is not overloaded to the point that adjacent coils are solid against one another, and is not binding against its mounting bracket, and to ensure that all springs of a total installation are uniformly compressed and that the equipment is not tilting on its base. For reasons of safety, steel springs are always used in compression, not in tension.

b. Neoprenein-shear isolators. Neoprene is a long-lasting material which, when properly shaped, can provide good vibration isolation for the conditions shown in table 8-1. Typically, neoprene-in-shear mounts have the appearance of a truncated cone of neoprene bonded to bottom and top metal plates for bolting to the floor and to the supported equipment. The mount usually has an interior hollow space that is conically shaped. The total effect of the shaping is that for almost any direction of applied load, there is a shearing action on the cross section of neoprene. In this shearing configuration, neoprene serves as a vibration isolator; hence, the term "neoprene-in-shear." A solid block of neoprene in compression is not as effective as an isolator. Manufacturers' catalogs will show the upper limit of load-handling capability of large neoprene-in-shear mounts. Two neoprene-in-shear mounts are sometimes constructed in series in the same supporting bracket to provide additional static deflection. This gives the double deflection mount referred to in table 8-1.

c. Compressed glass fiber. Blocks of compressed glass fiber serve as vibration isolators when properly loaded. The manufacturers have several different densities available for a range of loading conditions. Typically, a block is about 2-inches thick and has an area of about 10 to 20 in.2. but other dimensions are available. These blocks are frequently used in series with steel springs to remove high-frequency structureborne noise, and they are often used alone, at various spacings, to support floating concrete floor slabs (fig 6-6). The manufacturer's data should be used to determine the density and area of a block required to achieve the desired static deflection. Unless otherwise indicated, a static deflection of about 5 to 10 percent of the uncompressed height is normal. With long-time use, the material might compress an additional 5 to 10 percent of its height. This gradual change in height must be kept in mind during the designing of floating floors to meet floor lines of structural slabs.

Table 8-1. General Types and Applications of Vibration Isolators.

Isolator Type	Typical Range of Static Deflection (in.)	Corresponding Approximate Range of Natural Frequency (Hz)	Vibration Isolation Applications -- Non-specific			
			Noncritical Locations[c]		Critical Locations[c]	
			Rotary Equipment	Reciprocating Equipment	Rotary Equipment	Reciprocating Equipment
Steel spring[a]	.25 to 10	6 to 1	Yes	Yes	Yes	Special[d]
Neoprene-in-shear, double deflection	.25 to .5	6 to 4	Yes	Yes	Yes	No[e]
Neoprene-in-shear, single deflection	.1 to .25	10 to 6	Yes	Yes	Yes	No[e]
Compressed block of glass fiber, 2-in. thick[b]	.02 to .15	20 to 8	Yes	No	Yes	No
Neoprene pad, ribbed or waffle-pattern, 1 to 4 layers[b]	.02 to .25	20 to 6	Yes	No	Yes	No
Felt or cork pads or strips	.01 to .1	30 to 10	See text for applications and limitations			
Air Spring	---	10 to 1	See text for applications and limitations			

[a]Always use pad-type isolator in series with spring to control high-frequency structureborne noise in critical locations.

[b]May be used alone for relatively high-speed rotary equipment or in series with steel springs in critical locations for reduction of high-frequency structureborne noise. Not normally used alone for vibration isolation of reciprocating equipment.

[c]Refer to paragraph 4-2d for definition of noncritical and critical locations.

[d]Special design required for reciprocating equipment at critical locations, especially for low speeds.

[e]Not normally recommended for this application, but can be adapted as special design.

d. Ribbed neoprene pads. Neoprene pads with ribbed or waffle-pattern surfaces are effective as high frequency isolators in series with steel springs. In stacks of 2 to 4 thicknesses, they are also used for vibration isolation of flow power rotary equipment. The pads are usually about 1/4 to 3/8 inches thick, and they compress by about 20 percent of their height when loaded at about 30 to 50 lb/in2. Higher durometer pads may be loaded up to about 100 lb/in2. The pads are effective as isolators because the ribs provide some shearing action, and the spaces between the ribs allow lateral expansion as an axial load is applied. The manufacturer's literature should be used for proper selection of the material (load-deflection curves, durometer, surface area, height, etc.).

e. Felt pads. Felt strips or pads are effective for reducing structureborne sound transmission in the mounting of piping and vibrating conduit. One or more layers of 1/8 or 1/4 inch thick strips should be wrapped around the pipe under the pipe clamps that attach the piping to building structures. Felt pads will compress under long time and high load application and should not be used alone to vibration isolate heavy equipment.

f. Cork pads. Cork pads, strips, or blocks may be used to isolate high frequency structureborne noise, but they are not recommended for high load bearing applications because cork gradually compresses under load and loses its resilience. High density construction cork is sometimes used to support one wall of a double wall. In this application, the cork will compress slightly with time, and it will continue to serve as a high frequency isolator (say, for structureborne noise above about 100 to 200 Hz), but it will not provide good low frequency isolation at equipment driving frequencies of about 10 to 60 Hz. Years ago, before other resilient materials came into widespread use, cork was often misused under heavy vibrating equipment mounts: full area cork pads were frequently loaded at rates of 1 to 5 lb/in2. This is such a low loading rate that the cork appears stiff and does not provide the desired resilience. If cork is to be used for vibration isolation, a load deflection curve should be obtained from the supplier, and the cork should be used in the central linear region of the curve (possibly loaded at about 10 to 20 lb/in2). With this loading, the compressed material will have an initial deflection of about 5% and will continue to compress gradually with age.

g. Air springs. Air springs are the only practical vibration isolators for very low frequencies, down to about 1 Hz or even lower for special problems. An air mount consists of pressurized air enclosed in a resilient reinforced neoprene chamber. The air is pumped up to the necessary pressure to carry its load. Since the chamber is subject to very slow leakage, a system of air mounts usually includes a pressure sensing monitor and an air supply (either a pump or a pressurized air tank). A group of air mounts can be arranged to maintain very precise leveling of a base by automatic adjustment of the pressure in the various mounts. If air mounts are used in a design, an active air supply is required. Operational data should be obtained from the manufacturer,

8-3. Mounting Assembly Types.

In this paragraph, five basic mounting systems are described for the vibration isolation of equipment. These mounting systems are applied to specific types of equipment in paragraph 8-6. Certain general conditions relating to all the systems are first mentioned.

a. General conditions.

(1) *Building uses.* Isolation recommendations are given for three general equipment locations: on grade slabs, on upper floors above noncritical areas, and on upper floors above critical areas. It is assumed that the building under consideration is an occupied building involving many spaces that would require or deserve the low noise and vibration environments of such buildings as hotels, hospitals, office buildings, and the like, as characterized by categories 1 through 4 of table 2-1. Hence, the recommendations are aimed at providing low vibration levels throughout the building. If a building is intended to serve entirely such uses as those of categories 5 and 6 of table 2-1, the recommendations given here are too severe and can be simplified at the user's discretion. An on-grade slab usually represents a more rigid base than is provided by a framed upper floor, so the vibration isolation recommendations can be relaxed for on-grade installations. Of course, vibration isolation treatments must be the very best when a high-quality occupied area is located immediately under the MER, as compared with the case where a "buffer zone" or noncritical area is located between the MER and the critical area.

(2) *Structural ties, rigid connections.* Each piece of isolated equipment must be free of any structural ties or rigid connections that can short-circuit the isolation joint.

(a) Electrical conduit should be long and "floppy" so that it does not offer any resistance or constraint to the free movement of the equipment. Piping should be resiliently supported. Limit stops, shipping bolts, and leveling bolts on spring isolators should be set and inspected to ensure that

they are not inadvertently short-circuiting the spring mounts.

(b) All building trash should be removed from under the isolated base of the equipment. Loose pieces of grout, 2x4s, nuts, bolts, soft drink bottles, beer cans, welding rods, pipes, and pipe couplings left under an equipment base can short-circuit the isolation mounts. It is recommended that a 2 inch to 4 inch clearances be provided under all isolated equipment in order to facilitate inspection and removal of trash from under the base.

(c) For many equipment installations, there is no need to bolt down the isolation mounts to the floor because the smooth operation of the machine and the weight of the complete assembly keep the system from moving. For some systems, however, it may be necessary to restrain the equipment from "creeping" across the floor. In these situations, it is imperative that the hold-down bolts not short circuit the pads. A suggested restraining arrangement is illustrated in figure 8-1. Simpler versions can be devised.

(d) For buildings located in earthquake-prone areas, the isolation mounts should contain snubbers or motion-limiting devices that restrain the equipment against unusual amounts of movement. These snubbers should be set to provide adequate free movement for normal equipment operation. These devices are available from most suppliers of isolator equipment.

b. Type I mounting assembly. The specified equipment should be mounted rigidly on a large integral concrete inertia block. (Unless specified otherwise, all concrete referred to in this manual should have a density of at least 140 to 150 lb/ft.^{3}.)

(1) The length and the width of the inertia block should be at least 30 percent greater than the length and width of the supported equipment.

(2) Mounting brackets for stable steel springs should be located off the sides of the inertia block at or near the height of the vertical center-of-gravity of the combined completely assembled equipment and concrete block. If necessary, curbs or pedestals should be used under the base of the steel springs in order to bring the top of the loaded springs up to the center-of-gravity position. As an alternative, the lower portion of the concrete inertia block can be lowered into a pit or cavity in the floor so that the steel springs will not have to be mounted on curbs or pedestals. In any event, the clearance between the floor (or all the surfaces of the pit) and the concrete inertia block shall be at least 4 inches, and provision should be allowed to check this clearance at all points under the block.

(3) Floor slab thickness. It is assumed that MER upper floor slabs will be constructed of dense concrete of 140-150 lb/ft.^{3} density, or, if lighter concrete is used, the thickness will be increased to provide the equivalent total mass of the specified floor. For large MERs containing arrays of large and heavy equipment, it is assumed that the floor slab thickness will be in the range of 8 to 12 inches, with the greater thicknesses required by the greater floor loads. For smaller MERs containing smaller collections of lighter weight but typi-

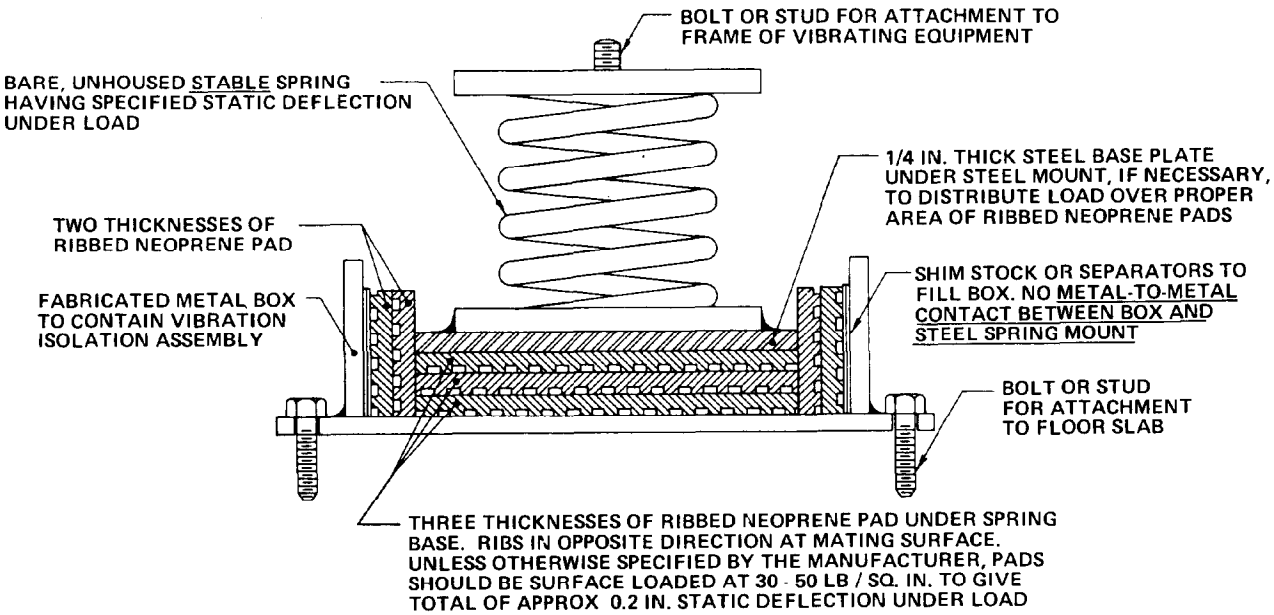

Figure 8-1. Suggested Arrangement of Ribbed Neoprene Pads for Providing Resilient Lateral Restraint to a Spring Mount.

cal equipment, floor slab thicknesses of 6 to 10 inches are assumed. For occasional locations of one or a very few pieces of small high-speed equipment (say 1800 rpm or higher) having no reciprocating action, floor slabs of 4 to 6 inches may be used with reasonable expectation of satisfactory results. However, for reciprocating-action machines operating at the lower speeds (say, under 1200 rpm), any floor slab thicknesses reduced from those listed above begin to invite problems. There is no clear crossover from "acceptable" to "unacceptable" in terms of floor slab thickness, but each reduction in thickness increases the probability of later difficulties due to vibration. The thicknesses mentioned here are based on experience with the "acoustics" of equipment installations. These statements on thicknesses are in no way intended to represent structural specifications for a building. "Housekeeping pads" under the equipment are assumed, but the height of these pads is not to be used in calculating the thickness of the floor slab.

(4) The ratio of the weight of the concrete block to the total weight of all the supported equipment (including the weight of any attached filled piping up to the point of the first pipe hanger) shall be in accordance with the recommendations given in the paragraph and table for the particular equipment requiring this mounting assembly. The inertia block adds stability to the system and reduces motion of the system in the vicinity of the driving frequency. For reciprocating machines or for units involving large starting torques, the inertia block provides much-needed stability.

(5) The static deflection of the free-standing stable steel springs shall be in accordance with the recommendations given in the paragraph and table for the particular equipment. There shall be adequate clearance all around the springs to assure no contact between any spring and any part of the mounted assembly for any possible alignment or position of the installed inertia block.

c. Type II mounting assembly. This mount is the same as the Type I mount in all respects except that the mounting brackets and the top of the steel springs shall be located as high as practical on the concrete inertia block but not necessarily as high as the vertical center-of-gravity position of the assembly, and the clearance between the floor and the concrete block shall be at least 2 inches.

(1) If necessary, the steel springs can be recessed into pockets in the concrete block, but clearances around the springs should be large enough to assure no contact between any spring and any part of the mounted assembly for any possible alignment or position of the installed inertia block. Provision must be made to allow positive visual inspection of the spring clearance in its recessed mounting.

(2) When this type of mounting is used for a pump, the concrete inertia block can be given a T-shape plan, and the pipes to and from the pump can be supported rigidly with the pump onto the wings of the T. In this way, the pipe elbows will not be placed under undue stress.

(3) The weight of the inertia block and the static deflection of the mounts shall be in accordance with the recommendations given in the table for the particular equipment.

d. Type III mounting assembly. The equipment or the assembly of equipment should be mounted on a steel frame that is stiff enough to allow the entire assembly to be supported on flexible point supports without fear of distortion of the frame or misalignment of the equipment. The frame should then be mounted on resilient mounts-steel springs or neoprene-in-shear mounts or isolation pads, as the static deflection would require. If the equipment frame itself already has adequate stiffness, no additional framing is required, and the isolation mounts may be applied directly to the base of the equipment.

(1) The vibration-isolation assembly should have enough clearance under and all around the equipment to prohibit contact with any structural part of the building during operation.

(2) If the equipment has large starting and stopping torques and the isolation mounts have large static deflections, consideration should be given to providing limit stops on the mounts. Limit stops might also be desired for large deflection isolators if the filled and unfilled weights of the equipment are very different.

e. Type IV mounting assembly. The equipment should be mounted on an array of "pad mounts". The pads may be of compressed glass fiber or of multiple layers of ribbed neoprene or waffle-pattern neoprene of sufficient height and of proper stiffness to support the load while meeting the static deflection recommended in the applicable accompanying tables. Cork, cork-neoprene, or felt pad materials may be used if their stiffness characteristics are known and if they can be replaced periodically whenever they have become so compacted that they no longer provide adequate isolation.

(1) The floor should be grouted or shimmed to assure a level base for the equipment and therefore a predictable uniform loading on the isolation pads.

(2) The pads should be loaded in accordance with the loading rates recommended by the pad

manufacturer for the particular densities or durometers involved. In general, most of these pads are intended for load rates of 30 to 60 psi, and if they are underloaded (for example, at less than about 10 psi), they will not. be performing at their maximum effectiveness.

f. Type V mounting assembly (for propeller-type cooling towers). Large, low-speed propeller-type cooling towers located on roof decks of large buildings may produce serious vibration in their buildings if adequate vibration isolation is not provided. In extreme cases, the vibration may be evident two or three floors below the cooling towers.

(1) It is recommended that the motor, drive shaft, gear reducer, and propeller be mounted as rigidly as possible on a "unitized" structural support and that this entire assembly be isolated from the remainder of the tower with stable steel springs in accordance with table 8-8. Adequate clearance between the propeller tips and the cooling tower shroud should be provided to allow for starting and stopping vibrations of the propeller assembly. Several of the cooling tower manufacturers provide isolated assemblies as described here. This type of mounting arrangement is shown schematically in figure 8-2.

(2) In addition, where the cooling tower is located on a roof deck directly over an acoustically critical area, the structureborne waterfall noise may be objectionable; it can be reduced by locating three layers of ribbed or waffle-pattern neoprene between the base of the cooling tower and the supporting structure of the building. This treatment is usually not necessary if there is a noncritical area immediately under the cooling tower.

(3) A single-treatment alternate to the combined two treatments of (1) and (2) above is the isolation of the entire cooling tower assembly on stable steel springs, also in accordance with table 8-8. The springs should be in series with at least two layers of ribbed or waffle-pattern neoprene if there is an acoustically critical area immediately below the cooling tower (or within about 25 feet horizontally on the floor immediately under the tower). It is necessary to provide limit stops on these springs to limit movement of the tower when it is emptied and to provide limited movement under wind load.

(4) Pad materials, when used, should not be short-circuited by bolts or rigid connections. A schematic of an acceptable clamping arrangement for pad mounts is shown in figure 8-3. Cooling tower piping should be vibration-isolated in accordance with suggestions given for piping.

8-4. Tables Of Recommended Vibration Isolation Details.

a. Table format. A common format is used for all the tables that summarize the recommended vibration isolation details for the various types of equipment. A brief description of the format is given here.

(1) *Equipment conditions.* The three columns on the left of the table define the equipment conditions covered by the recommendations: location, rating, and speed of the equipment. The rating is given by a power range for some equipment, cooling capacity for some, and heating capacity for some. The rating and speed ranges generally cover the range of equipment that might be encountered in a typical building. Subdivisions in rating and speed are made to accommodate variations in the isolation. If vibrating equipment is supported or hung from an overhead floor slab, immediately beneath an acoustically critical area, the same degree of vibration isolation should be provided as is recommended for the location designated as "on upper floor above critical area". Similarly, if the vibrating equipment is hung from an overhead floor slab beneath a noncritical area, the same vibration isolation should be provided as is recommended for the location designated as "on upper floor above noncritical area".

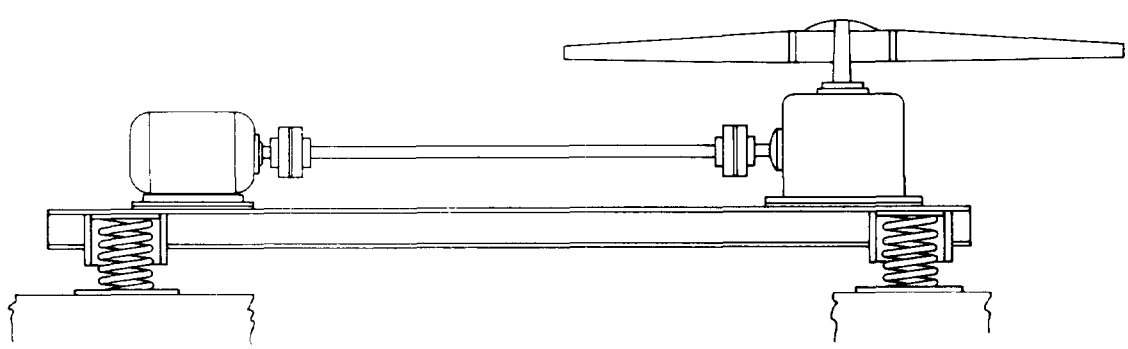

Figure 8-2. Schematic of Vibration Isolation Mounting for Fan and Drive-Assembly of Propeller-Type Cooling Tower.

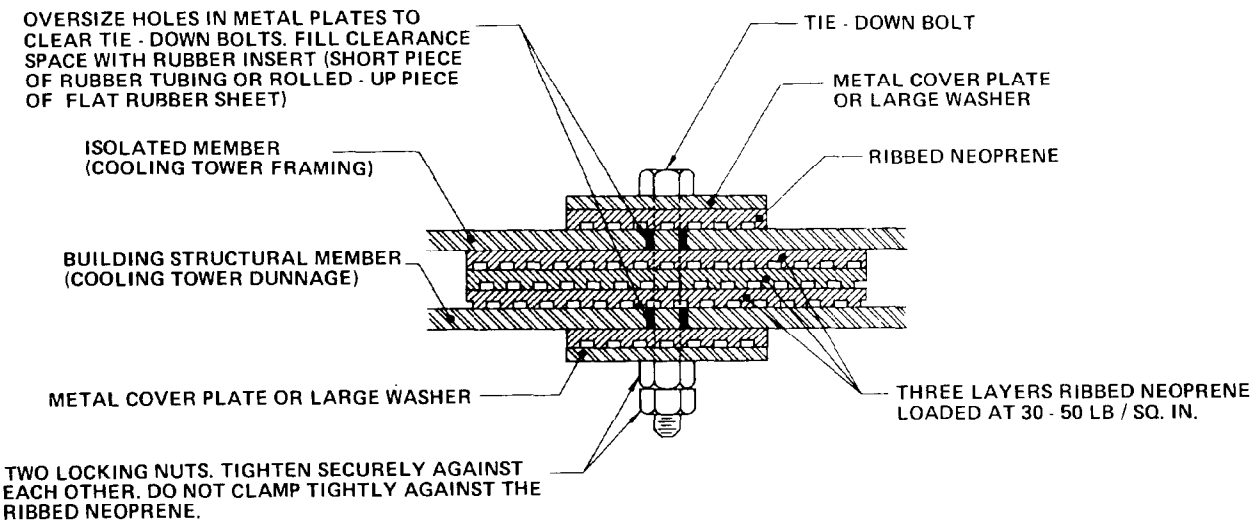

Figure 8-3. Schematic of a Resilient Clamping Arrangement With Ribbed Neoprene Pads.

(2) *Mounting recommendations.* The three columns on the right of the table summarize three basic groups of recommendations: Column 1, the type of mounting; Column 2, the suggested minimum ratio of the weight of the inertia block (when required) to the total weight of all the equipment mounted on the inertia block; and Column 3, the suggested minimum static deflection of the isolator to be used.

(a) When the weight of the inertia block is being considered, the larger weight of the range given should be applied where the nearby critical area is very critical, or where the speed of the equipment is near the lower limit of the speed range given or the rating of the equipment is near the upper limit of the rating range. Conversely, the lower end of the weight range may be applied where the nearby critical area is less critical, or where the speed is near the upper limit of the speed range or the rating is near the lower limit of the rating range.

(b) When the static deflection of the isolators is being considered, these minimum values are keyed to the approximate span of the floor beams; that is, as the floor span increases, the floor deflection increases, and therefore the isolator deflection must increase. The specific minimum deflection in effect specifies the type of isolator that can be used; refer to table 8-1 for the normal range of static deflection for most isolators. Specific selections should be made from manufacturers' catalog data.

(c) The recommendations given here assume that a moderate amount of large equipment (say, more than five or six pieces, totaling more than about 300 to 600 hp) is located on the MER floor. For a smaller array of equipment or for a single piece of equipment remote from other equipment, the recommendations can be relaxed, either by decreasing the static deflection of the mount or by decreasing the weight of the inertia block or even by eliminating the inertia block where a critical area is not involved.

(d) Resilient support of all piping connected to vibrating equipment should be in accordance with paragraph 8-5a. This recommendation applies to the mounting of each piece of vibrating equipment, even though it is not repeated below for each piece of equipment.

b. Centrifugal and axial-flow fans. The recommended vibration isolation mounting for fans are given in table 8-2. Ducts should contain flexible connections at both the inlet and discharge of the fans, and all connections to the fan assembly should be clearly flexible. The entire assembly should bounce with little restraint when one jumps up and down on the unit. Where supply fan assemblies are located over critical areas, it is desirable to install the entire inlet casing and all auxiliary equipment (coil decks and filter sections) on floated concrete slabs. The floated slab may also serve to reduce airborne noise from the fan inlet area into the floor area below. Large ducts (cross-section area over 15 sq feet) that are located within about 30 feet of the inlet or discharge of a large fan (over 20 hp) should be supported from the floor or ceiling with resilient mounts having a static deflection of at least 1/4 inch.

c. Reciprocating-compressor refrigeration equipment. The recommended vibration isolation for this equipment are given in table 8-3. These recommendations apply also to the drive unit used with the reciprocating compressor. Pipe connec-

Table 8-2. Vibration Isolation Mounting for Centrifugal and Axial-Flow Fans.

Equipment Conditions			Mounting Recommendations				
Equipment Location	Power Range (hp)	Speed Range (rpm)	Column 1	Column 2	Column 3		
					30 ft.	40 ft.	50 ft.
On Grade Slab	UNDER 3	UNDER 600 600-1200 OVER 1200		NO ISOLATION REQUIRED			
	3-25	UNDER 600 600-1200 OVER 1200	III	—	1 in. ½ ½		
	26-200	UNDER 600 600-1200 OVER 1200	III	—	1½ in. 1 ½		
On Upper Floor Above Non-Critical Area	UNDER 3	UNDER 600 600-1200 OVER 1200	III III III	— — —	1 in. ½ ½	1½ in. 3/4 ½	2 in. 1 3/4
	3-25	UNDER 600 600-1200 OVER 1200	II III III	2 — —	1 1½ 1	1½ 2 1½	2 3 2
	26-200	UNDER 600 600-1200 OVER 1200	II II II	2 2 2	2 1½ 1	3 2 1½	4 3 2
On Upper Floor Above Critical Area	UNDER 3	UNDER 600 600-1200 OVER 1200	II III III	2 — —	1½ 1½ 1	2 2 1½	3 3 2
	3-25	UNDER 600 600-1200 OVER 1200	II II II	3 2 2	2 1½ 1	3 2 1½	4 3 2
	26-200	UNDER 600 600-1200 OVER 1200	II II II	3 2 2	3 2 1	4 2½ 1½	5 3 2

Col. 1: Mounting type (see text).
Col. 2: Minimum ratio of weight of inertia block to total weight of supported load.
Col. 3: Minimum static deflection of stable steel springs in inches for indicated floor span in feet.

Table 8-3. Vibration Isolation Mounting for Reciprocating Compressor Refrigeration Equipment Assembly.

Equipment Conditions			Mounting Recommendations				
Equipment Location	Cooling Capacity (Tons)	Speed Range (rpm)	Column 1	Column 2	Column 3		
					30 ft.	40 ft.	50 ft.
On Grade Slab	10-50	600-900	III		2 in.		
		901-1200	III		1½		
		1201-2400	III		1		
	51-175	600-900	II	2-3	2		
		901-1200	III		2		
		1201-2400	III		1½		
On Upper Floor Above Non-Critical Area	10-50	600-900	II	2-3	2 in.	3 in.	4 in.
		901-1200	II	2-3	1½	2	3
		1201-2400	II	2-3	1½	1½	2
	51-175	600-900	II	3-4	3	4	5
		901-1200	II	3-4	2	3	4
		1201-2400	II	2-3	2	2	3
On Upper Floor Above Critical Area	10-50	600-900	II	3-4	3	4	5
		901-1200	II	3-4	2	3	4
		1201-2400	II	2-3	2	2	3
	51-175	600-900	I	4-6	3	4	5
		901-1200	II	3-5	2	3	4
		1201-2400	II	3-4	2	2	3

Col. 1: Mounting type (see text).
Col. 2: Minimum ratio of weight of inertia block to total weight of supported load.
Col. 3: Minimum static deflection of stable steel springs in inches for indicated floor span in feet.

tions from this assembly to other equipment should contain flexible connections (see para B-5b).

d. Rotary-screw-compressor refrigeration equip ment. The recommended vibration isolation for this equipment are given in table 8-4.

e. Centrifugal-compressor refrigeration equipment. The recommended vibration isolation for this equipment, including the drive unit and the condenser and chiller tanks, are given in table 8-5.

f. Absorption-type refrigeration equipment. The recommended vibration isolation for this equipment are given in table 8-6.

g. Boilers. The recommended vibration isolation for boilers are given in table 8-7. These apply for boilers with integrally attached blowers. Table 8-2 should be followed for the support of blowers that are not directly mounted on the boiler. A flexible connection or a thermal expansion joint should be installed in the exhaust breaching between the boiler and the exhaust stack.

h. Steam values. Steam valves are usually supported entirely on their pipes; paragraph 8-5a should be applied to the resilient support of steam piping, including steam valves.

i. Cooling towers. The recommended vibration isolation for propeller-type cooling towers are given in table 8-8. Additional for the installation are given in paragraph 8-3f, which describes the Type V mounting assembly. The recommended vibration isolation for centrifugal-fan cooling towers are given in table 8-9.

j. Motor-pump assemblies. Recommended vibration isolation for motor-pump units are given in table 8-10. Electrical connections to the motors should be made with long "floppy" lengths of flexible armored cable, and piping should be resiliently supported. For most situations, a good isolation mounting of the piping will overcome the need for flexible connections in the pipe. An important function of the concrete inertia block (Type II mounting) is its stabilizing effect against undue bouncing of the pump assembly at the instant of starting. This gives better long-time protection to the associated piping. These same recommendations may be applied to other motor-driven rotary devices such as centrifugal-type air compressors and motor-generator sets in the power range up to a few hundred horsepower.

k. Steam turbines. Table 8-11 provides a set of general isolation recommendations for steam-turbine-driven rotary equipment, such as gears, generators, or centrifugal-type gas compressors. The material given in table 8-5 applies when a steam turbine is used to drive centrifugal-compressor refrigeration equipment. The recommendations given in table 8-3 apply when a steam turbine is used to drive reciprocating-compressor refrigeration equipment or reciprocating-type gas compressors.

l. Gears. When a gear is involved in a drive system, vibration isolation should be provided in accordance with recommendations given for either the main power drive unit or the driven unit, whichever imposes the more stringent isolation conditions.

m. Transformers. Recommended vibration isolation for indoor transformers are given in table 8-12. In addition, power leads to and from the transformers should be as flexible as possible. In outdoor locations, earthborne vibration to nearby neighbors is usually not a problem, so no vibration isolation is suggested. If vibration should become a problem, the transformer could be installed on neoprene or compressed glass fiber pads having 1/4-inch static deflection.

n. Air compressors. Recommended mounting for centrifugal type air compressors of less than 10 hp are the same as those given for motor-pump units in table 8-10. The same recommendations would apply for small (under 10 hp) reciprocating type air compressors. For reciprocating type air compressors (with more than two cylinders) in the 10 to 50 hp range, the recommendations given in table 8-3 apply for the particular conditions. For 10 to 100 hp, one or two cylinder, reciprocating type air compressors, the recommendations of table 8-13 apply. This equipment is a potentially serious source of low frequency vibration in a building if it is not isolated. In fact, the compressor should not be located in certain parts of the building, even if it is vibration isolated. The forbidden locations are indicated in table 8-13. When these compressors are used, all piping should contain flexible connections (para 8-5b), and the electrical connections should be made with flexible armored cable.

o. Natural-gas and liquid-fuel engines, reciprocating and turbine. Vibration isolation of these engines is discussed in detail in TM 5-805-g.

8-5. Vibration Isolation-Miscellaneous.

a. Resilient pipe supports. all piping in the MER that is connected to vibrating equipment should be supported from resilient ceiling hangers or from floor-mounted resilient supports.

(1) As a general rule, the first three pipe supports nearest the vibrating equipment should have a static deflection of at least one-half the static deflection of the mounting system used with that equipment. Beyond the third pipe support, the static deflection can be reduced to 1/4 inch or 1/2 inch for the remainder of the pipe run in the MER.

(2) When a pipe passes through the MER wall, a minimum l-inch clearance should be provided between the pipe and the hole in the wall. The pipe should be supported on either side of the hole, so that the pipe does not rest on the wall. The clearance space should then be stuffed with fibrous filler material and sealed with a nonhardening caulking compound at both wall surfaces.

(3) Vertical pipe chases through a building should not be located beside acoustically critical areas. If they are located beside critical areas, pipes should be resiliently mounted from the walls of the pipe chase for a distance of at least 10 feet beyond each such area, using both low-frequency and high-frequency isolation materials.

(4) Pipes to and from the cooling tower should be resiliently supported for their full length between the cooling tower and the associated MER. Steam pipes should be resiliently supported for their entire length of run inside the building. Resilient mounts should have a static deflection of at least 1/2 inch.

(5) In highly critical areas, domestic water pipes and waste lines can be isolated with the use of 1/4-inch- to 1/2-inch-thick wrappings of felt pads under the pipe strap or pipe clamp.

(6) Whenever a steel spring isolator is used, it should be in series with a neoprene isolator. For ceiling hangers, a neoprene washer or grommet should always be included; and if the pipe hangers are near very critical areas, the hanger should be a combination hanger that contains both a steel spring and a neoprene-in-shear mount.

(7) During inspection, the hanger rods should be checked to ensure they are not touching the sides of the isolator housing and thereby shorting-out the spring.

b. Flexible pipe connections. To be effective, a flexible pipe connection should have a length that is approximately 6 to 10 times its diameter. Tie rods should not be used to bolt the two end flanges of a flexible connection together. Flexible connections are either of the bellows type or are made up of wire-reinforced neoprene piping, sometimes fitted with an exterior braided jacket to confine the neoprene. These connections are useful when the equipment is subject to fairly high-amplitude vibration, such as for reciprocating-type compressors. Flexible connections generally are not necessary when the piping and its equipment are given thorough and compatible vibration isolation. For serious pipe vibration problems, two flexible connections should be used, mounted 90 degrees to each other. Inertial masses may be attached to the piping to add stability and help maintain pipe alignment.

c. Nonvibrating equipment. When an MER is located directly over or near a critical area, it is usually desirable to isolate most of the nonvibrating equipment with a simple mount made up of one or two pads of neoprene or a 1 inch or 2 inch layer of compressed glass fiber. Heat exchangers, hot water heaters, water storage tanks, large ducts, and some large pipe stands may not themselves be noise sources, yet their pipes or their connections to vibrating sources transmit small amounts of vibrational energy that they then may transmit into the floor. A simple minimum isolation pad will usually prevent this noise transfer.

d. Summary. In this chapter, fairly complete vibration isolation mounting are laid out for most of the equipment included in an MER. Most of these have been developed and proven over many years of use. Although all the entries of the accompanying tables have not been tested in actual equipment installations, the schedules are fairly self consistent in terms of various locations and degrees of required isolation. Hence, the mounting are considered realistic and reliable. They are not extravagant when considered in the light of the extremely low vibration levels required to achieve near inaudibility. The noise and vibration control methods given here are designed to be simple to follow and to put into use. If these methods and recommendations are carried out, with appropriate attention to detail, most equipment installations will be tailored to the specific needs of the building and will give very satisfactory results acoustically.

Table 8-4. Vibration Isolation Mounting for Rotary Screw Compressor Refrigeration Equipment Assembly.

Equipment Conditions			Mounting Recommendations				
Equipment Location	Cooling Capacity (Tons)	Speed Range (rpm)	Column 1	Column 2	Column 3		
					30 ft.	40 ft.	50 ft.
On Grade Slab	100-500	2400-4800	III		1 in.		
On Upper Floor Above Non-Critical Area	100-500	2400-4800	III		1 in.	1½ in.	2 in.
On Upper Floor Above Critical Area	100-500	2400-4800	II	2-3	1 in.	1½ in.	2 in.

Col. 1: Mounting type (see text).
Col. 2: Minimum ratio of weight of inertia block to total weight of supported load.
Col. 3: Minimum static deflection of stable steel springs in inches for indicated floor span in feet.

Table 8-5. Vibration Isolation Mounting for Centrifugal Compressor Refrigeration Equipment Assembly.

Equipment Conditions			Mounting Recommendations				
Equipment Location	Cooling Capacity (Tons)	Speed Range (rpm)	Column 1	Column 2	Column 3		
					30 ft.	40 ft.	50 ft.
On Grade Slab	100-500	OVER 3000	III		3/4 in.		
	501-4000	OVER 3000	III		1 in.		
On Upper Floor Above Non-Critical Area	100-500	OVER 3000	III		1 in.	1½ in.	2 in.
	501-4000	OVER 3000	III		1½	2	3
On Upper Floor Above Critical Area	100-500	OVER 3000	II	2-3	1½	2	3
	501-4000	OVER 3000	II	3-5	1½	2	3

Col. 1: Mounting type (see text).
Col. 2: Minimum ratio of weight of inertia block to total weight of supported load.
Col. 3: Minimum static deflection of stable steel springs in inches for indicated floor span in feet.

Table 8-6. Vibration Isolation Mounting for Absorption-Type Refrigeration Equipment Assembly.

Equipment Conditions			Mounting Recommendations				
Equipment Location	Cooling Capacity (Tons)	Speed Range (rpm)	Column 1	Column 2	Column 3		
					30 ft.	40 ft.	50 ft.
On Grade Slab	ALL SIZES		IV		¼ in.		
On Upper Floor Above Non-Critical Area	ALL SIZES		III		½ in.	3/4 in.	1 in.
On Upper Floor Above Critical Area	ALL SIZES		III		1 in.	1½ in.	2 in.

Col. 1: Mounting type (see text).
Col. 2: Minimum ratio of weight of inertia block to total weight of supported load.
Col. 3: Minimum static deflection of isolators in inches for indicated floor span in feet.

Table 8-7. Vibration Isolation Mounting for Boilers.

Equipment Conditions			Mounting Recommendations				
Equipment Location	Heating Capacity (bhp)	Speed Range (rpm)	Column 1	Column 2	Column 3		
					30 ft.	40 ft.	50 ft.
On Grade Slab	UNDER 200		—		NOT REQUIRED		
	200-1000				NOT REQUIRED		
	OVER 1000				NOT REQUIRED		
On Upper Floor Above Non-Critical Area	UNDER 200		III		1/8 in.	¼ in.	½ in.
	200-1000		III		¼	½	1
	OVER 1000		III		¼	½	1
On Upper Floor Above Critical Area	UNDER 200		III		½	1	1½
	200-1000		III		1	1½	2
	OVER 1000		III		1	1½	2

Col. 1: Mounting type (see text).
Col. 2: Minimum ratio of weight of inertia block to total weight of supported load.
Col. 3: Minimum static deflection of isolators in inches for indicated floor span in feet.

Table 8-8. Vibration Isolation Mounting for Propeller-Type Cooling Towers.

Equipment Conditions			Mounting Recommendations			
Equipment Location	Power Range (hp)	Speed Range (rpm)	Column 1	Column 2	Column 3	
On Grade Slab	VIBRATION ISOLATION USUALLY NOT REQUIRED					
On Upper Floor Above Non-Critical Area	UNDER 25	150-300 301-600 OVER 600	V	INSTALL ON	5 in. 3 3	SPRINGS MAY BE LOCATED
	25-150	150-300 301-600 OVER 600	V	DUNNAGE ATTACHED TO	6 4 3	UNDER DRIVE ASSEMBLY
	OVER 150	150-300 301-600 OVER 600	V	BUILDING COLUMNS ONLY	6 5 4	OR UNDER TOWER BASE
On Upper Floor Above Critical Area	SAME AS FOR LOCATION ABOVE NONCRITICAL AREA, EXCEPT INSTALL RIBBED OR WAFFLE-PATTERN NEOPRENE BETWEEN TOWER AND BUILDING.					

Col. 1: Mounting type (see text).
Col. 2: Minimum ratio of weight of inertia block to total weight of supported load (not applicable here).
Col. 3: Minimum static deflection of stable steel springs in inches.

Table 8-9. Vibration Isolation Mounting for Centrifugal-Type Cooling Towers.

Equipment Conditions			Mounting Recommendations				
					Column 3		
Equipment Location	Power Range (hp)	Speed Range (rpm)	Column 1	Column 2	30 ft.	40 ft.	50 ft.
On Grade Slab	VIBRATION ISOLATION USUALLY NOT REQUIRED						
On Upper Floor Above Non-Critical Area	UNDER 25	450-900 901-1800 OVER 1800	III		1 in. 3/4 3/4	1½ in. 1 1	2 in. 1½ 1½
	25-150	450-900 901-1800 OVER 1800	III		1½ 1 3/4	2 1½ 1	3 2 1½
	OVER 150	450-900 901-1800 OVER 1800	III		2 1½ 1	3 2 1½	4 3 2
On Upper Floor Above Critical Area	UNDER 25	450-900 901-1800 OVER 1800	III	INCLUDE RIBBED OR WAFFLE-PATTERN NEOPRENE BETWEEN TOWER AND BUILDING	1½ 1 3/4	2 1½ 1	3 2 1½
	25-150 -	450-900 901-1800 OVER 1800	III		2 1½ 1	3 2 1½	4 3 2
	OVER 150	450-900 901-1800 OVER 1800	III		3 1½ 1	4 2 1½	6 3 2

Col. 1: Mounting type (see text).
Col. 2: Minimum ratio of weight of inertia block to total weight of supported load.
Col. 3: Minimum static deflection of stable steel springs in inches for indicated floor span in feet.

Table 8-10. Vibration Isolation Mounting for Motor-Pump Assemblies.

Equipment Conditions			Mounting Recommendations				
Equipment Location	Power Range (hp)	Speed Range (rpm)	Column 1	Column 2	Column 3		
					30 ft.	40 ft.	50 ft.
On Grade Slab	UNDER 20	450-900 901-1800 1801-3600	VIBRATION ISOLATION USUALLY NOT REQUIRED FOR ACOUSTIC PURPOSES				
	20-100	450-900 901-1800 1801-3600	II II II	2-3 1½-2½ 1½-2½	1½ 1 3/4		
	OVER 100	450-900 901-1800 1801-3600	II II II	2-3 2-3 1½-2½	2 1½ 1		
On Upper Floor Above Non-Critical Area	UNDER 20	450-900 901-1800 1801-3600	II II II	2-3 1½-2½ 1½-2½	1½ in. 1 3/4	2 in. 1½ 1	3 in. 2 1½
	20-100	450-900 901-1800 1801-3600	II II II	2-3 2-3 1½-2½	1½ 1 1	2 1½ 1½	3 2 2
	OVER 100	450-900 901-1800 1801-3600	II II II	3-4 2-3 2-3	2 1½ 1	3 2 1½	4 3 2
On Upper Floor Above Critical Area	UNDER 20	450-900 901-1800 1801-3600	II II II	3-4 2-3 2-3	1½ 1 3/4	2 1½ 1	3 2 1½
	20-100	450-900 901-1800 1801-3600	II II II	3-4 2-3 2-3	2 1½ 1	3 2 1½	4 3 2
	OVER 100	450-900 901-1800 1801-3600	II II II	3-4 2-3 2-3	3 2 1½	4 3 2	5 4 3

Col. 1: Mounting type (see text).
Col. 2: Minimum ratio of weight of inertia block to total weight of supported load.
Col. 3: Minimum static deflection of stable steel springs in inches for indicated floor span in feet.

Table 8-11. Vibration Isolation Mounting for Steam-TurbineDriven Rotary Equipment.

Equipment Conditions			Mounting Recommendations				
Equipment Location	Power Range (hp)	Speed Range (rpm)	Column 1	Column 2	Column 3		
					30 ft.	40 ft.	50 ft.
On Grade Slab	500-1500	OVER 3000	III		½ in.		
	1501-5000	OVER 3000	III		3/4		
	5001-15000	OVER 3000	III		1		
On Upper Floor Above Non-Critical Area	500-1500	OVER 3000	III		1 in.	1½ in.	2 in.
	1501-5000	OVER 3000	III		1½	2	3
	5001-15000	OVER 3000	III		2	3	4
On Upper Floor Above Critical Area	500-1500	OVER 3000	II	2-3	1	1½	2
	1501-5000	OVER 3000	II	2-3	1½	2	3
	5001-15000	OVER 3000	II	2-3	2	3	4

Col. 1: Mounting type (see text).
Col. 2: Minimum ratio of weight of inertia block to total weight of supported load.
Col. 3: Minimum static deflection of stable steel springs in inches for indicated floor span in feet.

Table 8-12. Vibration Isolation Mounting for Transformers.

Equipment Conditions			Mounting Recommendations				
Equipment Location	Power Range (kva)	Speed Range (rpm)	Column 1	Column 2	Column 3		
					30 ft	40 ft	50 ft
On Grade Slab	UNDER 10		IV		1/8 in.		
	10-100		IV		1/8		
	OVER 100		IV		¼		
On Upper Floor Above Non-Critical Area	UNDER 10		IV		1/8 in.	¼ in.	¼ in.
	10-100		III		¼	½	½
	OVER 100		III		¼	½	1
On Upper Floor Above Critical Area	UNDER 10		III		¼	½	3/4
	10-100		III		½	3/4	1
	OVER 100		III		½	1	1½

Col. 1: Mounting type (see text).
Col. 2: Minimum ratio of weight of inertia block to total weight of supported load.
Col. 3: Minimum static deflection of isolators in inches for indicated floor span in feet.

Table 8-13. Vibration Isolation Mounting for One or Two-Cylinder Reciprocating-Type Air Compressors in the 10-to l00-hp Size Range.

Equipment Conditions			Mounting Recommendations				
					Column 3		
Equipment Location	Power Range (hp)	Speed Range (rpm)	Column 1	Column 2	30 ft.	40 ft.	50 ft.
On Grade Slab	UNDER 20	300-600	I	4-8	4 in.		
		601-1200	I	2-4	2		
		1201-2400	I	1-2	1		
	20-100	300-600	I	6-10	5		
		601-1200	I	3-6	3		
		1201-2400	I	2-3	1½		
On Upper Floor Above Non-Critical Area	UNDER 20	300-600	NOT RECOMMENDED				
		601-1200	I	3-6	4 in.	NO[a]	NO[a]
		1201-2400	I	2-3	2	4	NO[a]
	20-100	300-600	NOT RECOMMENDED				
		601-1200	NOT RECOMMENDED				
		1201-2400	I	3-6	3	6	NO[a]
On Upper Floor Above Critical Area	UNDER 20	300-600	NOT RECOMMENDED				
		601-1200	NOT RECOMMENDED				
		1201-2400	I	3-6	4	NO[a]	NO[a]
	20-100	300-2400	NOT RECOMMENDED				

Col. 1: Mounting type (see text).
Col. 2: Minimum ratio of weight of inertia block to total weight of supported load.
Col. 3: Minimum static deflection of stable steel springs in inches for indicated floor span in feet.

[a] "NO" indicates "NOT RECOMMENDED" for this combination of conditions.

CHAPTER 9

MECHANICAL NOISE SPECIFICATIONS

9-1. Objective.

Once noise and vibration control has been determined it is then necessary to specify the performance and materials for the noise control treatments. This chapter covers specifications for specialized acoustical products commonly used in building mechanical systems. Manufactures can also provide guidance for acoustical products. Commonly used noise control products include mufflers in ducting systems and vibration isolation products. In addition a noise level limit may be imposed on the equipment to be used, in which case it is the responsibility of the manufacturer to provide suitable noise or vibration control which will meet the criteria.

9-2. General Consideration.

All noise control specifications should include some common information. This includes:

a. Some statement as to the rationale for the noise control treatment. Although it may not be the responsibility of the supplier to met the overall objective, if they know the overall objective they may be able to provide guidance on the application of their product to aid in achieving the overall objective.

b. Materials of construction that will be acceptable. This can be stated specifically or it can be given in general terms.

c. Conditions under which the material or items will be used. This mainly pertains to the environmental conditions (e.g. temperature, flow velocity, pressure etc.).

d. Acoustical performance that is expected. This can be the specific performance of a noise control item or it can be the overall performance.

e. How the acoustical performance is to be evaluated. This is the most important and difficult portion of any specification. This may take the form of a laboratory test or a test in the field under actual operating conditions. The references provide ASTM, ARI and ASHRAE standards commonly used to evaluate acoustical performance in the laboratory and in the field.

f. And finally what action is expected in the event that the specified performance is not met.

9-3. Partitions And Enclosures.

The performance specification of partitions and enclosures usually includes the sound isolation properties. The most common method is to specify the sound transmission loss (TL) required. The laboratory procedure is given in ASTM E 90. ASTM standards E 336 and E 966 provide procedures for in-situ evaluations of building partitions and building facades, respectively. For machinery enclosures the interior sound absorptive properties also need to be specified. ASTM standard C 423 and E 795 provides methods for mounting and measuring sound absorptive properties in the laboratory. ASTM standard E 596 provides a laboratory method of rating the noise reduction of sound isolating enclosures. In addition there are standards for the installation of partitions which are intended to provide sound isolation, such as ASTM E497.

9-4. Mufflers and Duct Lining For Ducted Ventilation Systems.

The acoustical performance for duct lining and mufflers is usually specified to be made in accordance with ASTM Standard E477. It should be noted that this is a laboratory standard and includes insertion loss and regenerated noise (for mufflers). All suppliers of prefabricated duct mufflers should be required to submit muffler performance in accordance with this standard. In addition many suppliers of duct mufflers will also provide guidance on how actual field installation may modify the laboratory performance.

9-5. Sound Levels For Equipment.

Due to the variety of equipment installed in buildings and the multiplicity of uses for each equipment item, there are a number of standards for measurement of sound from mechanical equipment. There are many ANSI standards that describe general procedures for the measurement of sound power levels and sound levels of equipment, both in the laboratory and in field. ARI has produced several standards for the measurement of air-conditioning equipment. The noise level estimates given in this manual will probably equal or exceed the actual noise levels of approximately 80 to 90 percent of all those types of machinery that will be encountered in typical building use. In many cases, actual noise levels may fall 3 to 6 dB below the estimates, and for some types of equipment some noise levels may fall as much as 10 to 15 dB below the estimates. Thus, there appears to be no shortage of available equipment that will fall at or below the estimated noise levels given in

the manual, and it would not be discriminatory or unreasonable to specify that any purchased equipment for a particular building be required not to exceed the estimated values given here for that equipment. This is especially true if the actual acoustic design of a wall or floor or room treatment is dependent upon one or two particularly noisy pieces of equipment. A noise specification would not be necessary for relatively quiet equipment that does not dictate noise control design for the MER or the building.

a. Waiver. If a noise level specification is required to be met for a particular piece of equipment, and this becomes a "hardship" on the manufacturer or the owner in terms of cost or availability, the noise specification could be waived, depending on the response of all the bidders. If some bidders agree to meet the specification while others do not, this could be a valid basis for selecting the quieter equipment. If no bidders can meet the specification, the specification can be waived, but it may be necessary to reevaluate the noise control requirements of the MER, if this particular equipment is so noisy that it is responsible for the noise design in the first place. Of course, it is the primary purpose of this manual to prevent just such situations as this, as too many waivers would negate the value of the noise evaluation as a part of the design phase of the building. If the equipment measured for this study represents a fair sampling, it is likely that most of the equipment would meet a noise specification.

b. Sample specifications. The sample noise level specifications given below offer a broad set of procedures and suggestions for specifying noise data (SPL or PWL) on any desired piece of equipment. This is not offered as a "standard" for noise measurements, however. Any acceptable and applicable measurement and specification procedure recommended by an appropriate standards group (such as ANSI, ISO, ASTM, IEEE, ASHRAE, or others) may be used as a basis for setting up an equipment noise specification.

(1) *Sample SPL specifications.* Table 9-1 is an example form of a SPL specification. The type of equipment and the desired maximum sound pressure levels are inserted in the appropriate blanks. The 3 foot distance is taken from the nearest surface rather than from the acoustic center, since the exact location of the acoustic center is not easily defined. A minimum room volume of 4000 ft. 3 is offered, but this could be modified to accept somewhat smaller rooms. Small rooms are more subject to standing wave fluctuations. Even at the 3 foot distance, SPL values for the same source may vary as much as 5 to 7 dB from an outdoor to an indoor site (or from a large room to a small room). Since it is impractical to specify Room Constant limits for the measurement room, it then becomes necessary to judge or compare various sound level submittals in terms of their ability to meet the design need. A sound source measured in a large-volume room, in a highly absorbent room, or outdoors will produce lower sound levels than when measured in a small or reverberant room. This difference is an important aspect of comparing competitive equipment.

(2) *Sample PWL specification.* Table 9-2 is an example form of a PWL specification.

Table 9-1. Sample Sound Pressure Level Specification

1. The maximun sound pressure levels measured at a distance of 3 ft. from the *(equipment in question)* shall not exceed the following decibel values in the nine octave frequency bands:

Octave Band (Hz)	Sound Pressure Level (dB re 20 micropascals)	
31	_____	(Insert desired sound pressure levels in blanks)
63	_____	
125	_____	
250	_____	
500	_____	
1000	_____	
2000	_____	
4000	_____	
8000	_____	

2. At least four sets of sound pressure level readinqs shall be submitted with the bid, where each set is taken at a 3-ft. distance from each of the four principal orthogonal surfaces of the equipment. Each octave band reading of each set of readings shall be no greater than the specified value of Item 1 above.

3. The test room in which the noise measurements are conducted shall have a volume of not less than 4000 $ft.^3$ and all principal surface areas of the room shall be described in sufficient acoustic detail to permit an estimation of the approximate Room Constant or Room Absorption for the space.

4. During the tests, the equipment shall be in normal operation at not less than 50% full rated load (or at a specified mutually acceptable load' condition). The tests shall be carried out by the equipment manufacturer or by an approved testing agency, having proven capability in noise measurements and using approved measurement equipment and acceptable measurement procedures. Approved "standards" of measurements shall apply.

5. In lieu of the tests under Item 4 above, final testing for conformance with the Item 1 noise levels may be made following complete installation of the equipment in the customer's building, provided the equipment manufacturer will remove and replace the equipment at his own expense if it fails to meet the noise tests. To be acceptable, the replacement equipment must meet the noise tests. For the on-site tests, the equipment shall be in normal operation at not less than 50% hill rated load (or at a specified mutually acceptable load condition), and the tests shall be in accordance with the procedures given in Item 4 above.

6. For all noise tests, the ambient sound levels of the test area shall be at least 10 dB below the specified levels of Item 1 above, and the octave band sound measurement equipment shall meet the applicable ANSI standards for that type of equipment.

Table 9-2. Sample Sound Power Level Specification.

1 The sound power levels for the *(equipment in question)* shall not exceed the following values in the nine octave frequency bands:

Octave Band (Hz)	Sound Power Level (dB re 10^{-12} watt)
31	_____
63	_____
125	_____
250	_____
500	_____
1000	_____
2000	_____
4000	_____
8000	_____

(Insert desired values in blanks)

During the tests, the equipment shall be in normal operation at not less than 50% full rated load (or at a specified mutually acceptable load condition). The tests shall be carried out by the equipment manufacturer or by an approved testing agency, having proven capability in noise measurernerds and using approved measurement equipment and acceptable measurement procedures. Approved "standards" of measurements shall apply.

In lieu of the tests under Item 2 above, final testing for comformance with the Item 1 noise levels may be made following complete installation of the equipment in the custmer's building, provided the equipment manufacturer will remove and replace the equipment at his own expense if it fails to meet the noise tests. To be acceptable, the replacement equipment must meet the noise tests. For the on-site tests, the equipment shall be in normal operation at not less than 50% full rated load (or at a specified mutually acceptable load condition), and the tests shall be in accordance with the procedures given in Item 2 above.

For all noise tests, the ambient sound levels of the test area shall be at least 10 dB below the equipment sound levels, and the octave band sound measurement equipment shall meet the applicable ANSI standards for that type of equipment.

Sound pressure level readings (in decibels re 20 micropascals) and all other data (including test room size and acoustic characteristics) used in the determination of the sound power levels shall be submitted with the bid.

CHAPTER 10

NOISE AND VIBRATION MEASUREMENTS

10-1. Objective.

In the event that demonstration of compliance with noise or vibration criteria is required, sound or vibration measurements will be required. Within the scope of this manual, sound and vibration measurements and instrumentation might be involved in two types of situations: noise and vibration in buildings, and community noise or measurements. This chapter discusses these subjects.

10-2. Sound And Vibration Instrumentation.

Instrumentation for measuring sound and vibration vary widely in complexity and capability. However most sound and vibration level measurements for building mechanical equipment systems can be obtained with hand-held, battery operated meters. A basic sound level meter consists of a microphone, electronic circuits, and a display. Vibration measurements can be made with a sound level meter if the microphone is replaced with a vibration transducer. The most common vibration transducer is an accelerometer. With the use of an accelerometer the meter will display acceleration level in dB. Many sound level meters are equipped with "internal calibration" capabilities. While this is adequate for checking the internal electric circuits and display, the internal calibration does not check the operation of the microphone or accelerometer. Therefore it is highly recommended that all sound level meter systems be equipped with a separate calibrator. Sound level calibrators generate a known sound level and vibration calibrators generate a known vibration signal. As a minimum the sound level meter should be equipped with internal filters providing the capability octave band levels from 16 to 8,000 Hz. Many sound level meters have the capability to "A-weight" the octave band levels. The use of A-weighting is not appropriate for evaluating building mechanical systems.

a. Sound level meters. The American National Standards Institute (ANSI) provides specifications for the acoustical and electrical response of sound level meters. ANSI Standard S1.4 specifies four types of sound level meters:

Type 1	Precision
Type 2	General Purpose
Type 3	Survey
Type S	Special Purpose

The Type 1 Sound Level Meter has the tightest specification on frequency response, precision and stability. This meter is fitted with a microphone; it has a stable amplifier, controllable attenuators, and a meter that permits reading of sound levels over a wide range of values, such as from 30 decibels to 130 decibels sound pressure level (SPL) or more. The accuracy of the reading may be expected to be within 1 to 1.5 dB of the true SPL. This instrument also has the A-, B-, and C-weighted filters that are held to within specified tolerances, and the meter has a "slow" and a "fast" response. At the "slow" setting, the meter in effect integrates the sound pressure level fluctuations of the last half second (approximately) and shows the "average" of that fluctuating signal. The "slow" setting is used for readings of "continuous" noise, i.e., noise that is produced by a continuing sound source without any noticeable periodic change (a fan would be considered a "continuous" source of noise, a pile drive would not). The "fast" response integrates the fluctuations of the last 1/8 second (approximately); thus the needle jumps back and forth over a wider range of the meter face as it attempts to follow all short-term instantaneous changes. The Type 2 Sound Level Meter has slightly less stringent specifications than apply to the Type 1 meter. The A-, B-, and C-weighted networks and the directionality limits of the microphone are slightly relaxed. The Type 3 Sound Level Meter is for general survey applications, where still less accuracy is acceptable. The Type 3 instrument is not acceptable for OSHA use, nor for any noise level application involving compliance with noise codes, ordinances, or standards. The Type S Sound Level Meter may be a simplified version of any of the Type 1, 2, or 3 instruments. It is a special purpose meter that may have, for example, Type 1 accuracy and only an A-weighted filter. In this case, it would be described as Type S1A ("S" indicates Special, "1" indicates Type 1 accuracy, and "A" indicates A-weighted filter). The Type S meter must carry a designation that describes its function (such as Type S1A or Type S2C, etc.), and must be constructed to meet the appropriate specification applicable to that special combination.

b. Octave band filters. ANSI standards also exist on the frequency limits and tolerances of octave band and one-third octave band sound and vibration analyzers (ANSI S1.11). These filters are

given a Class 1, 2 or 3 designation. Class 3 filters have the highest frequency discrimination and Class 1 have the lowest. It is recommended that all octave band filter sets used for the evaluation of noise in buildings, with respect to compliance with noise or vibration specifications, have a Class 2 or higher designation. For cursory evaluation a Class 1 will be sufficient.

c. Microphones. Microphones are categorized by their frequency response, level sensitivity and directionality. Most commonly provided microphones will provide suitable frequency response (e.g. 10 to 10,000 Hz) and level sensitivity (30 to 130 dB) for the evaluation of mechanical equipment in buildings. The microphone directionality is important however. Measurement microphones directionality is typically given as “free-field” or “random incidence”. Free field microphones are intended for use outdoors and the microphone should be aimed at the sound source under investigation. Random incidence microphones are used indoors where the reverberant sound is significant. There are adapters that can be applied to a free field microphone when used indoors.

d. Accelerometers. Due to their small size, durability and extended frequency response, accelerometers are the most common vibration transducers. As a general rule the sensitivity of an accelerometer is directly proportional to the physical size (e.g. larger accelerometers usually can measure lower vibration levels). And the frequency response is inversely proportional to the frequency response (e.g. accelerometers with an extended frequency response may be limited in measuring low vibration levels.) Some accelerometers require a external power supply in order to operate an pre-amp that is incorporated into the accelerometer casing. There exists a large variety of accelerometers and once the intended purpose is ascertained, the manufactures can provide guidance on the most appropriate type and model.

10-3. Measurement Of Noise And Vibration In Buildings.

a. Noise measurements in buildings are usually made either to determine if RC or NC curves have been met or to search for the cause of their not having been met. In conducting sound or vibration measurements utilize the following procedure:

(1) Prior to making measurements ensure the meter is in proper working order and calibrate the measurement system with the external calibrator.

(2) Prior to making any measurements, survey the room to determine how the levels vary over the space.

(3) Choose measurement locations that are indicative of the critical use of the space.

(4) Verify and document the operation of the mechanical equipment.

(5) Conduct the measurements using the slow meter response. Note, for sound level measurements, locations within 3 feet of reflecting surfaces should be avoided if possible. For vibration measurements ensure that the accelerometer is properly mounted and oriented in the desired direction.

(6) Upon completion of the measurements, reverify and document the operation of the equipment.

(7) If possible conduct measurements when the equipment is not in operation.

(8) As a final step check the operating order of the meter and then recalibrate.

b. Conducting measurements after the equipment has been turned off is extremely helpful. A comparison of the measurement with and without the equipment in operation will indicate if the measurements are indicative of the equipment or some other extraneous source. If the level decreases after the equipment has been turned off, then the measurements are indicative of the equipment under evaluation. If the sound level does not decrease after the equipment is turned off, then the measured level is not indicative of the equipment under evaluation. If the decrease is more than 2 dB but less than 10 dB, the measured levels after the equipment has been shut down can be subtracted from the levels with the equipment (see appendix C). Usually it is best to conduct these measurements at night or when the building is not in use. At these times it is easier to turn on and off equipment and extraneous sources are at a minimum.

10-4. Measurement Of Noise And Vibration Outdoors.

The consideration for measuring noise and vibration outdoors is identical to that for indoor measurements. The most significant factor is the environmental influence on the transmission of the sound. Environmental factors, such as wind, humidity and temperature gradients can produce significant (e.g. 5, 10 dB or greater) variations in the measured sound level. Therefore it is important to document the environmental conditions at the time of the measurements. Ideally measurements should only be made under neutral conditions (e.g. no wind, cloudy overcast day).

APPENDIX A

REFERENCES

Government Publications

Departments of the Army, the Navy, and the Air Force
TM 5-805-9/AFM 88-20/Power Plant Acoustics
NAVFAC DM 3.14

Nongovernment Publications

American National Standards Institute (ANSI), Inc., Dept. 671, 1430 Broadway, New York, N.Y. 10018

S1.4-1983	Specification for Sound Level Meters
S1.4A-1985	Amendment to S1.4-1983
S1.11-1966 (R 1976)	Specification for Octave, Half-Octave, and Third-Octave Band Filter Sets

Air Conditioning and Refrigeration Institute (ARI), 1501 Wilson Boulevard, Arlington, VA 22209

575	Method of Measuring Sound Within an Equipment Space
885	Procedure for Estimating Occupied Space Sound Levels in the Application of Air

American Society for Testing and Materials (ASTM), Inc., 1916 Race St., Philadelphia, PA 19103

C423	Sound Absorption and Sound Absorption Coefficients by the Reverberation Room Method
E90	Method for Laboratory Measurement of Airborne-Sound Transmission Loss of Building Partitions
E336	Test Method for Measurement of Airborne Sound Insulation in Buildings
E413	Determination of Sound Transmission Class
E477	Method of Testing Duct Liner Materials and Prefabricated Silencers for Acoustical and Airflow Performance
E497	Recommended Practice for Installation of Fixed Partitions of Light Frame Type for the Purpose of Conserving Their Sound Insulation Efficiency
E596	Methods for Laboratory Measurements of the Noise Reduction of Sound-Isolating Enclosures
E795	Practices for Mounting Test Specimens During Sound Absorption Tests

APPENDIX B

BASICS OF ACOUSTICS

B-1. Introduction

a. This appendix presents the basic quantities used to describe acoustical properties. For the purposes of the material contained in this document perceptible acoustical sensations can be generally classified into two broad categories, these are:

(1) *Sound.* A disturbance in an elastic medium resulting in an audible sensation. Noise is by definition "unwanted sound".

(2) *Vibration.* A disturbance in a solid elastic medium which may produce a detectable motion.

b. Although this differentiation is useful in presenting acoustical concepts, in reality sound and vibration are often interrelated. That is, sound is often the result of acoustical energy radiation from vibrating structures and, sound can force structures to vibrate. Acoustical energy can be completely characterized by the simultaneous determination of three qualities. These are:

(1) *Level or Magnitude.* This is a measure of the intensity of the acoustical energy.

(2) *Frequency or Spectral Content.* This is a description of an acoustical energy with respect to frequency composition.

(3) *Time or Temporal Variations.* This is a description of how the acoustical energy varies with respect to time.

c. The subsequent material in this chapter defines the measurement parameters for each of these qualities that are used to evaluate sound and vibration.

B-2. Decibels.

The basic unit of level in acoustics is the "decibel" (abbreviated dB). In acoustics, the term "level" is used to designated that the quantity is referred to some reference value, which is either stated or implied.

a. Definition and use. The decibel (dB), as used in acoustics, is a unit expressing the ratio of two quantities that are proportional to power. The decibel level is equal to 10 times the common logarithm of the power ratio; or

$$dB = 10 \log \frac{P_1}{P_2} \qquad \text{(eq B-1)}$$

In this equation P2 is the absolute value of the power under evaluation and P1 is an absolute value of a power reference quantity with the same units. If the power P1 is the accepted standard reference value, the decibels are standardized to that reference value. In acoustics, the decibel is used to quantify sound pressure levels that people hear, sound power levels radiated by sound sources, the sound transmission loss through a wall, and in other uses, such as simply "a noise reduction of 15 dB" (a reduction relative to the original sound level condition). Decibels are always related to logarithms to the base 10, so the notation 10 is usually omitted. It is important to realize that the decibel is in reality a dimensionless quantity (somewhat analogous to "percent"). Therefore when using decibel levels, reference needs to be made to the quantity under evaluation and the reference level. It is also instructive to note that the decibel level is primarily determined by the magnitude of the absolute value of the power level. That is, if the magnitude of two different power levels differ by a factor of 100 then the decibel levels differ by 20 dB.

b. Decibel addition. In many cases cumulative effects of multiple acoustical sources have to be evaluated. In this case the individual sound levels should be summed. Decibel levels are added logarithmically and not algebraically. For example, 70 dB plus 70 dB does not equal 140 dB, but only 73 dB. A very simple, but usually adequate, schedule for obtaining the sum of two decibel values is:

When two decibel values differ by	Add the following amount to the higher value
0 or 1 dB	3 dB
2 or 3 dB	2 dB
4 to 9 dB	1 dB
10 dB or more	0 dB

When several decibel values to be added equation B-2 should be used.

$$L_{sum} = 10 \log \left[10^{\frac{L_{p1}}{10}} + 10^{\frac{L_{p2}}{10}} + \ldots + 10^{\frac{L_{pn}}{10}} \right] \qquad \text{(eq B-2)}$$

In the special case where decibel levels of equal magnitudes are to be added, the cumulative level can be determined with equation B-3.

$$L_{sum} = L_p + 10 \log (n) \qquad \text{(eq B-3}$$

where n is the number of sources, all with magnitude Lp.

c. Decibel subtraction. In some case it is necessary to subtract decibel levels. For example if the cumulative level of several sources are known, what would the cumulative level be if one of the sources were reduce? Decibel subtraction is given by equation B-4.

$$L_{diff}=10 \log \left[10^{\frac{L_{p1}}{10}} - 10^{\frac{L_{p2}}{10}}\right] \quad \text{(eq B-4)}$$

d. Decibel averaging. Strictly speaking decibels should be averaged logarithmatically not arithmetically. Equation B-5 should be used for decibel averaging.

$$L_{avg}=10 \log \left[\frac{10^{\frac{L_{p1}}{10}} + 10^{\frac{L_{p2}}{10}} + \ldots + 10^{\frac{L_{pn}}{10}}}{n}\right] \quad \text{(eq B–5)}$$

B-3. Sound Pressure level (Lp or SPL).

The ear responds to sound pressure. Sound waves represent tiny oscillations of pressure just above and below atmospheric pressure. These pressure oscillations impinge on the ear, and sound is heard. A sound level meter is also sensitive to sound pressure.

a. Definition, sound pressure level. The sound pressure level (in decibels) is defined by:

$$L_p=10 \log \left[\left(\frac{p}{p_{ref}}\right)^2\right] \quad \text{(eq B-6)}$$

Where p is the absolute level of the sound pressure and pref is the reference pressure. Unless otherwise stated the pressure, p, is the effective root mean square (rms) sound pressure. This equation is also written as:

$$L_p=20 \log \left[\left(\frac{p}{p_{ref}}\right)\right] \quad \text{(eq B-7)}$$

Although both formulas are correct, it is instructive to consider sound pressure level as the log of the pressure squared (formula B-6). This is because when combining sound pressure levels, in almost all cases, it is the square of the pressure ratios (i.e. $\{p/_{Pref})2\}$'s) that should be summed not the pressure ratios (i.e. not the $\{p/_{Pref}\}$'s). This is also true for sound pressure level subtraction and averaging.

b. Definition, reference pressure. Sound pressure level, expressed in decibels, is the logarithmic ratio of pressures where the reference pressure is 20 micropascal or 20 uPa (Pascal, the unit of pressure, equals 1 Newton/m^2). This reference pressure represents approximately the faintest sound that can be heard by a young, sensitive, undamaged human ear when the sound occurs in the frequency region of maximum hearing sensitivity, about 1000 Hertz (Hz). A 20 uPa pressure is 0 dB on the sound pressure level scale. In the strictest sense, a sound pressure level should be stated completely, including the reference pressure base, such as "85 decibels relative to 20 uPa." However, in normal practice and in this manual the reference pressure is omitted, but it is nevertheless implied.

c. Abbreviations. The abbreviation SPL is often used to represent sound pressure level, and the notation Lp is normally used in equations, both in this manual and in the general acoustics -literature.

d. Limitations on the use of sound pressure levels. Sound pressure levels can be used for evaluating the effects of sound with respect to sound level criteria. Sound pressure level data taken under certain installation conditions cannot be used to predict sound pressure levels under other installation conditions unless modifications are applied. Implicit in these modifications is a sound power level calculation.

B-4. Sound power level. (Lw or PWL)

Sound power level is an absolute measure of the quantity of acoustical energy produced by a sound source. Sound power is not audible like sound pressure. However they are related (see section B-6). It is the manner in which the sound power is radiated and distributed that determines the sound pressure level at a specified location. The sound power level, when correctly determined, is an indication of the sound radiated by the source and is independent of the room containing the source. The sound power level data can be used to compare sound data submittals more accurately and to estimate sound pressure levels for a variety of room conditions. Thus, there is technical need for the generally higher quality sound power level data.

a. Definition, sound power level. The sound power level (in decibels) is defined by:

$$L_w=10 \log \frac{P}{p_{ref}} \quad \text{(eq B-8)}$$

Where P is the absolute level of the sound power and Pref is the reference power. Unless otherwise stated the power, P, is the effective root mean square (rms) sound power.

b. Definition, reference power. Sound power level, expressed in decibels, is the logarithmic ratio of the sound power of a source in watts (W)

relative to the sound power reference base of 10^{-12} W. Before the US joined the IS0 in acoustics terminology, the reference power in this country was 10^{-13}W, so it is important in using old data (earlier than about 1963) to ascertain the power level base that was used. If the sound power level value is expressed in dB relative to 10^{-13}W, it can be converted to dB relative to 10^{-12}W, by subtracting 10 dB from the value. Special care must be used not to confuse decibels of sound pressure with decibels of sound power. It is often recommended that power level values always be followed by the notation "dB re 10^{-12}W." However, in this manual this notation is omitted, although it will always be made clear when sound power levels are used.

c. Abbreviations. The abbreviation PWL is often used to represent sound power level, and the notation Lw normally used in equations involving power level. This custom is followed in the manual.

d. Limitations of sound power level data. There are two notable limitations regarding sound power level data: Sound power can not be measured directly but are calculated from sound pressure level data, and the directivity characteristics of a source are not necessarily determined when the sound power level data are obtained.

(1) *PWL calculated, not measured.* Under the first of these limitations, accurate measurements and calculations are possible, but nevertheless there is no simple measuring instrument that reads directly the sound power level value. The procedures involve either comparative sound pressure level measurements between a so-called standard sound source and the source under test (i.e. the "substitution method"), or very careful acoustic qualifications of the test room in which the sound pressure levels of the source are measured. Either of these procedures can be involved and requires quality equipment and knowledgeable personnel. However, when the measurements are carried out properly, the resulting sound power level data generally are more reliable than most ordinary sound pressure level data.

(2) *Loss of directionality characteristics.* Technically, the measurement of sound power level takes into account the fact that different amounts of sound radiate in different directions from the source, but when the measurements are made in a reverberant or semireverberant room, the actual directionality pattern of the radiated sound is not obtained. If directivity data are desired, measurements must be made either outdoors, in a totally anechoic test room where reflected sound cannot distort the sound radiation pattern, or in some instances by using sound intensity measurement techniques. This restriction applies equally to both sound pressure and sound power measurements.

B-5. Sound Intensity level (Li)

Sound intensity is sound power per unit area. Sound intensity, like sound power, is not audible. It is the sound intensity that directly relates sound power to sound pressure. Strictly speaking, sound intensity is the average flow of sound energy through a unit area in a sound field. Sound intensity is also a vector quantity, that is, it has both a magnitude and direction. Like sound power, sound intensity is not directly measurable, but sound intensity can be obtained from sound pressure measurements.

a. Definition, Sound Intensity Level. The sound intensity level (in decibels) is defined by:

$$L_i = 10 \log \frac{I}{I_{ref}} \qquad \text{(eq B-9)}$$

Where I is the absolute level of the sound intensity and Iref is the reference intensity. Unless otherwise stated the intensity, I, is the effective root mean square (rms) sound intensity.

b. Definition, reference intensity. Sound intensity level, expressed in decibels, is the logarithmic ratio of the sound intensity of at a location, in watts/square meter (W/m^2) relative to the sound power reference base of $10^{-12}W/m^2$.

c. Notation. The abbreviation Li is often used to represent sound intensity level. The use of IL as an abbreviation is not recommended since this is often the same abbreviation for "Insertion Loss" and can lead to confusion.

d. Computation of Sound power level from intensity level. The conversion between sound intensity level (in dB) and sound power level (in dB) is as follows:

$$L_w = 10 \log \left[A\left(\frac{I}{I_{ref}}\right)\right] \qquad \text{(eq B-10)}$$

where A is the area over which the average intensity is determined in square meters (m^2). Note this can also be written as:

$$L_w = L_i + 10 \log\{A\} \qquad \text{(eq B-11)}$$

if A is in English units (sq. ft.) then equation B-11 can be written as:

$$L_w = L_i + 10 \log\{A\} - 10 \qquad \text{(eq B-12)}$$

Note, that if the area A completely closes the sound source, these equations can provide the total sound power level of the source. However care must be taken to ensure that the intensity used is representative of the total area. This can be done

by using an area weighted intensity or by logarithmically combining individual Lw's.

e. Determination of Sound intensity. Although sound intensity cannot be measured directly, a reasonable approximation can be made if the direction of the energy flow can be determined. Under free field conditions where the energy flow direction is predictable (outdoors for example) the magnitude of the sound pressure level (L_p) is equivalent to the magnitude of the intensity level (L_i). This results because, under these conditions, the intensity (I) is directly proportional to the square of the sound pressure (p^2). This is the key to the relationship between sound pressure level and sound power level. This is also the reason that when two sounds combine the resulting sound level is proportional to the log of the sum of the squared pressures (i.e. the sum of the p^2's) not the sum of the pressures (i.e. not the sum of the p's). That is, when two sounds combine it is the intensities that add, not the pressures. Recent advances in measurement and computational techniques have resulted in equipment that determine sound intensity directly, both magnitude and direction. Using this instrumentation sound intensity measurements can be conducted in more complicated environments, where fee field conditions do not exist and the relationship between intensity and pressure is not as direct.

B-6. Vibration Levels

Vibration levels are analogous to sound pressure levels.

a. Definition, vibration level. The vibration level (in decibels) is defined by:

$$L_a = 10 \log \left[\left(\frac{a}{a_{ref}} \right)^2 \right] \qquad \text{(eq B-13)}$$

Where a is the absolute level of the vibration and aref is the reference vibration. In the past different measures of the vibration amplitude have been utilized, these include, peak-to-peak (p-p), peak (p), average and root mean square (rms) amplitude. Unless otherwise stated the vibration amplitude, a, is the root mean square (rms). For simple harmonic motion these amplitudes can be related by:

rms value	=	0.707 x peak
average value	=	0.637 x peak
rms value	=	1.11 x average
peak-to peak	=	2 x peak

In addition vibration can be measured with three different quantities, these are, acceleration, velocity and displacement. Unless otherwise stated the vibration levels used in this manual are in terms of acceleration and are called "acceleration levels". For simple harmonic vibration at a single frequency the velocity and displacement can be related to acceleration by:

velocity	=	acceleration/$(2\pi f)$
displacement	=	acceleration/$\{(2\pi f)^2\}$

Where f is the frequency of the vibration in hertz (cycles per second). For narrow bands and octave bands, the same relationship is approximately true where f is the band center frequency in hertz.

b. Definition, reference vibration. In this manual, the acceleration level, expressed in decibels, is the logarithmic ratio of acceleration magnitudes where the reference acceleration is 1 micro G (10-6), where G is the acceleration of gravity (32.16 ft/sec^2 or 9.80 m/s^2). It should be noted that other reference acceleration levels are in common use, these include, 1 micro m/s^2,10 micro m/s^2 (approximately equal to 1 micro G) and 1 G. Therefore when stating an acceleration level it is customary to state the reference level, such as "60 dB relative to 1 micro G".

c. Abbreviations. The abbreviation VAL is sometimes used to represent vibration acceleration level, and the notation La is normally used in equations, both in this manual and in the general acoustics literature.

B-7. Frequency.

Frequency is analogous to "pitch." The normal frequency range of hearing for most people extends from a low frequency of about 20 to 50 Hz (a "rumbling" sound) up to a high frequency of about 10,000 to 15,000 Hz (a "hissy" sound) or even higher for some people. Frequency characteristics are important for the following four reasons: People have different hearing sensitivity to different frequencies of sound (generally, people hear better in the upper frequency region of about 500-5000 Hz and are therefore more annoyed by loud sounds in this frequency region); high-frequency sounds of high intensity and long duration contribute to hearing loss; different pieces of electrical and mechanical equipment produce different amounts of low-, middle-, and high-frequency noise; and noise control materials and treatments vary in their effectiveness as a function of frequency (usually, low frequency noise is more difficult to control; most treatments perform better at high frequency).

a. Frequency unit, hertz, Hz. When a piano string vibrates 400 times per second, its frequency is 400 vibrations per second or 400 Hz. Before the US joined the IS0 in standardization of many technical terms (about 1963), this unit was known as "cycles per second."

b. Discrete frequencies, tonal components. When an electrical or mechanical device operates at a constant speed and has some repetitive mechanism that produces a strong sound, that sound may be concentrated at the principal frequency of operation of the device. Examples are: the blade passage frequency of a fan or propeller, the gear-tooth contact frequency of a gear or timing belt, the whining frequencies of a motor, the firing rate of an internal combustion engine, the impeller blade frequency of a pump or compressor, and the hum of a transformer. These frequencies are designated "discrete frequencies" or "pure tones" when the sounds are clearly tonal in character, and their frequency is usually calculable. The principal frequency is known as the "fundamental," and most such sounds also contain many "harmonics" of the fundamental. The harmonics are multiple of the fundamental frequency, i.e., 2, 3, 4, 5, etc. times the fundamental. For example, in a gear train, where gear tooth contacts occur at the rate of 200 per second, the fundamental frequency would be 200 Hz, and it is very probable that the gear would also generate sounds at 400, 600, 800, 1000, 1200 Hz and so on for possible 10 to 15 harmonics. Considerable sound energy is often concentrated at these discrete frequencies, and these sounds are more noticeable and sometimes more annoying because of their presence. Discrete frequencies can be located and identified within a general background of broadband noise (noise that has all frequencies present, such as the roar of a jet aircraft or the water noise in a cooling tower or waterfall) with the use of narrowband filters that can be swept through the full frequency range of interest.

c. Octave frequency bands. Typically, a piece of mechanical equipment, such as a diesel engine, a fan, or a cooling tower, generates and radiates some noise over the entire audible range of hearing. The amount and frequency distribution of the total noise is determined by measuring it with an octave band analyzer, which is a set of contiguous filters covering essentially the full frequency range of human hearing. Each filter has a bandwidth of one octave, and nine such filters cover the range of interest for most noise problems. The standard octave frequencies are given in table B-l. An octave represents a frequency interval of a factor of two. The first column of table B-l gives the band width frequencies and the second column gives the geometric mean frequencies of the bands. The latter values are the frequencies that are used to label the various octave bands. For example, the 1000-Hz octave band contains all the noise falling between 707 Hz (1000/square root of 2) and 1414 Hz (1000 X square root of 2). The frequency characteristics of these filters have been standardized by agreement (ANSI S1.11 and ANSI S1.6). In some instances reference is made to "low", "mid" and "high" frequency sound. This distinction is somewhat arbitrary, but for the purposes of this manual low frequency sound includes the 31 through 125 Hz octave bands, mid frequency sound includes the 250 through 1,000 Hz octave bands, and high frequency sound includes the 2,000 through 8,000 Hz octave band sound levels. For finer resolution of data, narrower bandwidth filters are sometimes used; for example, finer constant percentage bandwidth filters (e.g. half-octave, third-octave, and tenth-octave filters), and constant width filters (e.g. 1 Hz, 10 Hz, etc.). The spectral information presented in this manual in terms of full octave bands. This has been found to be a sufficient resolution for most engineering considerations. Most laboratory test data is obtained and presented in terms of 1/3 octave bands. A reasonably approximate conversion from 1/3 to full octave bands can be made (see d. below). In certain cases the octave band is referred to as a "full octave" or "1/1 octave" to differentiate it from partial octaves such as the 1/3 or 1/2 octave bands. The term "overall" is used to designate the total noise without any filtering.

d. Octave band levels (1/3). Each octave band can be further divided into three 1/3 octave bands. Laboratory data for sound pressure, sound power and sound intensity levels may be given in terms of 1/3 octave band levels. The corresponding octave band level can be determined by adding the levels of the three 1/3 octave bands using equation B-2. There is no method of determining the 1/3 octave band levels from octave band data. However as an estimate one can assume that the 1/3 octave levels are approximately 4.8 dB less than the octave band level. Laboratory data for sound transmission loss is commonly given in terms of 1/3 octave band transmission losses. To convert from 1/3 octave band transmission losses to octave band transmission losses use equation B-14.

$$TL_{ob} = 4.77 - 10 \log \left[10^{\frac{-TL_1}{10}} + 10^{\frac{-TL_2}{10}} + 10^{\frac{-TL_3}{10}} \right] \quad \text{(eq B-14)}$$

Table B-1. Bandwidth and Geometric Mean Frequency of Standard Octave and 1/3 Octave Bands.

Frequency, Hz					
Octave			One-third octave		
Lower band limit	Center	Upper band limit	Lower band limit	Center	Upper band limit
11	16	22	14.1	16	17.8
			17.8	20	22.4
			22.4	25	28.2
22	31.5	44	28.2	31.5	35.5
			35.5	40	44.7
			44.7	50	56.2
44	63	88	56.2	63	70.8
			70.8	80	89.1
			89.1	100	112
88	125	177	112	125	141
			141	160	178
			178	200	224
177	250	355	224	250	282
			282	315	355
			355	400	447
355	500	710	447	500	562
			562	630	708
			708	800	891
710	1,000	1,420	891	1,000	1,122
			1,122	1,250	1,413
			1,413	1,600	1,778
1,420	2,000	2,840	1,778	2,000	2,239
			2,239	2,500	2,818
			2,818	3,150	3,548
2,840	4,000	5,680	3,548	4,000	4,467
			4,467	5,000	5,623
			5,623	6,300	7,079
5,680	8,000	11,360	7,079	8,000	8.913
			8,913	10,000	11,220
			11,220	12,500	14,130
11,360	16,000	22,720	14,130	16,000	17,780
			17,780	20,000	22,390

Where TLob is the resulting octave band transmission loss and TL_1, TL_2 & TL_3 are the 1/3 octave band transmission losses.

e. A-, B- & C-weighted sound levels. Sound level meters are usually equipped with "weighting circuits" that tend to represent the frequency characteristics of the average human ear for various sound intensities. The frequency characteristics of the A-, B-, and C-weighting networks are shown in figured B-2. The relative frequency response of the average ear approximates the A curve when sound pressure levels of about 20 to 30 dB are heard. For such quiet sounds, the ear has fairly poor sensitivity in the low-frequency region, The B curve represents approximately the frequency response of hearing sensitivity for sounds having 60- to 70-dB sound pressure level, and the C curve shows the almost flat frequency response of the ear for loud sounds in the range of about 90 to 100 dB. Annoyance usually occurs when an unwanted noise intrudes into an otherwise generally quiet environment. At such times, the ear is listening with a sensitivity resembling the A curve. Thus, judgment tests are often carried out on the loudness, noisiness, annoyance, or intrusiveness of a sound or noise related to the A-weighted sound level of that sound. The correlation is generally quite good, and it is a generally accepted fact that the high-frequency noise determined from the A-weighted sound level is a good indicator of the annoyance capability of a noise. Thus, noise codes and community noise ordinances are often written around A-weighted sound levels. For example: "The sound level at the property line between a manufacturing or industrial plant and a residential community must not exceed 65 dB(A) during daytime or 55 dB(A) during nighttime." Of course, other sound levels and other details might appear in a more complete noise code. Sound levels taken on the A-, B-, and C-weighted networks have usually been designated by dB(A), dB(B), and dB(C), respectively. The parentheses are sometimes omitted, as in dBA. The weighting networks, in effect, discard some of the sound, so it is conventional not to refer to their values as sound pressure levels, but only as sound levels-as in "an A-weighted sound level of 76 dB(A)." High-intensity, high-frequency sound is known to contribute to hearing loss, so the A-weighted sound level is also used as a means of monitoring factory noise for the hearing damage potential. It is very important, when reading or reporting sound levels, to identify positively the weighting network used, as the sound levels can be quite different depending on the frequency content of the noise measured. In some cases if no weighting is specified, A-weighting will be assumed. This is very poor practice and should be discouraged.

f. Calculation of A-weighted sound level. For analytical or diagnostic purposes, octave band analyses of noise data are much more useful than sound levels from only the weighting networks. It is always possible to calculate, with a reasonable degree of accuracy, an A-weighted sound level

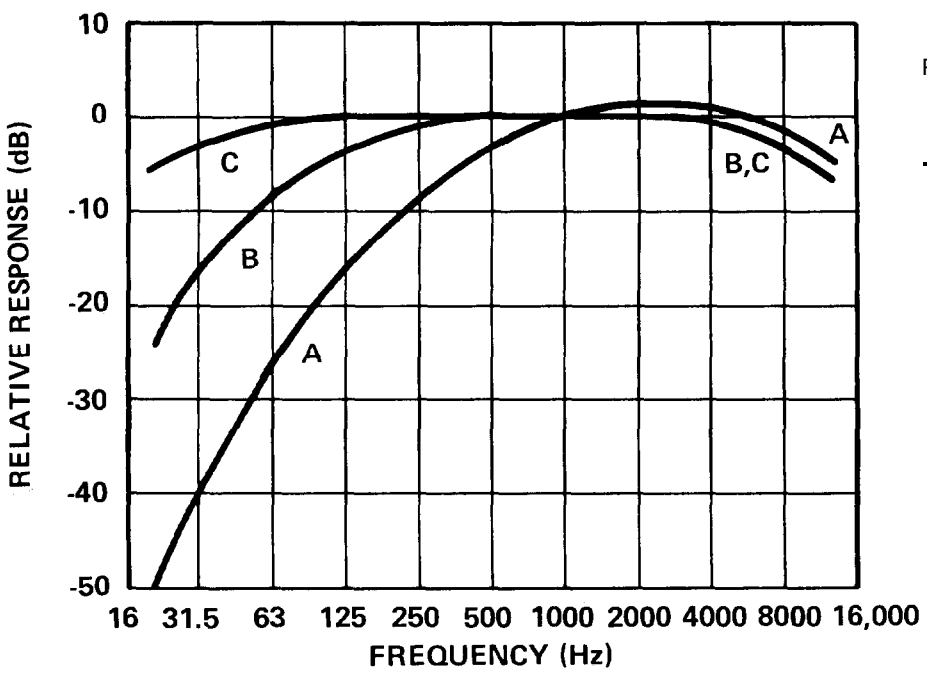

OCTAVE FREQUENCY BAND (Hz)	A-WEIGHTED FILTER RESPONSE (dB)
31	-39
63	-26
125	-16
250	-9
500	-3
1000	0
2000	+1
4000	+1
8000	-1

Figure B-1. Approximate Electrical Frequency Response of The A-, B-, and C-weighted Networks of Sound Level Meters.

from octave band levels. This is done by subtracting the decibel weighting from the octave band levels and then summing the levels logarithamatitally using equation B-2. But it is not possible to determine accurately the detailed frequency content of a noise from only the weighted sound levels. In some instances it is considered advantageous to measure or report A-weighted octave band levels. When this is done the octave band levels should not be presented as "sound levels in dB(A)", but must be labeled as "octave band sound levels with A-weighting", otherwise confusion will result.

B-8. Temporal Variations.

Both the acoustical level and spectral content can vary with respect to time. This can be accounted for in several ways. Sounds with short term variations can be measured using the meter averaging characteristics of the standard sound level meter as defined by ANSI S1.4. Typically two meter averaging characteristics are provided, these are termed "Slow" with a time constant of approximately 1 second and "Fast" with a time constant of approximately 1/8 second. The slow response is useful in estimating the average value of most mechanical equipment noise. The fast response if useful in evaluating the maximum level of sounds which vary widely.

B-9. Speed of sound and Wavelength.

The speed of sound in air is given by equation B-15:

where c is the spped of sound in air in ft./set, and tF is the temperature in degrees Fahrenheit.

$$c = 49.03 \times (460 + t_F)^{1/2} \qquad \text{(eq B-15)}$$

a. Temperature effect. For most normal conditions, the speed of sound in air can be taken as approximately 1120 ft./sec. For an elevated temperature of about 1000 deg. F, as in the hot exhaust of a gas turbine engine, the speed of sound will be approximately 1870 ft./sec. This higher speed becomes significant for engine muffler designs, as will be noted in the following paragraph.

b. Wavelength. The wavelength of sound in air is given by equation B-16.

$$\lambda = c/f \qquad \text{(eq B-16)}$$

where {SYMBOL 108/f"Symbol"} is the wavelength in ft., c is the speed of sound in air in ft./sec, and f is the frequency of the sound in Hz. Over the frequency range of 50 Hz to 12,000 Hz, the wavelength of sound in air at normal temperature varies from 22 feet to 1.1 inches, a relatively large spread. The significance of this spread is that many acoustical materials perform well when their dimensions are comparable to or larger than the wavelength of sound. Thus, a l-inch thickness of acoustical ceiling tile applied directly to a wall is quite effective in absorbing high-frequency sound, but is of little value in absorbing low-frequency sound. At room temperature, a lo-feet-long dissipative muffler is about 9 wavelengths long for sound at 1000 Hz and is therefore quite effective, but is only about 0.4 wavelength long at 50 Hz and is therefore not very effective. At an elevated exhaust temperature of 1000 deg. F, the wavelength of sound is about 2/3 greater than at room temperature, so the length of a corresponding muffler should be about 2/3 longer in order to be as effective as one at room temperature. In the design of noise control treatments and the selection of noise control materials, the acoustical performance will frequently be found to relate to the dimensions of the treatment compared to the wavelengths of sound. This is the basic reason why it is generally easier and less expensive to achieve high-frequency noise control (short wavelengths) and more difficult and expensive to achieve low-frequency noise control (long wavelengths).

B-10. Loudness.

The ear has a wide dynamic range. At the low end of the range, one can hear very faint sounds of about 0 to 10 dB sound pressure level. At the upper end of the range, one can hear with clarity and discrimination loud sounds of 100-dB sound pressure level, whose actual sound pressures are 100,000 times greater than those of the faintest sounds. People may hear even louder sounds, but in the interest of hearing conservation, exposure to very loud sounds for significant periods of time should be avoided. It is largely because of this very wide dynamic range that the logarithmic decibel system is useful; it permits compression of large spreads in sound power and pressure into a more practical and manageable numerical system. For example, a commercial jet airliner produced 100,000,000,000 (= 10^{11}) times the sound power of a cricket. In the decibel system, the sound power of the jet is 110 dB greater than that of the cricket (110 = 10 log 10^{11}). Humans judge subjective loudness on a still more compressed scale.

a. Loudness judgments. Under controlled listening tests, humans judge that a 10 dB change in sound pressure level, on the average, represents approximately a halving or a doubling of the loudness of a sound. Yet a 10-dB reduction in a sound source means that 90 percent of the radiated sound energy has been eliminated. Table B-2 shows the approximate relationship between sound

Table B–2. Relationship Between Changes in Sound Level, Acoustic Energy Loss, and Approximate Relative Loudness of a Sound.

Sound Level Change	Acoustic Energy Loss	Relative Loudness
0 dB	0	Reference
-3 dB	50%	Perceptible change
-10 dB	90%	Half as loud
-20 dB	99%	1/4 as loud
-30 dB	99.9%	1/8 as loud
-40 dB	99.99%	1/16 as loud

level changes, the resulting loss in acoustic power, and the judgment of relative loudness of the changes. Toward the bottom of the table, it becomes clear that tremendous portions of the sound power must be eliminated to achieve impressive amounts of noise reduction in terms of perceived loudness.

b. Sones and phons. Sones and phons are units used in calculating the relative loudness of sounds. Sones are calculated from nomograms that interrelate sound pressure levels and frequency, and phons are the summation of the sones by a special addition procedure. The results are used in judging the relative loudness of sounds, as in "a 50-phon motorcycle would be judged louder than a 40-phon motorcycle." When the values are reduced to phon ratings, the frequency characteristics and the sound pressure level data have become detached, and the noise control analyst or engineer has no concrete data for designing noise control treatments. Sones and phons are not used in this manual, and their use for noise control purposes is of little value. When offered data in sones and phons, the noise control engineer should request the original octave or 1/3 octave band sound pressure level data, from which the sones and phons were calculated.

B-11. Vibration Transmissibility.

A transmissibility curve is often used to indicate the general behavior of a vibration-isolated system. Transmissibility is roughly defined as the ratio of the force transmitted through the isolated system to the supporting structure to the driving force exerted by the piece of vibrating equipment. Figure B-2 is the transmissibility curve of a simple undamped single-degree-of-freedom system. The forcing frequency is usually the lowest driving frequency of the vibrating system. For an 1800-rpm pump, for example, the lowest driving frequency is 1800/60 = 30 Hz. The natural frequency, in figure B-2, is the natural frequency of the isolator mount when loaded. An isolator mount might be an array of steel springs, neoprene-in-shear mounts, or pads of compressed glass fiber or layers of ribbed or waffle-pattern neoprene pads. When the ratio of the driving frequency to the natural frequency is less than about 1.4, the transmissibility goes above 1, which is the same as not having any vibration isolator. When the ratio of frequencies equals 1, that is, when the natural frequency of the mount coincides with the driving frequency of the equipment, the system may go into violent oscillation, to the point of damage or danger, unless the system is restrained by a damping or snubbing mechanism. Usually, the driver (the operating equipment) moves so quickly through this unique speed condition that there is no danger, but for large, heavy equipment that builds up speed slowly or runs downs slowly, this is a special problem that must be handled. At higher driving speeds, the ratio of frequencies exceeds 1.4 and the mounting system begins to provide vibration isolation, that is, to reduce the force reduce the force transmitted into the floor or other supported structure. The larger the ratio of frequencies, the more effective the isolation mount.

a. Isolation efficiency. An isolation mounting system that has a calculated transmissibility, say, of 0.05 on figure B-2 is often described as having an "isolation efficiency" of 95 percent. A transmissibility of 0.02 corresponds to 98 percent isolation efficiency, and so on. Strict interpretation of transmissibility data and isolation efficiencies, however, must be adjusted for real-life situations.

b. Transmissibility limitations. The transmissibility curve implies that the mounted equipment (i.e. equipment plus the isolators) are supported by a structure that is infinitely massive and infinitely rigid. In most situations, this condition is not met. For example, the deflection of a concrete floor slab

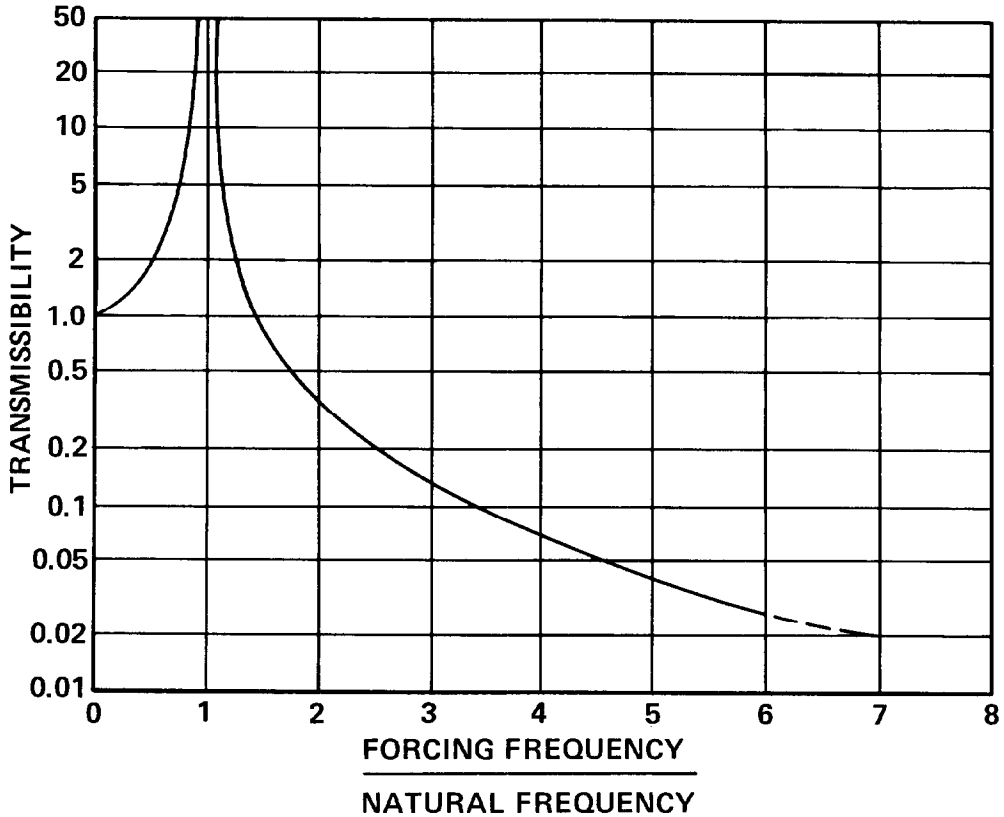

Figure B-2. Transmissibility of a Simple Undamped Single Degree-of-Freedom System.

under static load may fall in the range of 1/4 inch to 1/2 inch. This does not qualify as being infinitely rigid. The isolation efficiency is reduced as the static floor deflection increases. Therefore, the transmissibility values of figure B-2 should not be expected for any specific ratio of driving frequency to natural frequency.

(1) *Adjustment for floor deflection.* In effect, the natural frequency of the isolation system must be made lower or the ratio of the two frequencies made higher to compensate for the resilience of the floor. This fact is especially true for upper floors of a building and is even applicable to floor slabs poured on grade (where the earth under the slab acts as a spring). Only when equipment bases are supported on large extensive portions of bedrock can the transmissibility curve be applied directly.

(2) *Adjustment for floor span.* This interpretation of the transmissibility curve is also applied to floor structures having different column spacings. Usually, floors that have large column spacing, such as 50 to 60 feet, will have larger deflections that floors of shorter column-spacing, such as 20 to 30 feet. To compensate, the natural frequency of the mounting system is usually made lower as the floor span increases. All of these factors are incorporated into the vibration isolation recommendations in this chapter.

(3) *Difficulty of field measurement.* In field situations, the transmissibility of a mounting system is not easy to measure and check against a specification. Yet the concept of transmissibility is at the heart of vibration isolation and should not be discarded because of the above weakness. The material that follows is based on the valuable features of the transmissibility concept, but added to it are some practical suggestions.

B-12. Vibration Isolation Effectiveness.

With the transmissibility curve as a guide, three steps are added to arrive at a fairly practical approach toward estimating the expected effectiveness of an isolation mount.

a. Static deflection of a mounting system. The static deflection of a mount is simply the difference between the free-standing height of the uncompressed, unloaded isolator and the height of the compressed isolator under its static load. This difference is easily measured in the field or estimated from the manufacturer's catalog data. An uncompressed 6 inch high steel spring that has a compressed height of only 4 inches when installed under a fan or pump is said to have a static deflection of 2 inches. Static deflection data are usually given in the catalogs of the isolator manufacturers or distributors. The data may be given in

the form of "stiffness" values. For example, a stiffness of 400 lb/in. means that a 400 lb load will produce a 1 inch static deflection, or that an 800 lb load will produce a 2 inch deflection, assuming that the mount has freedom to deflect a full 2 inches.

b. Natural frequency of a mount. The natural frequency of steel springs and most other vibration isolation materials can be calculated approximately from the formula in equation B-17.

$$f_n = 3.13 \times \sqrt{\frac{1}{SD}} \qquad \text{(eq B-17)}$$

where fn is the natural frequency in Hz and S.D. is the static deflection of the mount in inches.

(1) *Example, steel spring.* Suppose a steel spring has a static deflection of 1 inch when placed under one corner of a motor-pump base. The natural frequency of the mount is approximately:

$$f_n = 3.13 \times \sqrt{\frac{1}{1}} = 3/13 \text{ Hz} \qquad \text{(eq B-17)}$$

(2) *Example, rubber pad.* Suppose a layer of 3/8-inch-thick ribbed neoprene is used to vibration isolate high-frequency structure borne noise or vibration. Under load, the pad is compressed enough to have a 1/16-inch static deflection. The natural frequency of the mount is approximately:

$$f_n = 3.13 \times \sqrt{\frac{1}{\left(\frac{1}{16}\right)}}$$

$$= 3.13 \times \sqrt{16}$$

$$= 3.13 \times 4 = 12 \text{ Hz}$$

This formula usually has an accuracy to within about plus or minus 20 percent for material such as neoprene-in-shear, ribbed or waffle-pattern neoprene pads, blocks of compressed glass fiber, and even pads of cork and felt when operating in their proper load range.

c. Application suggestions. Table B-3 provides a suggested schedule for achieving various degrees of vibration isolation in normal construction. The table is based on the transmissibility curve, but suggests operating ranges of the ratio of driving frequency to natural frequency. The terms "low," "fair," and "high" are merely word descriptors, but they are more meaningful than such terms as 95 or 98 percent isolation efficiency which are clearly erroneous when they do not take into account the mass and stiffness of the floor slab. Vibration control recommendations given in this chapter are based on the application of this table.

(1) *Example.* Suppose an 1800-rpm motor-pump unit is mounted on steel springs having l-inch static deflection (as in the example under b(1) above). The driving frequency of the system is the shaft speed, 1800 rpm or 30 Hz. The natural frequency of the mount is 3 Hz, and the ratio of driving frequency to natural frequency is about 10. Table B-3 shows that this would provide a "fair" to "high" degree of vibration isolation of the motor pump at 30 Hz. If the pump impeller has **10** blades, for example, this driving frequency would be 300 Hz, and the ratio of driving to natural frequencies would be about 100; so the isolator would clearly give a "high" degree of vibration isolation for impeller blade frequency.

(2) *Caution.* The suggestion on vibration isolation offered in the manual are based on experiences with satisfactory installations of conventional electrical and mechanical HVAC equipment in buildings. The concepts and recommendations described here may not be suitable for complex machinery, with unusual vibration modes, mounted on complex isolation systems. For such problems, assistance should be sought from a vibration specialist.

Table B-3. Suggested Schedule for Estimating Relative Vibration Isolation Effectiveness of a Mounting System.

Ratio of Driving Frequency of Source to Natural Frequency of Mount	Degree of Vibration Isolation
Below 1.4	Amplification
1.4 - 3	Negligible
3 - 6	Low
6 - 10	Fair
Above 10	High

APPENDIX C

SOUND LEVEL DATA FOR MECHANICAL AND ELECTRICAL EQUIPMENT

C-1. Introduction.

This appendix contains sound pressure and sound power data for mechanical equipment commonly found in many commercial buildings. Where possible, the noise data have been correlated with some of the more obvious noise influencing parameters, such as type, speed, power rating, and flow conditions. The noise levels quoted in the manual are suggested for design uses; these noise levels represent approximately the 80 to 90 percentile values. That is, on the basis of these sample sizes, it would be expected that the noise levels of about 80 to 90 percent of a random selection of equipment would be equal to or less than the design values quoted in the manual, or only about 10 to 20 percent of a random selection would exceed these values. This is judged to be a reasonable choice of design values for typical uses. Higher percentile coverage, such as 95 percent, would give increased protection in the acoustic design, but at greater cost in weight and thickness of walls, floors, columns, and beams. On-site power plants driven by reciprocating and gas turbine engines have specific sound and vibration problems, which are considered separately in the manual TM 5-805-9/AFM 88-20/NAVFAC DM-3.14.

C-2. Sound Pressure and Sound Power level Data.

In the collection of data, most noise levels were measured at relatively close-in distances to minimize the influence of the acoustic conditions of the room and the noise interference of other equipment operating in the same area.

a. Normalized conditions for SPL data. Note: All measurements were normalized to a common MER condition by selecting a distance of 3 feet and a Room Constant of 800 ft.2 as representative. SPL data measured at other distances and Room Constants were brought to these normalized conditions by using the procedures of chapter 3 and 5.

b. Sound power level data. For equipment normally located and used outdoors, outdoor measurements were made and sound power level data are given. To use these date, one may procedures of chapter 3 and 5. Usually, more measurements and a more detailed estimate of the measurement conditions were involved in deriving the PWL data, so they are believed to have a slightly higher confidence level than the normalized SPL data.

c. A-weighted sound levels. In the tables and figures that follow, A-weighted sound levels are also given. Where sound pressure levels are given, the A-weighted sound level is in pressure; where sound power levels are given, the A-weighted value is in sound power. A-weighted sound levels are useful for simply comparing the noise output of competitive equipment. For complete analysis of an indoor or outdoor noise problem, however, octave band levels should be used.

d. Manufacturers' noise data. Whenever possible, and especially for new types of equipment, the manufacturer should be asked to provide sound level data on the equipment. If the data show remarkably lower noise output than competitive models or are significantly lower than the data quoted in the manual, the manufacturer should be asked to give guarantees of the noise data and to specify the conditions under which the data were measured and/or computed.

C-3. Packaged Chillers With Reciprocating Compressors.

These units range in size from 15-ton to 200-ton cooling capacity. The noise levels have been reduced to the normalized 3 foot distance from the acoustic center of the assembly. In terms of noise production, the measured compressors are divided into two groups: up to 50 tons and over 50 tons. The suggested 80- to go-percentile noise level estimates are given in figure C-1 and in table C-1 for the two size ranges selected. Although major interest is concentrated here on the compressor component of a refrigeration machine, an electric motor is usually the drive unit for the compressor. The noise levels attributed here to the compressor will encompass the drive motor most of the time, so these values are taken to be applicable to either a reciprocating compressor alone or a motor-driven packaged chiller containing a reciprocating compressor.

C-4. Packaged Chillers With Rotary-Screw Compressors.

The octave band sound pressure levels (at 3 foot distance) believed to represent near-maximum noise levels for rotary-screw compressors are listed in table C- 2. These data apply for the size range of 100- to 300-ton cooling capacity, operating at or near 3600 RPM.

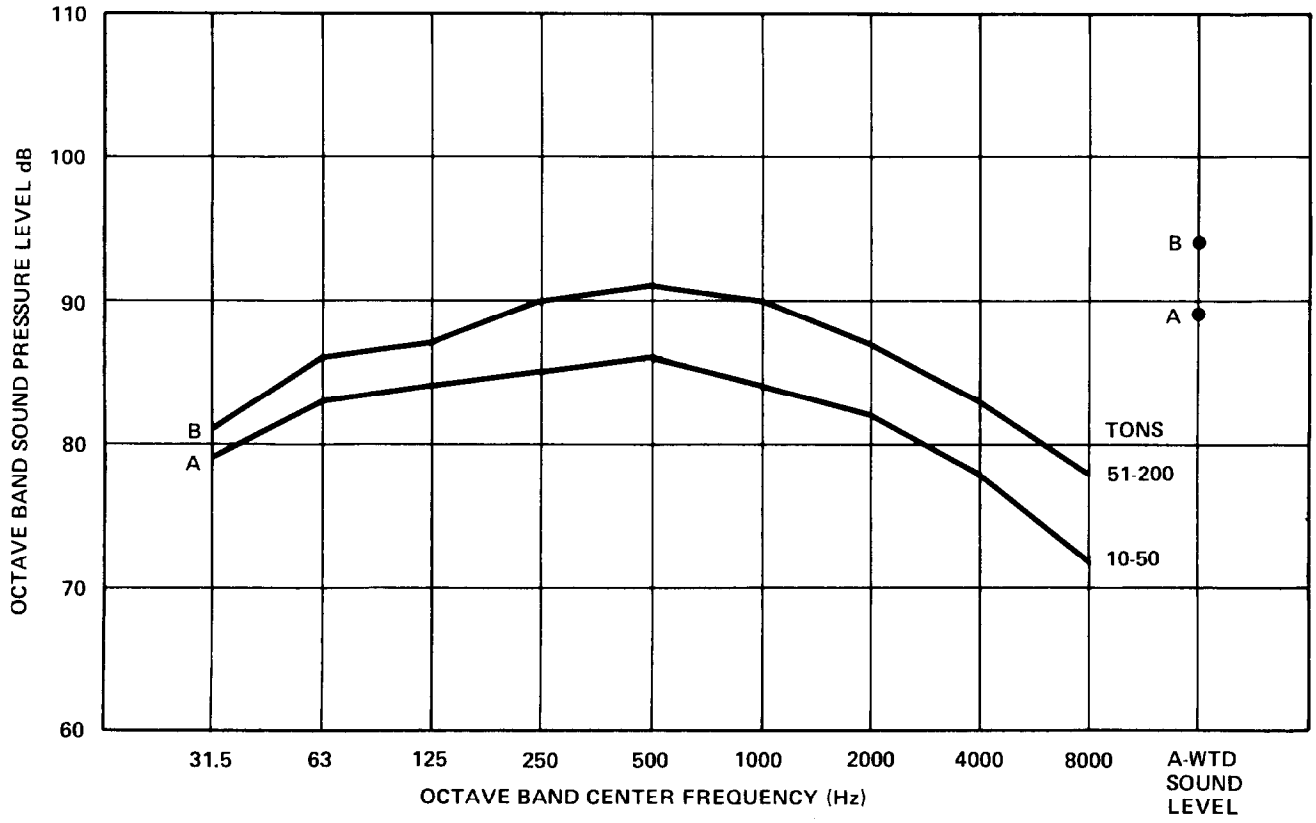

Figure C-1. Sound Pressure Levels of Reciprocating Compressors at 3-ft. Distance.

Table C-l. Sound Pressure levels (in dB at 3-ft. distance) for packaged chillers With Reciprocating Compressors.

Octave Frequency Band (Hz)	Sound Pressure Level, dB	
	10-50 Tons Cooling Capacity	51-200 Tons Cooling Capacity
31	79	81
63	83	86
125	84	87
250	85	90
500	86	91
1000	84	90
2000	82	87
4000	78	83
8000	72	78
A-weighted, dB(A)	89	94

Table C-2. Sound Pressure Levels (in dB at 3-ft. Distance) for Packaged Chillers With Rotary Screw Compressors.

Octave Frequency Band (Hz)	Sound Pressure Level, dB 100-300 Tons Cooling Capacity
31	70
63	76
125	80
250	92
500	89
1000	85
2000	80
4000	75
8000	73
A-weighted, dB(A)	90

C-5. Packaged Chillers With Centrifugal Compressors.

These compressors range in size from 100 tons to 4000 tons and represent the leading manufacturers. The noise levels may be influenced by the motors, gears, or turbines, but the measurement positions are generally selected to emphasize the compressor noise. The noise levels given in figure C-2 and table C-3 represent the 80- to 90-percentile values found when the units were divided into the two size groups: under 500 tons and 500 or more tons. The low-frequency noise levels reflect the increased noise found for off-peak loads for most centrifugal machines. These data may be used for packaged chillers, including their drive units. For built-up assemblies, these data should be used for the centrifugal compressor only and the suggestions of paragraph C-6 followed for combining the noise of other components.

C-6. Built-Up Refrigeration Machines.

The noise of packaged chillers, as presented in the preceding paragraphs, includes the noise of both the compressor and the drive unit. If a refrigeration system is built up of separate pieces, then the noise level estimate should include the noise of

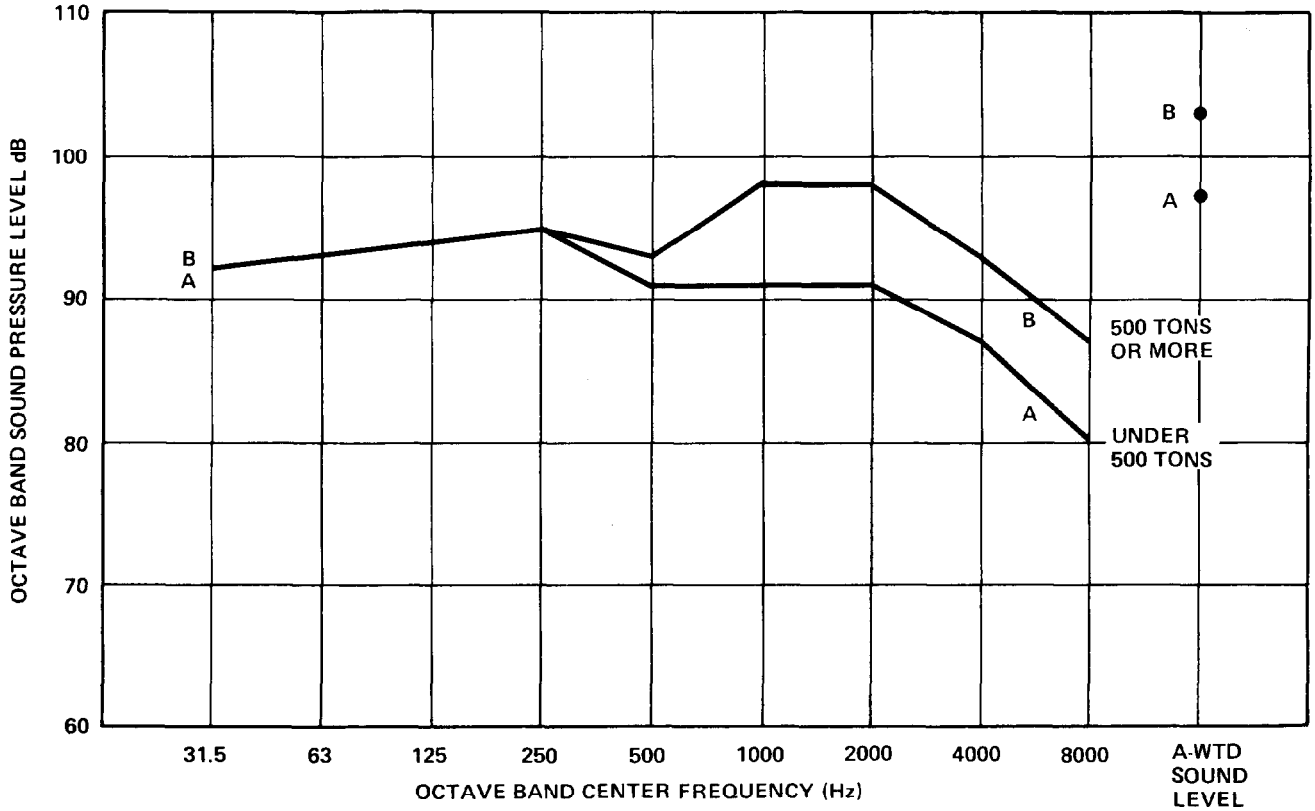

Figure C-2. Sound Pressure Levels of Centrifugal Compressors at 3-ft. Distance.

Table C-3. Sound Pressure Levels (in dB at 3-ft. Distance) for Packaged Chillers With Centrifgal Compressors.

Octave Frequency Band (Hz)	Sound Pressure Level, dB	
	Cooling Capacity Under 500 Tons	Cooling Capacity 500 Tons or More
31	92	92
63	93	93
125	94	94
250	95	95
500	91	93
1000	91	98
2000	91	98
4000	87	93
8000	80	87
A-weighted, dB(A)	97	103

each component making up the assembly. Compressor noise levels should be taken from the packaged chiller data. Sound level data for the drive units (motors, gears, steam turbines) should be taken from the appropriate tables in the manual or obtained from the manufacturers. Decibel addition should be used to determine each octave band sum from the octave band levels of the various components. The acoustic center should be assumed to be at the approximate geometric center of the assembly, and distances should be extrapolated from that point. For very close distances (such as 2 to 3 feet) to each component, assume the total sound levels apply all around the equipment at distances of 3 feet from the approximate geometric centers of each component, although this assumption will not provide exact close-in sound levels.

C-7. Absorption Machines.

These units are normally masked by other noise in a mechanical equipment room. The machine usually includes one or two small pumps; steam flow noise or steam valve noise may also be present. The 3 foot distance SPLs for most absorption machines used in refrigeration systems for buildings are given in table C-4.

C-8. Boilers.

a. Noise data. The estimated noise levels given in table C-5 are believed applicable for all boilers, although some units will exceed these values and, certainly, many units will be much lower than these values. These 3 foot noise levels apply to the front of the boiler, so when other distances are of concern, the distance should always be taken from the front surface of the boiler. Noise levels are much lower off the side and rear of the typical boiler. The wise variety of blower assemblies, air and fuel inlet arrangements, burners, and combustion chambers provides such variability in the noise data that it is impossible simply to correlate noise with heating capacity.

Table C-4. Sound Pressure Levels (in dB at 3-ft. Distance) for Absorption Machines.

Octave Frequency Band (Hz)	Sound Pressure Level, dB All Sizes
31	80
63	82
125	82
250	82
500	82
1000	81
2000	78
4000	75
8000	70
A-weighted, dB(A)	86

Table C-5. Sound Pressure Levels (in dB at 3-ft. Distance From the Front) for Boilers.

Octave Frequency Band (Hz)	Sound Pressure Level, dB 50-2000 BHP
31	90
63	90
125	90
250	87
500	84
1000	82
2000	80
4000	76
8000	70
A-weighted, dB(A)	88

Table C-6. Sound Pressure Levels (in dB at 3-ft. Distance) for High-Pressure Thermally Insulated Steam Valves and Nearby Piping.

Octave Frequency (Hz)	Sound Pressure Level (dB)
31	70
63	70
125	70
250	70
500	75
1000	80
2000	85
4000	90
8000	90
A-weighted, dB(A)	94

b. Boiler rating. Heating capacity of boilers may be expressed in different ways: sq. ft. of heating surface, BTU/hour, lb of steam/hour, or bhp boiler horsepower). To a first approximation, some of these terms are interrelated as follows:

33,500 BTU/hour = 1 bhp

33 lb of steam/hour = 1 bhp.

In the manual, all ratings have been reduced to equivalent bhp.

C-9. Steam Valves

Estimated noise levels are given in table C-6 for a typical thermally insulated steam pipe and valve. Even though the noise is generated near the orifice of the valve, the pipes on either side of the valve radiate a large part of the total noise energy that is radiated. Hence, the pipe is considered, along with the valve, as a part of the noise source. Valve noise is largely determined by valve type and design, pressure and flow conditions, and pipe wall thickness. Some valve manufacturers can provide valve noise estimated for their products.

C-10. Cooling Towers and Evaporative Condensers.

The generalizations drawn here may not apply exactly to all cooling towers and condensers, but the data are useful for laying out cooling towers and their possible noise control treatments. It is desirable to obtain from the manufacturer actual measured noise levels for all directions of interest, but if these data are not forthcoming, it is essential to be able to approximate the directional pattern of the cooling tower noise. For aid in identification, four general types of cooling towers are sketched in figure C-3: A.) The centrifugal-fan blow-through type; B.) The axial-flow blow-through type (with the fan or fans located on a side wall); C.) The induced-draft propeller type; and D.) The "underflow" forced draft propeller type (with the fan located under the assembly).

a. Sound power level data. Sound power level data are given for both propeller-type and centrigual-fan cooling towers.

(1) *Propeller-type cooling tower.* The approximate overall and A-weighted sound power levels of propeller-type cooling towers are given by equations C-1 and C-2, respectively: for overall PWL (propeller-type),

$$Lw = 95 + 10 \log (\text{fan hp}), \qquad \text{(eq C-1)}$$

and for A-weighted PWL,

$$Lw_a = 86 + 10 \log (\text{fan hp}), \qquad \text{(eq C-2)}$$

where "fan hp" is the nameplate horsepower rating of the motor that drives the fan. Octave band PWLs can be obtained by subtracting the values of table C-7 from the overall PWL.

(2) *Centrifugal fan cooling tower.* The approximate overall and A-weighted sound power levels of

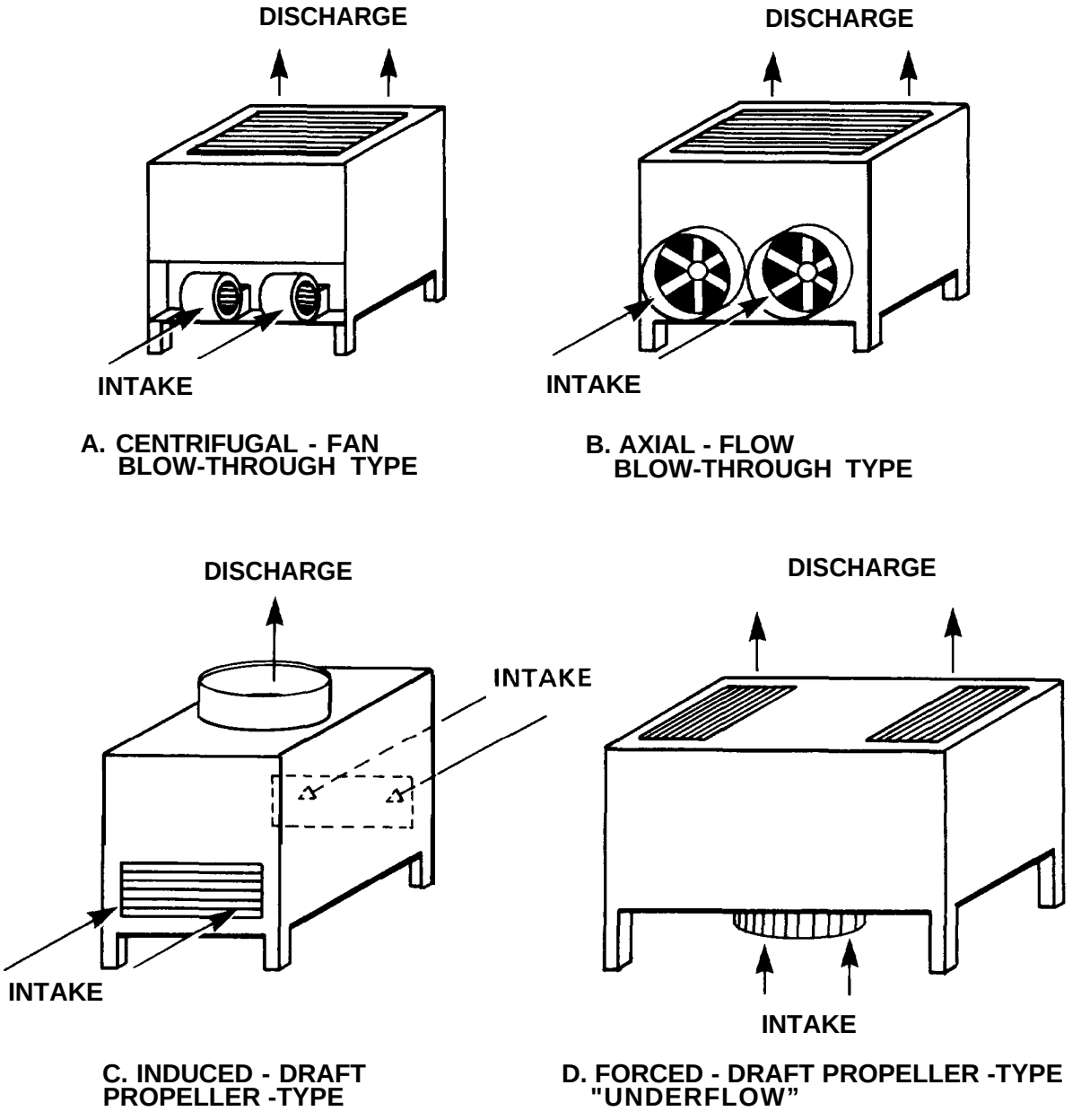

Figure C-3. Principal Types of Cooling Towers.

centrifugal-fan cooling towers are given by equations C-3 and C-4, respectively: for overall PWL (centrifugal-fan),

$$Lw = 85 + 10 \log (\text{fan hp}) \qquad \text{(eq C-3)}$$

for A-weighted PWL,

$$LW_a = 78 + 10 \log (\text{fan hp}). \qquad \text{(eq C-4)}$$

When more than one fan or cooling tower is used, "fan hp" should be the total motor-drive hp of all fans or towers. Octave band PWLs can be obtained by subtracting the values of table C-8 from the overall PWL.

b. SPLs at a distance. To obtain the average outdoor SPL at any distance, use equation 8-2 and obtain the value of the "distance term" from tables 8-3 or 8-4. Cooling towers usually radiate different amounts of sound in different directions, and the directional corrections of table C-9 should be made to the average SPL. These corrections apply to the five principal directions from a cooling tower, i.e., in a direction perpendicular to each of the four sides and to the top of the tower. If it is necessary to estimate the SPL at some direction other than the principal directions, it is common practice to interpolate between the values given for the principal directions.

c. Close-in SPLs. Sound power level data usually will not give accurate calculated SPLs at very close distances to large-size sources, such as cooling towers. The data of table C-10 may be used

Table C-7. Frequency Adjustments (in dB) for Propeller-Type Cooling Towers.

Octave Frequency Band (Hz)	Value to be Subtracted From Overall PWL (dB)
31	8
63	5
125	5
250	8
500	11
1000	15
2000	18
4000	21
8000	29
A-weighted, dB(A)	9

Table C-8. Frequency Adjustments (in dB) for Centrifugal-Fan Cooling Towers.

Octave Frequency Band (Hz)	Value to be Subtracted From Overall PWL (dB)
31	6
63	6
125	8
250	10
500	11
1000	13
2000	12
4000	18
8000	25
A-weighted, dB(A)	7

where it is required to estimate close-in SPLs at nearby walls, floors, or in closely confined spaces (at 3- to 5 foot distances from inlet and discharge openings).

c. Half-speed operation. When it is practical to do so, the cooling tower fan can be reduced to half speed in order to reduce noise; such a reduction also reduces cooling capacity. Half-speed produces approximately two-thirds cooling capacity and approximately 8- to 10-dB noise reduction in the octave bands that contain most of the fan-induced noise. For half-speed operation, the octave band SPLs or PWLs of full-speed cooling tower noise may be reduced by the following amounts, where fB is the blade passage frequency and is calculated from the relation fB = No. of fan blades *x* shaft RPM/GO.

Octave band that contains:	Noise reduction due to half-speed:
1/8 fB	3 dB
1/4 fB	6 dB
1/2 fB	9 dB
fB	9 dB
2 fB	9 dB
4 fB	6 dB
8 fB	3 dB

If the blade passage frequency is not known, it may be assumed to fall in the 63-Hz band for propeller type cooling towers and in the 250-Hz band for centrifugal cooling towers. Waterfall noise usually dominates in the upper octave bands, and it would not change significantly with reduced fan speed.

e. Limitations.

(1) *Design variations.* The data given here represent a fairly complete summary of cooling tower noise, but it must still be expected that noise levels may vary from manufacturer to manufacturer, and from model to model as specific design changes take place. Whenever possible, request the manufacturer to supply the specific noise levels for the specific needs.

(2) *Enclosed locations.* Most of the preceding discussion assumes that cooling towers will be used in outdoor locations. If they are located inside enclosed mechanical equipment rooms or within courts formed by several solid walls, the sound patterns will be distorted. In such instances, the PWL of the tower (or appropriate portions of the total PWL) can be placed in that setting, and the enclosed or partially enclosed space can be likened to a room having certain estimated amounts of reflecting and absorbing surfaces. Because of the

Table C-9. Correction to Average SPLs for Directional Effects of Cooling Towers.

(Add these decibel corrections to the *average* SPL calculated for a given distance from the tower. Do not apply these corrections for close-in positions, such as less than 10 ft. Also, these corrections apply when there are no reflecting or obstructing surfaces that would modify the normal radiation of sound from the tower.)

Octave Band (Hz)	31	63	125	250	500	1000	2000	4000	8000
CENTRIFUGAL-FAN BLOW-THROUGH TYPE									
Front (Fan inlet)	+3	+3	+2	+3	+4	+3	+2	+2	+2
Side (Enclosed)	0	0	0	-2	-3	-4	-5	-5	-5
Rear (Enclosed)	0	0	-1	-2	-3	-4	-5	-6	-6
Top (Discharge)	-3	-3	-2	0	+1	+2	+3	+4	+5
AXIAL-FLOW BLOW-THROUGH TYPE									
Front (Fan inlet)	+2	+2	+4	+6	+6	+5	+5	+5	+5
Side (Enclosed)	+1	+1	+1	-2	-5	-5	-5	-5	-4
Rear (Enclosed)	-3	-3	-4	-7	-7	-7	-8	-11	-8
Top (Discharge)	-5	-5	-5	-5	-2	0	0	+2	+1
INDUCED-DRAFT PROPELLER-TYPE									
Front (Air inlet)	0	0	0	+1	+2	+2	+2	+3	+3
Side (Enclosed)	-3	-3	-3	-3	-3	-3	-4	-5	-6
Top (Discharge)	+3	+3	+3	+3	+3	+4	+4	+3	+3
"UNDERFLOW" FORCED-DRAFT PROPELLER-TYPE									
Any side	-1	-1	-1	-2	-2	-3	-3	-4	-4
Top	+2	+2	+2	+3	+3	+4	+4	+5	+5

limitless number of possible arrangements, this is not handled in a general way, so the problem of partially enclosed cooling towers is not treated here. In the absence of a detailed analysis of cooling tower noise levels inside enclosed spaces, it is suggested that the close-in noise levels of table C-10 be used as approximations.

f. Evaporative condensers. Evaporative condensers are somewhat similar to cooling towers in terms of noise generation. A few evaporative condensers have been included with the cooling towers, but not enough units have been measured to justify a separate study of evaporative condensers alone. In the absence of noise data on specific evaporative condensers, it is suggested that noise data be used for the most nearly similar type and size of cooling tower.

g. Air-cooled condensers. For some installations, an outdoor air-cooled condenser may serve as a substitute for a cooling tower or evaporative condenser. The noise of an air-cooled condenser is made up almost entirely of fan noise and possibly air-flow noise through the condenser coil decks. In general, the low-frequency fan noise dominates. Since most of the low-frequency noise of a typical cooling tower is due to the fan system, in the absence of specific data on air-cooled condensers, it is suggested that noise data be used for the most nearly similar type and size of cooling tower.

h. Ejector-type cooling tower. This is a fanless-type cooling tower that induces air flow through the use of nozzles of high-pressure water spray. Noise levels are generally lower for the ejector cooling tower than for cooling towers using fans to produce air flow. Adequate vibration isolation of the drive pump, piping, and tower are necessary, although the elimination of the fan reduces the severity of tower vibration.

C-11. Pumps.

The overall and A-weighted 3 foot SPLs given in table C-11. The pump power rating is taken as the nameplate power of the drive motor. This is easily determined in field measurements, whereas actual hydraulic power would be unknown in a field situation. For pump ratings under 100 hp, the radiated noise increases with the function (10 log hp), but about 100 hp the noise changes more slowly with increasing power, hence, the function (3 log hp). Octave band SPLs are obtained by subtracting the values of table C-12 from the overall SPLs of table C-11. Pumps intended for high-pressure operation have smaller clearances between the blade tips and the cutoff edge and, as a result, may have higher noise peaks than shown in tables C-11 and C-12 (by 5 dB, sometimes 10

Table C-10. Approximate Close-In SPLs (in dB) Near the Intake and Discharge Openings of Various Cooling Towers (3- to 5ft. distance).

Octave Band (Hz)	31	63	125	250	500	1000	2000	4000	8000
CENTRIFUGAL-FAN BLOW-THROUGH TYPE									
Intake	85	85	85	83	81	79	76	73	68
Discharge	80	80	80	79	78	77	76	75	74
AXIAL-FLOW BLOW-THROUGH TYPE (INCLUDING "UNDERFLOW" TYPE)									
Intake	97	100	98	95	91	86	81	76	71
Discharge	88	88	88	86	84	82	80	78	76
PROPELLER-FAN INDUCED-DRAFT TYPE									
Intake	94	96	94	92	88	83	78	72	65
Discharge	99	103	99	95	90	85	81	76	70

Table C-11. Overall and A-Weighted Sound Pressure Levels (in dB and dB(A) at 3-ft. Distance) for Pumps.

Speed Range rpm	Drive Motor Nameplate Power Under 100 hp	Above 100 hp
Overall sound messure level, dB:		
3000-3600	71+10 log hp	85+3 log hp
1600-1800	74+10 log hp	88+3 log hp
1000-1500	69+10 log hp	83+3 log hp
450- 900	67+10 log hp	81+3 log hp
A-weighted sound level, dB(A):		
3000-3600	69+10 log hp	82+3 log hp
1600-1800	72+10 log hp	86+3 log hp
1000-1500	67+10 log hp	81+3 log hp
450- 900	65+10 log hp	79+3 log hp

dB) in the octave bands containing the impeller blade passage frequency and its first harmonic. These would usually fall in the 1,000 and 2,000 Hz octave bands. The data of tables C-11 and C-12 are summarized in figure C-4.

Table C-12. Frequency Adjustments fin dB) for Pumps.

Octave Frequency Band (Hz)	Value to be Subtracted From Overall SPL (dB)
31	13
63	12
125	11
250	9
500	9
1000	6
2000	9
4000	13
8000	19
A-weighted, dB(A)	2

C-12. Fans.

a. In-duct noise. Recent issues of ASHRAE publications provide updated methods for estimating the in-duct noise of ventilating fans. Manufacturers also furnish in-duct PWL data of their fans on request. A current ASHRAE estimation is given by equation C-5:

$$Lw = Kw + 10 \log Q + 20 \log P + BFI + C, \quad \text{(eq C-5)}$$

where Lw the in-duct sound power level of the fan at either the inlet or discharge end of the fan, Kw the specific sound power level for the particular fan design, Q is the volume flow rate in cfm (ft.3/min.), and P is the static pressure produced by the fan (inches of water gage). Values of Kw for the octave bands and for various basic fan blade designs are given in part A of table C-13. The blade passage frequency of the fan is obtained from

fan RPM x no. of blades/60

and the "blade frequency increment" BFI (in dB) is added to the octave band sound power level in the octave in which the blade passage frequency occurs. It is best to obtain the number of blades and the fan rotational speed from the manufacturer to calculate the blade passage frequency. In the event this information is not available, part B of table C-13 provides the usual blade passage frequency. The estimates given by this method assume ideal inlet and outlet flow conditions and operation of the fan at its design condition. The noise is quite critical to these conditions and increases significantly for deviations from ideal.

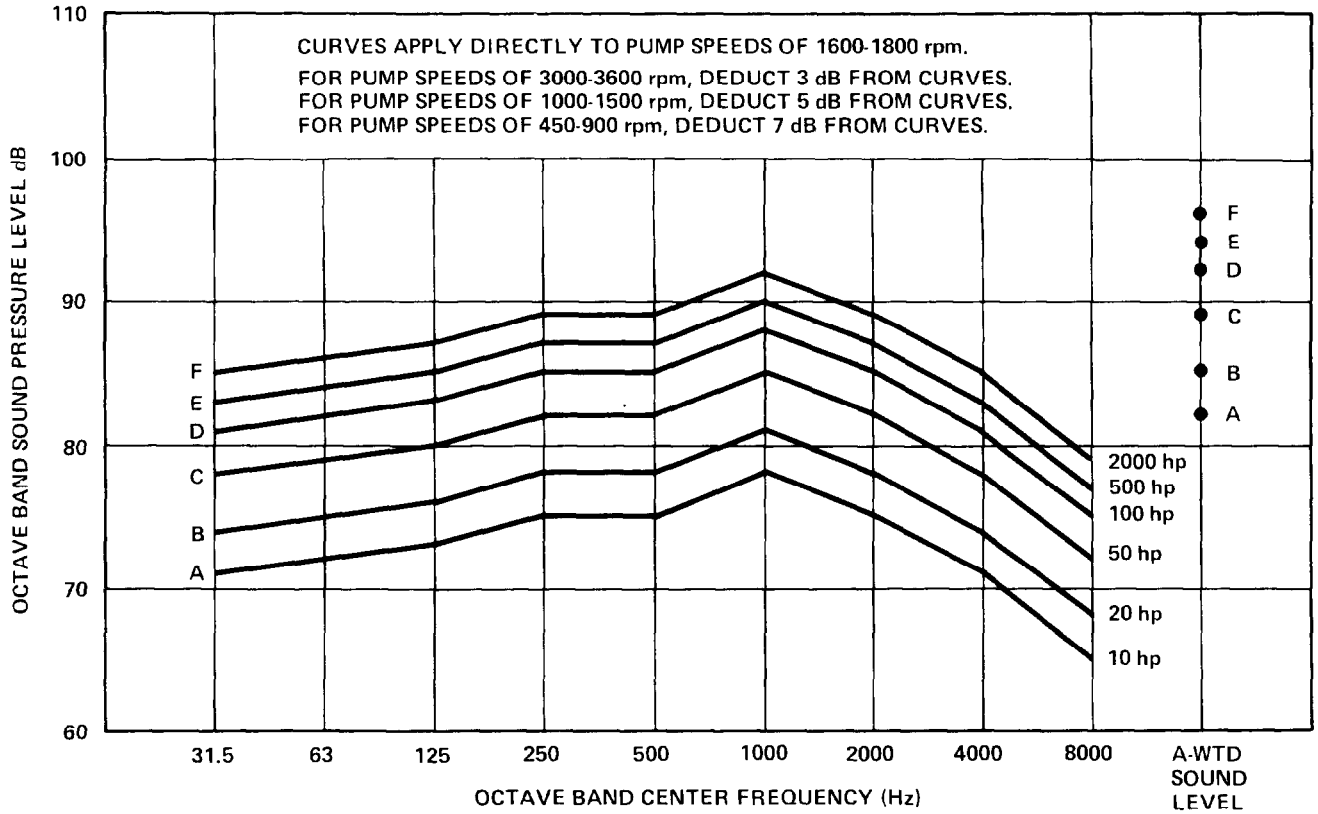

Figure C-4. Sound Pressure Levels of Pumps at 3-ft. Distance.

Part C of table C-13 provides a correction factor for off-peak fan operation. Section 12.0 contains a detailed analyses of the noise and noise control of ducted ventilation systems.

b. Noise reduction from fan housing. The fan housing and its nearby connected ductwork radiate fan noise into the fan room. The amount of noise is dependent on both internal and external dimensions of the housing and ductwork, the TL of the sheet metal, and the amount of sound absorption material inside the ductwork. Because of so many variables, there is no simple analysis procedure for estimating the PWL of the noise radiated by the housing and ductwork. However, table C-14 offers a rough estimate of this type of noise. These are simply deductions, in dB, from the induct fan noise. At low frequency, the housing appears acoustically transparent to the fan noise, but as frequency increases, the TL of the sheet metal becomes increasingly effective.

C-13. Air Compressors.

Two types of air compressors are frequently found in buildings: one is a relatively small compressor (usually under 5 hp) used to provide a high pressure air supply for operating the controls of the ventilation system, and the other is a medium-size compressor (possibly up to 100 hp) used to provide "shop air" to maintenance shops, machine shops, and laboratory spaces, or to provide ventilation system control pressure for large buildings. Larger compressors are used for special industrial processes or special facilities, but these are not considered within the scope of the manual. The 3 foot SPLs are given in figure C-5 and table C-15.

C-14. Reciprocating Engines.

In a separate project for the Department of the Army, a comprehensive study has been made of the noise characteristics of reciprocating and turbine engines fueled by natural gas and liquid fuel. In TM 5-805-9/AFM 88-20/NAVFAC DM-3.14, details are given for handling these data and for designing noise control treatments for small power plants at military bases. The noise levels of the engines as sound sources are summarized here, because these engines may be used as power sources in buildings, and their noise should be taken into account. Typically, each engine type has three sound sources of interest; the engine casing, the air inlet into the engine, and the exhaust from the engine.

a. Engine casing. The PWL of the noise radiated by the casing of a natural-gas or diesel reciprocating engine is given by equation C-6:

Table C-13. Specific Sound Power Levels Kw (in dB), Blade Frequency Increments (in dB) and Off-Peak Correction for Fans of Various Types, for Use in Equation C-5.

Part A. Specific Sound Power Levels for Inlet or Outlets and Blade Frequency Increments (BFI) for Fans.

Fan & Blade Type	Size & Operation	Octave Band Center Frequency – Hz 63	125	250	500	1000	2000	4000	8000	BFI
CENTRIFUGAL – Airfoil, Backward Curved and Inclined	Over 30 in. dia.	37	37	36	31	27	20	16	14	3
	Under 30 in. dia.	42	42	40	36	31	25	21	16	3
CENTRIFUGAL – Forward Curved	All sizes	50	50	40	33	33	28	23	18	2
CENTRIFUGAL – Radial	Low Pressure, SP 4" to 10"									
	Over 40 in. dia.	53	44	40	36	34	29	26	23	7
	Under 40 in. dia.	64	58	50	40	39	36	31	28	7
	Mid Pressure, SP 10" to 20"									
	Over 40 in. dia.	55	51	42	39	35	30	26	23	8
	Under 40 in. dia.	65	60	48	45	43	38	34	31	8
	High Pressure, SP 20" to 60"									
	Over 40 in. dia.	58	55	50	46	43	41	38	35	8
	Under 40 in. dia.	68	64	56	51	51	49	46	43	8
VANEAXIAL	Hub Ratio 0.3 to 0.4	46	40	40	46	44	42	35	31	6
	Hub Ratio 0.4 to 0.6	46	40	43	40	38	33	27	25	6
	Hub Ratio 0.6 to 0.8	56	49	48	48	46	44	40	37	6
TUBEAXIAL	Over 40 in. dia.	48	43	44	46	44	43	36	34	7
	Under 40 in. dia.	45	44	46	50	49	48	40	37	7
PROPELLER	All sizes	45	48	55	53	52	46	43	39	5

Note – Kw for inlet or outlet level, add 3 dB for total level.

Part B. Octave band in which blade frequency increment (BFI) occurs.

Fan Type		Octave Band in Which BFI occurs
Centrifugal		
	Airfoil, backward curved & backward inclined	250 Hz
	Forward curved	500 Hz
	Radial blade	125 Hz
Vaneaxial		125 Hz
Tubeaxial		63 Hz
Propeller		63 Hz

Note – Use for estimating purposes only. Where actual fan is known, use manufacturers' data.

Part C. Correction factor, C, for off-peak operation.

Static Efficiency % of Peak	Correction Factor dB
90 to 100	0
85 to 89	3
75 to 84	6
65 to 74	9
55 to 64	12
50 to 54	15

Table C-14. Approximate Octave-Band Adjustments for Estimating the PWL of Noise Radiated by a Fan Housing and its Nearby Connected Duct Work.

Octave Frequency Band (Hz)	Value to be Subtracted From In-Duct Fan Noise (dB)
31	—
63	0
125	0
250	5
500	10
1000	15
2000	20
4000	22
8000	25

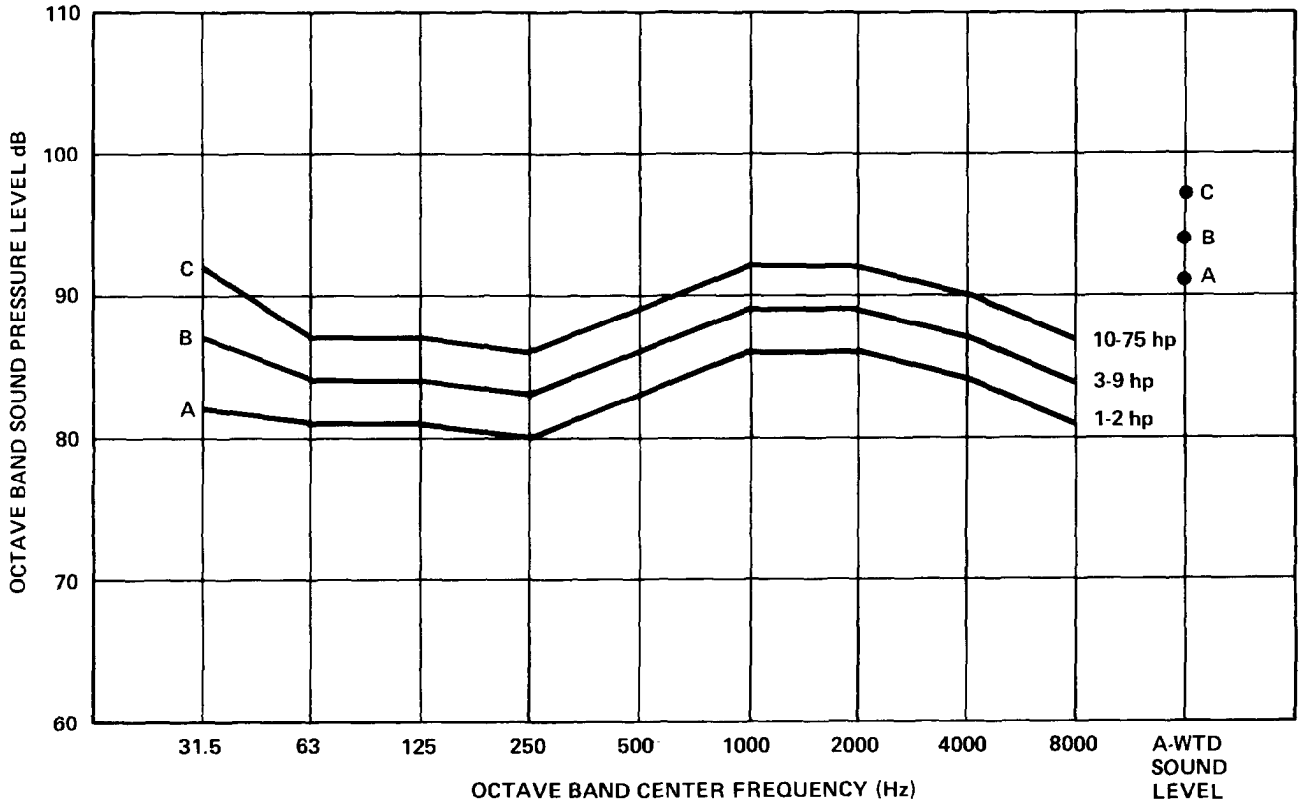

Figure C-5. Sound Pressure Levels of Air Compressors at 3-ft. Distance.

Table C-15. Sound Pressure Levels (in dB at 3-ft. Distance) for Air Compressors.

Octave Frequency Band (Hz)	Air Compressor Power Range		
	1-2 hp (dB)	3-9 hp (dB)	10-75 hp (bB)
31	82	87	92
63	81	84	87
125	81	84	87
250	80	83	86
500	83	86	89
1000	86	89	92
2000	86	89	92
4000	84	87	90
8000	81	84	87
A-weighted, dB(A)	91	94	97

$$Lw = 93 + 10 \log (\text{rated hp}) + A + B + C + D , \qquad \text{(eq C-6)}$$

where Lw is the overall sound power level (in dB), "rated hp" is the engine manufacturer's continuous full-load rating for the engine (in horsepower), and A, B, C, and D are correction terms (in dB), given in table C-16. Octave band PWLs can be obtained by subtracting the table C-17 values from the overall PWL given by equation C-6. The octave band corrections are different for the different engine speed groups. For small engines (under about 450 hp), the air intake noise is usually radiated close to the engine casing, so it is not easy or necessary to separate these two sources; and the engine casing noise may be considered as including air intake noise (from both naturally aspirated and turbocharged engines).

b. Turbocharged air inlet. Most large engines have turbochargers at their inlet to provide pressurized air into the engine for increased performance. The turbocharger is a turbine driven by

Table C-16. Correction Terms (in dB) to be Applied to Equation C-6 for Estimating the Overall PWL of the Casing Noise of a Reciprocating Engine.

	dB
Speed correction term "A"	
Under 600 rpm	-5
600-1500 rpm	-2
Above 1500 rpm	0
Fuel correction term "B"	
Diesel fuel only	0
Diesel and/or natural gas	0
Natural gas only (may have small amount of "pilot oil")	-3
Cylinder arrangement term "C"	
In-line	0
V-type	-1
Radial	-1
Air intake correction term "D"	
Unducted air inlet to unmuffled Roots Blower	+3
Ducted air from outside the room or into muffled Roots Blower	0
All other inlets to engine (with or without turbochargers)	0

Table C-17. Frequency Adjustments (in dB) for Casing Noise of Reciprocating Engines.

Octave Frequency Band (Hz)	Value to be Subtracted From Overall PWL, in dB			
	Engine Speed Under 600 rpm	Engine Speed 600-1500 rpm		Engine Speed Over 1500 rpm
		Without Roots Blower	With Roots Blower	
31	12	14	22	22
63	12	9	16	14
125	6	7	18	7
250	5	8	14	7
500	7	7	3	8
1000	9	7	4	6
2000	12	9	10	7
4000	18	13	15	13
8000	28	19	26	20
A-weighted, dB(A)	4	3	1	2

the released exhaust gas of the engine. The turbine is a high-frequency sound source. Turbine configuration and noise output can vary appreciably, but an approximation of the PWL, of the turbocharger noise is given by equation C-7:

$$Lw = 94 + 5 \log (\text{rated hp}) - L/6, \qquad \text{(eq C-7)}$$

where Lw and "rated hp" are already defined and L is the length, in ft., of a ducted inlet to the turbocharger. For many large engines, the air inlet may be ducted to the engine from a fresh air supply or a location outside the room or building. The term L/6, in dB, suggests that each 6 ft. of inlet ductwork, whether or not lined with sound absorption material, will provide about 1 dB of reduction of the turbocharger noise radiated from the open end of the duct. This is not an accurate figure for ductwork in general; it merely represents a simple token value for this estimate. The octave band values given in table C-18 are subtracted from the overall PWL of equation C-7 to obtain the octave band PWLs of turbocharged inlet noise.

c. Engine exhaust. The PWL of the noise radiated from the unmuffled exhaust of an engine is given by equation C-8:

$$Lw = 119 + 10 \log (\text{rated hp}) - T - L/4 \qquad \text{(eq C-8)}$$

Table C-18. Frequency Adjustments fin dB) for Turbocharger Air Inlet Noise.

Octave Frequency Band (Hz)	Value to be Subtracted From Overall PWL (dB)
31	4
63	11
125	13
250	13
500	12
1000	9
2000	8
4000	9
8000	17
A-weighted, dB(A)	3

where T is the turbocharger correction term (T = 0 dB for an engine without a turbocharger and T = 6 dB for an engine with a turbocharger) and L is the length, in ft., of the exhaust pipe. A turbocharger takes energy out of the discharge gases and results in an approximately 6-dB reduction in noise. The octave band PWLs of unmuffled exhaust noise are obtained by subtracting the values of table C-19 from the overall PWL derived from equation C-8. If the engine is equipped with an exhaust muffler, the final noise radiated from the end of the tailpipe is the PWL of the unmuffled exhaust minus the insertion loss, in octave bands, of the muffler.

C-15. Gas Turbine Engines.

a. PWL of three sources. As with reciprocating engines, the three principal sound sources of turbine engines are: the engine casing, the air inlet, and the exhaust. Most gas turbine manufactures will provide sound power estimates of these sources. However when these are unavailable the overall PWLs of these three sources, with no noise reduction treatments, are given in the following equations:

for engine casing noise,

$$Lw = 120 + 5 \log (\text{rated MW}); \qquad \text{(eq C-9)}$$

for air inlet noise,

$$Lw = 127 + 15 \log (\text{rated MW}); \qquad \text{(eq C-10)}$$

for exhaust noise

$$Lw = 133 + 10 \log (\text{rated MW}); \qquad \text{(eq C-11)}$$

Table C-19. Frequency Adjustments (in dB) for Unmuffled Engine Exhaust Noise.

Octave Frequency Band (Hz)	Value to be Subtracted From Overall PWL (dB)
31	5
63	9
125	3
250	7
500	15
1000	19
2000	25
4000	35
8000	43
A-weighted, dB (A)	12

where "rated MW" is the maximum continuous full-load rating of the engine in megawatts. If the manufacturer lists the rating in "effective shaft horsepower" (eshp), the MW rating may be approximated by

$$MW = eshp/1400.$$

Overall PWLs, obtained from equations C-9 through C-11, are tabulated in table C-20 for a useful range of MW ratings.

(1) *Tonal components.* For casing and inlet noise, particularly strong high-frequency sounds may occur at several of the upper octave bands. However which bands contain the tones will depend on the specific design of the turbine and, as such, will differ detween models and manufacturers. Therefore, the octave band adjustments of table C-21 allow for these peaks in several different bands, even though they probably will not occur in all bands. Because of this randomness of peak frequencies, the A-weighted levels may also vary from the values quoted.

(2) *Engine covers.* The engine manufacturer sometimes provides the engine casing with a protective thermal wrapping or an enclosing cabinet, either of which can give some noise reduction. Table C-22 suggests the approximate noise reduction for casing noise that can be assigned to different types of engine enclosures. Refer to the notes of the table for a broad description of the enclosures. The values of table C-22 may be subtracted from the octave band PWLs of casing noise to obtain the adjusted PWLs of the covered or enclosed casing. An enclosure specifically designed to control casing noise can give larger noise reduction values than those in the table. However it should be noted that the performance of enclosures that are supported on the same structure as the gas turbine, will be limited by structure borne sound. For this reason care should be used in applying laboratory data of enclosure performance to the estimation of sound reduction of gas turbine enclosures.

b. Exhaust and intake stack directivity. Frequently, the exhaust of a gas turbine engine is directed upward. The directivity of the stack provides a degree of noise control in the horizontal direction. Or, in some installations, it may be beneficial to point the intake or exhaust opening horizontally in a direction away from a sensitive receiver area. In either event, the directivity is a factor in noise radiation. Table C-23 gives the approximate directivity effect of a large exhaust opening. This can be used for either a horizontal or vertical stack exhausting hot gases. Table C-23 shows that from approximately 0 to 60 degrees from the axis of the stack, the stack will yield

Table C-20. Overall PWLs of the Principal Noise Components of Gas Turbine Engines Having No Noise Control Treatments

Rated MW	Casing PWL dB	Inlet PWL dB	Exhaust PWL dB
0.10	115	112	123
0.13	116	114	124
0.16	116	115	125
0.20	117	117	126
0.25	117	118	127
0.32	118	120	128
0.40	118	121	129
0.50	118	122	130
0.63	119	124	131
0.80	120	126	132
1.0	120	127	133
1.3	121	129	134
1.6	121	130	135
2.0	122	132	136
2.5	122	133	137
3.2	123	135	138
4.0	123	136	139
5.0	123	137	140
6.3	124	139	141
8.0	125	141	142
10	125	142	143
13	126	144	144
16	126	145	145
20	127	147	146
25	127	148	147
32	128	150	148
40	128	151	149
50	128	152	150
63	129	154	151
80	130	156	152

higher sound levels than if there was no stack and the sound were emitted by a nondirectional point source. From about 60 to 135 degrees from the axis, there is less sound level than if there were no stack. In other words, directly ahead of the opening there is an increase in noise, and off to the side of the opening there is a decrease in noise. The table C-23 values also apply for a large-area intake opening into a gas turbine for the 0 to 60 degree range; for the 90 to 135 degree range, subtract an addition 3 dB from the already negative-valued quantities. For horizontal stacks, sound-reflecting obstacles out in front of the stack opening can alter the directivity pattern. Even irregularities on the ground surface can cause some backscattering of sound into the 90 to 180 degree regions, for horizontal stacks serving either as intake or exhaust openings. For small openings in a wall, such as for ducted connections to a fan intake or discharge, use approximately one-half the directivity effect of table C-23 (as applied to intake openings) for the 0 to 90 degree region. For angles beyond 90 degrees, estimate the effect of the wall as a barrier.

C-16. Electric Motors.

Motors cover a range of 1 to 4000 hp and 450 to 3600 RPM. The data include both “drip-proof'

Table C-21. Frequency Adjustments (in dB) for Gas Turbine Engine Noise Sources.

Octave Frequency Band (Hz)	Value To Be Subtracted From Overall PWL, in dB		
	Casing	Inlet	Exhaust
31	10	19	12
63	7	18	8
125	5	17	6
250	4	17	6
500	4	14	7
1000	4	8	9
2000	4	3	11
4000	4	3	15
8000	4	6	21
A-weighted, dB(A)	2	0	4

(DRPR) (splash-proof or weather-protected) and "totally enclosed fan-cooled" (TEFC) motors. Noise levels increase with power and speed.

a. TEFC motors. The overall SPLs of TEFC motors, at the normalized 3 foot condition, follow approximately the relationships of equations C-12 and C-13.

for power ratings under 50 hp,
Lp = 15 + 17 log hp + 15 log RPM. (eq C-12)

for power ratings above 50 hp,
Lp = 27 + 10 log hp + 15 log RPM (eq C-13)

where "hp" is the nameplate motor rating in horsepower and "RPM" is the motor shaft speed. For motors above 400 hp, the calculated noise value for a 400-hp motor should be used. These data are not applicable to large commercial motors in the power range of 1000 to 5000 hp. The octave band corrections for TEFC motors are given in table C-24. The data of equations C-12 and C-13 and table C-24 are summarized in figure C-6, which gives the SPLs at 3 foot distance for TEFC motors for a working range of speeds and powers. Some motors produce strong tonal sounds in the 500, 1,000, or 2,000 Hz octave bands because of the cooling fan blade frequency. Table C-24 and figure C-6 allow for a moderate amount of these tones, but a small percentage of motors may still exceed these calculated levels by as much as 5 to 8 dB. When specified, motors that are quieter than these calculated values by 5 to 10 dB can be purchased.

b. DRPR motors. The overall SPLs of DRPR motors, at the normalized 3 foot condition, follow approximately the relationships of equations C-14 and C-15.

for power ratings under 50 hp,
Lp = 10 + 17 log hp + 15 log RPM. (eq C-14)

for power ratings above 50 hp,
Lp = 22 + 10 log hp + 15 log RPM. (eq C-15)

For motors above 400 hp, the calculated noise value for a 400 hp motor should be used. The octave band corrections for DRPR motors are given in table C-25. The data of equations C-14 and C-15 and table C-25 are summarized in figure C-7, which gives the SPLs at 3 foot distance for DRPR motors over a range of speeds and powers.

C-17. Steam Turbines.

Noise levels are found generally to increase with increasing power rating, but it has not been possible to attribute any specific noise characteristics with speed or turbine blade passage frequency (because these were not known on the units measured). The suggested normalized SPLs at 3 foot distance are given in figure C-8 and table C-26.

C-18. Gears.

It is generally true that the noise output increases with increasing speed and power but it is not possible to predict in which frequency band the gear tooth contact rate or the "ringing fre-

Table C-22. Approximate Noise Reduction of Gas Turbine Engine Casing Enclosures.

Octave Frequency Band (Hz)	Noise Reduction, dB				
	Type 1	Type 2	Type 3	Type 4	Type 5
31	2	4	1	3	6
63	2	5	1	4	7
125	2	5	1	4	8
250	3	6	2	5	9
500	3	6	2	6	10
1000	3	7	2	7	11
2000	4	8	2	8	12
4000	5	9	3	8	13
8000	6	10	3	8	14

Notes:

Type 1. Glass fiber or mineral wool thermal insulation with lightweight foil cover over the insulation.

Type 2. Glass fiber or mineral wool thermal insulation with minimum 20 gage aluminum or 24 gage steel or 1/2-in. thick plaster cover over the insulation.

Type 3. Enclosing metal cabinet for the entire packaged assembly, with open ventilation holes and with *no* acoustic absorption lining inside the cabinet.

Type 4. Enclosing metal cabinet for the entire packaged assembly, with open ventilation holes and *with* acoustic absorption lining inside the cabinet.

Type 5. Enclosing metal cabinet for the entire packaged assembly, with all ventilation holes into the cabinet muffled and with acoustic absorption lining inside the cabinet.

quencies" will occur for any unknown gear. The possibility that these frequency components may occur in any of the upper octave bands is covered by, equation C-16, which gives the octave band SPL estimate (at the 3 feet normalized condition) for all bands at and above 125 Hz:

$$Lp = 78 + 3 \log (RPM) + 4 \log (hp) \quad \text{(eq C-16)}$$

where "RPM" is the speed of the slower gear shaft and "hp" is the horsepower rating of the gear or the power transmitted through the gear. For the 63 Hz band, 3 dP is deducted; and for the 31 Hz band, 6 dB is deducted from the equation C-16 value. This estimate may not be highly accurate, but it will provide a reasonable engineering evaluation of the gear noise. Table C-17 gives the estimated SPL in the 125 through 8,000 Hz bands for a variety of speeds and powers, based on equation C-16.

C-19. Generators.

The noise of generators, in general, can be quite variable, depending on speed, the presence or absence of air cooling vanes, clearances of various rotor parts, etc., but, most of all, on the driver mechanism. When driven by gas or diesel reciprocating engines, the generator is usually so much quieter than the engine that it can hardly be measured, much less heard. For gas turbine engines, the high-speed generator may be coupled to

Table G23. Approximate Directivity Effect fin dB) of a Large Exhaust Stack Compared to a Nondirectional Source of the Same Power.

Octave Frequency Band (Hz)	Relative Sound Level for Indicated Angle From Axis				
	0°	45°	60°	90°[a]	135° and larger[a]
31	8	5	2	-2	-3
63	8	5	2	-3	-4
125	8	5	2	-4	-6
250	8	6	2	-6	-8
500	9	6	2	-8	-10
1000	9	6	1	-10	-13
2000	10	7	0	-12	-16
4000	10	7	-1	-14	-18
8000	10	7	-2	-16	-20

[a]For air intake openings subtract 3 dB from the values in the 90° and 135° columns, i.e., -2 -3 = -5 dB for 31 cps at 90°.

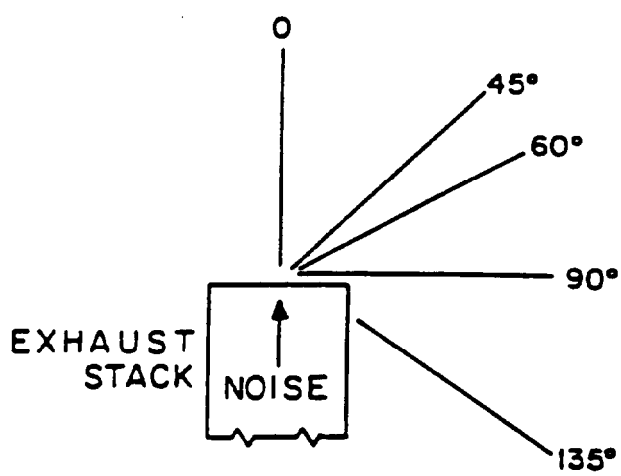

the engine through a large gear, and the gear and the generator may together produce somewhat indistinguishable noise in their compartment, which frequently is separated by a bulk head from the engine compartment. Table C-28 gives an approximation of the overall PWL of several generators. It is not claimed that this is an accurate estimate, but it should give reasonable working values of PWL. It is to be noted that the PWL of the generator is usually less than that of the drive gear and less than that of the untreated engine casing. Octave band corrections to the overall PWL are given in table C-29.

C-20. Transformers.

The National Electrical Manufacturers Association (NEMA) provides a means of rating the noise output of transformers. The NEMA "audible sound level," as it is called in the standard, is the average of several A-weighted sound levels measured at certain specified positions. The NEMA sound level for a transformer can be provided by

Table C-24. Frequency Adjustments (in dB) for TEFC Electric Motors.

Octave Frequency Band (Hz)	Value to be Subtracted From Overall SPL (dB)
31	14
63	14
125	11
250	9
500	6
1000	6-
2000	7
4000	12
8000	20
A-weighted, dB(A)	1

the manufacturer. On the basis of field studies of many transformer installations, the PWL in octave bands has been related to the NEMA rating and the area of the four side walls of the unit. This relationship is expressed by equation C-17:

$$Lw = \text{NEMA rating} + 10 \log A + C, \qquad \text{(eq C-17)}$$

where "NEMA rating" is the A-weighted sound level of the transformer provided by the manufacturer, obtained in accordance with current NEMA Standards, A is the total surface area of the four side walls of the transformer in ft.2, and C is an octave band correction that has different values for different uses, as shown in table C-30. If the exact dimensions of the transformer are not known, an approximation will suffice. If in doubt, the area should be estimated on the high side. An error of 25 percent in area will produce a change of 1 dB in the PWL. The most nearly applicable C value from table C-30 should be used. The Cl value assumes normal radiation of sound. The C2 value should be used in regular-shaped confined spaces where standing waves will very likely occur, which typically may produce 6 dB higher sound levels at the transformer harmonic frequencies of 120, 240, 360, 480, and 600 Hz (for 60-Hz line frequency; or other sound frequencies for other line frequencies). Actually, the sound power level of the transformer does not increase in this location, but the sound analysis procedure is more readily handled by presuming that the sound power is increased. The C3 value is an approximation of the noise of a transformer that has grown noisier (by about 10 dB) during its lifetime. This happens occasionally when the laminations or tie-bolts become loose, and the transformer begins to buzz or rattle. In a highly critical location, it would be wise to use this value. All of the table C-30 values assume that the transformer initially meets it quoted NEMA sound level rating. Field measurements have shown that transformers may actually have A-weighted sound levels that range from a few decibels (2 or 3 dB) above to as much as 5 or 6 dB below the quoted NEMA value. Quieted transformers that contain various forms of noise control treatments can be purchased at as much as 15 to 20 dB below normal NEMA ratings. If a quieter transformer is purchased and used, the lowered sound level rating should be used in place of the regular NEMA rating in equation C-17, and the appropriate corrections from table C-30 selected.

C-21. Opening In A Wall.

An opening, such as a door, window, or louvered vent, in an exterior wall of a noisy room will allow noise to escape from that room and perhaps be disturbing to neighbors. The PWL of the sound that passes through the opening can be estimated from equation C-18:

$$Lw = Lp + 10 \log A - 10 \qquad \text{(eq C-18)}$$

where Lp is the SPL in the room at the location of the opening and A is the area, in ft.2, of the opening. (Note, the factor of - 10 is due to the use of ft.2 for A, if m2 had been used then this factor would be 0) Once the PWL is estimated, the SPL at any neighbor distance can be estimated with the use of chapter 5 material. For normal openings (windows or vents) without ducted connections to the noise source, it may be assumed that the sound radiates freely in all directions in front of the opening, but to the rear of the wall containing the opening, the barrier effect of the wall should be taken into account. For ducted connections from a sound source to an opening in the wall, the sound is somewhat "beamed" out of the opening and may be assumed to have a directivity effect of above one-half the amount given in table C-23 for air intake openings of large stacks.

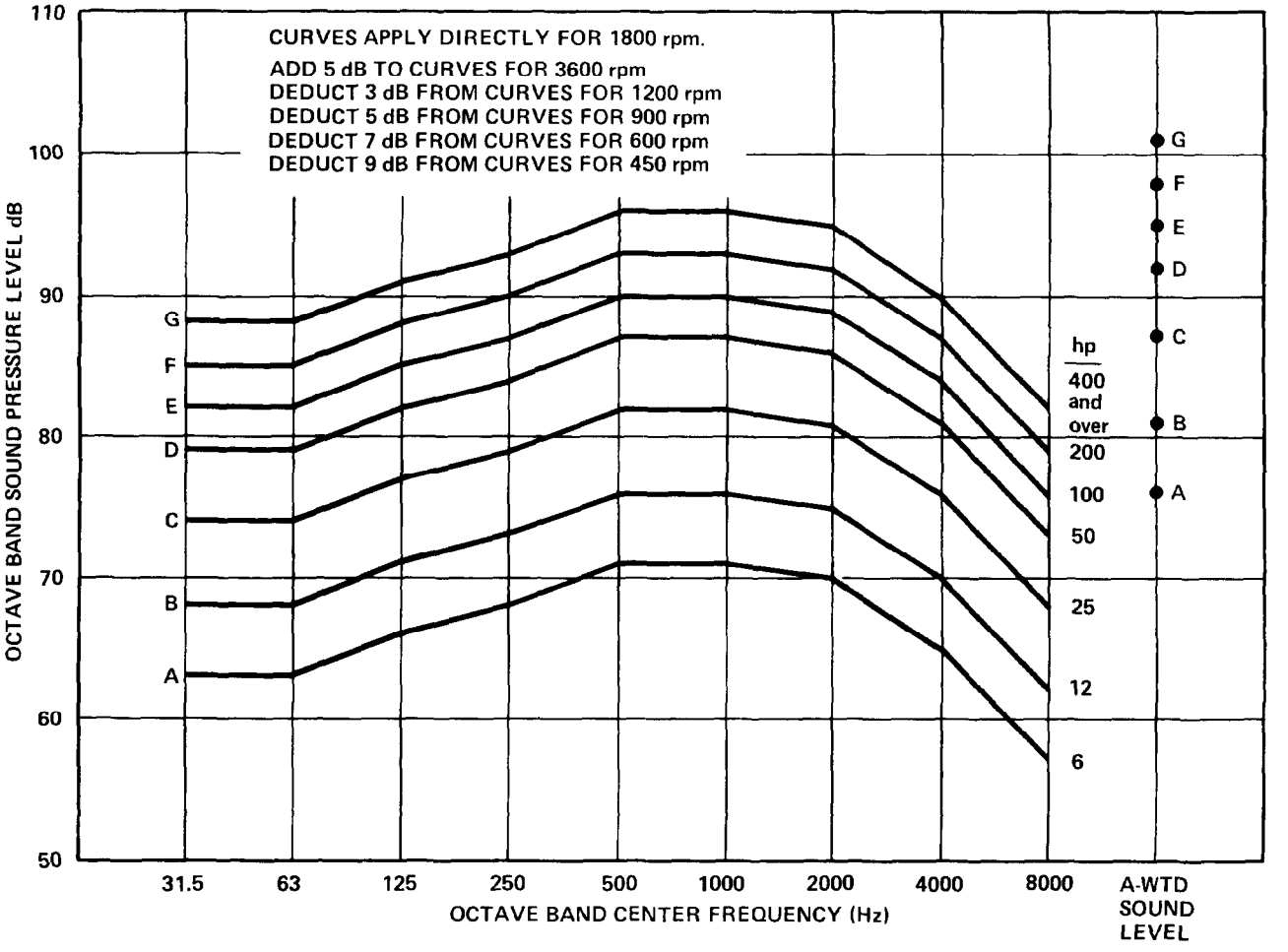

Figure C-6. Sound pressure levels of TEFC motors at 3-ft. distance.

Table C-25. Frequency Adjustments (in dB) for DRPR Electric Motors.

Octave Frequency Band (Hz)	Value to be Subtracted From Overall SPL (dB)
31	9
63	9
125	7
250	7
500	6
1000	9
2000	12
4000	18
8000	27
A-weighted, dB(A)	4

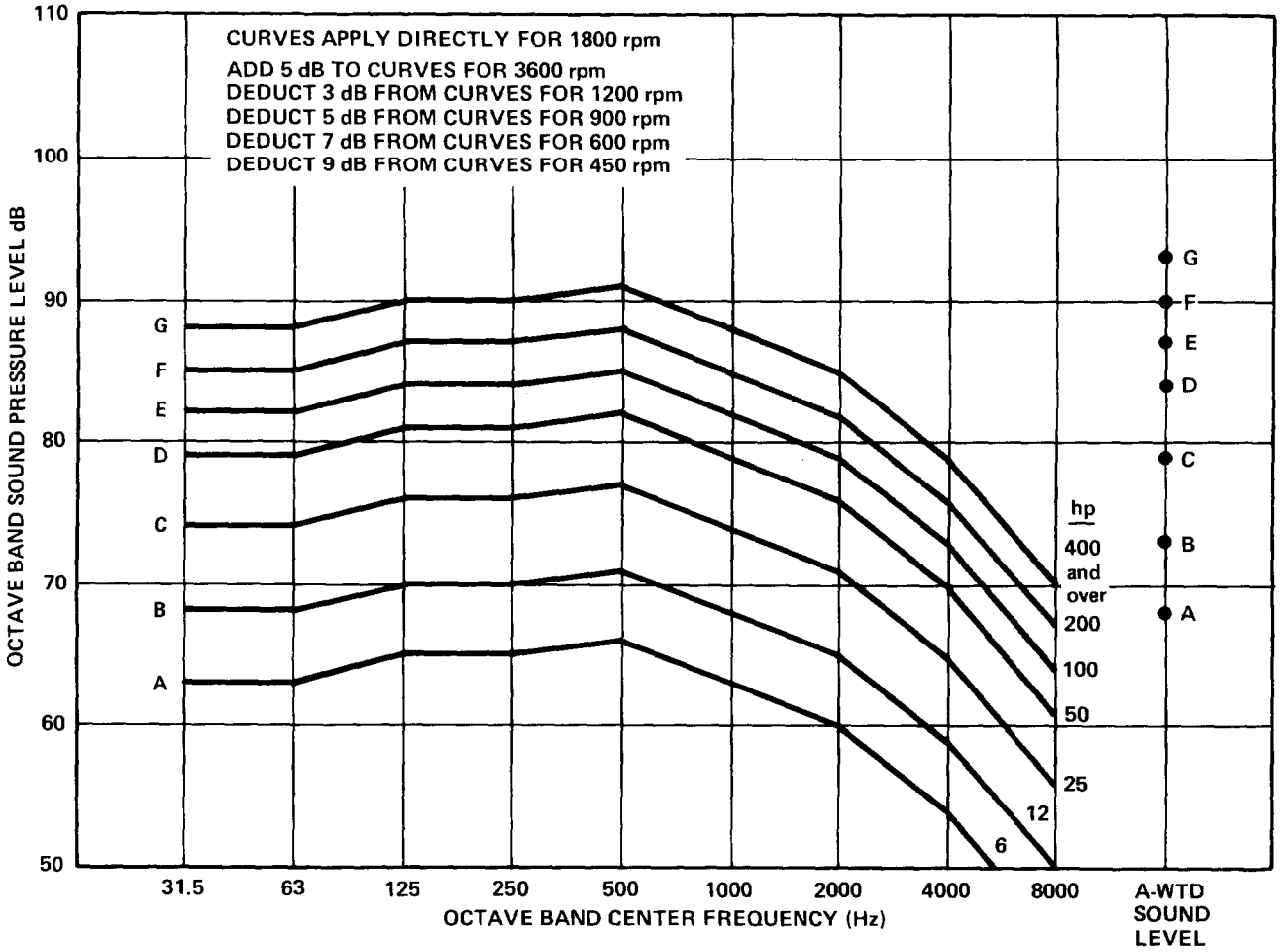

Figure C-7. Sound Pressure Levels of DRPR Motors at 3 ft. Distance.

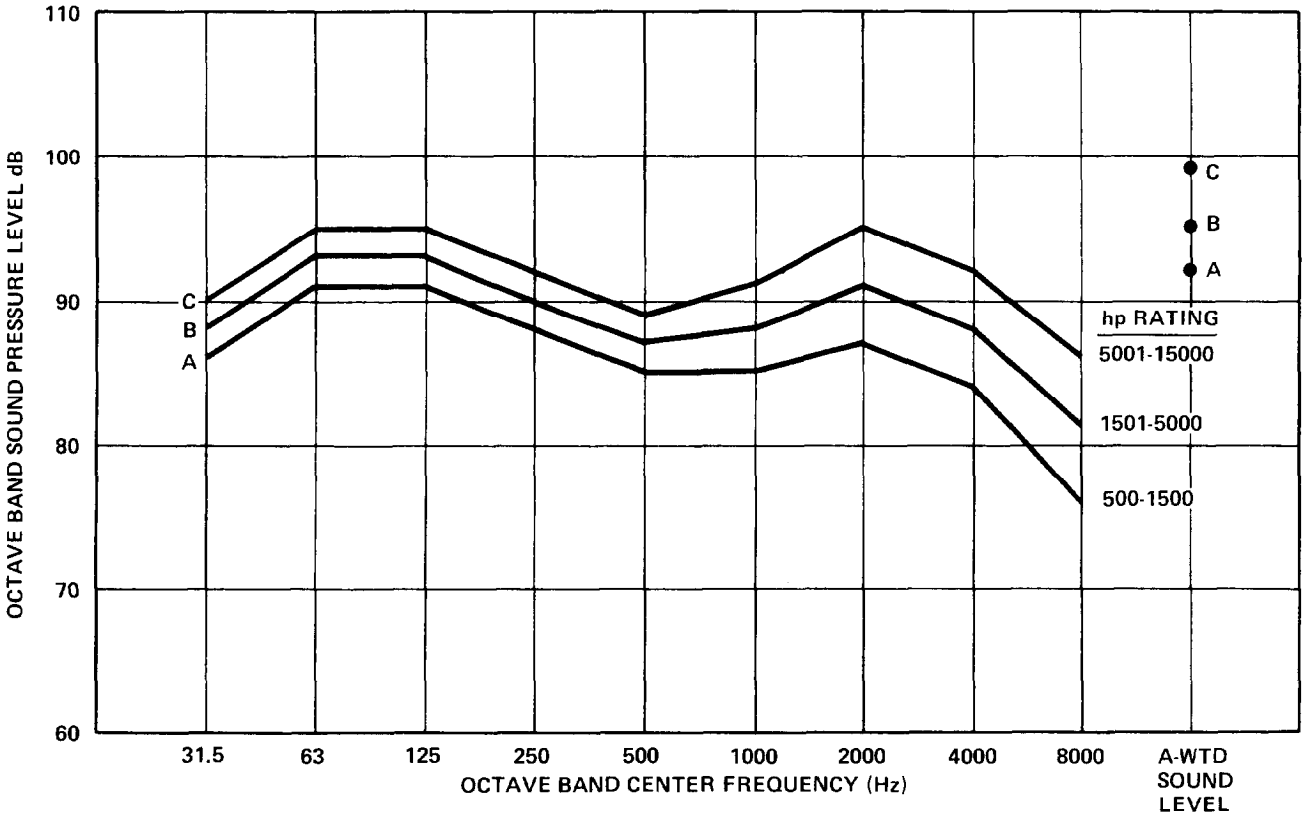

Figure C-8. Sound Pressure Levels of Steam Turbines at 3 ft. Distance.

Table C-26. Sound Pressure Levels (in dB at 3 ft distance) for steam turbines.

Octave Frequency Band (Hz)	Steam Turbine Power Range		
	500-1500 hp (dB)	1501-5000 hp (dB)	5001-15000 hp (dB)
31	86	88	90
63	91	93	95
125	91	93	95
250	88	90	92
500	85	87	89
1000	85	88	91
2000	87	91	95
4000	84	88	92
8000	76	81	86
A-weighted, dB(A)	92	95	99

Table C-27. Approximate Sound Pressure Levels (in dB at 3-ft. Distance) for Gears, in the 125-through 8000-Hz Octave Bands, from Equation C-16.

Deduct 6 dB for 31-Hz band
Deduct 3 dB for 63-Hz band

Speed of Slower Gear Shaft (rpm)	Power Rating of Gear					
	50 hp (dB)	100 hp (dB)	200 hp (dB)	500 hp (dB)	1000 hp (dB)	2000 hp (dB)
600	93	94	95	97	98	99
1200	94	95	96	98	99	100
1800	95	96	97	99	100	101
2400	95	96	97	99	100	101
3600	95	97	98	100	101	102
4800	96	97	98	100	101	102

Table C-28. Approximate Overall PWL (in dB) of Generators, Excluding the Noise of the Driver Unit.

Generator Speed, (rpm)	Electrical Power Rating of Generator							
	0.2 MW (dB)	0.5 MW (dB)	1 MW (dB)	2 MW (dB)	5 MW (dB)	10 MW (dB)	20 MW (dB)	50 MW (dB)
600	95	99	102	105	109	112	115	119
1200	97	101	104	107	111	114	117	121
1800	98	102	105	108	112	115	118	122
2400	99	103	106	109	113	116	119	123
3600	100	104	107	110	114	117	120	124
4800	101	105	108	111	115	118	121	125

Table C-29. Frequency Adjustments (in dB) for Generators, Without Drive Unit.

Octave Frequency Band (Hz)	Value to be Subtracted From Overall SPL (dB)
31	11
63	8
125	7
250	7
500	7
1000	9
2000	11
4000	14
8000	19
A-weighted, dB(A)	4

Table C-30. Octave-Band Corrections (in dB) to be Used in Equation C-17 for Obtaining PWL of Transformers in Different Installation Conditions.

Octave Frequency Band (Hz)	Octave Band Corrections, in dB		
	C_1, see Note 1	C_2, see Note 2	C_3, see Note 3
31	-1	-1	-1
63	+5	+8	+8
125	+7	+13	+13
250	+2	+8	+12
500	+2	+8	+12
1000	-4	-1	+6
2000	-9	-9	+1
4000	-14	-14	-4
8000	-21	-21	-11

Note 1. Use C_1 for outdoor location or for indoor location in a large mechanical equipment room (over about 5000 ft.^{3}) containing many other pieces of mechanical equipment that serve as obstacles to diffuse sound and breakup standing waves.

Note 2. Use C_2 for indoor locations in transformer vaults or small rooms (under about 5000 ft.^{3}) with parallel walls and relatively few other large-size obstacles that can diffuse sound and breakup standing waves.

Note 3. Use C_3 for any location where a serious noise problem would result if the transformer should become noisy above its NEMA rating, following its installation and initial period of use.

GLOSSARY

Absorption
Conversion of acoustic energy to heat energy or another form of energy within the medium of sound-absorbing materials.

Absorption Coefficient
The ratio of sound energy absorbed by the acoustical material to that absorbed by a perfect absorptive material. It is expressed as a decimal fraction.

Average Sound Level and Average SPL
The arithmetic average of several related sound levels (or SPL in a specified frequency band) measured at different positions or different times, or both.

A-Weighting (dBA)
A frequency response characteristic incorporated in sound-level meters and similar instrumentation. The A-weighted scale response de-emphasizes the lower frequencies and is therefore similar to the human hearing.

Background Noise
The total noise produced by all other sources associated with a given environment in the vicinity of a specific sound source of interest, and includes any Residual Noise.

Decibel (dB)
A unit for expressing the relative power level difference between acoustical or electrical signals. It is ten times the common logarithm of the ratio of two related quantities that are proportional to power.

Field Sound Transmission Class (FSTC)
A single-number rating derived from measured values of field sound transmission loss in accordance with ASTM E-413, “Rating Sound Insulation”, and ASTM E-336, “Measurement of Airborne Sound Insulation in Buildings”. It provides an estimate of the performance of actual partitions in place and takes into account acoustical room effects.

Field Sound Transmission (FSTL)
The sound loss through a partition installed in a building, in a Loss specified frequency band. It is the ratio of the airborne sound power incident on the partition to the sound power transmitted by the partition and radiated on the other side, expressed in decibels.

Frequency (Hz)
The number of cycles occurring per second. (Hertz is a unit of frequency, defined as one cycle per second).

Noise
Any unwanted sound that can produce undesirable effects or reactions in humans.

Noise Criteria (NC)
Octave band curves used to define acceptable levels of mechanical equipment noise in occupied spaces. Superseded by the Room Criteria (RC).

Noise Isolation Class (NIC)
A single-number rating derived from measured values of noise reduction, as though they were values of transmission loss, in accordance with E-413. It provides an estimate of the sound isolation between two enclosed spaces that are acoustically connected by one or more paths.

Octave Band
A range of frequencies whose upper band limit frequency is nominally twice the lower band limit frequency.

Octave-Band Sound Level
The integrated sound pressure level of only those sin-wave Pressure components in a specified octave band, for a noise or sound having a wide spectrum.

Residual Noise
The measured sound level which represents the summation of the sound from all the discrete sources affecting a given site at a given time, exclusive of the Background Noise or the sound from a Specific Sound Source of interest. In acoustics, residual noise often is defined as the sound level exceeding 90% of a noise monitoring period.

Room Criteria (RC)
Octave band criteria used to evaluate acceptable levels of mechanical equipment noise in occupied spaces.

Sound Power level (Lw or PWL)
Ten times the common logarithm of the ratio of the total acoustic power radiated by a sound source to a reference power. A reference power of a picowatt or 10-12 watt is conventionally used.

Sound Pressure Level (Lp or SPL)
Ten times the common logarithm to the base 10 of the ratio of the mean square sound pressure to

the square of a reference pressure. Therefore, the sound pressure level is equal to 20 times the common logarithm of the ratio of the sound pressure to a reference pressure (20 micropascals or 0.0002 microbar).

Sound Transmission Class (STC)

A single-number rating derived from measured values of transmission loss in accordance with ASTM E-413, "Classification for Rating Sound Insulation" and ASTM E-90, "Test Method for Laboratory Measurement of Airborne Sound Transmission Loss of Building Partitions". It is designed to give an estimate of the sound insulation properties of a partition or a rank ordering of a series of partitions.

Sound Transmission Loss (TL)

A measure of sound insulation provided by a structural configuration. Expressed in decibels, it is ten times the common logarithm of the sound energy transmitted through a partition, to the total energy incident upon the opposite surface.

BIBLIOGRAPHY

Harris, Cyril M., *Noise Control in Buildings,* McGraw-Hill, New York, NY 1994

Jones, Robert S., *Noise & Vibration Control in Buildings,* McGraw-Hill, New York, NY 1984

Fry, Alan, *Noise Control in Building Services,* Pergamon Press, New York, NY 1988

Bies, David A. & Hansen, *C.* H., *Engineering Noise Control,* Unwin Hyman, Boston, MA 1988

Harris, Cyril M., *Shock & Vibration Handbook,* 3rd Edition, McGraw-Hill, New York, NY 1988

Beranek, Leo L. & Ver, Istvan L., *Noise and Vibration Control Engineering,* John Wiley & Sons, New York, NY 1992

Beranek, Leo L., *Noise & Vibration Control,* The Institute of Noise Control Engineering, Washington, DC, 1988

Schaffer, Mark E., *A Practical Guide to Noise and Vibration Control for HVAC Systems,* the American Society of Heating, Refrigerating, and Air-Conditioning Engineers, Inc., Atlanta, GA 1991

The proponent agency of this publication is the Office of the Chief of Engineers, United States Army. Users are invited to send comments and suggested improvements on DA Form 2028 (Recommended Changes to Publications and Blank Forms) to HQUSACE (CEMP-ET), WASH, DC 20314-1000.

By Order of the Secretary of the Army:

GORDON R. SULLIVAN
General, United States Army
Chief of Staff

Official:

JOEL B. HUDSON
Acting Administrative Assistant to the Secretary of the Army

Official:

JAMES E. MCCARTHY
Maj. General, USAF
The Civil Engineer

Distribution:

Army: To be distributed in accordance with DA Form 12-34-E, Block 0718, requirements for TM 5-805-4.

Air Force: F

***U.S. G.P.O.:1995-386-731:266**