AIRCRAFT CHARACTERISTICS FOR AIRFIELD-HELIPORT DESIGN AND EVALUATION

AIRCRAFT TURNING DIAGRAMS

D-l. This appendix presents various turning diagrams for US Army, US Air Force, and numerous civil and comercial fixed-wing aircraft. Aircraft turning capabilities and maneuvering characteristics are provided for planners and civil engineers in the layout and design of airfield systems. Travel geometry data are illustrated for various aircraft components (gear, wing tip, tail, etc.). Turning data are from information provided by Air Logistics Center managers and aircraft manufacturers.

D-2. Turning diagrams are arranged in figure format for various military, civil, and commercial fixed-wing aircraft (fig. D-l to D-110). Diagrams are grouped by military aircraft (figs D-l to D-47) and civil and commercial aircraft (figs D-48 to D-llO). Military aircraft are further subgrouped as follows:

a. Bomber Aircraft.

Figure	Aircraft
D-l	B-lB
D-2	B-52G/H
D-3	FB-111A

b. Cargo/Transport Aircraft.

Figure	Aircraft
D-4	C-5A/B
D-5	C-9A
D-6	C-12A/C/D/F
D-7	C-12J
D-8	C-21A
D-9 and D-10	C-22B
D-11	C-23A
D-12	C-130B/E/H
D-13	C-135B and KC-135R
D-14 and D-15	C-137B
D-16 and D-17	C-137C
D-18	C-140A/B
D-19	C-141A
D-20	C-141B
D-21	KC-10A
D-22	VC-25A

c. Special-Duty Aircraft.

Figure	Aircraft
D-23	E-3A/B/C
D-24	E-4A/B
D-25 and D-26	EC-18B
D-27	EC-130E/H, MC-130E/H and WC-130E/H
D-28	EC-135A/C/E/G/H/J/K/L/P/Y, RC-135M/S/U/V/W, and WC-135B
D-29	EF-111A
D-30	OA-37B
D-31	OV-1B/C/D
D-32	OV-10A
D-33	RC-12D/G/H/K and U-21J
D-34	RF-4C
D-35	UV-18

d. Tactical Aircraft.

Figure	Aircraft
D-36	A-7D/K
D-37	A-10A
D-38	A-37B
D-39	AC-130A/H/U
D-40	F-4C
D-41	F-4D/E/G
D-42	F-5E/F
D-43	F-15A/B/C/D/E
D-44	F-16A/B/C/D
D-45	F-100
D-46	F-106A/B
D-47	F-111A/D/E/F

D-3. Turning diagrams for civil and commercial aircraft are as follows:

Figure	Aircraft
D-48	DeHavilland Canada DHC-6
D-49	Short Brothers SC.7 and SC.7-3M
D-50	Short Brothers 330 and 330-200
D-5l	Short Brother. 360
D-52	Convair 240/600
D-53	Convair 340/440/580/640
D-54	Lockheed L-188
D-55	Lockheed L-382 (L-100-20 and L-l00-30)
D-56	Gates Learjet 24
D-57	Gates Learjet 25
D-58	Gates Learjet 35 and 36
D-59	Lockheed 1329
D-60 and D-61	Boeing 707-120B
D-62 and D-63	Boeing 707-320/-320B/-320C/-420
D-64 and D-65	Boeing 720 and 720B
D-66	Boeing 727-100/-100C
D-67	Boeing 727-200
D-68	Boeing 727-100/-100C/-200
D-69	Boeing 737-100
D-70	Boeing 737-200
D-71	Boeing 737-100/-200
D-72	Boeing 737-300
D-73	Boeing 737-400
D-74	Boeing 737-300/-400

Figure	Aircraft
D-75	Boeing 747-100B/-200B-Pass/ -200C-Pass/-200C-Cargo/ -200F-Cargo/-300-Pass
D-76	Boeing 747-400
D-77	Boeing 747SP
D-78 and D-79	Boeing 757-200
D-80	Boeing 767-200/-200ER
D-81	Boeing 767-300/-300ER
D-82	Boeing 767-200/-200ER/-300/ -30011.
D-83	Lockheed L-1011-l/-100/-200
D-84	Lockheed L-1011-500 and L-1011-500 Extended Wing
D-85	Lockheed L-1011-1/-100/-200/ -500/-500 Extended Wing
D-86 and D-S7	McDonnell Douglas DC-8-43/-55/ -55F
D-88 and D-89	McDonnell Douglas DC-8-61/-61F/ -71/-71F
D-90 and D-91	McDonnell Douglas DC-8-62/-62F/ -72/-72F
D-92 and D-93	McDonnell Douglas DC-8-63/-63F/ -73/-73F
D-94	McDonnell Douglas DC-9-15/-15F
D-95	McDonnell Douglas DC-9-21
D-96	McDonnell Douglas DC-9-32/-33F
D-97	McDonnell Douglas DC-9-41
D-98	McDonnell Douglas DC-9-51
D-99	McDonnell Douglas DC-9-15/ -15F/-21/-32/-33F/-41/-51
D-100 and D-l0l	McDonnell Douglas MD-81/-82/ -83/-88
D-102 and D-103	McDonnell Douglas MD-87
D-104 and D-105	McDonnell Douglas DC-b-b
D-106 and D-107	McDonnell Douglas DC-lO-30 and DC-l0-40
D-108	B.A.C. One-Eleven Model 200, 400, and 500
D-109 and D-ll0	B.A.C./SNIAS Concorde

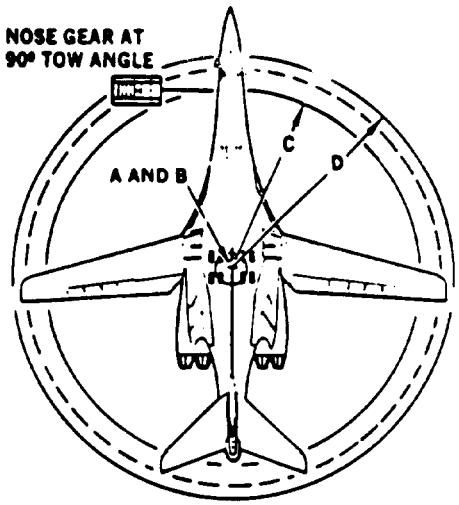

TOW TURN

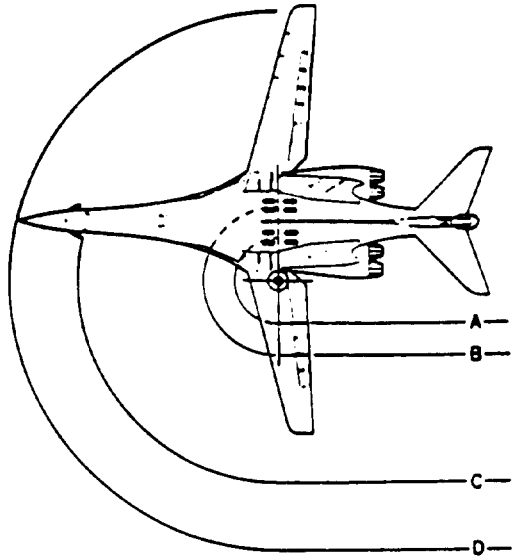

TAXI AND TAKEOFF/LANDING TURN

NOTES: 1. ENSURE WINGS ARE SWEPT FORWARD PRIOR TO TOWING.

2. PIVOT POINTS: TAXI TURN - 9.7 FEET FROM NEAREST GEAR.
TAKEOFF/LANDING TURN - 90.5 FEET FROM NEAREST GEAR.

3. DO NOT USE A TURN RADIUS LESS THAN 75 FEET.

TRAVEL MODE	MAXIMUM TURNING SPEED, KNOTS	MINIMUM RADIUS, FEET				MINIMUM TURN SURFACE WIDTH, FEET
		MAIN GEAR		NOSE GEAR	WING TIP	
		A	B	C	D*	
TAXI (73 DEGREES)	2	10.0	24.0	60.0	86.0	90
TAKEOFF/LANDING (30 DEGREES)	15	90.0	105.0	113.0	161.0	225
TOW (90 DEGREES)	5	7.0	7.0	56.0	69.0	70

*WING FULL FORWARD (15 DEGREES)

Figure D-1. B-1B, Minimum Turning Radii

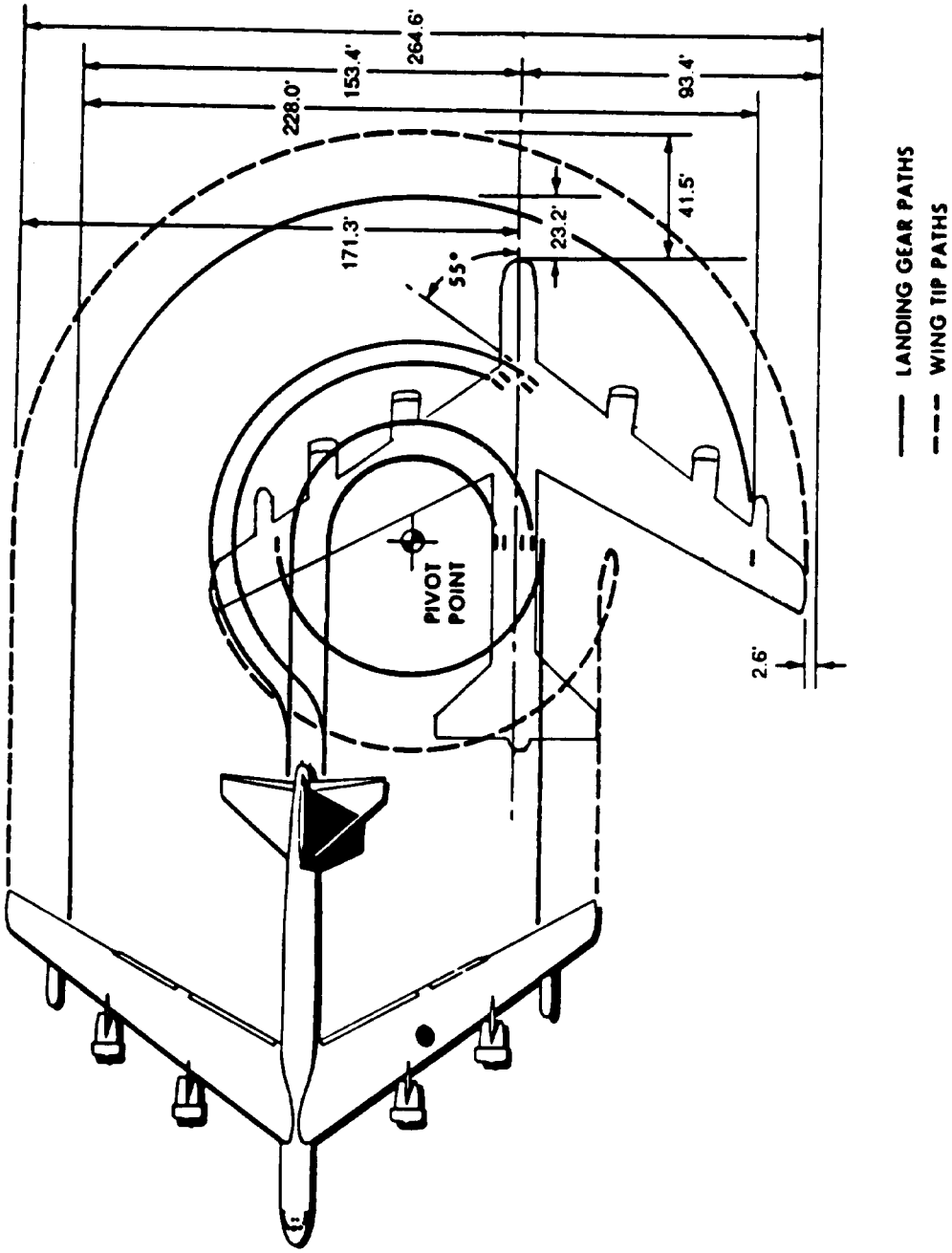

Figure D-2. B-52G/H, Turning Radii

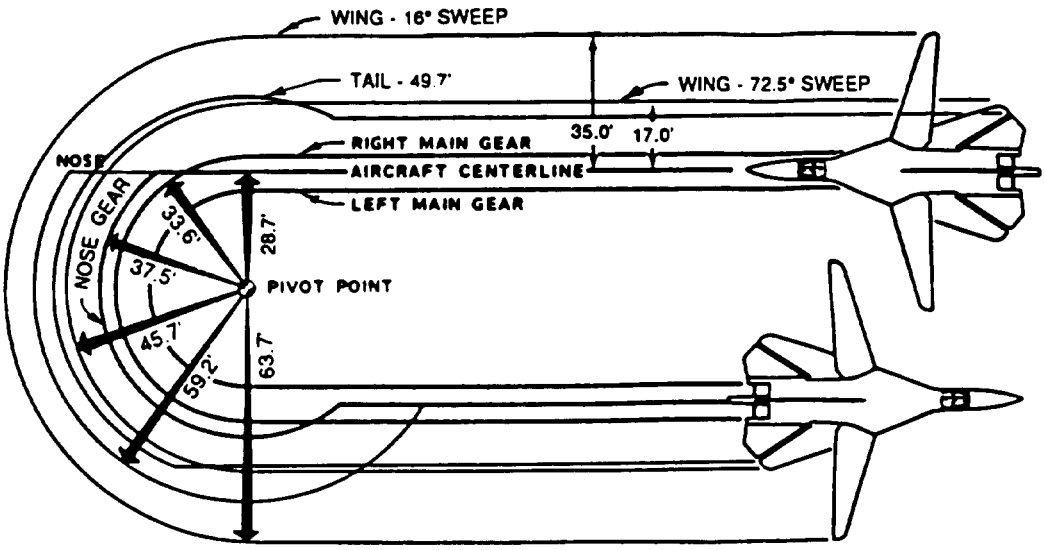

NOTES: 1. PIVOT POINT BASED ON 40 DEGREES NOSE WHEEL STEERING.

2. TURNING DISTANCES ARE BASED ON MINIMUM TAXI SPEED OF 5 KNOTS.

Figure D—3. FB-111A, Minimum Taxi Turn Radii

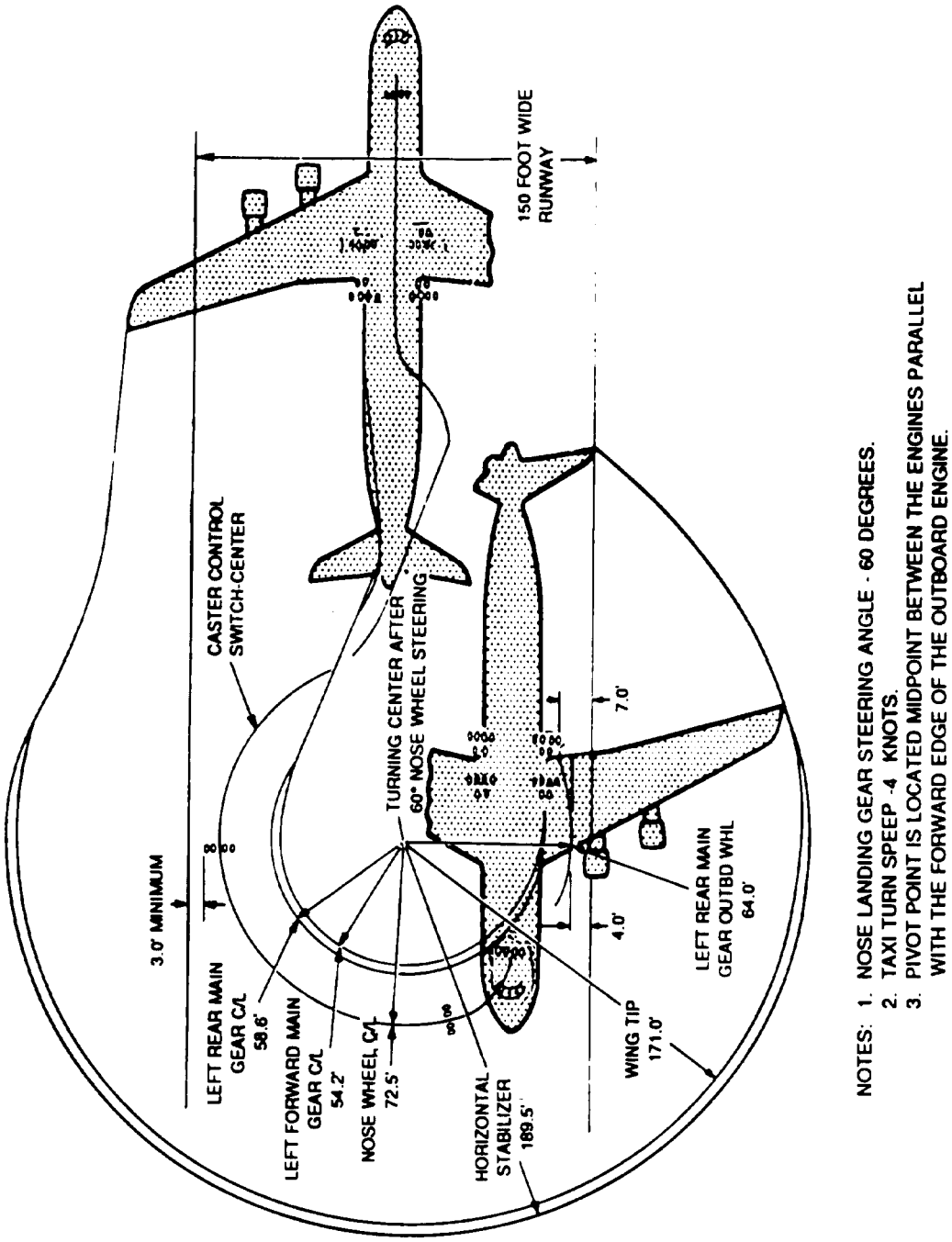

Figure D—4. C-5A/B, Minimum Taxi Turn Radii

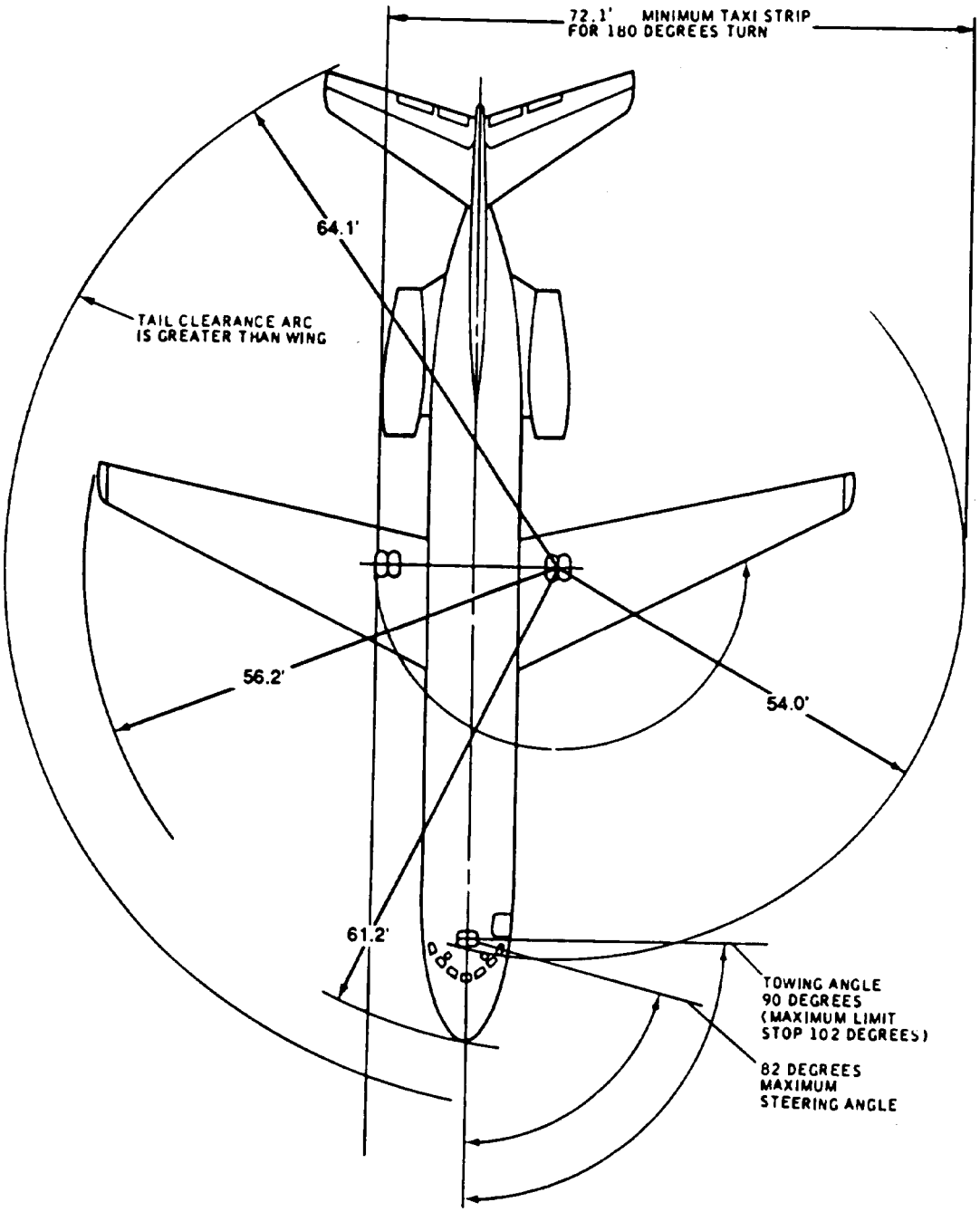

Figure D–5. C–9A, Turning Radii

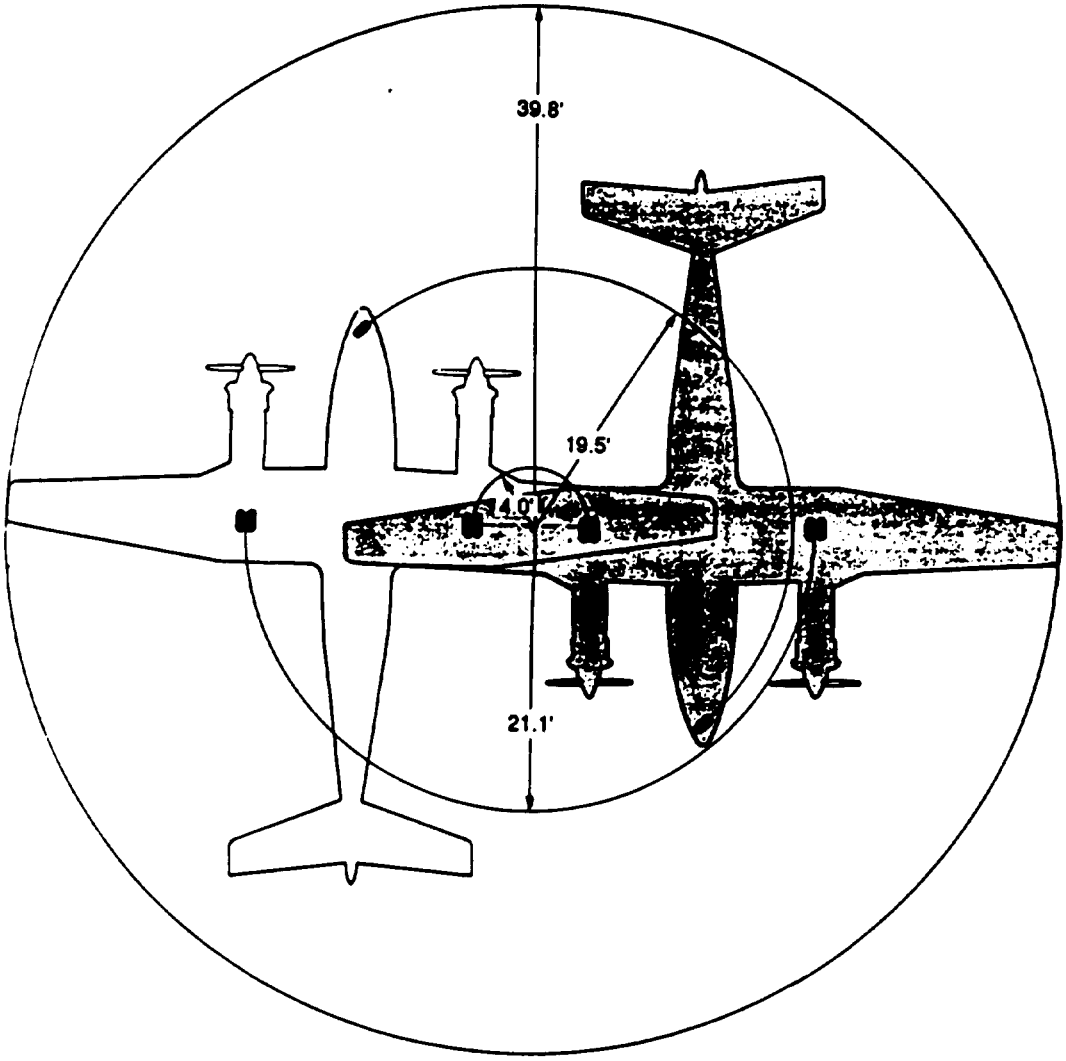

Figure D—6. C-12A/C/D/F, Turning Radii

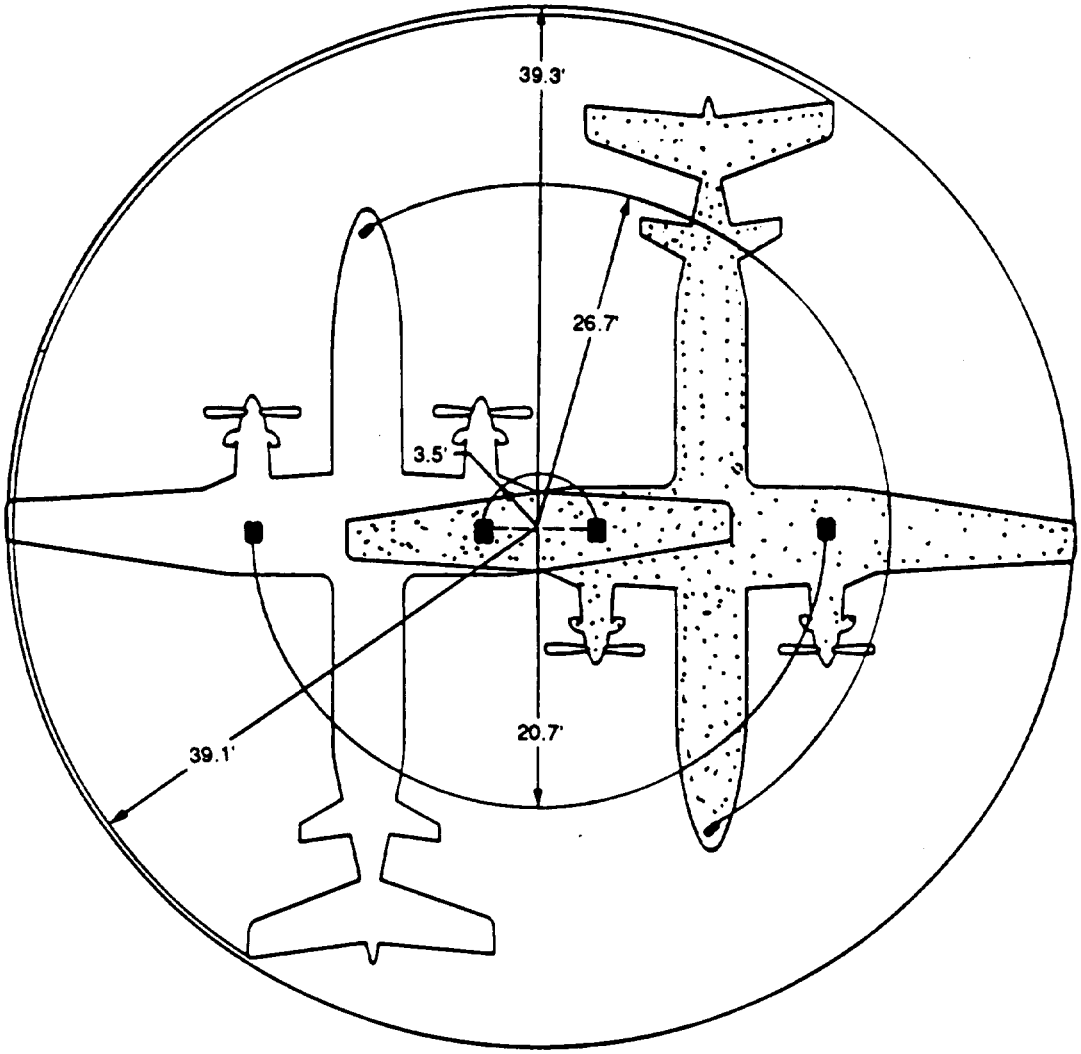

Figure D-7. C-12J, Turning Radii

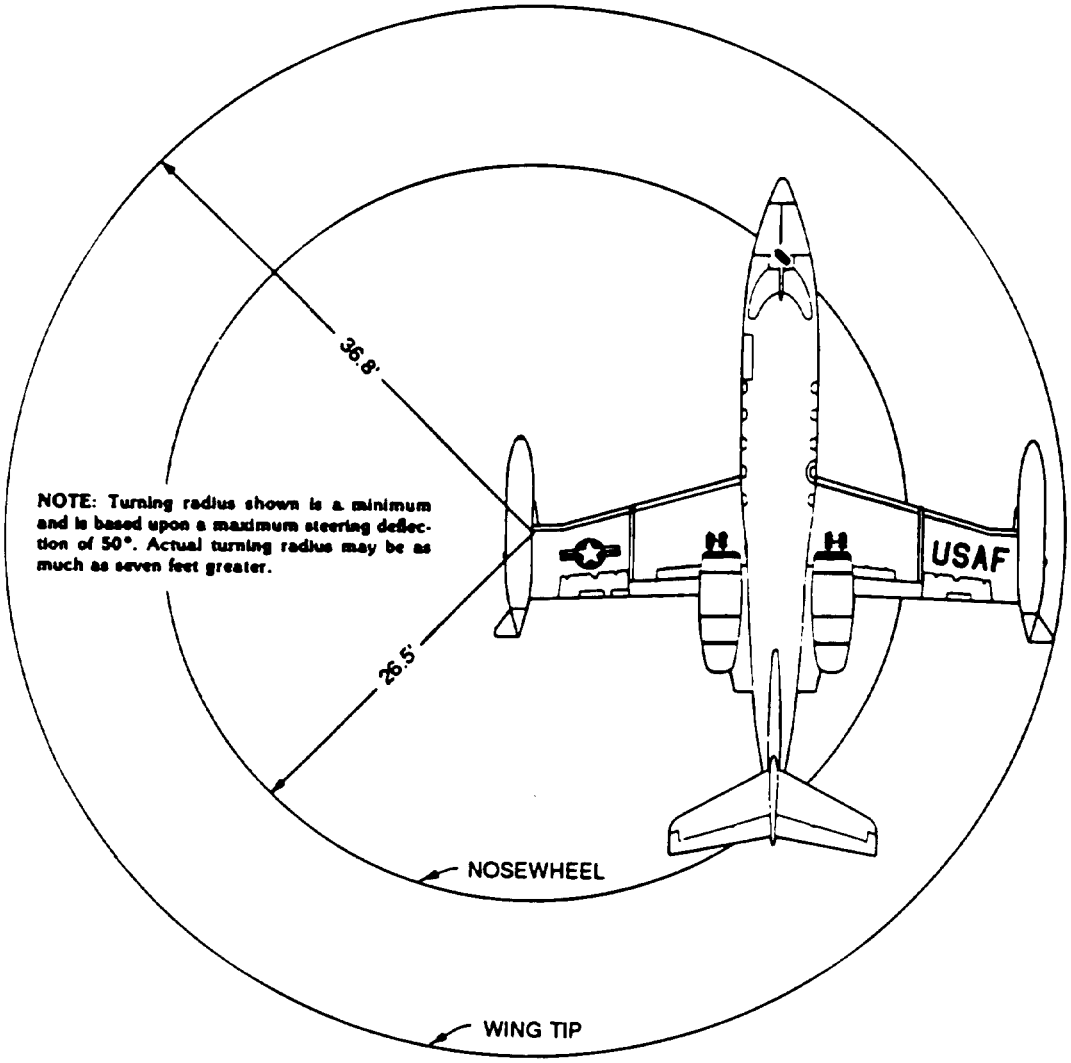

Figure D-8. C—21A, Turning Radii

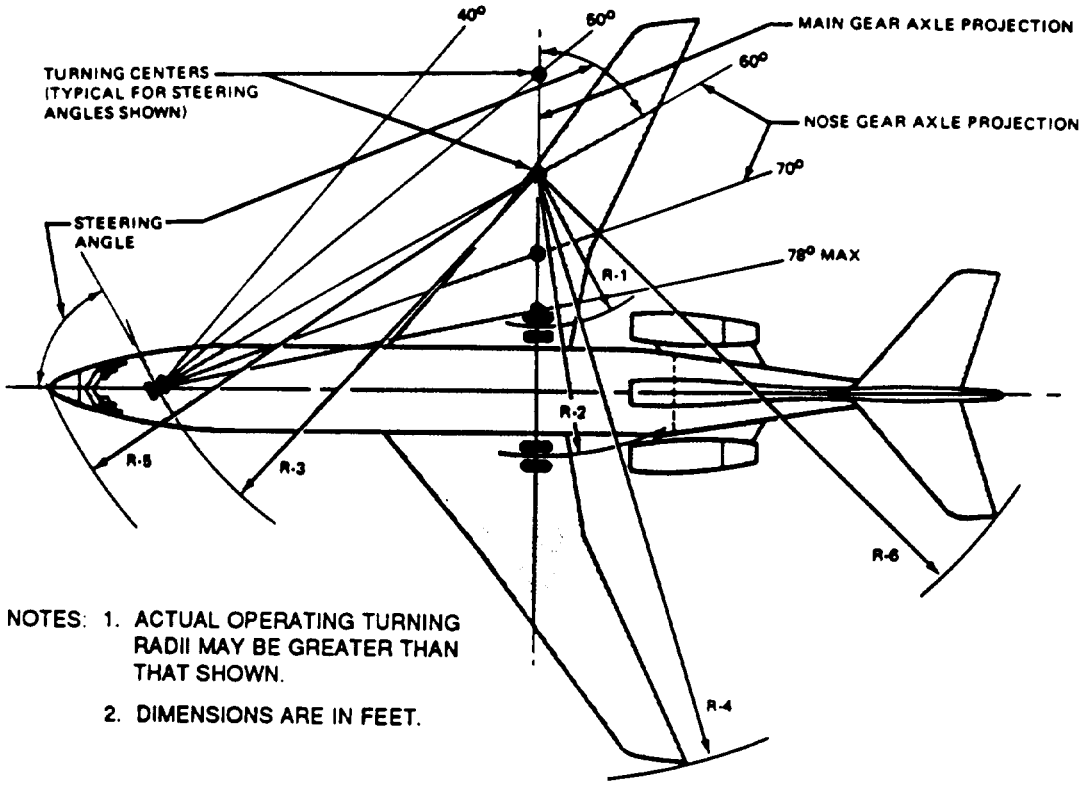

NOTES: 1. ACTUAL OPERATING TURNING RADII MAY BE GREATER THAN THAT SHOWN.

2. DIMENSIONS ARE IN FEET.

STEERING ANGLE (DEGREES)	R-1	R-2	R-3	R-4	R-5	R-6
	INNER GEAR	OUTER GEAR	NOSE GEAR	WING TIP	NOSE	TAIL
30	83	102	106	148	115	127
35	67	86	93	132	102	114
40	54	73	83	120	93	103
45	44	63	75	109	87	96
50	35	54	70	101	82	89
55	28	47	65	94	78	85
60	21	40	62	87	75	80
65	15	34	59	82	73	77
70	10	29	57	77	71	74
75	5	24	55	72	70	72
78 (MAXIMUM)	2	21	54	69	69	71

Figure D—9. C-22B, Turning Radii — No Slip Angle

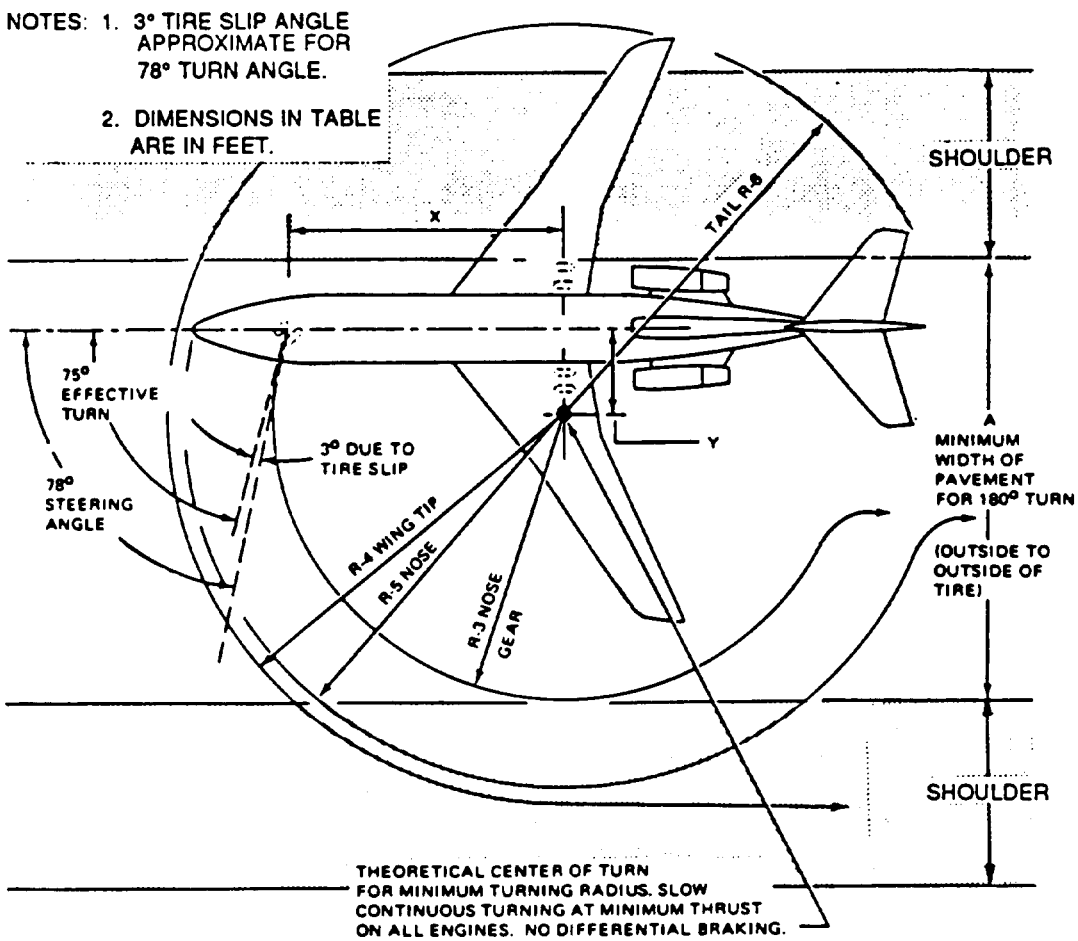

FOR AN EFFECTIVE TURN ANGLE OF 75°						
X	Y	A	R-3	R-4	R-5	R-6
53.3	14.3	82.5	55.0	72.0	70.0	72.0

Figure D-10. C—22B, Minimum Turning Radii — 3° Slip Angle

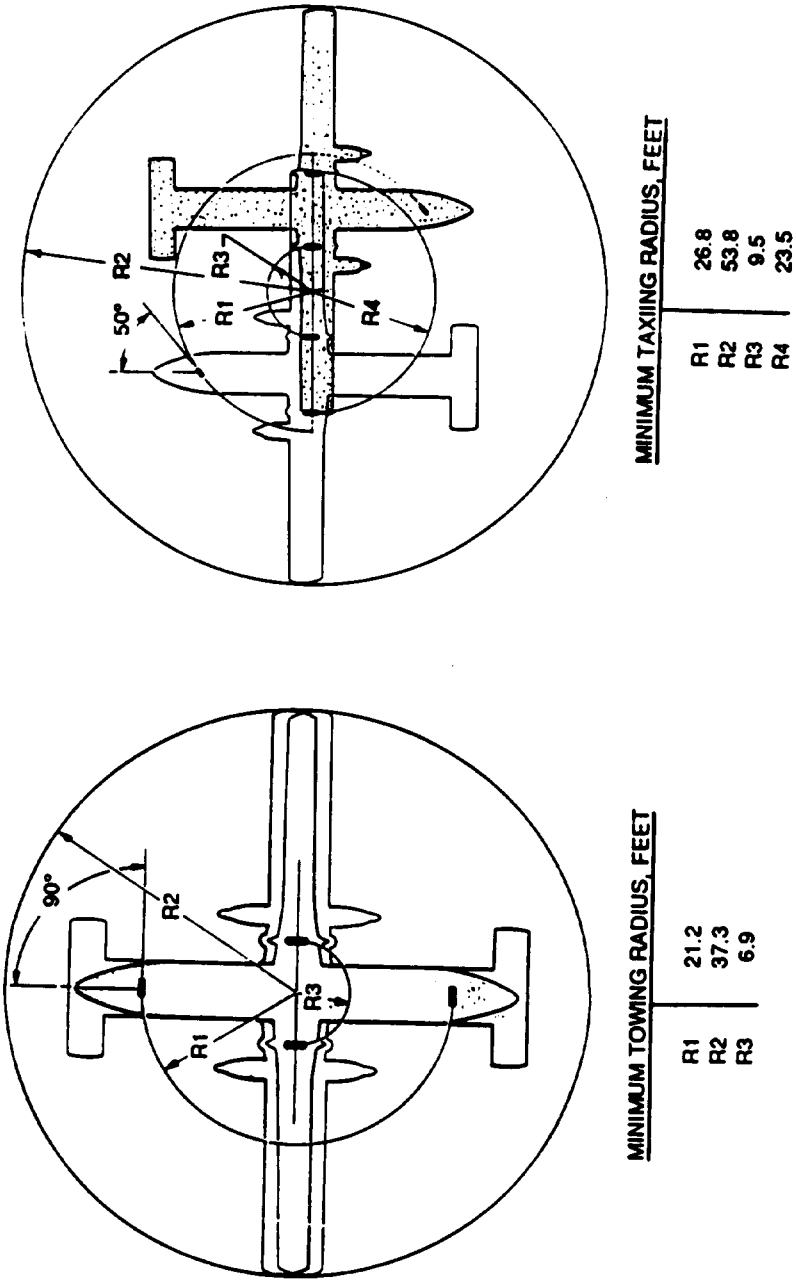

Figure D-11. C—23A, Minimum Turning Radii

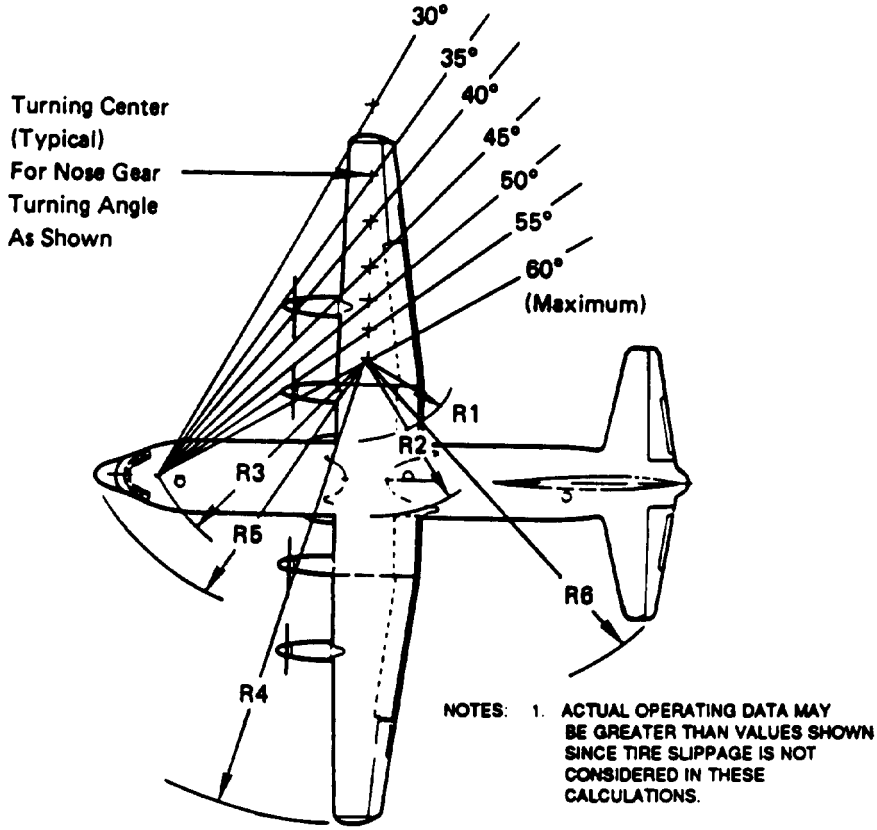

NOTES:
1. ACTUAL OPERATING DATA MAY BE GREATER THAN VALUES SHOWN SINCE TIRE SLIPPAGE IS NOT CONSIDERED IN THESE CALCULATIONS.
2. DIMENSIONS IN TABLE ARE IN FEET.

STEERING ANGLE (DEGREES)	W*	R1	R2	R3	R4	R5	R6
	PVT. WIDTH	INNER GEAR	OUTER GEAR	NOSE GEAR	WING TIP	NOSE	TAIL
30	158	63	77	81	136	88	111
35	135	51	65	71	124	78	100
40	108	41	56	63	114	71	92
45	105	33	48	57	107	66	86
50	94	27	41	53	101	62	81
55	85	21	35	50	95	59	77
60 (MAXIMUM)	77	16	30	47	90	57	74

*W= MINIMUM PAVEMENT WIDTH FOR 180° TURN.

Figure D-12. C-130B/E/H, Turning Radii — No Tire Slippage

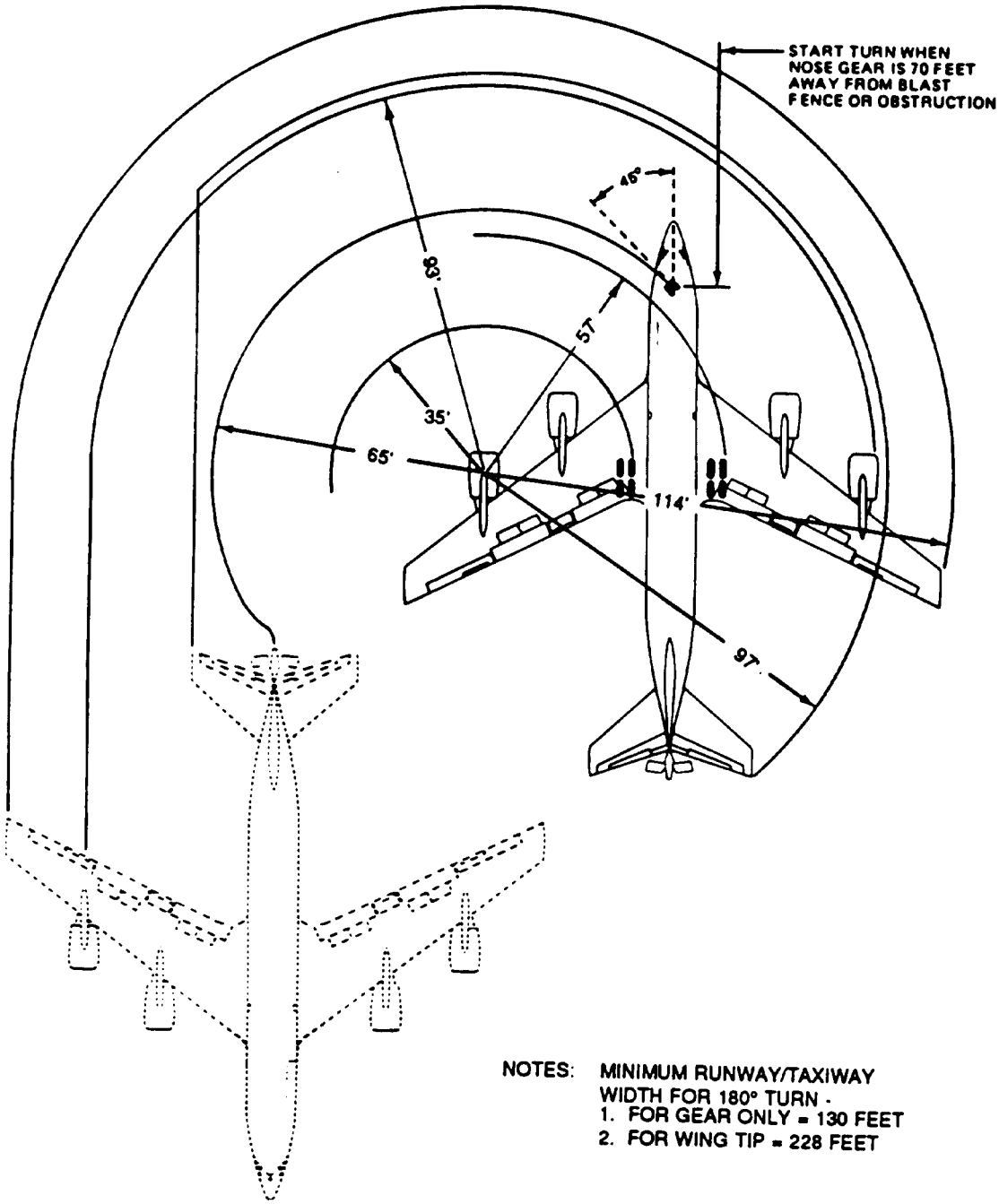

Figure D-13. C-135B and KC-135R,
Minimum Turning Radii

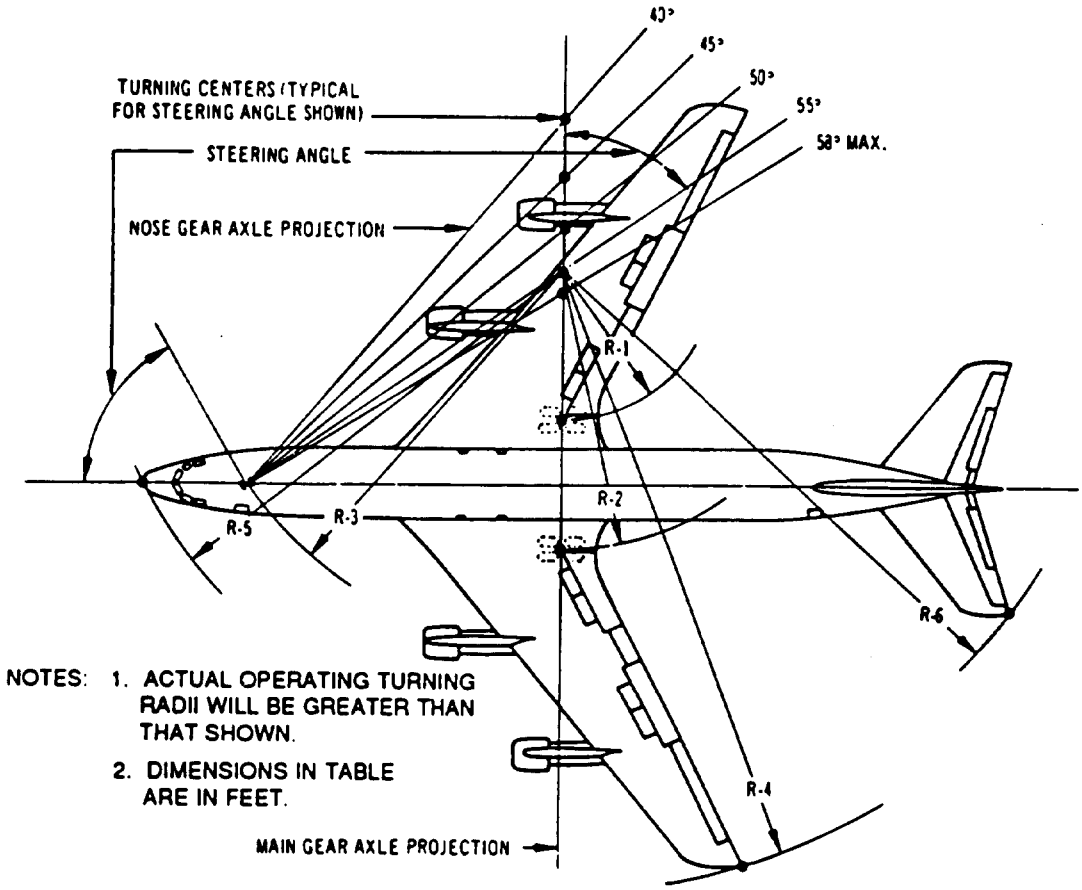

NOTES:
1. ACTUAL OPERATING TURNING RADII WILL BE GREATER THAN THAT SHOWN.
2. DIMENSIONS IN TABLE ARE IN FEET.

STEERING ANGLE (DEGREES)	R-1	R-2	R-3	R-4	R-5	R-6
	INNER GEAR	OUTER GEAR	NOSE GEAR	WING TIP	NOSE	TAIL
30	80	102	105	159	114	136
35	64	86	91	143	102	123
40	51	73	82	132	94	113
45	41	63	74	122	87	105
50	33	55	68	113	82	100
55	26	48	65	107	79	95
58 (MAXIMUM)	22	44	63	103	77	90

Figure D—14. C-137B, Turning Radii — No Slip Angle

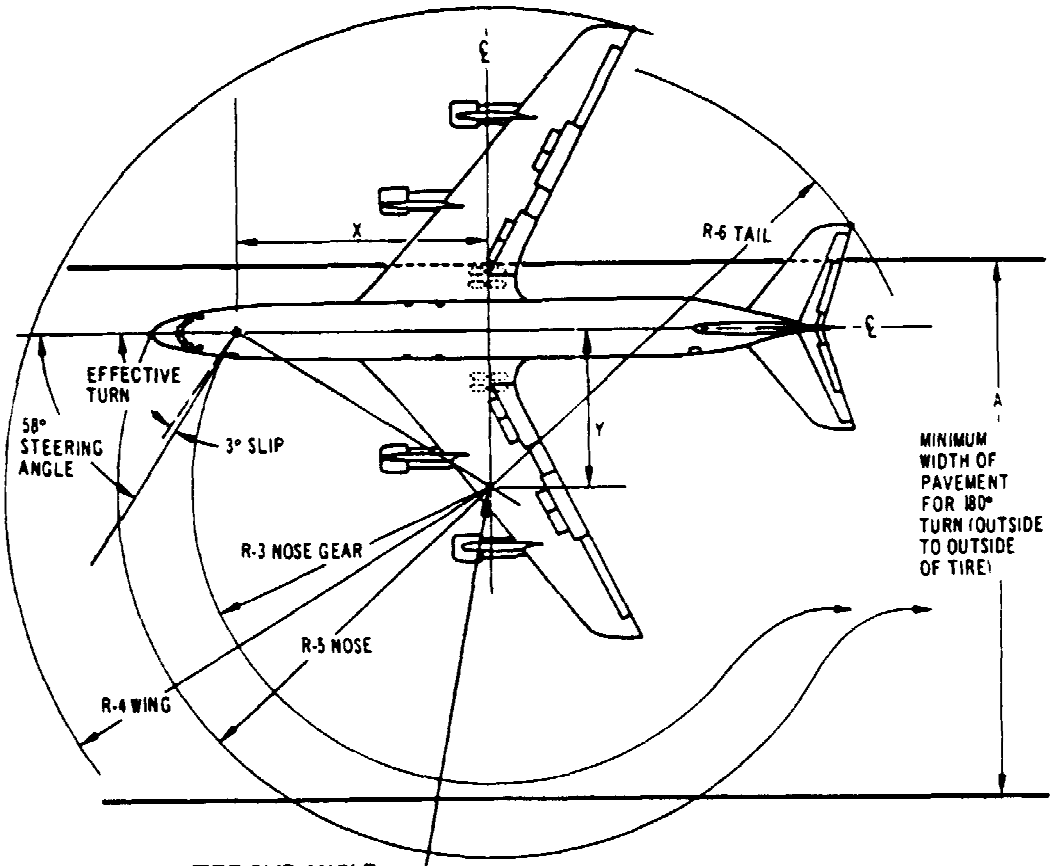

NOTES: 1. 3° TIRE SLIP ANGLE APPROXIMATE FOR 58° TURN ANGLE.

2. DIMENSIONS IN TABLE ARE IN FEET.

THEORETICAL CENTER OF TURN FOR MINIMUM TURNING RADIUS. SLOW CONTINUOUS TURNING WITH APPROXIMATELY IDLE THRUST ON ALL ENGINES. NO DIFFERENTIAL BRAKING

FOR AN EFFECTIVE TURN ANGLE OF 55°						
X	Y	A	R-3	R-4	R-5	R-6
52.3	36.6	116.2	65.0	107.0	79.0	95.0

Figure D-15. C-137B, Minimum Turning Radii — 3° Slip Angle