MAIN ROTOR BLADES, NO.	MAXIMUM TIRE PRESSURE, PSI		A	B	C	D	E	F	G	H	J
	FORWARD GEAR	AFT GEAR									
3*	150	150	50.0	83.3	16.9	24.9	12.9	33.3	63.7	50.0**	15.0††

* THREE BLADES EACH ON 2 ROTORS.
** TAIL ROTOR IS HORIZONTAL.
†† DIMENSION FOR FORWARD ROTOR HEAD AFT ROTOR HEAD DIMENSION IS 16.9 FT.

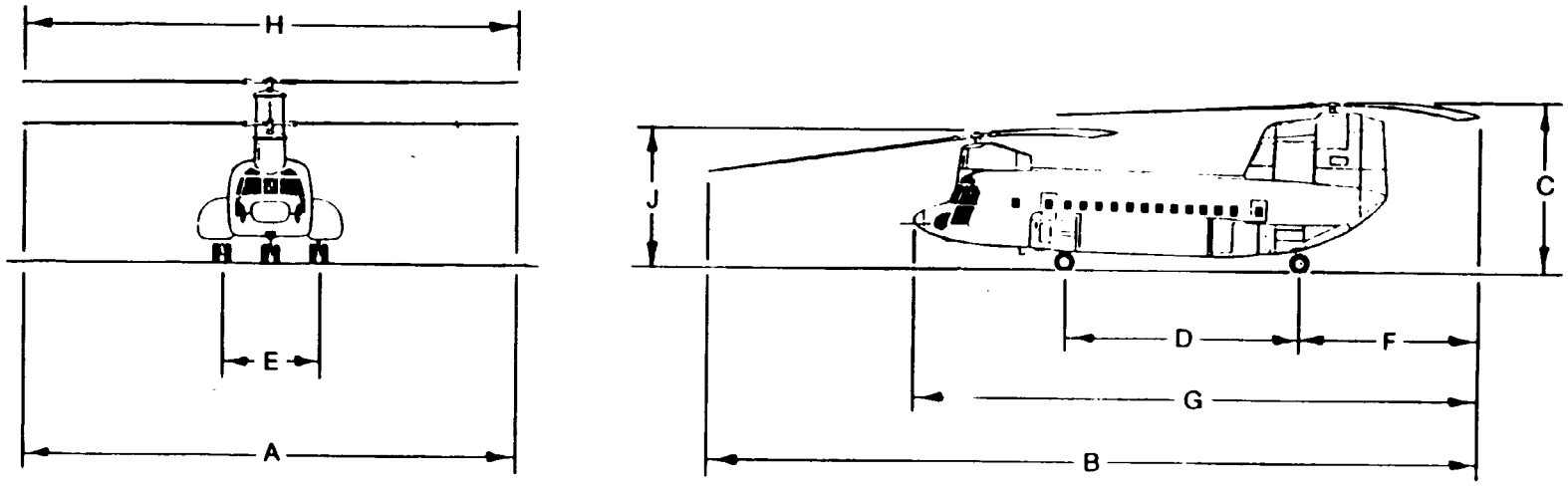

Figure C-139. Boeing 107-II

MAIN ROTOR BLADES, NO.	MAXIMUM TIRE PRESSURE, PSI		A	B	C	D	E	F	G	H	J
	FORWARD GEAR	AFT GEAR									
3*	**	**	60.0	99.0	18.7	22.5	10.5	33.4	74.6	60.0††	15.3‡

* THREE BLADES EACH ON 2 ROTORS.

** TIRE PRESSURES FOR CH-47B, CH-47C, AND CH-47D ARE 67, 88, AND 124 PSI; RESPECTIVELY.

†† TAIL ROTOR IS HORIZONTAL.

‡ DIMENSION FOR FORWARD ROTOR HEAD. AFT ROTOR HEAD DIMENSION IS 18.7 FT

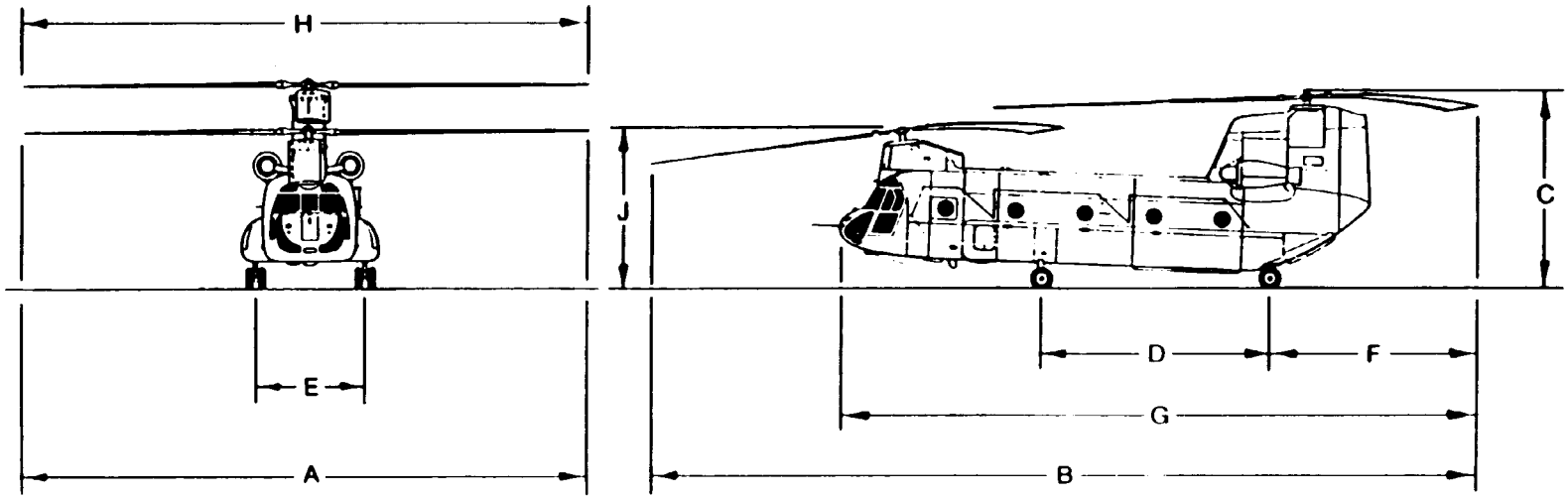

Figure C-140. Boeing 114 (CH-47B/C/D), Chinook

MAIN ROTOR BLADES, NO.	MAXIMUM TIRE PRESSURE, PSI		A	B	C	D	E	F	G	H	J
	FORWARD GEAR	AFT GEAR									
3*	124	104	60.0	99.0	18.7	25.8	10.5	33.4	74.6	60.0**	15.3††

* THREE BLADES EACH ON 2 ROTORS.
** TAIL ROTOR IS HORIZONTAL.
†† DIMENSION FOR FORWARD ROTOR HEAD. AFT ROTOR HEAD DIMENSION IS 18.7 FT.

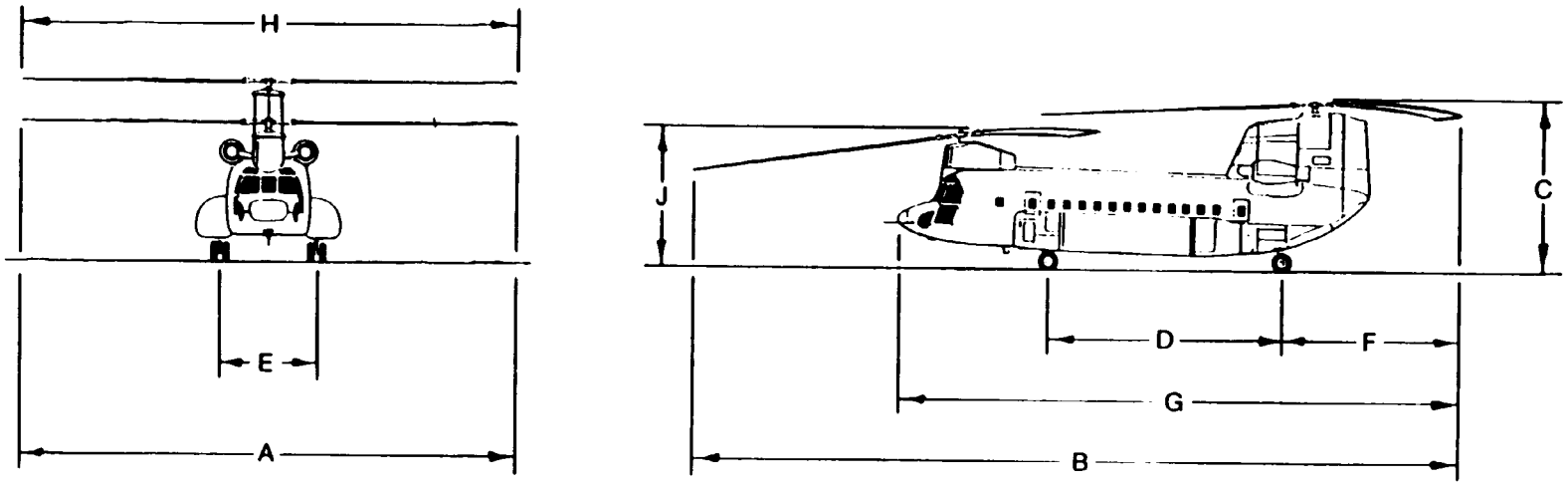

Figure C-141. Boeing 234 LR/ER/UT/MLR

MAIN ROTOR BLADES, NO.	MAXIMUM TIRE PRESSURE, PSI		A	B	C	D	E	F	G	H	J
	FORWARD GEAR	AFT GEAR									
4*	†	†	49.7	83.3	19.6	32.7	11.4	30.4	66.4	49.7**	14.8††

* FOUR BLADES EACH ON 2 ROTORS.
** TAIL ROTOR IS HORIZONTAL.
†† DIMENSION FOR FORWARD ROTOR HEAD. AFT ROTOR HEAD DIMENSION IS 19.6 FT.

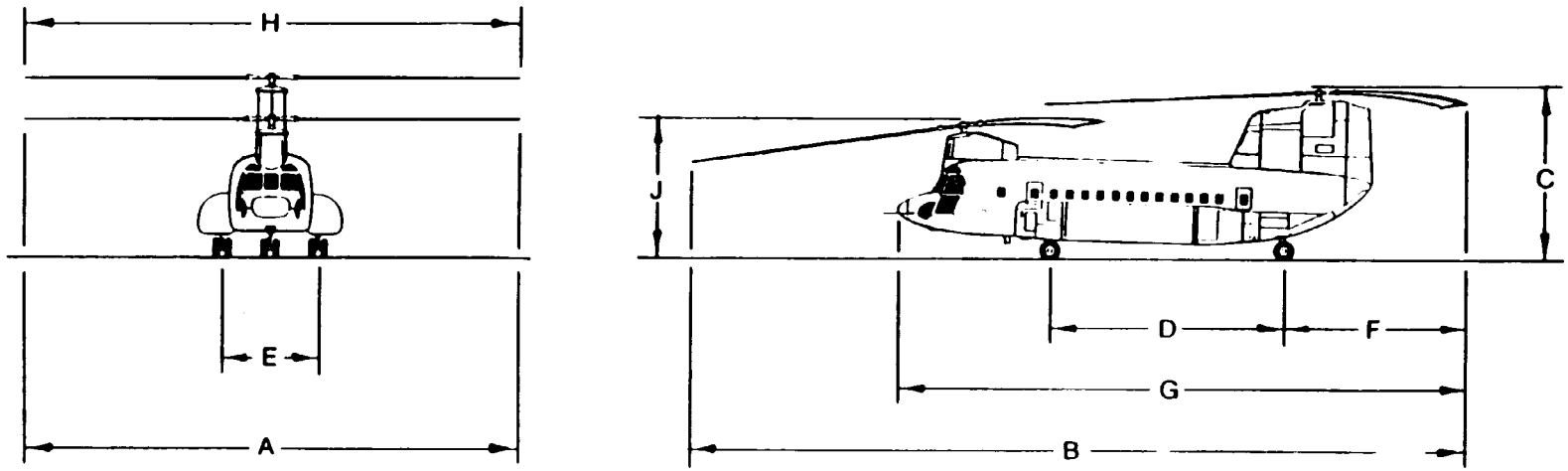

Figure C-142. Boeing 360

MAIN ROTOR BLADES, NO.	MAXIMUM TIRE PRESSURE, PSI		A	B	C	D	E	F	G	H	J
	FORWARD GEAR	AFT GEAR									
5	†	†	61.0	75.3	21.3	22.9	14.1	†	†	13.1	†

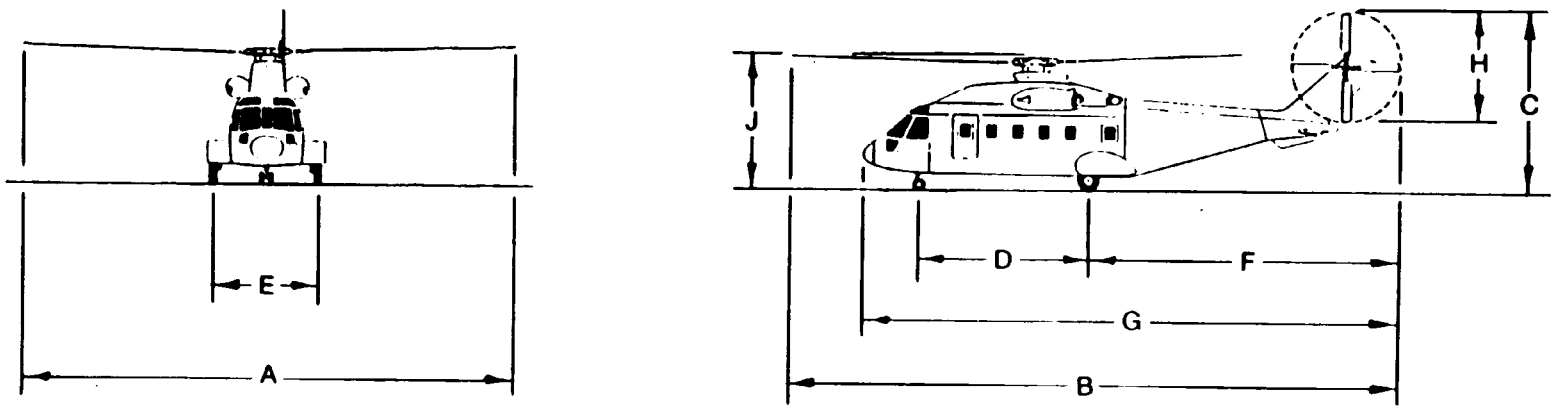

Figure C-143. E.H. Industries EH 101

MODEL	MAIN ROTOR BLADES, NO.	CONTACT AREA, IN^2		A	B	C	D	D1	E	F	G	H	J
		FORWARD	AFT										
280C 280F 280FX	3	†	†	32.0	29.3	9.0	†	8.0	7.4	†	28.7	4.7	9.0
F28C-2 F28F	3	†	†	32.0	29.3	9.0	†	8.0	7.4	†	28.1	4.7	9.0

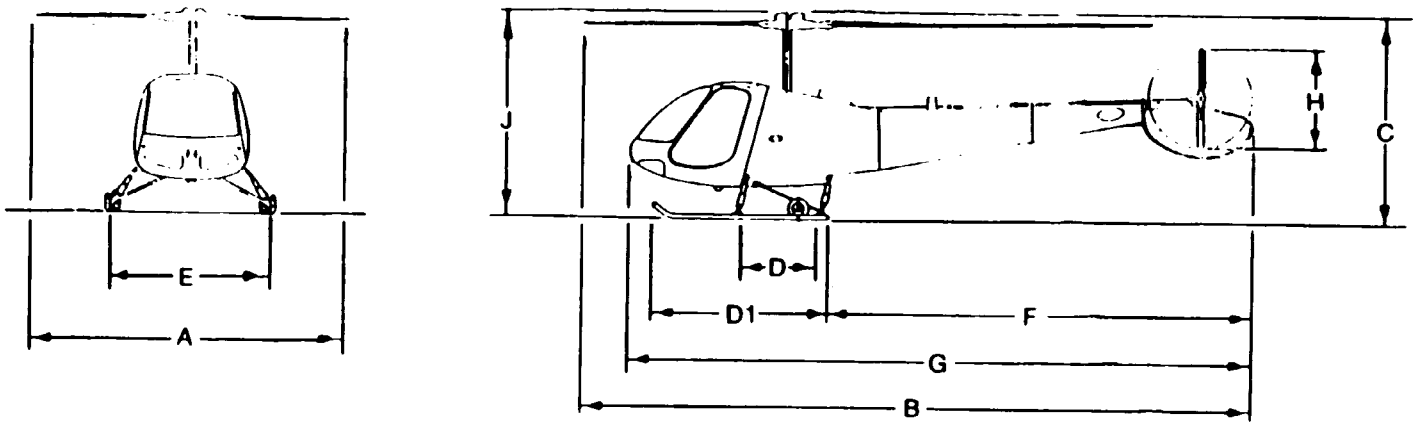

Figure C-144. Enstrom 280C, F28C-2, 280F, and 280FX; Shark and F28F; Falcon

MAIN ROTOR BLADES, NO.	CONTACT AREA, IN^2		A	B	C	D	D1	E	F	G	H	J
	FORWARD	AFT										
3	†	†	23.8	28.0	6.8	†	†	5.7	†	†	4.3	†

SILHOUETTES NOT AVAILABLE

Figure C-145. Hynes H-2/with skid landing gear

MAIN ROTOR BLADES, NO.	MAXIMUM TIRE PRESSURE, PSI		A	B	C	D	E	F	G	H	J
	FORWARD GEAR	AFT GEAR									
3	28	30	23.8	28.0	6.8	7.1	6.9	†	†	4.3	†

SILHOUETTES NOT AVAILABLE

Figure C-146. Hynes H-2/with wheel landing gear

MAIN ROTOR BLADES, NO.	CONTACT AREA, IN^2		A	B	C	D	D1	E	F	G	H	J
	FORWARD	AFT										
3	†	†	28.5	32.9	6.0	†	†	5.7	†	†	4.3	†

SILHOUETTES NOT AVAILABLE

Figure C-147. Hynes H-5/with skid landing gear

MAIN ROTOR BLADES, NO.	MAXIMUM TIRE PRESSURE, PSI		A	B	C	D	E	F	G	H	J
	FORWARD GEAR	AFT GEAR									
3	28	30	28.5	32.9	6.0	7.1	6.9	†	†	4.3	†

SILHOUETTES NOT AVAILABLE

Figure C-148. Hynes H-5/with wheel landing gear

MODEL	MAIN ROTOR BLADES, NO.	CONTACT AREA, IN²		A	B	C	D	D1	E	F	G	H	J
		FORWARD	AFT										
BO 105 CB	4	19.5	19.5	32.3	38.9	12.5	8.3	8.9	8.2	20.5	31.2	6.2	9.8
BO 105 CBS/LS	4	19.5	19.5	32.3	38.9	12.5	8.3	8.9	8.2	20.5	32.0	6.2	9.8

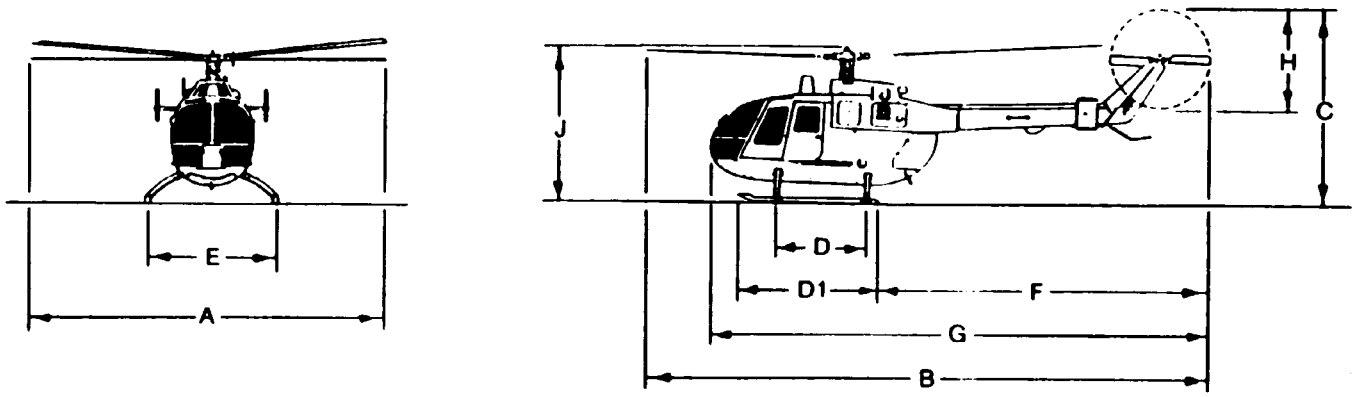

Figure C-149. MBB BO 105 CB/CBS/LS

MAIN ROTOR BLADES, NO.	CONTACT AREA, IN^2		A	B	C	D	D1	E	F	G	H	J
	FORWARD	AFT										
4	31.8	31.8	36.1	42.7	12.6	6.2	10.1	7.9	21.4	35.4	6.4	11.0

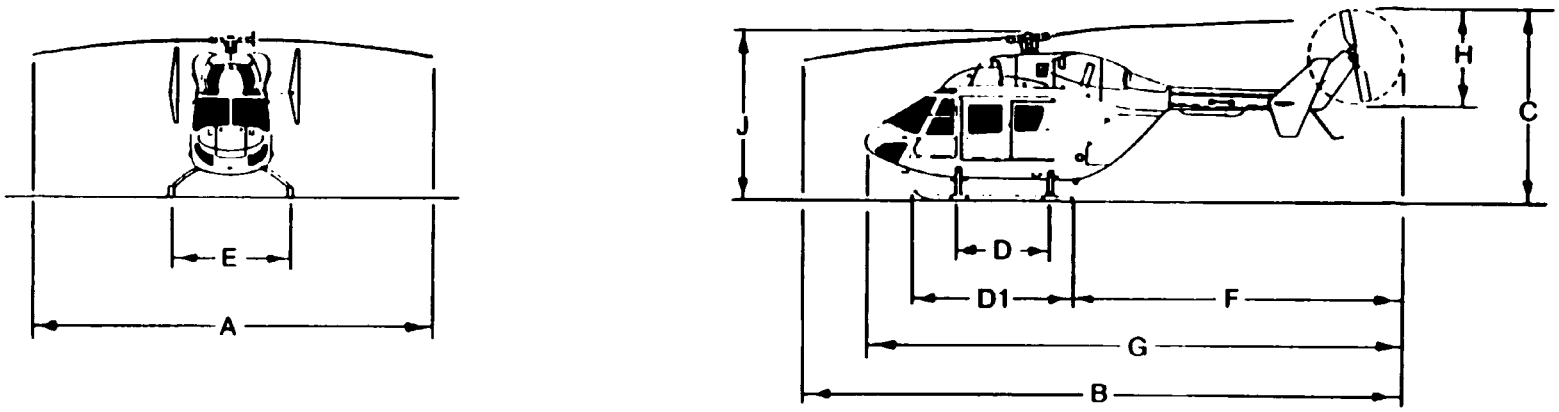

Figure C-150. MBB/Kawasaki BK 117

MAIN ROTOR BLADES, NO.	MAXIMUM TIRE PRESSURE, PSI		A	B	C	D	E	F	G	H	J
	FORWARD GEAR	AFT GEAR									
4	105	105	48.0	58.3	16.8	34.8	6.7	2.8	48.2	9.2	12.6

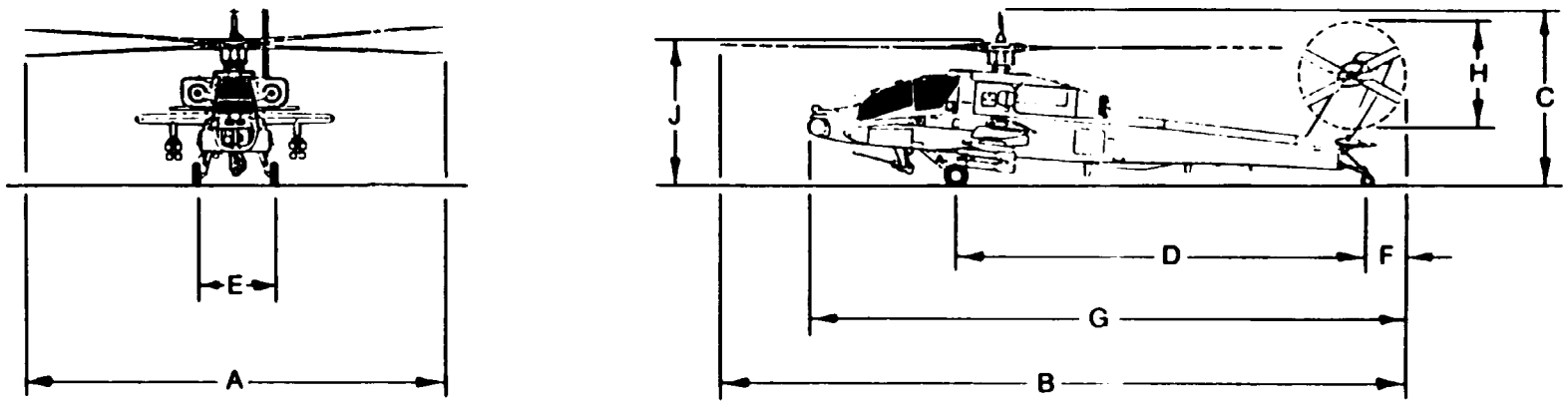

Figure C-151. McDonnell Douglas 77 (AH-64A), Apache

MAIN ROTOR BLADES, NO.	CONTACT AREA, IN^2		A	B	C	D	D1	E	F	G	H	J
	FORWARD	AFT										
4	15.8	15.8	26.3	30.3	8.5	4.5	7.8	6.8	15.7	23.4	4.3	8.3

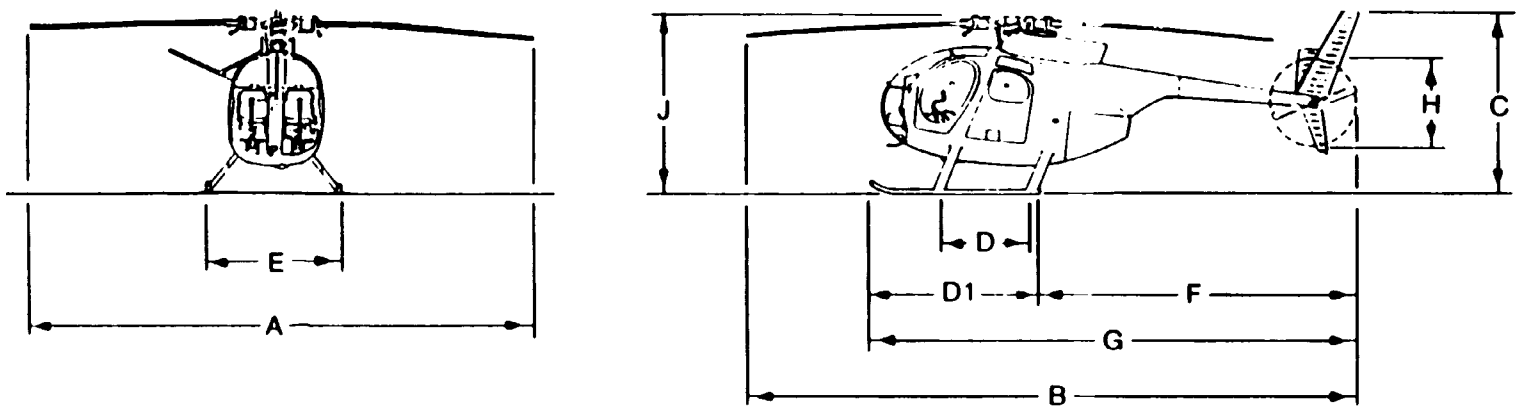

Figure C-152. McDonnell Douglas 500 (OH-6A), Cayuse

MAIN ROTOR BLADES, NO.	CONTACT AREA, IN^2		A	B	C	D	D1	E	F	G	H	J
	FORWARD	AFT										
5	15.8	23.1	26.4	30.8	8.4	4.5	7.8	6.8	15.8	23.6	4.6	8.4

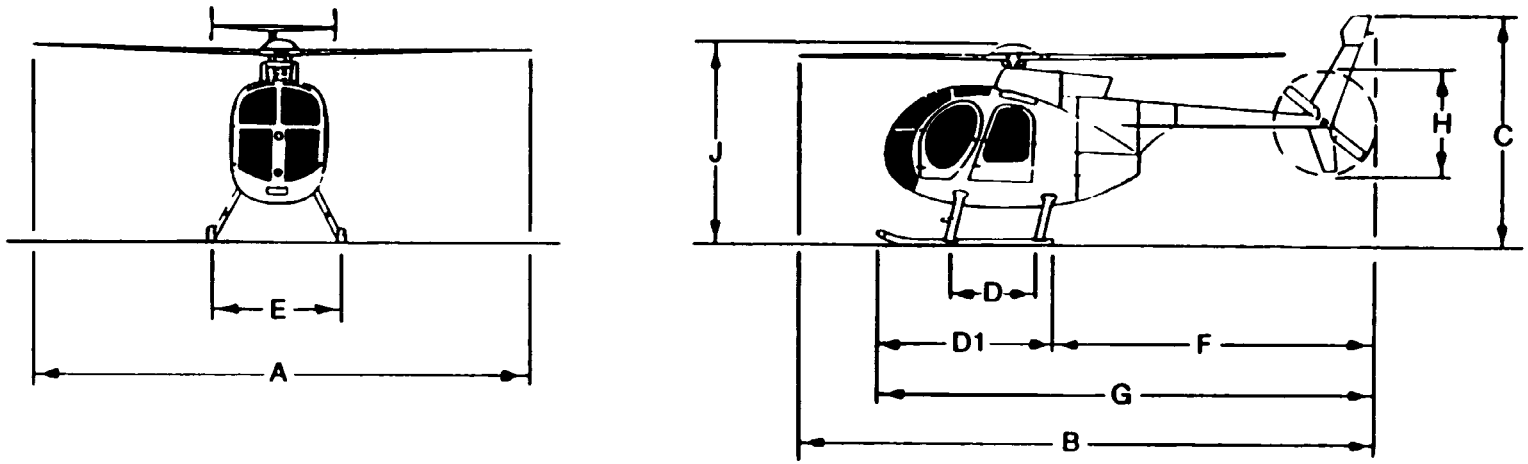

Figure C-153. McDonnell Douglas 500D

MAIN ROTOR BLADES, NO.	CONTACT AREA, IN^2		A	B	C	D	D1	E	F	G	H	J
	FORWARD	AFT										
5	15.8	23.1	27.4	32.1	8.2	4.5	7.8	6.9	16.5	25.6	4.8	8.4

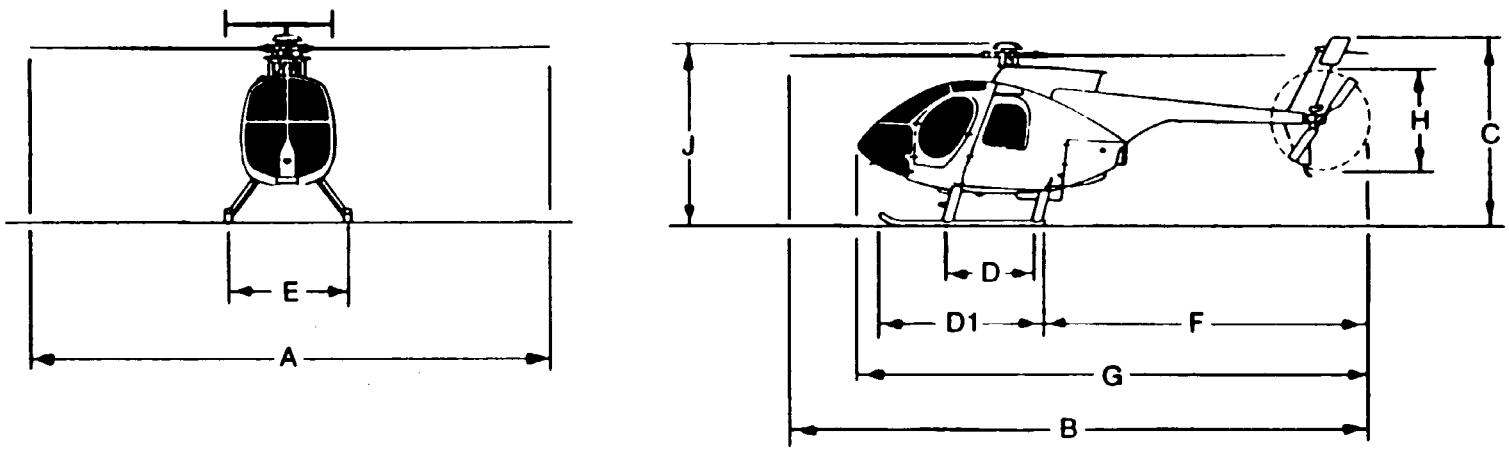

Figure C-154. McDonnell Douglas 530F

MAIN ROTOR BLADES, NO.	CONTACT AREA, IN^2		A	B	C	D	D1	E	F	G	H	J
	FORWARD	AFT										
2	3.8	3.8	25.2	28.8	8.8	4.2	7.8	6.3	14.0	21.8	3.5	8.8

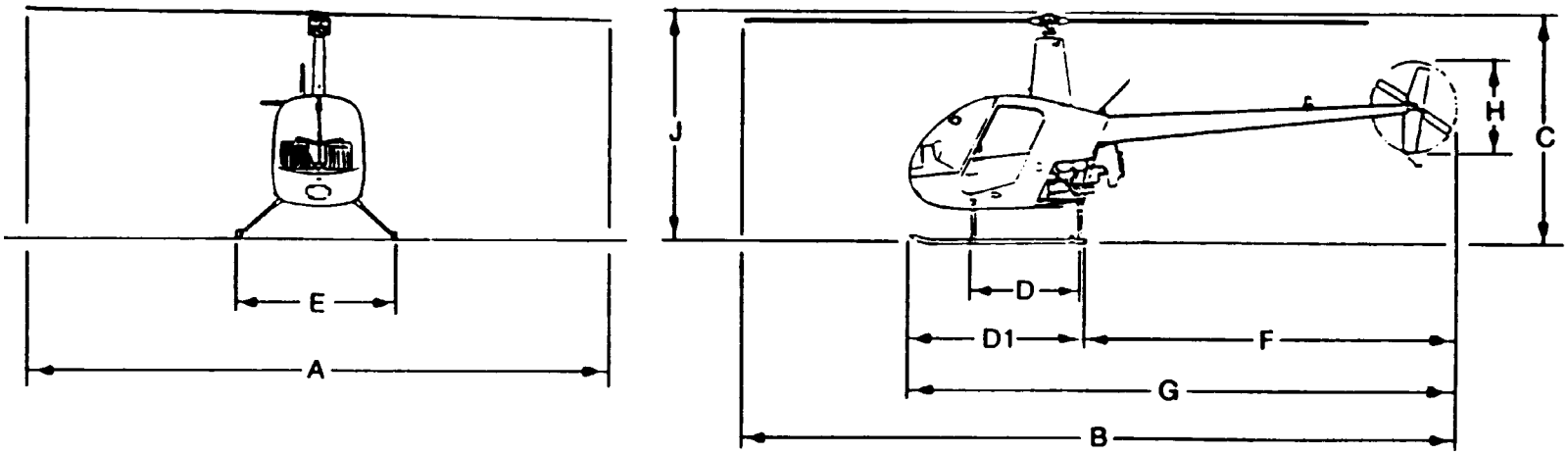

Figure C-155. Robinson R22

MAIN ROTOR BLADES, NO.	CONTACT AREA, IN^2		A	B	C	D	D1	E	F	G	H	J
	FORWARD	AFT										
2	†	†	35.4	39.8	9.3	†	†	7.3	†	†	6.0	9.3

SILHOUETTES NOT AVAILABLE

Figure C-156. Rogerson Hiller RH-1100

MAIN ROTOR BLADES, NO.	CONTACT AREA, IN^2		A	B	C	D	D1	E	F	G	H	J
	FORWARD	AFT										
2	†	†	35.4	40.8	10.1	†	8.3	7.5	†	†	5.5	10.1

SILHOUETTES NOT AVAILABLE

Figure C-157. Rogerson Hiller UH-12E/E4/ET/E4T

MAIN ROTOR BLADES, NO.	CONTACT AREA, IN^2		A	B	C	D	D1	E	F	G	H	J
	FORWARD	AFT										
3	4.2	4.2	27.4	28.3	8.3	3.6	8.0	6.3	14.1	22.3	3.8	8.3

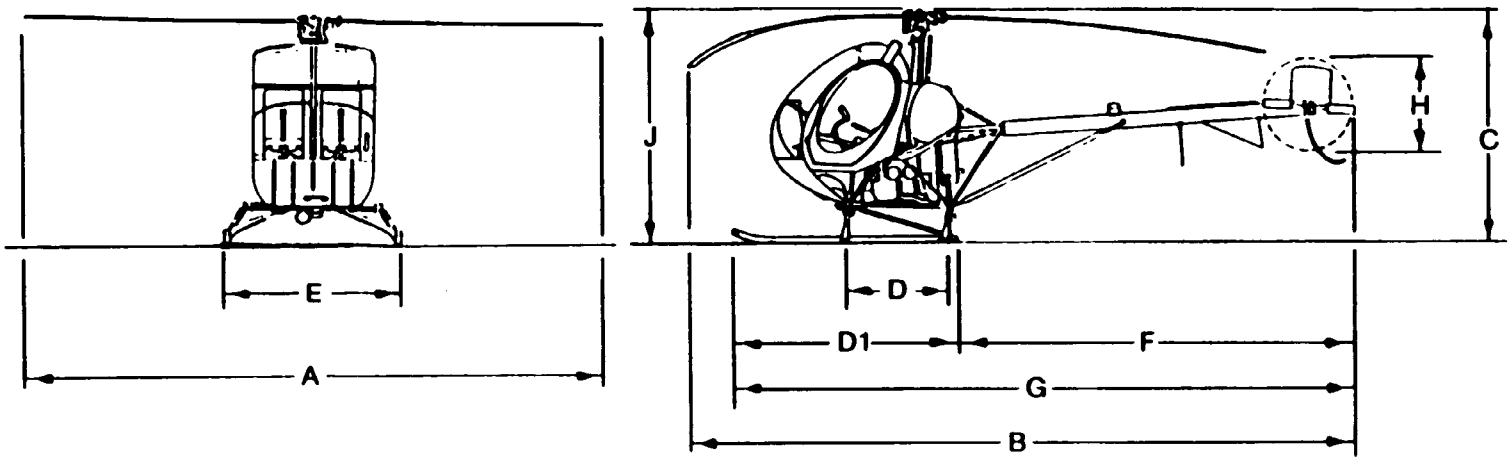

Figure C-158. Schweizer 269A (TH-55A), Osage

MAIN ROTOR BLADES, NO.	CONTACT AREA, IN^2		A	B	C	D	D1	E	F	G	H	J
	FORWARD	AFT										
3	4.2	4.2	26.8	30.8	8.7	3.8	8.2	6.5	13.9	23.0	4.3	8.7

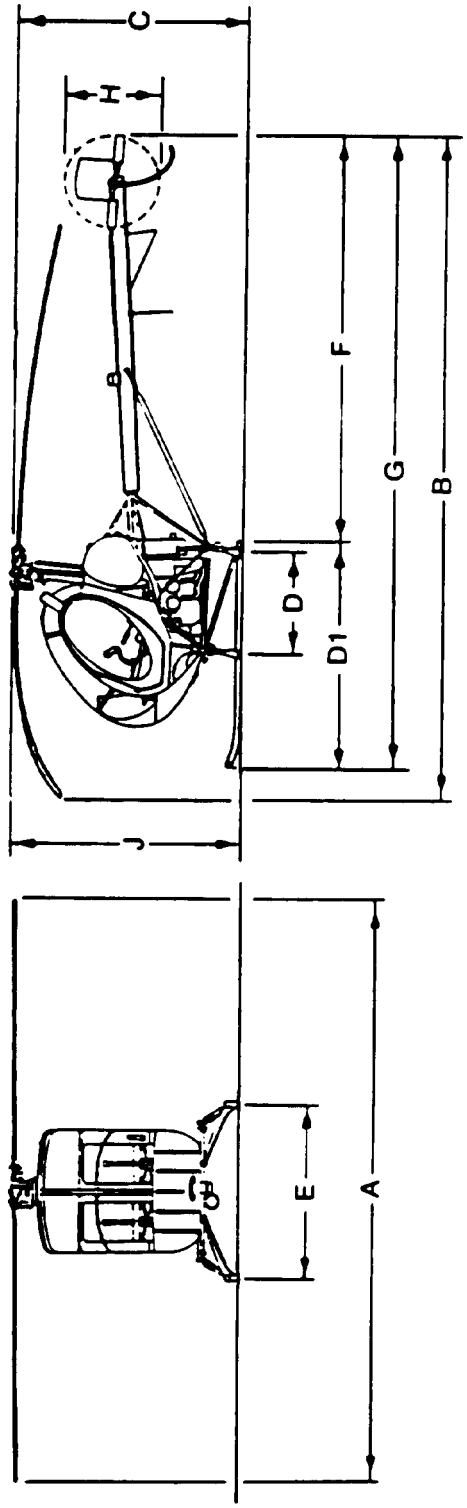

Figure C-159. Schweizer 300C

MAIN ROTOR BLADES, NO.	MAXIMUM TIRE PRESSURE, PSI		A	B	C	D	E	F	G	H	J
	FORWARD GEAR	AFT GEAR									
4	42	†	56.0	65.8	15.9	28.3	12.0	†	51.1	9.5	14.3

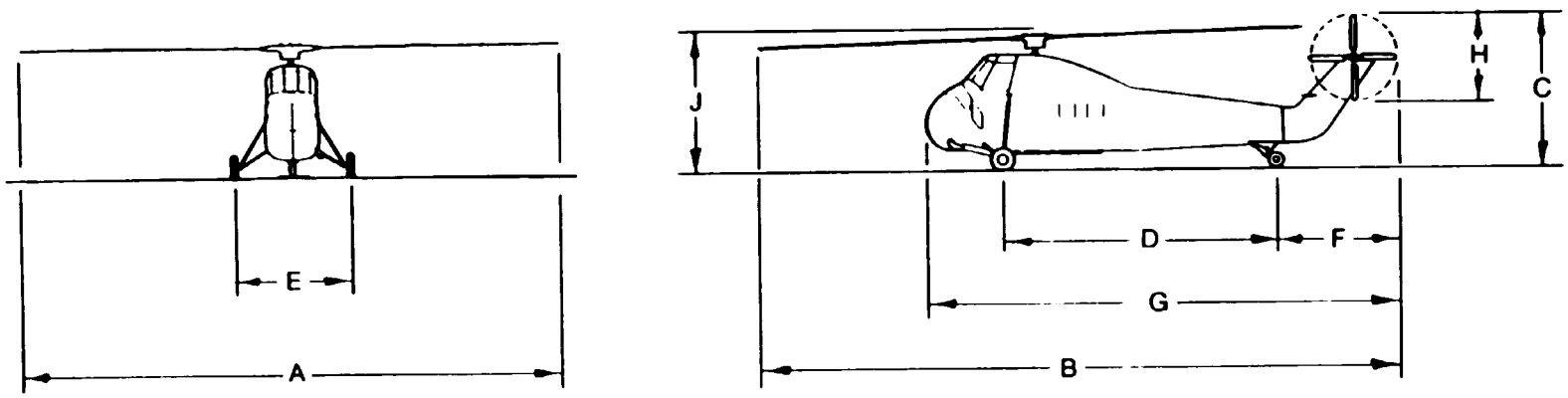

Figure C-160. Sikorsky S-58T

MAIN ROTOR BLADES, NO.	MAXIMUM TIRE PRESSURE, PSI		A	B	C	D	E	F	G	H	J
	FORWARD GEAR	AFT GEAR									
5	70	†	62.0	72.8	18.9	23.5	13.0	17.4	†	10.3	15.5

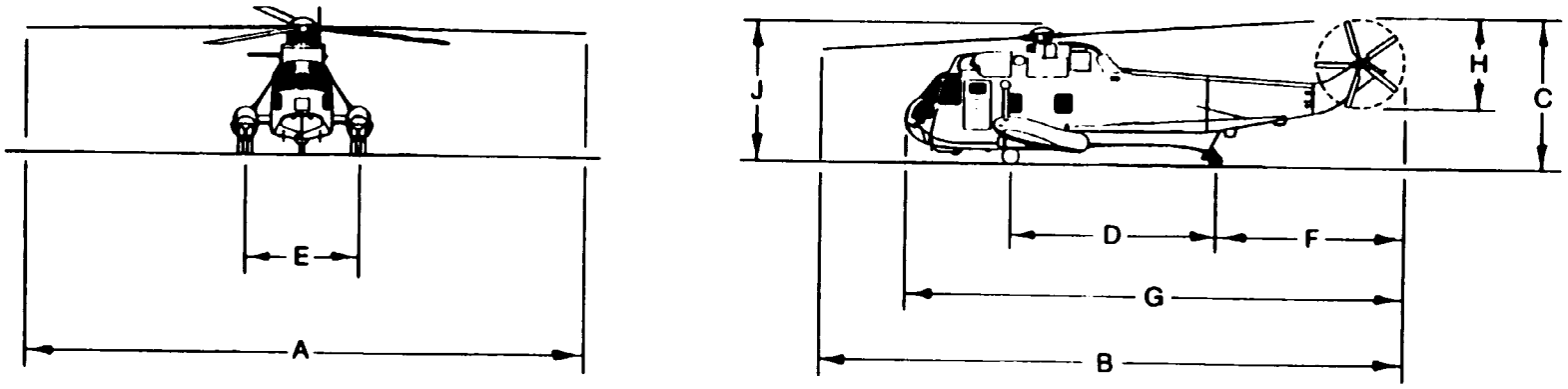

Figure C-161. Sikorsky S-61N

MAIN ROTOR BLADES, NO.	MAXIMUM TIRE PRESSURE, PSI		A	B	C	D	E	F	G	H	J
	FORWARD GEAR	AFT GEAR									
3	70	70	53.0	62.3	16.0	17.8	12.2	†	49.0	8.8	14.2

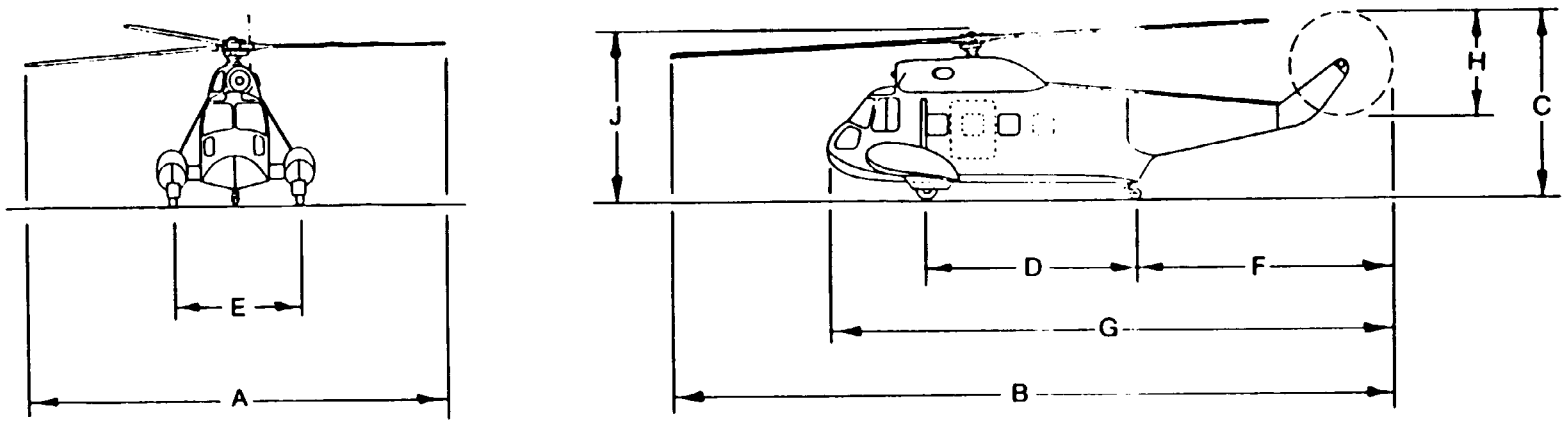

Figure C-162. Sikorsky S-62

MAIN ROTOR BLADES, NO.	MAXIMUM TIRE PRESSURE, PSI		A	B	C	D	E	F	G	H	J
	FORWARD GEAR	AFT GEAR									
6	100	95	72.0	88.5	25.4	24.4	19.8	46.1	76.3	16.0	18.6

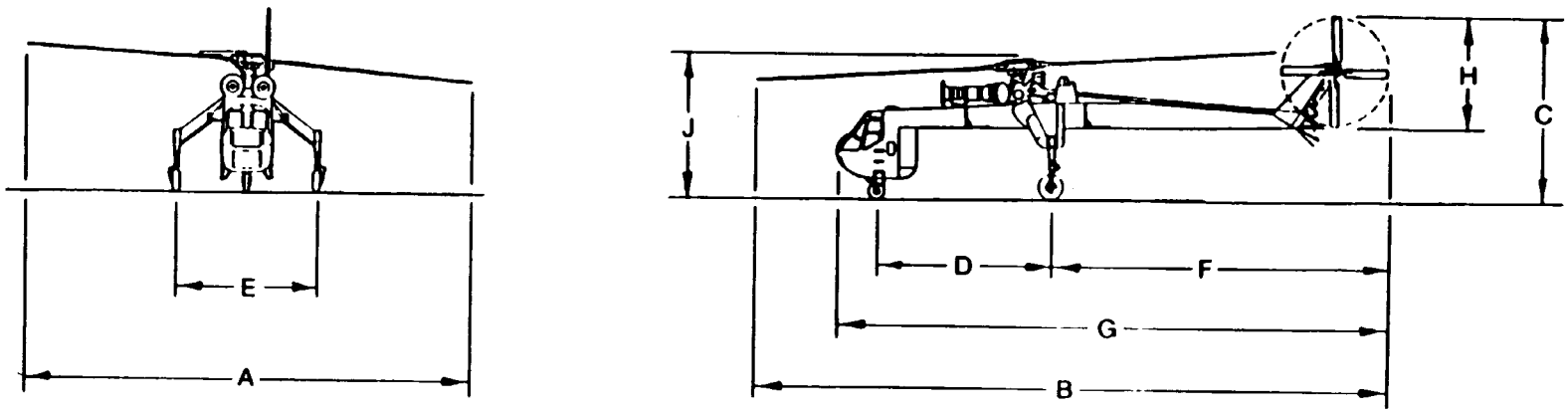

Figure C-163. Sikorsky S-64 (CH-54A), Tarhe

MAIN ROTOR BLADES, NO.	MAXIMUM TIRE PRESSURE, PSI		A	B	C	D	E	F	G	H	J
	FORWARD GEAR	AFT GEAR									
6	95	95	72.3	88.3	24.9	27.3	13.0	43.9	74.2	16.0	17.2

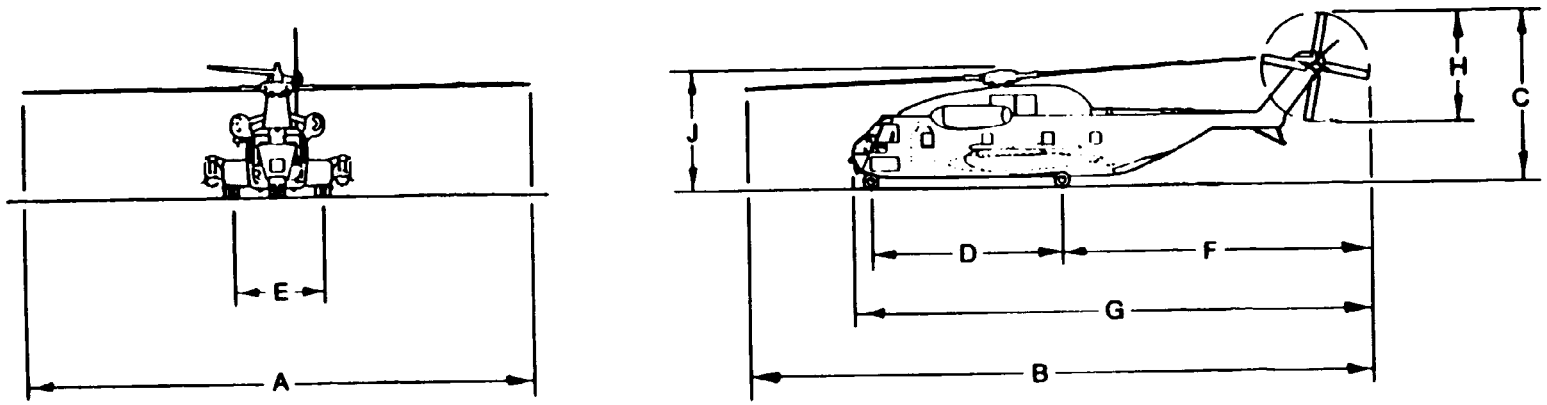

Figure C-164. Sikorsky S-65A (CH-53C and HH-53C), Super Jolly

MAIN ROTOR BLADES, NO.	MAXIMUM TIRE PRESSURE, PSI		A	B	C	D	E	F	G	H	J
	FORWARD GEAR	AFT GEAR									
4	140	95	53.7	64.8	17.5	29.0	8.8	12.7	53.0	11.0	12.4

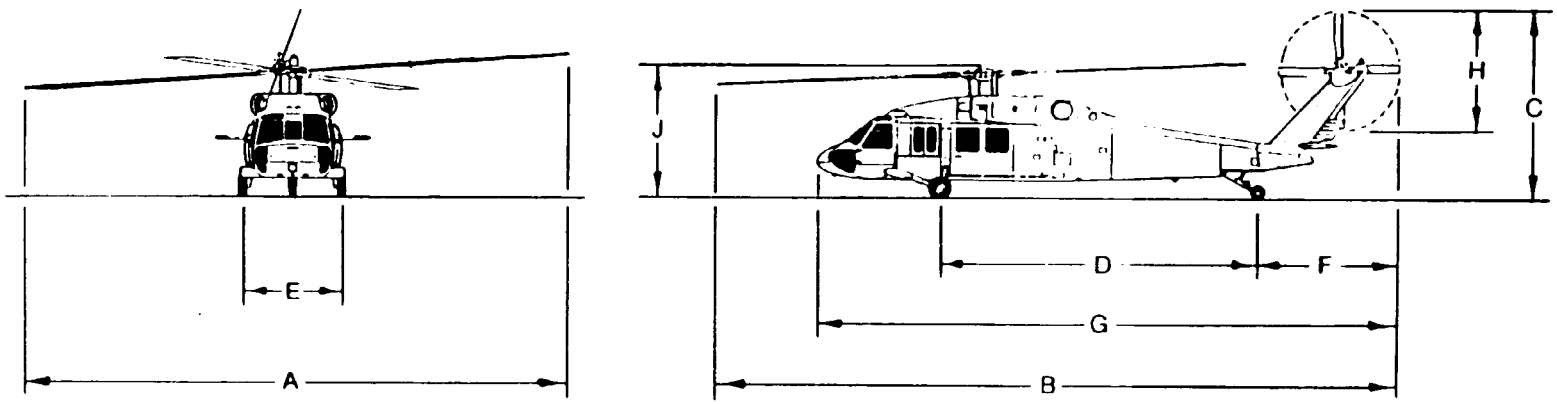

Figure C-165. Sikorsky S-70 (HH-60A, Night Hawk and UH-60A, Black Hawk)

MAIN ROTOR BLADES, NO.	MAXIMUM TIRE PRESSURE, PSI		A	B	C	D	E	F	G	H	J
	FORWARD GEAR	AFT GEAR									
4	140	95	53.7	64.8	16.8	29.0	8.8	12.7	53.0	11.0	12.4

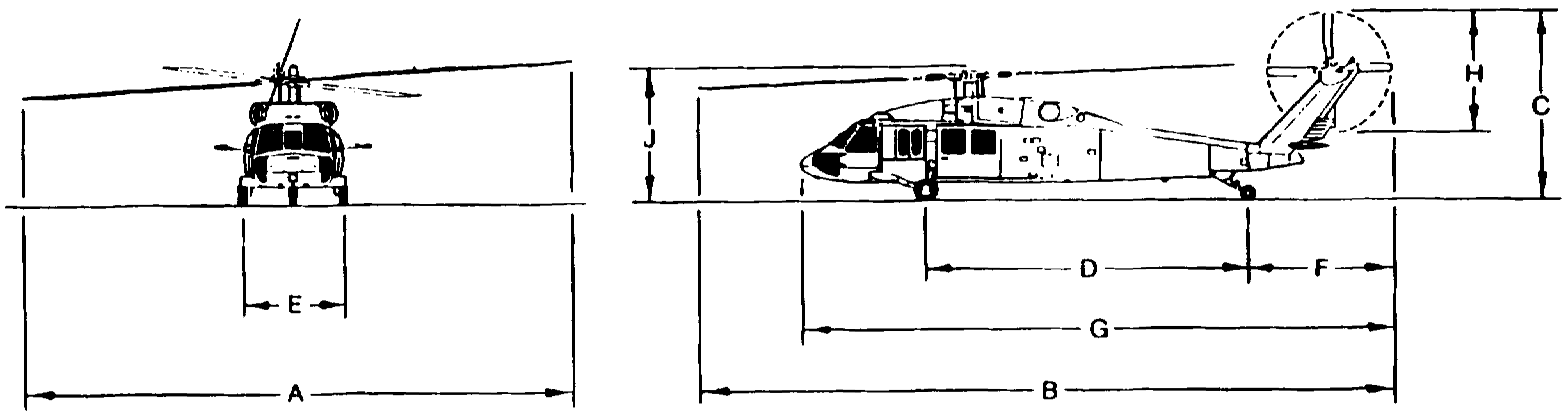

Figure C-166. Sikorsky S-70C

MAIN ROTOR BLADES, NO.	MAXIMUM TIRE PRESSURE, PSI		A	B	C	D	E	F	G	H	J
	FORWARD GEAR	AFT GEAR									
4	135	165	44.0	52.5	14.5	16.4	8.0	22.1	46.1	8.0	11.8

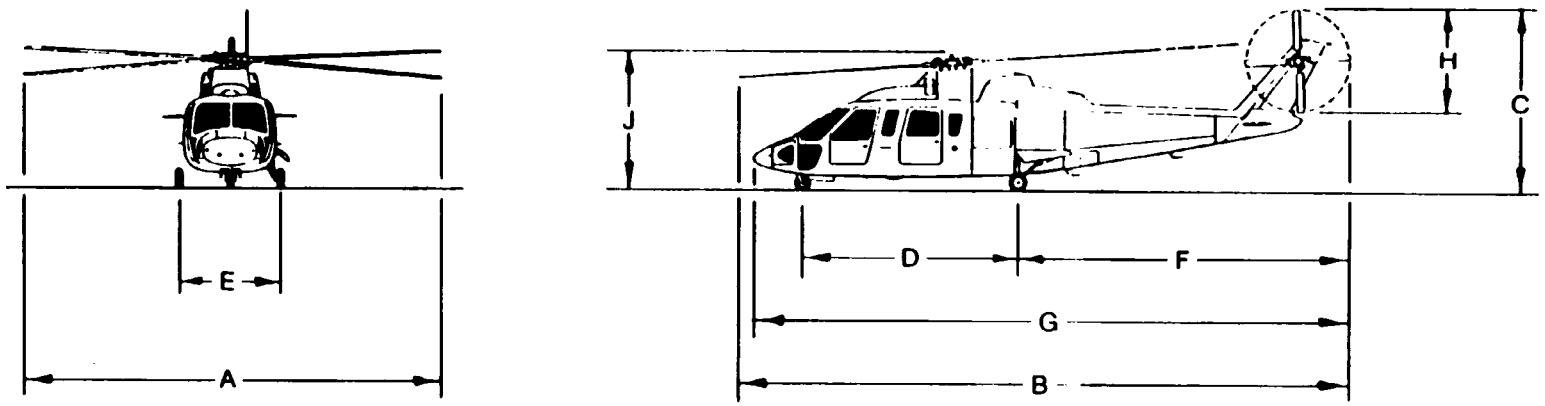

Figure C-167. Sikorsky S-76A/B

MODEL	MAIN ROTOR BLADES, NO.	MAXIMUM TIRE PRESSURE, PSI		A	B	C	D	E	F	G	H	J
		FORWARD GEAR	AFT GEAR									
30-100-60	4	55	68	43.7	52.1	15.5	17.9	10.1	†	52.1	8.0	†
30-200	4	55	68	43.7	52.1	15.4	17.9	10.1	†	52.1	8.0	†
30-300	5	†	†	42.5	52.1	16.3	17.8	9.3	†	52.1	9.0	†

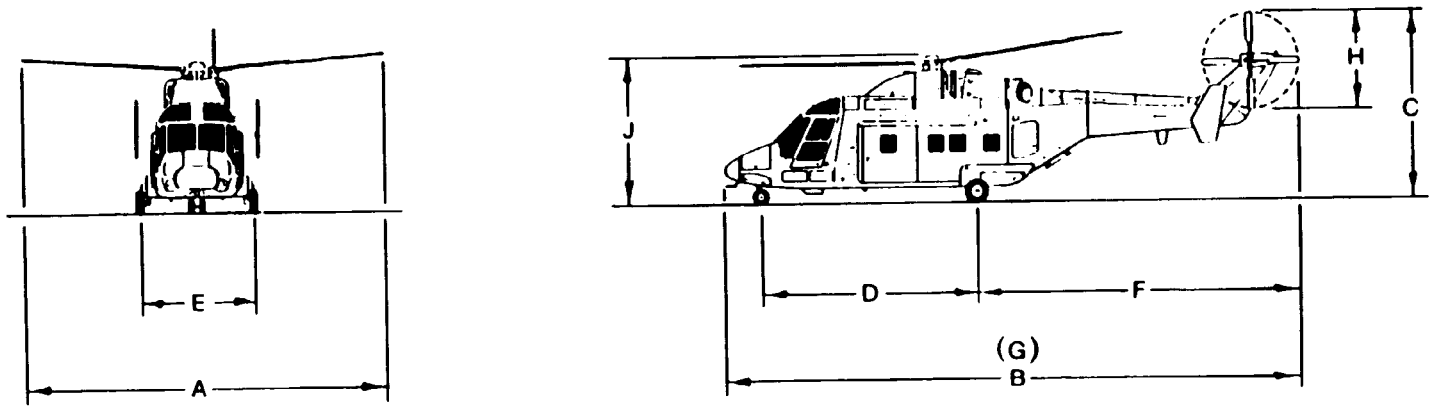

Figure C-168. Westland 30-100-60, 30-200 and 30-300