MAIN ROTOR BLADES, NO.	CONTACT AREA, IN^2		A	B	C	D	D1	E	F	G	H	J
	FORWARD	AFT										
3	45.0	45.0	34.5	39.3	10.4	6.4	†	6.7	†	31.3	2.3*	8.9

* ENCLOSED TAIL ROTOR

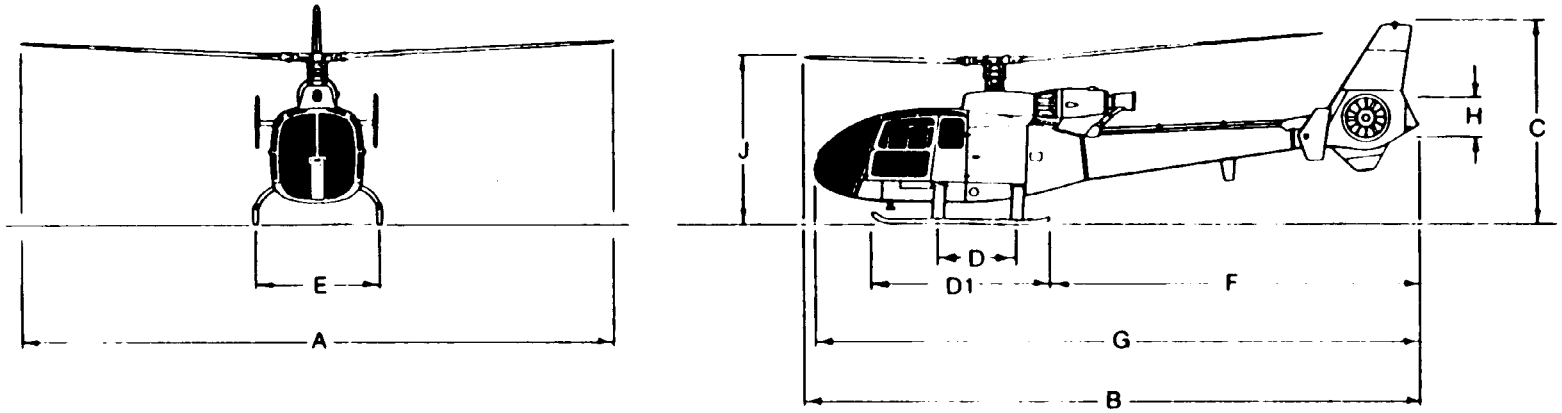

Figure C-114. Aerospatiale 341, Gazelle

MAIN ROTOR BLADES, NO.	CONTACT AREA, IN^2		A	B	C	D	D1	E	F	G	H	J
	FORWARD	AFT										
3	43.0	43.0	35.1	42.6	10.3	4.7	†	7.2	†	35.8	6.1	†

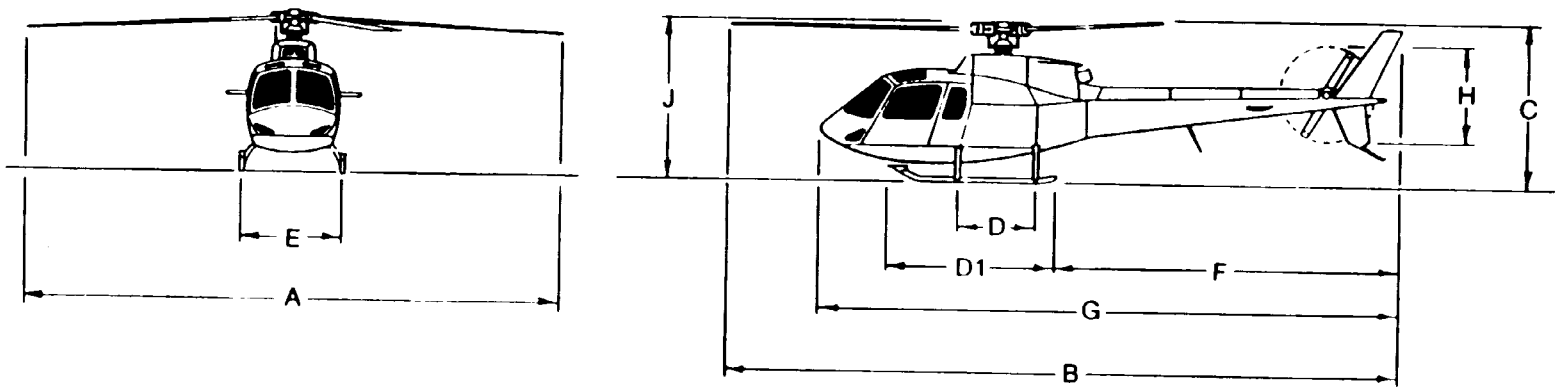

Figure C-115. Aerospatiale 350B/D, Astar

MODEL	MAIN ROTOR BLADES, NO.	CONTACT AREA, IN^2		A	B	C	D	D1	E	F	G	H	J
		FORWARD	AFT										
355E/F	3	43.0	43.0	35.1	42.6	10.6	4.5	†	6.6	†	35.8	6.1	†
355F1	3	43.0	43.0	35.1	42.6	10.6	4.5	†	7.1	†	35.8	6.1	†

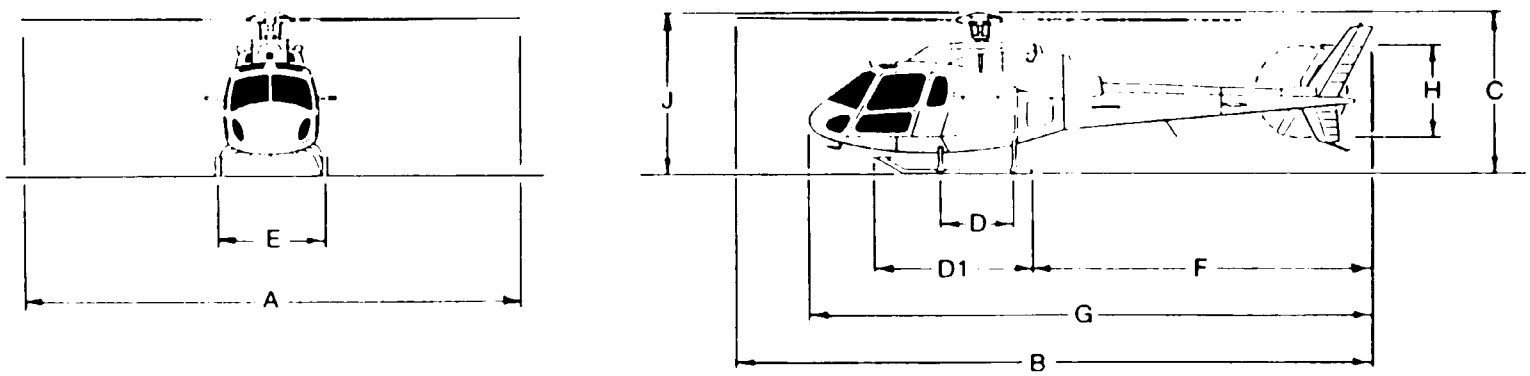

Figure C-116. Aerospatiale 355E/F/F1, Twinstar

MAIN ROTOR BLADES, NO.	MAXIMUM TIRE PRESSURE, PSI		A	B	C	D	E	F	G	H	J
	FORWARD GEAR	AFT GEAR									
4	73	73	37.7	43.3	11.5	23.7	6.4	†	36.0	3.0*	†

* ENCLOSED TAIL ROTOR

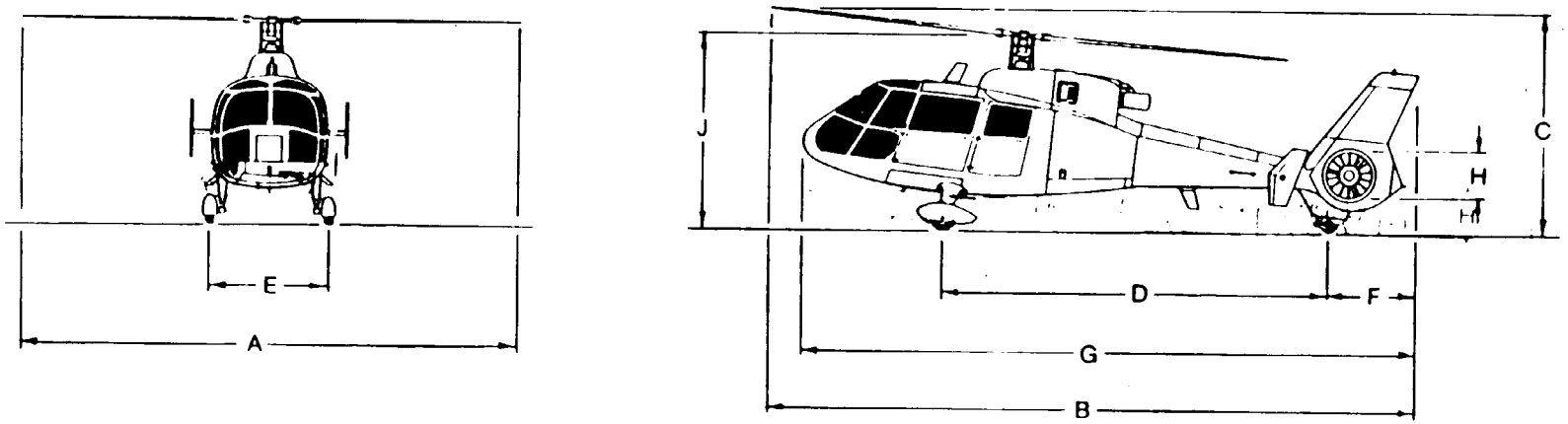

Figure C-117. Aerospatiale 360C, Dauphin

MAIN ROTOR BLADES, NO.	MAXIMUM TIRE PRESSURE, PSI		A	B	C	D	E	F	G	H	J
	FORWARD GEAR	AFT GEAR									
4	73	73	38.3	43.7	11.4	23.7	6.4	†	36.0	3.0*	†

* ENCLOSED TAIL ROTOR

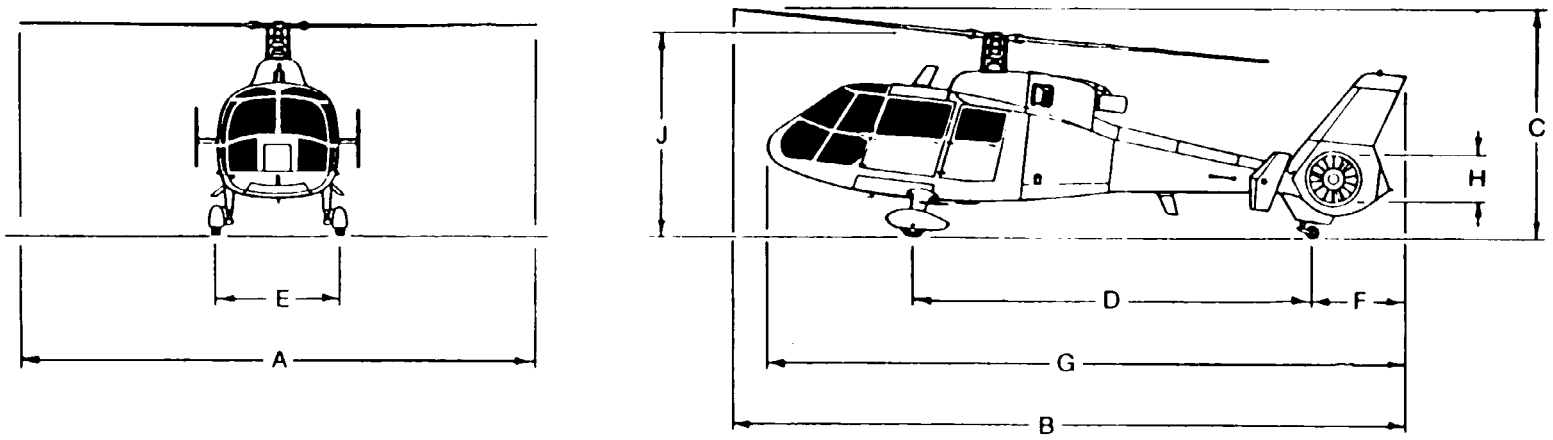

Figure C-118. Aerospatiale 365C, Dauphin 2

MAIN ROTOR BLADES, NO.	MAXIMUM TIRE PRESSURE, PSI		A	B	C	D	E	F	G	H	J
	FORWARD GEAR	AFT GEAR									
4	58	101	39.1	44.2	13.1	11.8	6.6	†	37.6	3.0*	11.5

* ENCLOSED TAIL ROTOR

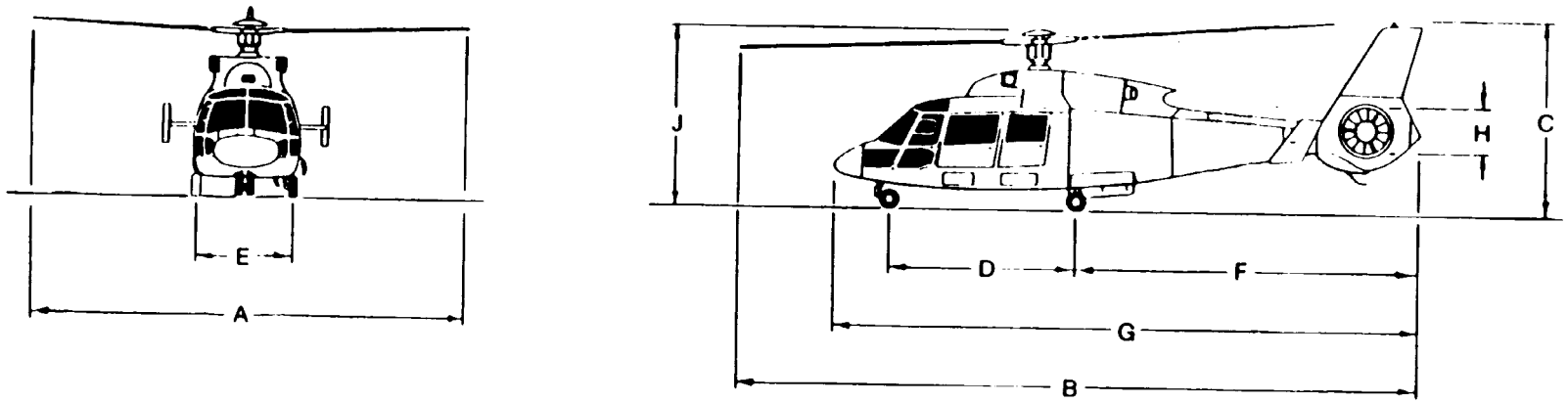

Figure C-119. Aerospatiale 365N, Dauphin 2

MAIN ROTOR BLADES, NO.	MAXIMUM TIRE PRESSURE, PSI		A	B	C	D	E	F	G	H	J
	FORWARD GEAR	AFT GEAR									
4	85	85	25.6	42.8	10.8	11.6	7.5	23.7	37.6	6.7	9.5

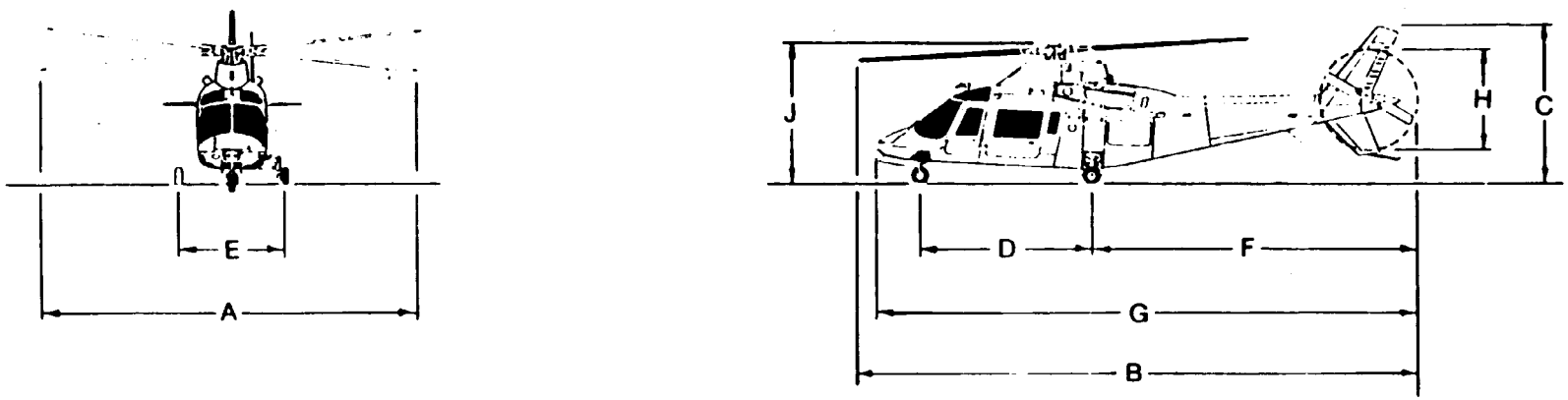

Figure C-120. Agusta 109A and 109A MkII

MAIN ROTOR BLADES, NO.	CONTACT AREA, IN^2		A	B	C	D	D1	E	F	G	H	J
	FORWARD	AFT										
2	16.1	16.1	37.1	43.3	9.3	5.1	9.4	7.5	22.8	32.3	5.8	9.4

SILHOUETTES NOT AVAILABLE

Figure C-121. Bell 47G-3B (OH-13 and TH-13T), Sioux

MAIN ROTOR BLADES, NO.	CONTACT AREA, IN^2		A	B	C	D	D1	E	F	G	H	J
	FORWARD	AFT										
2	†	†	37.1	43.6	9.3	†	9.9	7.5	†	†	5.8	†

SILHOUETTES NOT AVAILABLE

Figure C-122. Bell 47G-5A

MAIN ROTOR BLADES, NO.	CONTACT AREA, IN^2		A	B	C	D	D1	E	F	G	H	J
	FORWARD	AFT										
2	24.3	25.0	44.0	53.0	14.8	7.6	12.1	8.4	29.8	42.7	8.5	12.7

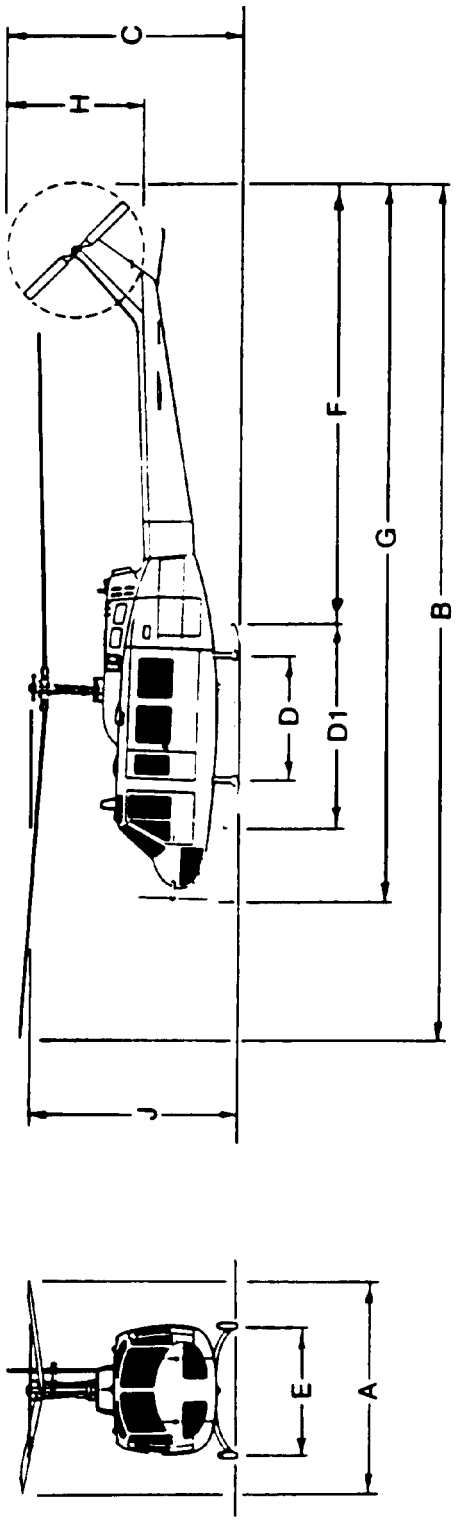

Figure C-123. Bell 204 (UH-1B/C/M), Iroquois

MAIN ROTOR BLADES, NO.	CONTACT AREA, IN^2		A	B	C	D	D1	E	F	G	H	J
	FORWARD	AFT										
2	24.3	25.0	48.0	57.1	14.5	7.6	12.1	8.6	29.8	44.9	8.5	13.1

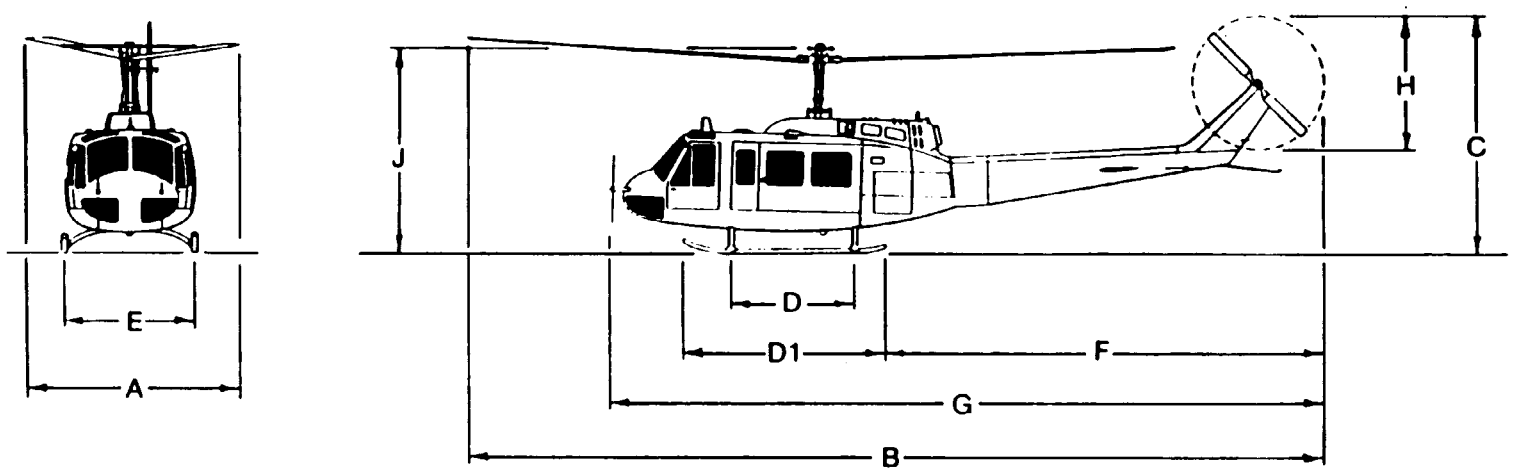

Figure C-124. Bell 205 (UH-1D/H), Iroquois

MAIN ROTOR BLADES, NO.	CONTACT AREA, IN²		A	B	C	D	D1	E	F	G	H	J
	FORWARD	AFT										
2	†	†	48.0	57.1	14.4	†	12.1	9.0	†	44.9	8.5	13.1

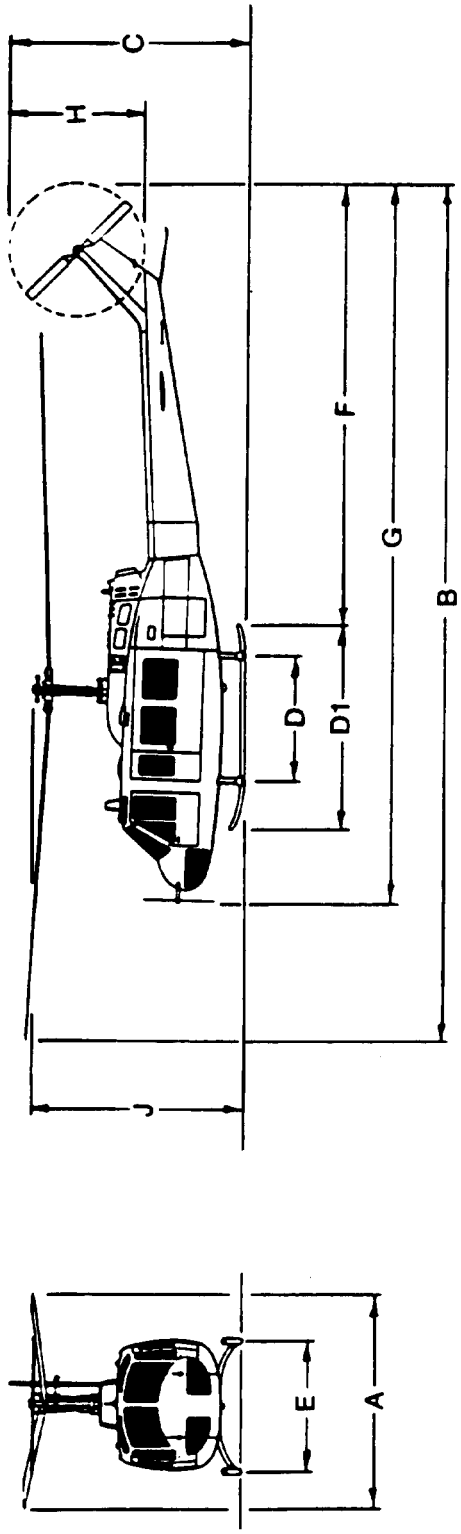

Figure C-125. Bell 205A-1

MAIN ROTOR BLADES, NO.	CONTACT AREA, IN^2		A	B	C	D	D1	E	F	G	H	J
	FORWARD	AFT										
2	18.3	18.3	35.4	41.0	12.0	4.8	8.1	6.4	21.0	32.2	5.2	9.6

* HEIGHT OVER TAIL FIN, 8.2 FT.

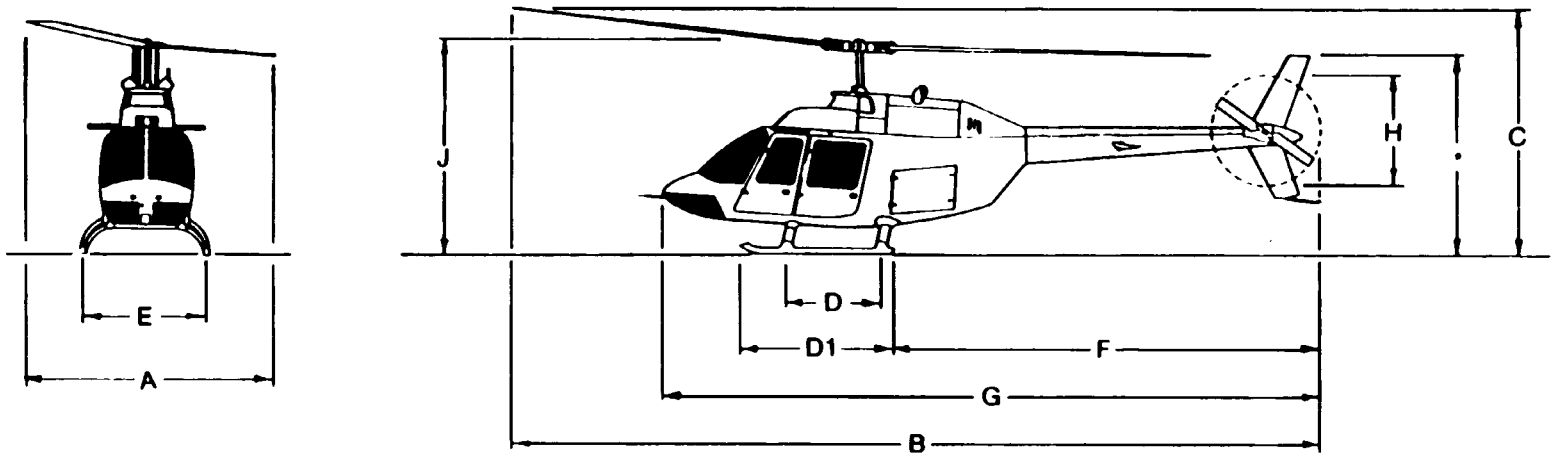

Figure C-126. Bell 206A (OH-58A/C), Kiowa

MAIN ROTOR BLADES, NO.	CONTACT AREA, IN^2		A	B	C	D	D1	E	F	G	H	J
	FORWARD	AFT										
2	13.5	13.5	33.3	39.2	11.6	4.5	7.8	6.0	†	31.2	5.4	9.6

† HEIGHT OVER TAIL FIN, 8.3 FT.

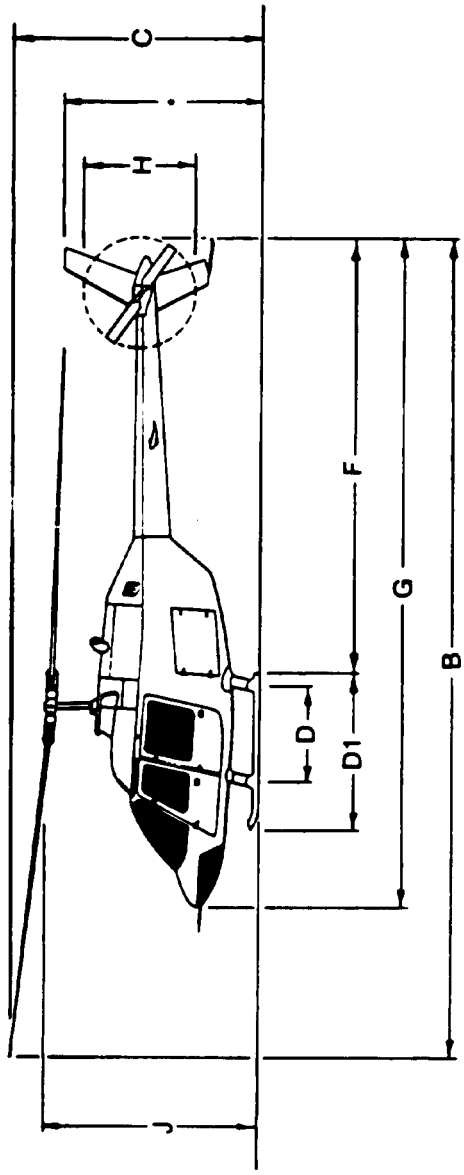

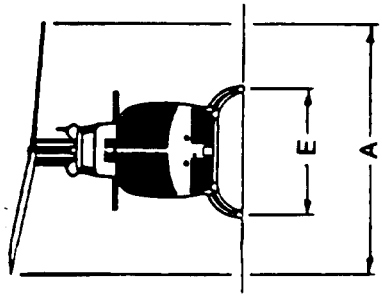

Figure C-127. Bell 206B, Jet Ranger 3

MAIN ROTOR BLADES, NO.	CONTACT AREA, IN^2		A	B	C	D	D1	E	F	G	H	J
	FORWARD	AFT										
2	13.5	13.5	37.0	42.5	11.7	6.8	9.9	7.2	†	†	5.4	10.3

* HEIGHT OVER TAIL FIN, 9.5 FT.

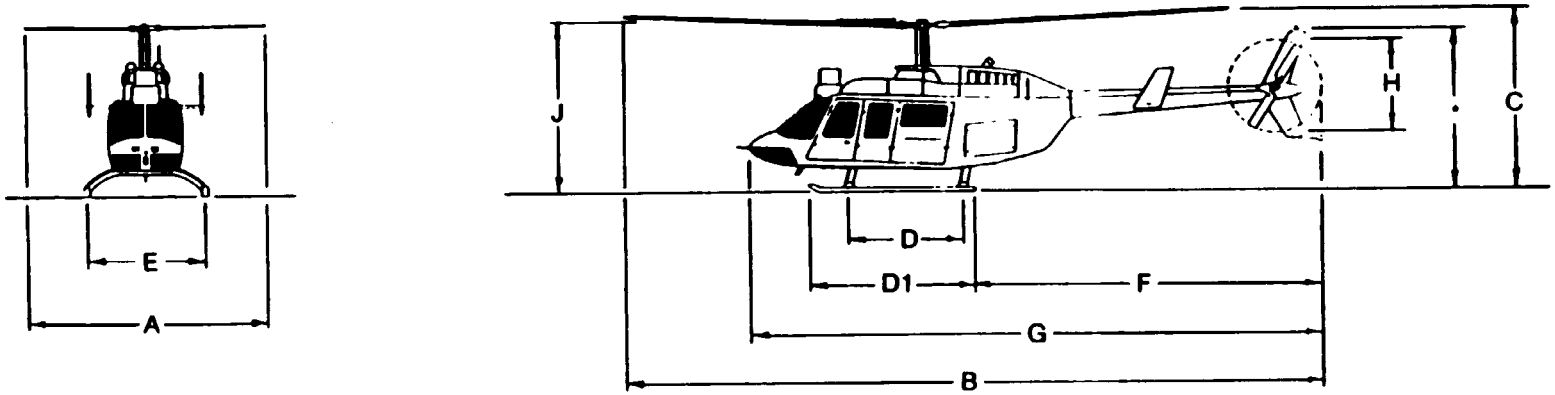

Figure C-128. Bell 206L-3, Long Ranger 3

MODEL	MAIN ROTOR BLADES, NO.	CONTACT AREA, IN^2		A	B	C	D	D1	E	F	G	H	J
		FORWARD	AFT										
AH-1G	2	26.4	26.4	44.0	52.9	13.5	5.9	11.0	7.3	28.5	46.0	8.5	13.4
AH-1S (PROD.)	2	26.4	26.4	44.0	53.0	13.5	5.9	11.0	7.3	28.5	46.0	8.5	13.4
AH-1S (ECAS)	2	26.4	26.4	44.0	53.1	13.5	5.9	11.0	7.0	28.5	46.0	8.5	13.4
AH-1S (MOD.)	2	26.4	26.4	44.0	53.1	13.5	5.9	11.0	7.0	28.5	46.0	8.5	13.4

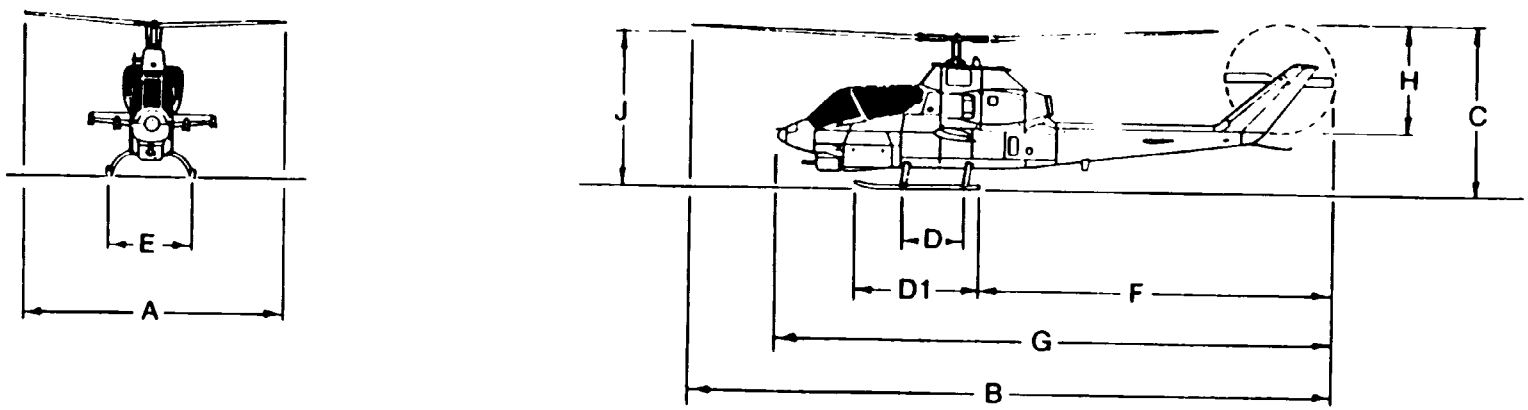

Figure C-129. Bell 209 (AH-1G), Cobra; [AH-1S (Production)], Cobra; [AH-1S (ECAS)], Upgun Cobra; [AH-1S (Modernized)], Mod. Cobra

MAIN ROTOR BLADES, NO.	CONTACT AREA, IN^2		A	B	C	D	D1	E	F	G	H	J
	FORWARD	AFT										
2	24.0	24.0	48.0	57.3	14.4	7.6	12.1	8.7	29.8	45.9	8.6	12.8

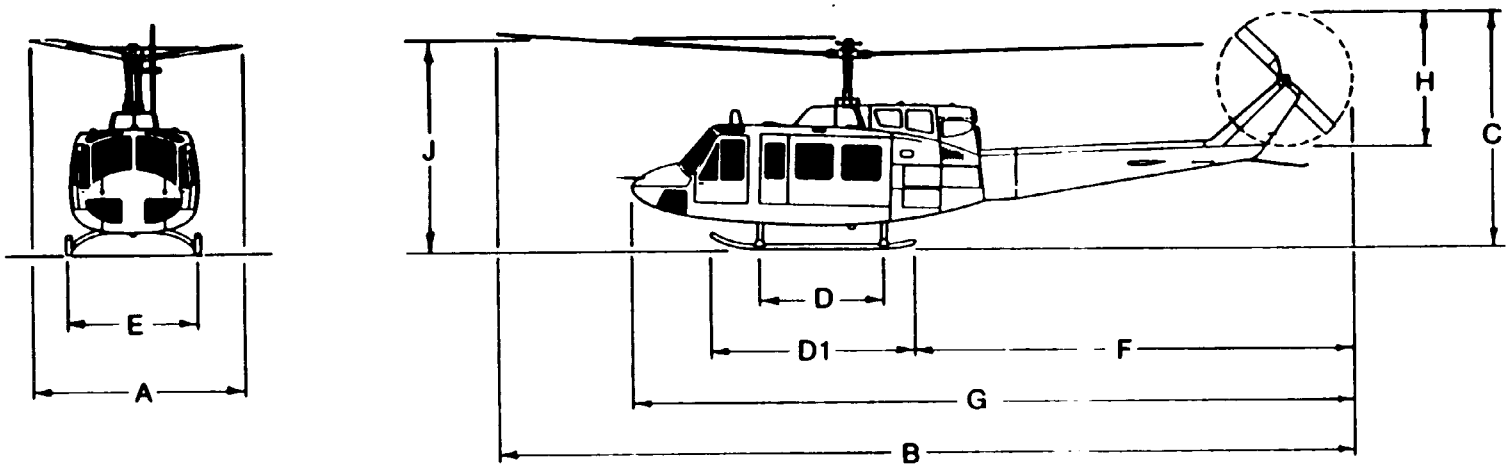

Figure C-130. Bell 212 (UH-1N), Twin Huey

MAIN ROTOR BLADES, NO.	CONTACT AREA, IN^2		A	B	C	D	D1	E	F	G	H	J
	FORWARD	AFT										
2	24.0	24.0	48.0	57.3	13.0	7.6	12.1	8.3	†	†	8.6	†

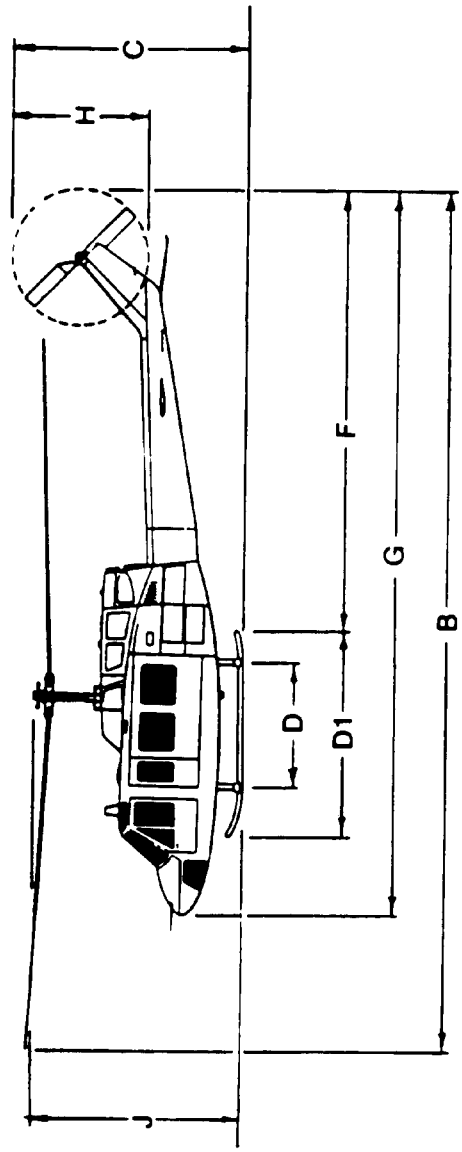

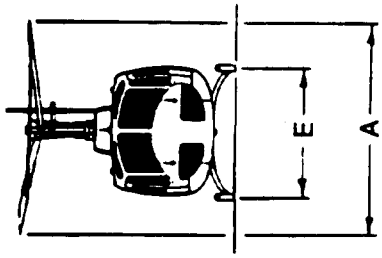

Figure C-131. Bell 212

MAIN ROTOR BLADES, NO.	CONTACT AREA, IN^2		A	B	C	D	D1	E	F	G	H	J
	FORWARD	AFT										
2	†	†	50.0	60.4	13.4	†	12.1	8.6	†	†	9.6	†

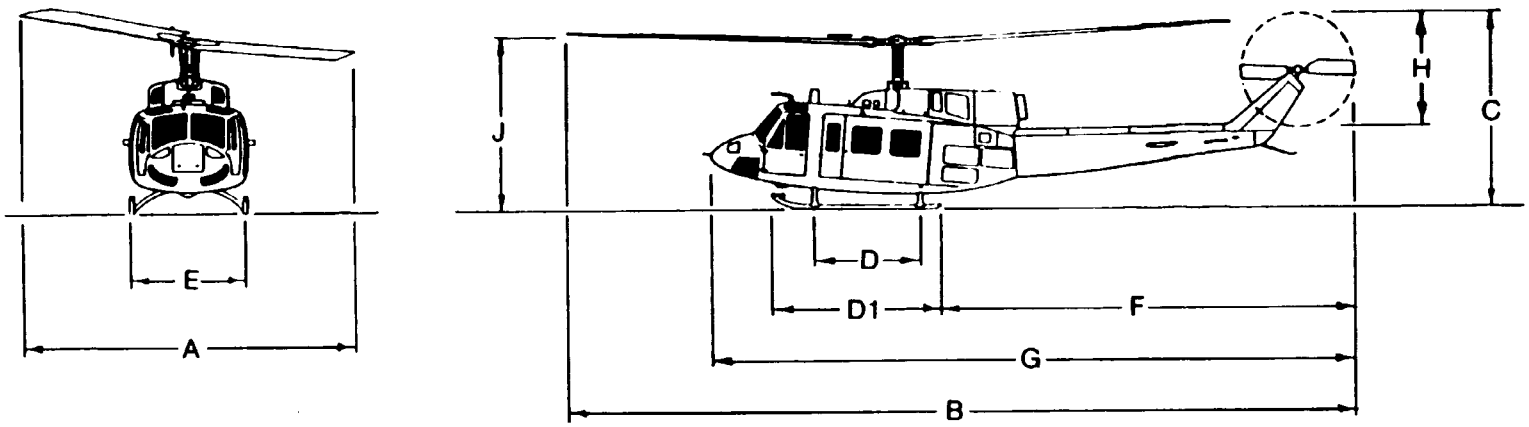

Figure C-132. Bell 214B, Big Lifter

MAIN ROTOR BLADES, NO.	CONTACT AREA, IN^2		A	B	C	D	D1	E	F	G	H	J
	FORWARD	AFT										
2	†	†	52.0	62.2	13.2	8.1	†	8.3	†	†	9.7	†

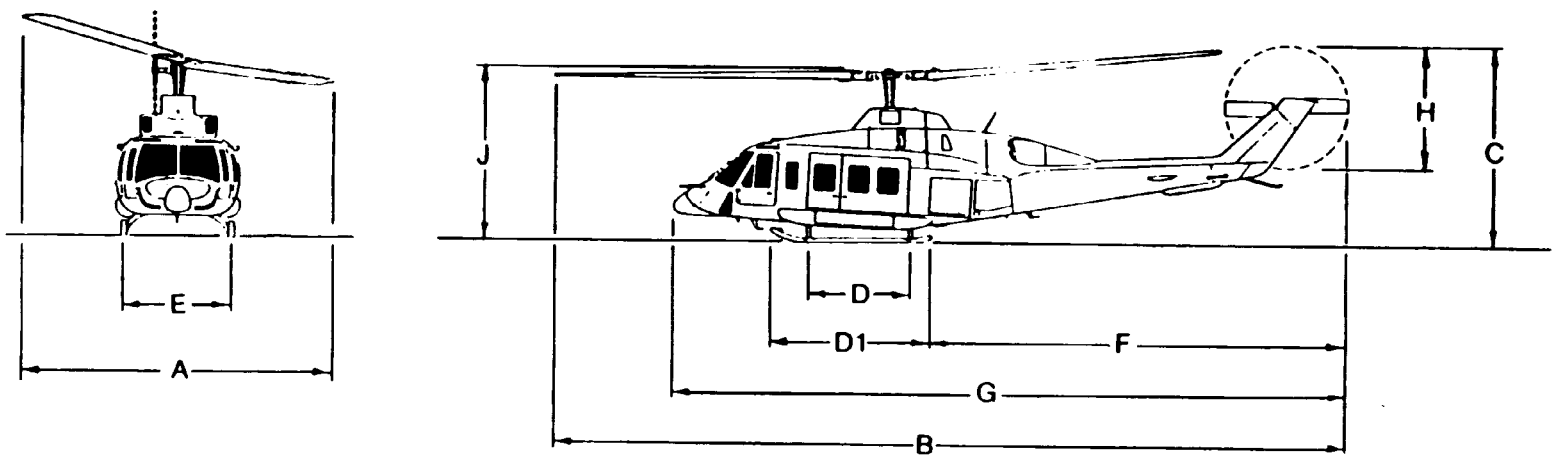

Figure C-133. Bell 214ST, Super Transport

MODEL	MAIN ROTOR BLADES, NO.	MAXIMUM TIRE PRESSURE, PSI		A	B	C	D	E	F	G	H	J
		FORWARD GEAR	AFT GEAR									
222	2	60	75	39.8	47.5	11.0	12.2	9.1	†	36.0	6.5	†
222B	2	60	75	42.0	50.3	11.3	12.2	9.1	†	42.2	6.9	†

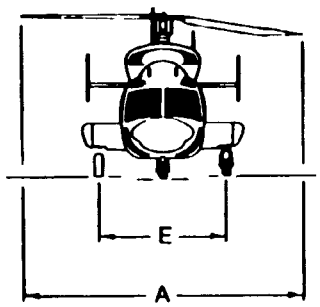

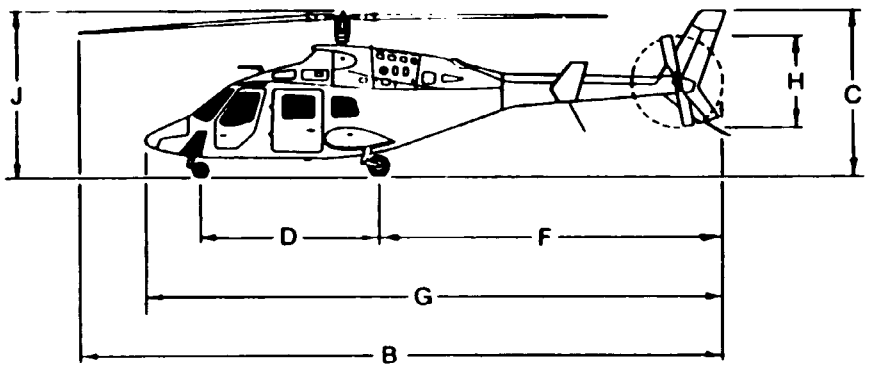

Figure C-134. Bell 222 and 222B

MAIN ROTOR BLADES, NO.	CONTACT AREA, IN^2		A	B	C	D	D1	E	F	G	H	J
	FORWARD	AFT										
2	24.0	24.0	42.0	50.3	10.5	7.9	†	7.8	†	42.2	6.9	†

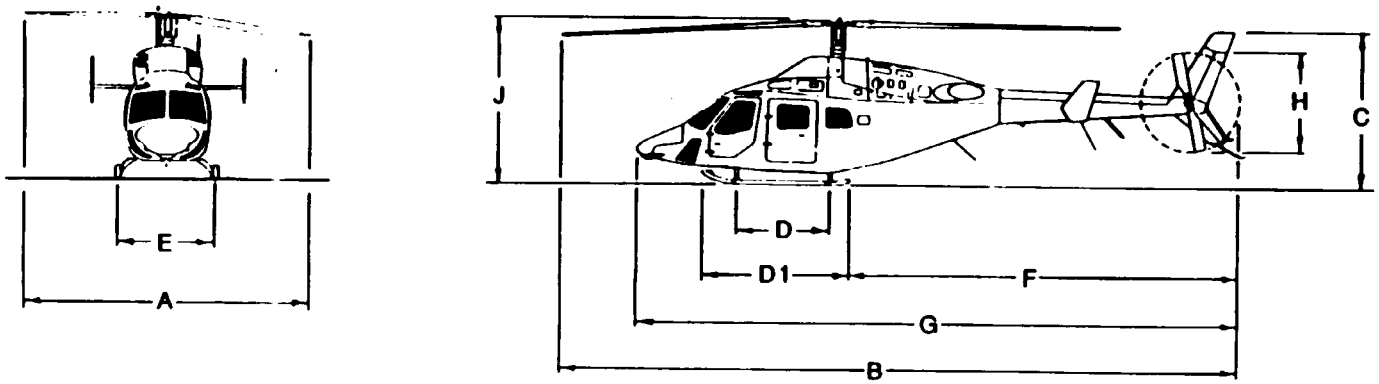

Figure C-135. Bell 222UT, Utility Twin

MAIN ROTOR BLADES, NO.	CONTACT AREA, IN^2		A	B	C	D	D1	E	F	G	H	J
	FORWARD	AFT										
4	16.3	16.3	35.0	42.2	12.8	4.8	8.1	6.4	21.1	33.0	5.4	8.5

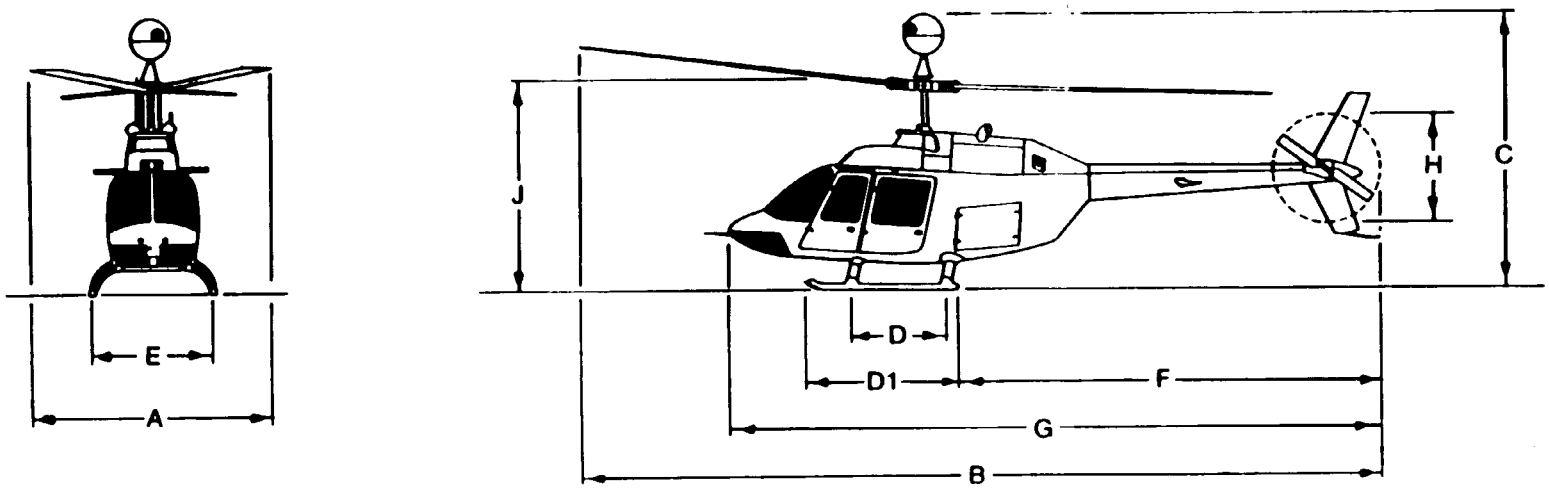

Figure C-136. Bell 406 AHIP (OH-58D), Kiowa

MAIN ROTOR BLADES, NO.	CONTACT AREA, IN^2		A	B	C	D	D1	E	F	G	H	J
	FORWARD	AFT										
4	24.0	24.0	46.0	56.2	10.9	7.9	12.1	8.3	†	†	8.6	10.8

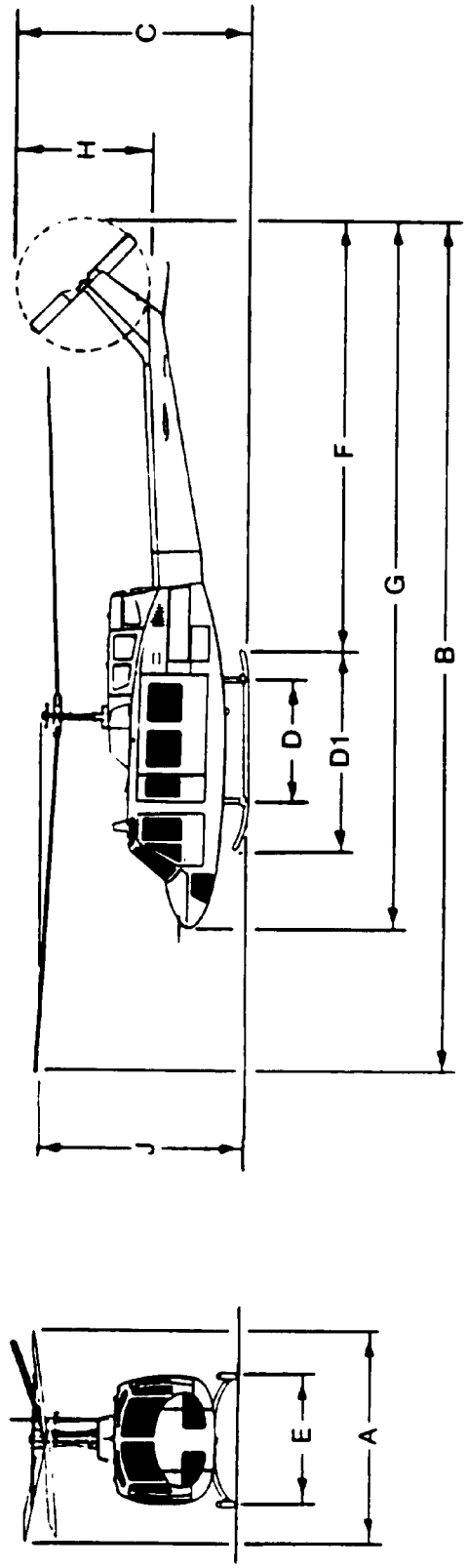

Figure C-137. Bell 412

MAIN ROTOR BLADES, NO.	MAXIMUM TIRE PRESSURE, PSI		A	B	C	D	E	F	G	H	J
	FORWARD GEAR	AFT GEAR									
3*	†	†	84.6**	62.6	21.8	21.8	15.2	32.1	57.3	††	21.8

* THREE BLADES ON 2 ROTORS.
** EACH ROTOR DIAMETER IS 38.0 FT.
†† AIRCRAFT IS NOT EQUIPPED WITH VERTICAL TAIL ROTOR.

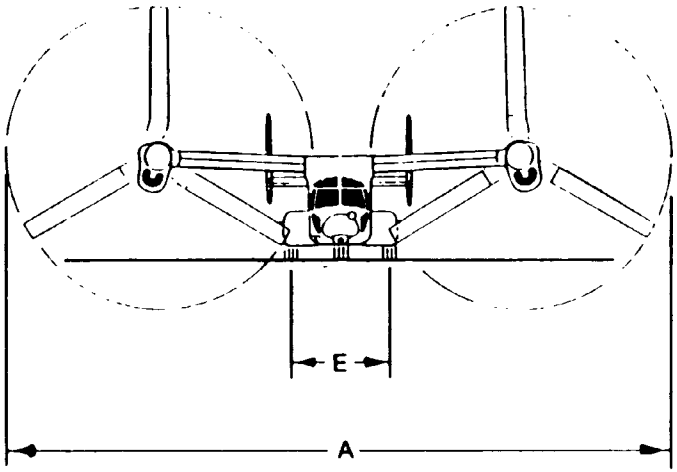

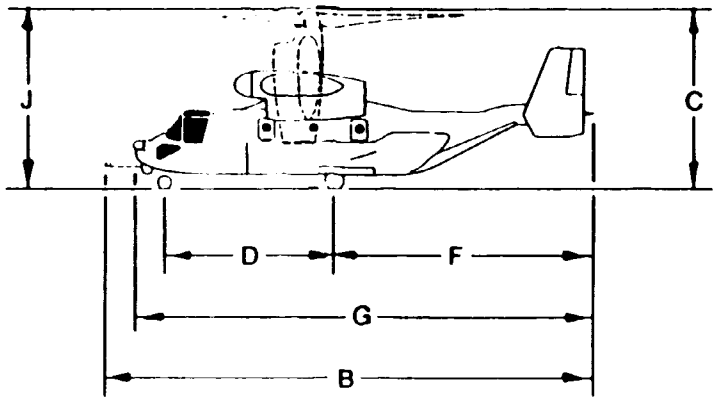

Figure C-138. Bell/Boeing 301 (V-22), Osprey