EM 385-1-1
3 SEPTEMBER 1996

US ARMY CORPS OF ENGINEERS

SAFETY AND HEALTH REQUIREMENTS MANUAL

DEPARTMENT OF THE ARMY
U.S. Army Corps of Engineers
Washington, D.C. 20314-1000

CESO-ZA

Manual
No. 385-1-1

3 September 1996

Safety
SAFETY AND HEALTH REQUIREMENTS

1. Purpose. This manual prescribes the safety and health requirements for all Corps of Engineers activities and operations.

2. Applicability. This manual applies to HQUSACE elements, major subordinate commands, districts, laboratories, and field operating activities (FOA). Applicability extends to occupational exposure for missions under the command of the Chief of Engineers, whether accomplished by military, civilian, or contractor personnel.

3. References.

a. 29 CFR 1910

b. 29 CFR 1926

c. 29 CFR 1960

d. EO 12196

e. FAR 52.236-13

f. DODI 6055.1

g. DODI 6055.3

h. AR 40-5

I. AR 385-10

j. AR 385-11

This manual supersedes EM 385-1-1, 1 October 1992

4. General.

a. The provisions of this manual implement safety and health standards and requirements contained in 29 CFR 1910, 29 CFR 1926, 29 CFR 1960, 30 CFR 56, Executive Order 12196, DODI 6055.1, AR 40-5, AR 385-10, AR 385-11, and AR 385-40. Where more stringent safety and occupational health standards are set forth in these requirements and regulations, the more stringent standards shall apply.

b. Mission applicability introduced in paragraph 2 above shall include the following:

(1) Construction contract work under the provisions of Federal Acquisition Regulation Clause 52.236-13, Accident Prevention. Where contract work presents hazards beyond the provisions of this manual, contracting officers will provide for special accident prevention requirements through individually prepared contracts. Note: Existing contracts will continue to apply the provisions of the 1 October 1992 edition of this manual until contract completion.

(2) Service and supply contracting actions. Compliance with this manual shall be a contract requirement for such activities when technical representatives (proponent in coordination with safety and health professionals) advise that special precautions are appropriate.

(3) For service, supply, and research and development contracting actions for hazardous, toxic, and radioactive waste site investigation, design, or remediation activities, compliance with this manual shall be a contract requirement.

c. Waivers. Within the Corps of Engineers, waivers to provisions of this manual require the approval of the Chief of Safety and Occupational Health, HQUSACE. Waivers shall provide an equal or greater level of protection, shall be substantiated with a hazard analysis of the activity, and shall be documented and forwarded

EM 385-1-1
3 Sep 96

through channels to Chief of Safety and Occupational Health, HQUSACE.

d. Exceptions. Some of the technical requirements of this manual may not always be applicable to overseas activities due to conflicting circumstances, practices, and laws or regulations of the locality or the unavailability of equipment. In such instances, means other than the ones specified in this manual may be used to achieve the required protection. When this occurs, a hazard analysis must be made to document that the required protection will be achieved by the alternate means.

e. Unless otherwise indicated, when publications are referenced in this manual the most recent edition is to be used.

f. Underlining indicates new or changed text.

g. Supplementation of this manual is not authorized except as published by the Safety and Occupational Health Office, HQUSACE.

FOR THE COMMANDER:

ROBERT H. GRIFFIN
Colonel, Corps of Engineers
Chief of Staff

EM 385-1-1
3 Sep 96

TABLE OF CONTENTS

Section	Page
1. Program Management	1
A. General	1
B. Indoctrination and Training	5
C. Physical Qualifications of Employees	7
D. Accident Reporting and Recordkeeping	8
E. Emergency Planning	10
Definitions	11
2. Sanitation	13
A. Drinking Water	13
B. Toilets	14
C. Washing Facilities	16
D. Food Service	17
E. Waste Disposal	18
F. Vermin Control	18
3. Medical and First Aid Requirements	19
A. General	19
B. First Aid Kits	21
C. First Aid Stations and Infirmaries	21
D. Personnel Requirements and Qualifications	22
4. Temporary Facilities	25
A. General	25
5. Personal Protective and Safety Equipment	27
A. General	27
B. Eye and Face Protection	30
C. Hearing Protection and Noise Control	34
D. Head Protection	36
E. Respiratory Protection	38
F. Body Belts, Harnesses, Lanyards, and Lifelines - Selection of Components	45
G. Safety and Debris Nets - Design and Testing	47
H. Electrical Protective Equipment	48

I. Personal Floatation Devices 49
J. Lifesaving and Safety Skiffs 51
Definitions 53

6. Hazardous Substances, Agents, and Environments 57
A. General 57
B. Hazardous Substances 59
C. Hot Substances 61
D. Harmful Plants, Animals, and Insects 62
E. Ionizing Radiation 63
F. Nonionizing Radiation and Magnetic and Electric Fields 71
G. Ventilation and Exhaust Systems 74
H. Abrasive Blasting 75
I. Confined Space 76
J. Inclement Weather and Environmental Hazards 87
K. Cumulative Trauma Prevention 91
Definitions 91

7. Lighting 99
A. General 99

8. Accident Prevention Signs, Tags, Labels, and Signals and Piping System Identification 101
A. Signs, Tags, Labels, and Piping Systems 101
B. Signal Systems, Personnel, and Procedures 104

9. Fire Prevention and Protection 117
A. General 117
B. Flammable and Combustible Liquids 121
C. Liquefied Petroleum Gas (LP-Gas) 127
D. Temporary Heating Devices 131
E. First Response Fire Protection 136
F. Fixed Fire Suppression Systems 140
G. Fire Fighting Equipment 142
H. Fire Detection and Employee Fire Alarm Systems 142

I. Fire Fighting Organizations - Training and Drilling 144
J. Fire Patrols 144
K. Wildfire Control 145
Definitions 146

10. Welding and Cutting 151
A. General 151
B. Respiratory Protection 152
C. Fire Protection 154
D. Oxyfuel Gas Welding and Cutting 156
E. Arc Welding and Cutting 158
F. Gas Metal Arc Welding 160
Definitions 160

11. Electrical 163
A. General 163
B. Overcurrent Protection, Disconnects, and Switches 167
C. Grounding 169
D. Temporary Wiring and Lighting 173
E. Operations Adjacent to Overhead Lines 175
F. Batteries and Battery Charging 178
G. Hazardous (Classified) Locations 179
H. Power Transmission and Distribution 182
I. Underground Electrical Installations 197
J. Work in Energized Substations 198
K. Communication Facilities 200
Definitions 200

12. Control of Hazardous Energy (Lockout/Tagout) 205
A. General 205
B. Training 208
C. Periodic Inspections 209
D. Lockout and Tagout Devices 209
E. Applying and Removing Lockout and Tagout Devices 210
Definitions 213

13. Hand and Power Tools 217
A. General 217
B. Grinding and Abrasive Machinery 219
C. Power Saws and Woodworking Machinery 220
D. Pneumatic Tools 222
E. Explosive-Actuated Tools 223
F. Chain Saws 225
G. Abrasive Blasting Machinery 225
Definitions 226

14. Material Handling, Storage, and Disposal 227
A. Material Handling 227
B. Material Storage 228
C. Housekeeping 230
D. Material Disposal 232

15. Rigging 235
A. General 235
B. Wire Rope 236
C. Chain 237
D. Fiber Rope (Natural and Synthetic) 237
E. Slings 240
F. Rigging Hardware 240
Definitions 244

16. Machinery and Mechanized Equipment 247
A. General 247
B. Guarding and Safety Devices 253
C. Cranes and Derricks - General 258
D. Crawler-, Truck-, Wheel-, and Ringer-Mounted Cranes 268
E. Portal, Tower, and Pillar Cranes 273
F. Floating Cranes and Floating Derricks 275
G. Overhead and Gantry Cranes 278
H. Monorails and Underhung Cranes 279
I. Derricks 279
J. Helicopter Cranes 280
K. Material Hoists 283

L. Piledrivers 286
M. Drilling Equipment 289
Definitions 292

17. Conveyors 299
A. General 299
B. Operation 305
Definitions 307

18. Motor Vehicles and Aircraft 309
A. General 309
B. Operating Rules 313
C. Transportation of Personnel 315
D. All Terrain Vehicles (ATV) 316
E. Aircraft 317
Definitions 318

19. Floating Plant and Marine Activities 319
A. General 319
B. Access 330
C. Launches, Motorboats, and Skiffs 332
D. Dredging 333
E. Navigation Locks and Locking 335
Definitions 336

20. Pressurized Equipment and Systems 337
A. General 337
B. Compressed Air and Gas Systems 341
C. Boilers and Systems 344
D. Compressed Gas Cylinders 346
Definitions 348

21. Safe Access and Fall Protection 351
A. General 351
B. Standard Guardrails and Handrails 357
C. Personal Fall Protection Devices and Safety Nets 360
D. Ladders 364

E. Stairways 368
F. Ramps, Runways, and Trestles 370
G. Crane- and Derrick-Hoisted Personnel Platforms 371
H. Personnel Hoists and Elevators 376
I. Access and Haul Roads 378
Definitions 379

22. Work Platforms 383
A. General 383
B. Scaffolds - General 384
C. Metal Scaffolds and Towers 387
D. Scaffolds - Wood Pole 391
E. Scaffolds - Suspended 393
F. Crane Supported Work Platforms 403
G. Form and Carpenter's Bracket Scaffold 405
H. Horse Scaffolds 407
I. Pump Jack Scaffolds 407
J. Elevating Work Platforms 409
K. Vehicle-Mounted Elevating and Rotating Work Platforms 411
Definitions 412

23. Demolition 423
A. General 423
B. Debris Removal 426
C. Wall Removal 428
D. Floor Removal 429
E. Steel Removal 430
F. Mechanical Demolition 430
Definitions 431

24. Floor and Wall Holes and Openings 433
A. General 433
Definitions 434

25. Excavations 435
A. General 435

B. Safe Access 439
C. Sloping and Benching 440
D. Support Systems 441
E. Cofferdams 444
Definitions 445

26. Underground Construction (Tunnels), Shafts And Caissons 449
A. General 449
B. Hazardous Classifications 458
C. Air Monitoring, Air Quality Standards, And Ventilation 460
D. Fire Prevention and Protection 466
E. Drilling 469
F. Shafts 471
G. Hoisting 472
H. Caissons 473
I. Compressed Air Work 474
J. Underground Blasting 475
Definitions 478

27. Concrete and Masonry Construction and Steel Erection 479
A. Concrete and Masonry Construction - General 479
B. Formwork and Shoring 481
C. Precast Concrete Operations 486
D. Lift-Slab Operations 486
E. Structural Steel Assembly 488
F. Flooring 489
G. Masonry Construction 491
H. Roofing 493
Definitions 497

28. Hazardous, Toxic, and Radioactive Waste (HTRW) And Underground Storage Tank (UST) Activities 499
A. General 499
B. Safety and Health Program 502

C. Site Characterization and Analysis and Initial Site Entry 504
D. Training 506
E. Personal Protective Equipment 508
F. Monitoring and Sampling 509
G. Underground Storage Tank Removal 510
H. Handling Drums and Containers 511
I. Decontamination 515
J. Emergency Response 517
K. Resource Conservation and Recovery Act Operations 519
Definitions 520

29. Blasting 523
A. General 523
B. Transportation of Explosive Materials 528
C. Handling of Explosive Materials 530
D. Electromagnetic Radiation 531
E. Vibration and Damage Control 532
F. Drilling and Loading 534
G. Wiring 537
H. Firing 539
I. Post-Blast Procedures 541
J. Underwater Blasting 542
Definitions 543

30. Contract Diving Operations 545
A. General 545
B. SCUBA Diving Operations 550
C. Surface Supplied Air Operations 551
D. Mixed-Gas Diving Operations 553
E. Equipment Requirements 554
F. Advanced Diving Technology 557
Definitions 558

31. Tree Maintenance and Removal 561
A. General 561
B. Tree Climbing 563

C. Felling 564
D. Brush Removal and Chipping 565
E. Other Operations and Equipment 567
Definitions 570

32. Airfield Operations 573
A. General 573
Definitions 575

Appendices
A - Minimum Basic Outline for Accident Prevention Plan A-1
B - Emergency Operations B-1
C - Guidelines for Control of Occupational Exposure to Crystalline Silica and Abrasive Blasting C-1
D - Assured Equipment Grounding Conductor Program D-1
E - Woodworking Machinery Guarding E-1
F - Rigging Inspection and Removal Criteria F-1
G - Procedures for the Examination and Qualification of USACE Crane Operators G-1
H - Crane and Derrick Inspection Criteria H-1
I - Crane Testing, Requirements for Performance Tests I-1
J - Ladders, Ramps, Stairs and Fixed Ladders J-1
K - Medical Surveillance Requirements for HTRW Activities K-1
L - Levels of Protection for HTRW Activities L-1
M - (reserved) M-1
N - Manning Levels for Dive Teams N-1
O - Recommended Safe Practices for Tree Maintenance and Removal Operations O-1
P - Metric Conversion Table P-1
Q - Resources Q-1
R - Acronyms R-1
S - Index S-1

SECTION 1

PROGRAM MANAGEMENT

01.A GENERAL

01.A.01 No person shall be required or instructed to work in surroundings or under conditions that are unsafe or dangerous to his or her health.

01.A.02 The employer shall be responsible for initiating and maintaining a safety and health program that complies with the US Army Corps of Engineers (USACE) safety and health requirements.

01.A.03 Each individual employee is responsible for complying with applicable safety requirements, wearing prescribed safety equipment, and preventing avoidable accidents.

01.A.04 Safety and health programs, documents, signs, and tags shall be communicated to employees in a language that they understand.

01.A.05 On USACE activities where employees are engaged in other than routine office/administrative functions, a project safety and health plan shall be developed and implemented. ***> see Section 28 for hazardous, toxic and radioactive waste activities***

a. Such activities include operations and maintenance; recreational resource management; surveying, inspection, and testing; construction management; warehousing; transportation; research and development; and other activities when the designated authority and the command safety and occupational health office agree on the benefit of such a program in accident prevention.

b. The project safety and health plan should address applicable items listed in Appendix A in addition to the USACE Command's safety and occupational health program requirements.

01.A.06 A position hazard analysis shall be prepared and documented for each USACE position as warranted by the hazards associated with the position's tasks.

a. The designated authority, using the advice of the safety and occupational health office, shall determine the need for an analysis for each position within his or her area of responsibility.

b. In developing the analysis for a particular position, supervisors should draw upon the knowledge and experience of employees in that position and the safety and occupational health office.

01.A.07 Before initiation of work at the job site, an accident prevention plan - written by the prime contractor for the specific work and hazards of the contract and implementing in detail the pertinent requirements of this manual - will be reviewed and found acceptable by designated Government personnel. ***> See 28.B.01 and Appendix A***

a. The plan will be developed by qualified personnel and will be signed by a competent person and a representative of the prime contractor's project management team.

b. On contract operations the contractor's plan will be job-specific and will include work to be performed by subcontractors and measures to be taken by the contractor to control hazards associated with materials, services, or equipment provided by suppliers.

01.A.08 Inspections.

a. The accident prevention plan shall provide for frequent safety inspections, conducted by competent persons, of the work sites, material, and equipment to ensure compliance with the plan and this manual.

b. In addition to the requirements of subparagraph a., contractor quality control personnel - as part of their quality control

responsibilities - shall conduct and document daily safety inspections.

c. Identified safety and health issues and deficiencies, and the actions, timetable, and responsibility for correcting the deficiencies, shall be recorded in inspection reports: follow-up inspections to ensure correction of any identified deficiencies shall be conducted and documented in a like manner.

01.A.09 Before beginning each activity involving a type of work presenting hazards not experienced in previous project operations or where a new work crew or subcontractor is to perform the work, activity hazard analyses shall be prepared by the contractors performing the work activity. ***> See Figure 1-1 for outline of analysis***

a. Analyses will define the activities being performed and identify the sequences of work, the specific hazards anticipated, and the control measures to be implemented to eliminate or reduce each hazard to an acceptable level.

b. Work will not begin until the hazard analysis for the work activity has been accepted by the Government's designated authority and discussed with all engaged in the activity, including the contractor, subcontractor(s), and Government on-site representatives.

01.A.10 An activity hazard analysis shall be prepared and documented for each USACE activity as warranted by the hazards associated with the activity. Generally, an activity hazard analysis shall be prepared for all field operations.

a. The designated authority, using the advice of the safety and occupational health office, shall determine the need for an analysis for each activity within their area of responsibility.

b. In developing the analysis for a particular activity, supervisors should draw upon the knowledge and experience of employees

FIGURE 1-1

ACTIVITY HAZARD ANALYSIS

ACTIVITY _____ ANALYZED BY/DATE _____

PRINCIPAL STEPS	POTENTIAL SAFETY/HEALTH HAZARDS	RECOMMENDED CONTROLS
Identify the principal steps involved and the sequence of work activities	*Analyze each principal step for potential hazards*	*Develop specific controls for each potential hazard*

EQUIPMENT TO BE USED	INSPECTION REQUIREMENTS	TRAINING REQUIREMENTS
List equipment to be used in the work activity	*List inspection requirements for the work activity*	*List training requirements, including hazard communication*

in that activity and the safety and occupational health office.

01.A.11 To assure compliance with this manual, the contractor may be required to prepare for review specific safety and occupational health submittal items. These submittal items may be specifically required by this manual or may be identified in the contract or by the Contracting Officer's Representative (COR).

01.B INDOCTRINATION AND TRAINING

01.B.01 Employees shall be provided safety and health indoctrination and continuing safety and health training to enable them to perform their work in a safe manner. All training required by this manual shall be conducted by a qualified person(s).

01.B.02 Indoctrination and training shall be based on the safety and health program of the contractor or Government agency, as applicable, and shall include but not be limited to:

a. requirements and responsibilities for accident prevention and maintaining safe and healthful work environments;
b. general safety and health policy and procedures and pertinent provisions of this manual;
c. employee and supervisor responsibilities for reporting all accidents;
d. provisions for medical facilities and emergency response and procedures for obtaining medical treatment or emergency assistance;
e. procedures for reporting and correcting unsafe conditions or practices; and
f. job hazards and the means to control/eliminate those hazards, including applicable position and/or activity hazard analyses.

01.B.03 Safety meetings shall be conducted to review past activities, plan for new or changed operations, review pertinent aspects of appropriate activity hazard analyses (by trade), establish safe working procedures for anticipated hazards, and provide

pertinent safety and health training and motivation.

a. Meetings shall be conducted at least once a month for all supervisors on the project location and at least once a week by supervisors or foremen for all workers.

b. Meetings shall be documented, including the date, attendance, subjects discussed, and names of individual(s) who conducted the meeting. Documentation shall be maintained and copies furnished to the designated authority on request.

01.B.04 A hazard communication program shall be implemented in accordance with 29 CFR 1910.1200 or 1926.59.

a. The written hazard communication program shall address, as a minimum, the following: training (to include potential safety and health effects from exposure), labeling, current inventory of hazardous chemicals on site, and the location and use of Material Safety Data Sheets (MSDSs).

b. When hazardous substances are brought onto the job site, all employees potentially exposed to the substance will be advised of information in the MSDS for the substance.

c. A copy of the MSDS for each hazardous substance at the project will be maintained in an inventory and will be provided to the designated authority and made available to all potentially exposed employees. For emergency response purposes, each entry in the inventory shall include the approximate quantities (e.g., liters, kilograms, gallons, pounds) that will be on site at any given time. In addition, a site map will be attached to the inventory showing where inventoried hazardous substances are stored. The inventory and the site map will be updated as frequently as necessary to ensure accuracy. ***> The inventory and site map shall be integrated into requirements of this Section and paragraph 06.B.01***

01.B.05 Emergency situations.

a. The employer shall provide training in handling emergency situations that may arise in the activities or use of equipment on the project.

b. All persons who may have occasion to use emergency and rescue or lifesaving equipment shall be familiarized with the location of the equipment, trained in the proper use of the equipment and its capabilities and limitations, and medically qualified for its use.

01.C PHYSICAL QUALIFICATIONS OF EMPLOYEES

01.C.01 All persons shall be physically, medically, and emotionally qualified for performing the duties to which they are assigned. Some factors to be considered in making work assignments are strength, endurance, agility, coordination, and visual and hearing acuity.

01.C.02 At no time while on duty may employees use or be under the influence of alcohol, narcotics, intoxicants, or similar mind-altering substances. Employees found under the influence of or consuming such substances will be immediately removed from the job site. ***> See Appendix A***

01.C.03 Operators of any equipment or vehicle shall be able to read and understand the signs, signals, and operating instructions in use.

01.C.04 Operators shall not be permitted to operate beyond the following limits.

a. Operators of hoisting equipment, mobile construction equipment and draglines shall not be permitted to exceed 10 hours of duty time in any 24-hour period, including time worked at another occupation, without an interval of eight consecutive hours of rest.

b. Operators of other equipment and motor vehicles, while on duty, shall not operate equipment or vehicles for a continuous period of more than 10 hours in any 24-hour period without at least eight consecutive hours of rest; nor shall any employees, while on duty, operate any equipment or motor vehicles after being in a duty status for more than 12 hours during any 24-hour period without at least eight consecutive hours of rest. ***> Variation in these requirements requires documented approval of the designated authority and notification of the Command's Safety and Occupational Health Office***

01.C.05 Compressed air workers.

a. No person shall be permitted to enter a compressed air environment until examined by a licensed physician and found to be physically qualified to engage in such work.

b. Any person working in a compressed air environment who is absent from work for 10 or more days, or is absent due to sickness or injury, shall not resume work until reexamined by a licensed physician, and found to be physically qualified to work in a compressed air environment.

c. After a person has been continuously employed in compressed air for a period designated by a physician, but not to exceed one year, that person shall be reexamined by a physician to determine if still physically qualified to engage in compressed air work.

d. All other requirements for compressed air work will be as specified in the contract technical provisions.

01.D ACCIDENT REPORTING AND RECORDKEEPING

01.D.01 All accidents that occur incidently to an operation, project, or facility for which this manual is applicable will be investigated, reported, and analyzed as prescribed by the Government's

designated authority.

a. Employees are responsible for reporting all injuries or occupationally-related illnesses as soon as possible to their employer or immediate supervisor.

b. Employers and immediate supervisors are responsible for reporting all injuries to the designated authority within 24 hours.

c. No supervisor shall decline to accept a report of injury from a subordinate.

01.D.02 An accident with any of the consequences listed below shall be immediately reported to the Government's designated authority: these accidents will be investigated in depth to identify all causes and to recommend hazard control measures.
> Contractors are responsible for notifying the Occupational Safety and Health Administration when one or more of their employees are seriously injured

a. fatal injury,
b. three or more persons admitted to a hospital, or
c. property damage in an amount specified by the designated authority.

01.D.03 Except rescue and emergency measures, the accident scene shall not be disturbed until it has been released by the investigating official.

01.D.04 Daily records of all first aid treatments not otherwise reportable shall be maintained on prescribed forms and furnished to the designated authority upon request.

01.D.04 In addition to any other applicable requirements of this section on contract operations the prime contractor shall:

a. maintain records of all exposure and accident experience incidental to the work (this includes exposure and accident

experience of the prime contractor and subcontractors, and as a minimum these records shall include exposure work-hours and a log of occupational injuries and illnesses - OSHA Form 200 or equivalent as prescribed by 29 CFR 1904);

b. maintain records of employee exposure to toxic materials and harmful physical agents (the prime contractor shall immediately notify the designated authority and employees of any excessive exposure experience and the hazard control measures that will be taken to control the exposure);

c. maintain access to the project's Workers Compensation Claims Report that details the compensable accidents experienced on the project by the contractor and subcontractor; and

d. submit project man-hours (also referred to as hours worked or exposure) to the COR monthly on the form provided by the COR.

01.E EMERGENCY PLANNING

01.E.01 Emergency plans to ensure employee safety in case of fire or other emergency shall be prepared, in writing, and reviewed with all affected employees. Emergency plans shall be tested to ensure their effectiveness.

a. Plans shall include escape procedures and routes; critical plant operations; employee accounting following an emergency evacuation; rescue and medical duties; means of reporting emergencies; persons to be contacted for information or clarification.

b. On-site emergency planning shall be integrated with off-site emergency support.

01.E.02 Planning for any operation shall include the total system response capabilities to minimize the consequences of accidents or natural disaster and shall consider communications, rescue, first aid, medical, emergency response, emergency equipment, and training requirements.

01.E.03 The number of persons permitted in any location shall be

limited to rescue and escape capability.

01.E.04 Emergency alert systems shall be developed, tested, and used to alert all persons likely to be affected by existing or imminent disaster conditions and to alert and summon emergency responders.

01.E.05 Emergency telephone numbers and reporting instructions for ambulance, physician, hospital, fire, and police shall be conspicuously posted at the work site.

01.E.06 An employee working alone in a remote location or away from other workers shall be provided a means of emergency communications.

DEFINITIONS

Accident prevention plan: a document that outlines occupational safety and health policy, responsibilities, and program requirements.

Activity hazard analysis: a documented process by which the steps (procedures) required to accomplish a work activity are outlined, the actual or potential hazards of each step are identified, and measures for the elimination or control of those hazards are developed.

Command: the USACE Major Subordinate Command, District, Laboratory, or Field Operating Activity with responsibility for a particular activity.

Competent person: one who can identify existing and predictable hazards in the working environment or working conditions that are dangerous to personnel and who has authorization to take prompt corrective measures to eliminate them.

Designated authority: the senior person in charge or his/her appointed representative for the operation being considered.

Position hazard analysis: a documented process by which the duties (or tasks) of an employee's job position are outlined, the actual or potential hazards of each duty are identified, and measures for the elimination or control of those hazards are developed.

Qualified person: one who, by possession of a recognized degree, certificate, or professional standing, or extensive knowledge, training, and experience, has successfully demonstrated his or her ability to solve or resolve problems related to the subject matter, the work, or the project.

SECTION 2

SANITATION

02.A DRINKING WATER

02.A.01 An adequate supply of drinking water shall be provided in all places of employment. Cool water shall be provided during hot weather.

a. Drinking water shall be supplied from sources approved by Federal, State, or local health authorities or treated by chemical treatment or boiled for 10 minutes and tested: if sediment is present, the water shall be clarified. Chemical treatment shall provide a residual chlorine content of 3/10 to 3/5 ppm.

b. Specific guidance regarding chemical treatment of drinking water for overseas (OCONUS) operations should be obtained from the HQUSACE Safety and Occupational Health Office.

02.A.02 Only approved potable water systems shall be used for the distribution of drinking water.

02.A.03 Drinking water shall be dispensed by means that prevent contamination between the consumer and source.

02.A.04 Portable drinking water dispensers shall be designed, constructed, and serviced to ensure sanitary conditions, shall be capable of being closed, and shall have a tap. Containers shall be clearly marked as to their contents and shall not be used for other purposes. Water shall not be dipped from containers.

02.A.05 Fountain dispensers shall have a guarded orifice.

02.A.06 Use of a common cup (a cup shared by more than one worker) is prohibited without the cup being sanitized between uses. Employees shall use cups when drinking from portable water coolers/containers. Unused disposable cups shall be kept in

sanitary containers and a waste receptacle shall be provided for used cups.

02.A.07 Nonpotable water.

a. Outlets dispensing nonpotable water will be conspicuously posted **"CAUTION - WATER UNFIT FOR DRINKING, WASHING, OR COOKING**."

b. Cross-connection - open or potential - between a system furnishing potable water and a system furnishing nonpotable water is prohibited.

02.B TOILETS

02.B.01 When sanitary sewers are not available, one of the following facilities, unless prohibited by local codes, shall be provided: chemical toilets; recirculating toilets; combustion toilets, or other toilet systems as approved by state/local governments.

02.B.02 Each toilet facility shall be equipped with a toilet seat and toilet seat cover; each toilet facility - except those specifically designed and designated for females - shall be equipped with a metal, plastic, or porcelain urinal trough.

02.B.03 Toilet facilities shall be so constructed that the occupants shall be protected against weather and falling objects; all cracks shall be sealed and the door shall be tight-fitting, self-closing, and capable of being latched.

02.B.04 Adequate ventilation shall be provided and all windows and vents screened; seat boxes shall be vented to the outside (minimum vent size 10 cm (4 in) inside diameter) with vent intake located 2.5 cm (1 in) below the seat.

02.B.05 Toilet facilities shall be constructed so that the interior is lighted.

02.B.06 Toilets at construction job sites. (The requirements of this paragraph shall not apply to mobile crews having transportation readily available to nearby toilet facilities.)

a. Toilets shall be provided according to the following:

Number of employees	Minimum facilities (per sex)
20 or less	one
21 to 199	one toilet seat and one urinal for every 40 workers
200 or more	one toilet seat and one urinal for every 50 workers

Where toilet rooms may be occupied by no more than one person at a time, can be locked from the inside, and contain at least one toilet seat, separate toilet rooms for each sex need not be provided.

b. Under temporary field conditions, provisions shall be made to assure that at least one toilet facility is available.

02.B.07 Toilets at places of employment other than construction job sites.

a. Water closets, which are separate for each sex, shall be provided according to the following:

Number of employees	Minimum facilities (per sex)
1 to 15	one
16 to 35	two
36 to 55	three
56 to 80	four
81 to 110	five
111 to 150	six
over 150	one for each additional 40 persons

Where toilet rooms may be occupied by no more than one person

at a time, can be locked from the inside, and contain at least one toilet seat, separate toilet rooms for each sex need not be provided.

b. Each water closet shall occupy a separate compartment with a door that can lock from the inside and walls or partitions, between fixtures, of sufficient height to assure privacy.

02.B.08 Provisions for routinely servicing and cleaning all toilets and disposing of the sewage shall be established before placing toilet facilities into operation: the method of sewage disposal and location selected shall be in accordance with Federal, State, and local health regulations.

02.C WASHING FACILITIES

02.C.01 Washing facilities shall be provided as needed to maintain healthful and sanitary conditions. Washing facilities for persons engaged in the application of paints, coatings, herbicides, insecticides, or other operations where contaminants may be harmful shall be at or near the work site and shall be adequate for removal of the harmful substance.

02.C.02 Each washing facility shall be maintained in a sanitary condition and provided with water (either hot and cold running water or tepid running water), soap, and individual means of drying.

02.C.03 Whenever employees are required by a particular standard to shower, showers shall be provided in accordance with the following:

a. one shower shall be provided for every ten employees (or fraction thereof) of each sex who are required to shower during the same shift;
b. body soap or other appropriate cleansing agent convenient to the shower shall be provided;
c. showers shall have hot and cold running water feeding a common discharge line; and

d. employees using showers shall be provided with individual clean towels.

02.C.04 Whenever employees are required by a particular standard to wear protective clothing, change rooms with storage facilities for street clothes and separate storage facilities for protective clothing shall be provided.

02.C.05 Whenever working clothes are provided by an employer and become wet or are washed between shifts, provision shall be made to ensure such clothing is dry before reuse.

02.D FOOD SERVICE

02.D.01 All cafeterias, restaurants, mess facilities, and related facilities on areas, projects, or installations shall be established, operated, and maintained in compliance with the health and sanitation recommendations of the United States Public Health Service and applicable State and local regulations.

02.D.02 All food service operations shall be carried out in a sound manner. Food shall be free from spoilage and kept uncontaminated throughout the storage, preparation, and serving process.

02.D.03 No food or beverage shall be consumed or stored in a toilet room or in any area exposed to a toxic material.

02.D.04 An adequate number of waste receptacles shall be provided in the food service area. Receptacles shall be constructed of corrosion resistant or disposable material, provided with solid tight-fitting covers (covers may be omitted where sanitary conditions can be maintained without the use of a cover), emptied at least daily, and maintained in a sanitary condition.

02.E WASTE DISPOSAL

02.E.01 Receptacles used for putrescible or dangerous waste material shall be so constructed to prevent leakage and to allow thorough cleaning and sanitary maintenance; these receptacles shall be equipped with a solid tight-fitting cover, unless it can be maintained in sanitary condition without a cover. ***> Disposal of rubbish, debris, and litter is covered in section 14.D***

02.E.02 Solid and liquid waste shall be removed in a way that avoids creating a menace to health and as often as necessary to maintain a sanitary environment.

02.F VERMIN CONTROL

02.F.01 Enclosed workplaces shall be constructed and maintained, as far as practical, to prevent the entrance or harborage of rodents, insects, and other vermin. An effective extermination program shall be instituted where the presence of such vermin is detected.

SECTION 3

MEDICAL AND FIRST AID REQUIREMENTS

03.A GENERAL

03.A.01 Prior to start of work, arrangements shall be made for medical facilities and personnel to provide prompt attention to the injured and for consultation on occupational safety and health matters.

a. Communication and transportation to effectively care for injured workers shall be provided.

b. The telephone numbers of physicians, hospitals, or ambulances shall be conspicuously posted (at the minimum, these numbers shall be posted at the on-site project office telephones).

03.A.02 First aid and CPR training.

a. When a medical facility or physician is not accessible within five minutes of an injury to a group of two or more employees for the treatment of injuries, at least two employees on each shift shall be qualified to administer first aid and CPR.
> Minimum qualifications are listed in 03.D

b. Individuals who are required to work alone in remote areas shall be trained in first aid.

03.A.03 First aid and medical facility requirements.

a. All projects, activities, installations, or contracts on which less than 100 persons are employed (greatest total number of employees on a shift) at the site of the work, and where neither a first aid station nor infirmary is available, shall be provided 16-unit first aid kits or kits approved by a licensed physician in the ratio of one for every 25 persons or less.

b. All projects, activities, installations, or contracts on which more than 99 and less than 300 persons are employed (greatest total number of employees on a shift) at the site of the work shall establish and equip, as directed by a licensed physician, a first aid station. In non-rural locations, medical clinics, hospitals, or doctors' office, accessible within five minutes of an injury may be approved for use provided the requirements of 03.A.03a are met.

c. Where tunnels are being excavated, a first aid station and transportation facilities shall be provided so that treatment is available within five minutes of the occurrence of an injury.

d. All projects, activities, installations, or contracts on which 300 or more persons are employed (greatest total number of employees on a shift) at the site of the work shall establish and equip, as directed by a licensed physician, an infirmary.

03.A.04 When any part of the body may be exposed to toxic or corrosive materials, drenching and/or flushing facilities shall be provided in the work area for immediate emergency use. ***> See Section 06.B***

03.A.05 When persons are exposed to epoxy resins, solvents, hydrocarbons, cement, lime, or other dermatitis-producing substances, ointment recommended by the manufacturer for the specific exposure shall be available and used. ***> See Section 06.B***

03.A.06 Employees designated as responsible for rendering first aid or medical assistance shall be:

a. included in their employer's blood-borne pathogen program in accordance with 29 CFR 1910.1030;
b. instructed in the sources, hazards, and avoidance of blood borne pathogens; and
c. provided, use, and maintain personal protective equipment (gloves, gowns, masks, eye protectors, and/or resuscitation

equipment) when appropriate for rendering first aid or other medical assistance to prevent contact with blood or other potentially infectious materials.

03.B FIRST AID KITS

03.B.01 Unless otherwise specified, where first aid kits are required they shall be 16-unit first aid kits (kits containing sixteen unit-type first aid packages). First aid kits shall comply with 29 CFR 1910.151 and 1926.50, constructed of weatherproof containers, easily accessible to all workers, and each item maintained sterile.

03.B.02 The contents of first aid kits shall be checked by the employer prior to their utilization and at least weekly when work is in progress to insure that expended items are replaced.

03.C FIRST AID STATIONS AND INFIRMARIES

03.C.01 General.

a. On activities requiring a first aid station or an infirmary, the type of facilities and equipment shall be determined by the proximity and quality of available medical services and shall be in accordance with the recommendation of a licensed physician. Alternative facilities that provide the quantity and quality of services outlined in this section may be used if recommended by a licensed physician.

b. Identification and directional markers shall be used to readily denote the location of all first aid stations and infirmaries.

c. Emergency lighting shall be provided for all first aid stations and infirmaries.

03.C.02 A first aid attendant shall be on duty in first aid stations at all hours when work is in progress (except when on emergency calls).

03.C.03 Infirmaries.

a. Infirmaries shall provide reasonably quiet, privacy, light, climate control, adequate toilet facilities, hot and cold water, drainage, and electrical outlets; walls and ceilings shall be finished with the equivalent of two coats of white paint; windows and doors will be screened; floors shall be of impervious construction.

b. A properly equipped emergency vehicle, helicopter, or mobile first aid unit shall be provided during work hours at sites requiring an infirmary. The emergency vehicle shall not be used for any other purpose except that the helicopter may be used for shift crew changes.

c. A registered nurse (RN), a licensed physician's assistant, a certificated emergency medical technician (EMT), or a licensed practical nurse (LPN), if the LPN is approved by a licensed physician, shall be assigned on a full-time basis to each installation requiring an infirmary.

03.D PERSONNEL REQUIREMENTS AND QUALIFICATIONS

03.D.01 All projects, installations, activities, or contracts on which 1,000 persons or more are employed (greatest total aggregate number of employees on a shift) shall have the full-time services of a licensed physician. An EMT having direct communication with a licensed physician may be used when a full-time physician is not available.

03.D.02 First aid attendants shall hold certification in first aid and cardiopulmonary resuscitation (CPR) training from the American Red Cross, from an agency whose training is deemed equivalent by the American Red Cross (and this equivalency is stated in writing), or from a licensed physician. The certificate shall not be older than three years from date of issue, unless the currency period is specified otherwise by the issuing agency.

03.D.03 First aid attendants, RNs, licensed physicians' assistants, LPNs, and EMTs shall be under the direction of a licensed physician.

03.D.04 Military personnel with equivalent qualifications may be used in lieu of the above personnel.

SECTION 4

TEMPORARY FACILITIES

04.A GENERAL

04.A.01 Plans for the layout of temporary construction buildings, facilities, fencing, and access routes and anchoring systems for temporary structure shall be submitted to and approved by the designated authority. ***> See 09.A.18 for temporary facility spacing requirements; Section 11 for temporary power distribution approval requirements; and Sections 21 and 22 for temporary ramp, trestle, scaffold, and platform approval requirements***

04.A.02 The design and construction of temporary structures shall consider the following loadings (reference ASCE 7-88):

a. dead and live loads,
b. soil and hydrostatic pressures,
c. wind loads, and
d. rain and snow loads.

04.A.03 Trailers and other temporary structures used as field offices, to house personnel, or for storage shall be anchored with rods and cables or by steel straps to ground anchors: the anchor system shall be designed to withstand winds and must meet applicable state or local standards for anchoring mobile trailer homes.

04.A.04 Fencing and warning signs.

a. Temporary project fencing (or a substitute acceptable to the government's designated authority and delineated in the accident prevention plan) shall be provided on all projects located in areas of active use by members of the public. Consideration will also be given to those areas proximate to family housing areas and/or school facilities.

b. Signs warning of the presence of construction hazards and

requiring unauthorized persons to keep out of the construction area shall be posted on the fencing. At the minimum, posting shall be on all fenced sides of the project and spaced one sign every 90 m (300 feet). ***> See also Section 08***

c. For areas of minimal public exposure, fencing is not required but signs, warning of construction hazards, shall be posted.

04.A.05 Temporary sleeping quarters shall be heated, ventilated, lighted, and maintained in a clean and safe condition.

04.A.06 Unless otherwise indicated, throughout this manual lumber dimensions are given in nominal sizes.

SECTION 5

PERSONAL PROTECTIVE AND SAFETY EQUIPMENT

05.A GENERAL

05.A.01 Responsibilities.

a. Based on hazard assessments, employers shall select, and have each affected employee use, personal protective equipment (PPE) that will protect the employee from hazards. ***> See also 06.A.02***

b. Employers shall communicate PPE decisions to each affected employee and select PPE that properly fits each affected employee.

c. Employees shall use any PPE that may be required to maintain their exposure within acceptable limits.

05.A.02 Employees shall be physically able and medically determined qualified to use the personal protective and safety equipment that may be required in their job duties.

05.A.03 Employers shall ensure users of personal protective and safety equipment are trained to know the following: when PPE, and what PPE, is necessary; how properly to don, doff, adjust, and wear PPE; limitations of the PPE; and proper care, inspection, testing, maintenance, useful life, storage, and disposal of the PPE.

a. Each affected employee shall demonstrate an understanding of this training and the ability to use PPE properly before being allowed to perform work requiring the use of PPE.

b. When the employer has reason to believe that any affected employee who has been trained does not have the understanding and skill required of the training, the employer shall retrain the employee.

c. The employer shall verify that each affected employee has received and understood the required training by a written certification that identifies the name of each employee trained, the date(s) of the training, and the subjects taught.

05.A.04 A copy of the manufacturer's use, inspection, testing, and maintenance instructions shall be maintained with the personal protective and safety equipment.

05.A.05 Personal protective and safety equipment shall be tested, inspected, and maintained in serviceable and sanitary condition as recommended by the manufacturer.

a. Defective or damaged equipment shall not be used.

b. Before being stored or reissued to another person, equipment shall be cleaned, disinfected, inspected and repaired.

05.A.06 When employees provide their own equipment, the employer is responsible for assuring its adequacy in protecting against the hazard and its state of repair.

05.A.07 Minimum requirements.

a. Employees shall wear clothing suitable for the weather and work conditions: the minimum for field work shall be short sleeve shirt, long trousers, and leather or other protective work shoes or boots.

b. Protective equipment shall be of heat/fire-resistive material when conditions require protection against such hazards.

05.A.08 Protective footwear, such as rubber boots, protective covers, ice clamp-ons, and steel-toed safety boots, shall be worn by all persons exposed to hazards to the feet (including, but not limited to, puncture, slipping, electrical, or chemical hazards).

a. For all activities in which Corps or contractor personnel or official visitors are potentially exposed to foot hazards, the applicable position/activity hazard analysis, accident prevention plan, or project safety and health plan shall include an analysis of, and prescribe specific protective measures to be taken for, reducing foot hazards.

b. Footwear providing protection against impact and compressive forces, conduction hazards, electrical hazards, and sole puncture shall meet the applicable requirements of ANSI Z41: footwear providing protection against impact and compression hazards shall be rated as I75 and C75.

c. Unexploded ordnance (UXO) sweep personnel shall have no metal parts in or on their footwear.

05.A.09 Miners' lights and flashlights used around explosives and in atmospheres likely to contain explosive vapors, dusts, or gases shall be approved by the Mine Safety and Health Administration (MSHA) or National Institute for Occupational Safety and Health (NIOSH) for use in such locations.

05.A.10 Persons involved in activities which subject the hands to injury (e.g., cuts, abrasions, punctures, burns, chemical irritants, toxins, vibration, and forces which can restrict blood flow) shall use hand protection appropriate for the hazard.

05.A.11 Persons exposed to vehicular or equipment traffic, including signalpersons, spotters, or inspectors, shall wear belts or apparel marked with a reflectorized or high-visibility material.

05.A.12 Overhead protection shall be provided where the public or workers are subject to injury from falling objects.

05.A.13 Persons shall not be permitted to work above or in positions exposed to protruding reinforcing steel or other impalement hazards unless provisions have been made to eliminate the impalement hazard.

05.B EYE AND FACE PROTECTION

05.B.01 Persons shall be provided with eye and face protective equipment, as outlined in Table 5-1, when machines or operations present potential eye or face injury from physical, chemical, or radiation agents.

a. All eye and face protection equipment shall meet the requirements of ANSI Z87.1, *Practice for Occupational and Educational Eye and Face Protection*, and bear a legible and permanent "Z87" logo to indicate compliance with the standard.

b. Eye and face PPE shall be distinctly marked to facilitate identification of the manufacturer.

c. Employees shall use eye protection providing side protection when exposed to hazards from flying objects.

05.B.02 When required by this regulation to wear eye protection, persons whose vision requires the use of corrective lenses in eyeglasses shall be protected by one of the following:

a. eyeglasses with protective lenses providing optical correction,
b. goggles that can be worn over corrective lenses without disturbing the adjustment of the spectacles, or
c. goggles that incorporate corrective lenses mounted behind the protective lenses.

05.B.03 Personnel working in other than administrative functions who are considered blind in one eye shall wear safety spectacles with side shields while on the job.

05.B.04 Operations that require the use of, or exposure to, hot or molten substances (e.g., babbitting, soldering, pouring or casting of hot metals, handling of hot tar, oils, liquids, and molten substances) shall require eye protection, such as goggles, with safety lenses and screens for side protection, or face masks, shields, and helmets giving equal protection. Lens mountings

TABLE 5-1

EYE AND FACE PROTECTOR SELECTION GUIDE

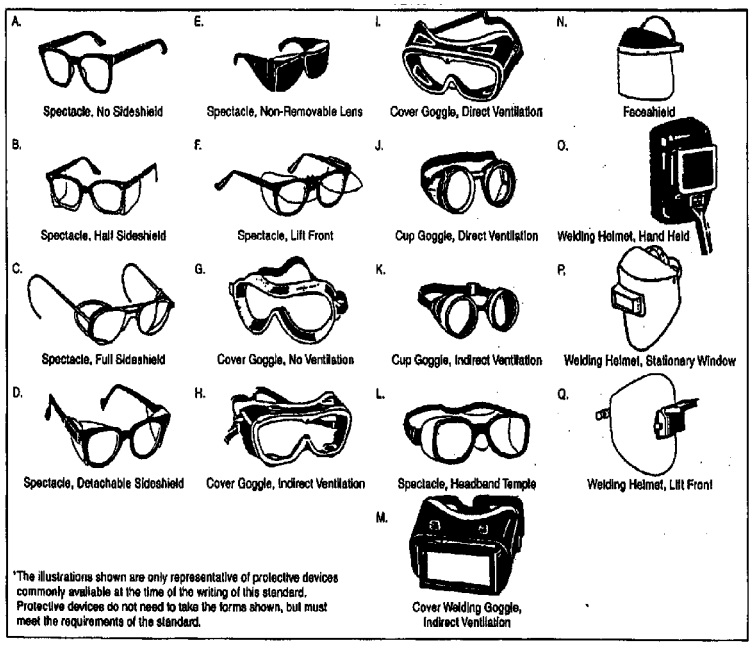

NOTES:

(1) Care shall be taken to recognize the possibility of multiple and simultaneous exposure to a variety of hazards. Adequate protection against the highest level of each of the hazards must be provided.

(2) Operations involving heat may also involve optical radiation. Protection from both hazards shall be provided.

(3) Faceshields shall only be worn over primary eye protection.

(4) Filter lenses shall meet the requirements for shade designations in Table 1.

(5) Persons whose vision requires the use of prescription (Rx) lenses shall wear either protective devices fitted with prescription (Rx) lenses or protective devices designed to be worn over regular prescription (Rx) eyewear.

(6) Wearers of contact lenses shall also be required to wear appropriate covering eye and face protection devices in a hazardous environment. It should be recognized that dusty and/or chemical environments may represent an additional hazard to contact lens wearers.

(7) Caution should be exercised in the use of metal frame protective devices in electrical hazard areas.

(8) Refer to Section 6.5, Special Purpose Lenses.

(9) Welding helmets or handshields shall be used only over primary eye protection.

(10) Non-sideshield spectacles are available for frontal protection only.

TABLE 5-1, continued

AMERICAN NATIONAL STANDARD Z87.1-1989
SELECTION CHART

		ASSESSMENT SEE NOTE (1)	PROTECTOR TYPE	PROTECTORS	LIMITATIONS	NOT RECOMMENDED
IMPACT	Chipping, grinding, machining, masonry work, riveting, and sanding.	Flying fragments, objects, large chips, particles, sand, dirt, etc.	B,C,D, E,F,G, H,I,J, K,L,N	Spectacles, goggles faceshields SEE NOTES (1) (3) (5) (6) (10) For severe exposure add N	Protective devices do not provide unlimited protection. SEE NOTE (7)	Protectors that do not provide protection from side exposure. SEE NOTE (10) Filter or tinted lenses that restrict light transmittance, unless it is determined that a glare hazard exists. Refer to OPTICAL RADIATION.
HEAT	Furnace operations, pouring, casting, hot dipping, gas cutting, and welding.	Hot sparks	B,C,D, E,F,G, H,I,J, K,L,*N	Faceshields, goggles, spectacles *For severe exposure add N SEE NOTE (2) (3)	Spectacles, cup and cover type goggles do not provide unlimited facial protection. SEE NOTE (2)	Protectors that do not provide protection from side exposure.
		Splash from molten metals	*N	*Faceshields worn over goggles H,K SEE NOTE (2) (3)		
		High temperature exposure	N	Screen faceshields. Reflective faceshields. SEE NOTE (2) (3)	SEE NOTE (3)	
CHEMICAL	Acid and chemicals handling, degreasing, plating	Splash	G,H,K *N	Goggles, eyecup and cover types. *For severe exposure, add N	Ventilation should be adequate but well protected from splash entry	Spectacles, welding helmets, handshields
		Irritating mists	G	Special purpose goggles	SEE NOTE (3)	
DUST	Woodworking, buffing, general dusty conditions.	Nuisance dust	G,H,K	Goggles, eyecup and cover types	Atmospheric conditions and the restricted ventilation of the protector can cause lenses to fog. Frequent cleaning may be required.	
OPTICAL RADIATION	WELDING: Electric Arc		O,P,Q	TYPICAL FILTER LENS SHADE / PROTECTORS SEE NOTE (9) 10-14 Welding Helmets or Welding Shields	Protection from optical radiation is directly related to filter lens density. SEE NOTE (4). Select the darkest shade that allows adequate task performance.	Protectors that do not provide protection from optical radiation. SEE NOTE (4)
	WELDING: Gas CUTTING TORCH BRAZING		J,K,L, M,N,O, P,Q	SEE NOTE (9) 4-8 Welding Goggles or Welding Faceshield 3-6 3-4	SEE NOTE (3)	
	TORCH SOLDERING		B,C,D, E,F,N	1.5-3 Spectacles or Welding Faceshield		
	GLARE		A,B	Spectacle SEE NOTE (9) (10)	Shaded or Special Purpose lenses, as suitable. SEE NOTE (8)	

16

TABLE 5-2

REQUIRED SHADES FOR FILTER LENSES AND GLASSES IN WELDING, CUTTING, BRAZING, AND SOLDERING

OPERATION	SHADE NUMBER
Soldering	2
Torch Brazing	3 or 4
Cutting (light) up to 1 inch	3 or 4
Cutting (medium) 1 to 6 inches	4 or 5
Cutting (heavy) 6 inch or more	5 or 6
Gas welding (light) up to 1/8 inch	4 or 5
Gas welding (medium) 1/8 to ½ inch	5 or 6
Gas welding (heavy) ½ inch or more	6 or 8
Atomic hydrogen welding	10 - 14
Inert-gas metal-arc welding (nonferrous) - 1/16 to 5/32 inch electrodes	11
Inert-gas metal-arc welding (ferrous) - 1/16 to 5/32 inch electrodes	12
Shielded metal-arc welding - 1/16 to 5/32 inch electrodes	10
Shielded metal-arc welding - 3/16 to 1/4 inch electrodes	12
Shielded metal-arc welding - 5/16 to 3/8 inch electrodes	14
Carbon arc welding	14

shall be able to retain in position all parts of a cracked lens.

05.B.05 Operations that require handling of harmful materials (e.g., acids, caustics, hot liquids, or creosoted materials) and operations where protection from gases, fumes, and liquids is necessary shall require the wearing of goggles with cups of soft pliable rubber or suitable face masks or hoods that cover the head and neck, and other protective clothing appropriate to the hazards involved.

05.B.06 Operations where protection from radiant energy with moderate reduction of visible light is necessary, including welding, cutting, brazing, and soldering, shall require eye and face protection suitable to the type of work, providing protection from all angles of direct exposure, and with lenses of the appropriate shade. ***> See Table 5-2***

05.B.07 Glare-resistant glasses with a minimum ultraviolet filter rating of 96% filtration at 400 nanometers shall be worn when conditions require protection against glare.

05.B.08 Tinted or automatically darkening lenses should not be worn when work tasks require the employee to pass from brightly to dimly lighted areas.

05.C HEARING PROTECTION AND NOISE CONTROL

05.C.01 Sound-pressure level limits.

a. Department of Defense (DoD) personnel shall be provided protection against the effects of hazardous noise exposure whenever sound-pressure levels exceed 85 dB(A) steady-state expressed as a time-weighted average (TWA) or 140 dB(A) impulse.

b. Non-DoD personnel shall be provided, as a minimum, protection against the effects of hazardous noise exposure whenever the sound-pressure level exceeds the limits and/or exposure times specified in Table 5-3.

05.C.02 When personnel are subjected to sound-pressure levels exceeding the limits specified below, feasible engineering or administrative controls shall be used. When such controls fail to reduce sound-pressure levels within the specified limit, PPE shall be selected, evaluated, provided and used in accordance with the hearing conservation program.

TABLE 5-3
PERMISSIBLE NON-DoD NOISE EXPOSURES

Duration/day (hours)	Sound-pressure level dB(A) slow response
8	90
6	92
4	95
3	97
2	100
1-1/2	102
1	105
1/2	110
1/4	115

When the daily noise exposure is composed of two or more periods of noise exposure of different levels, the combined effects should be considered rather than the individual effect of each. Exposure to different levels for various periods of time shall be computed according to the following formula:

$C_n = T_1/L_1 + T_2/L_2 + ... + T_3/L_3$, where;

C = combined noise exposure factor,
T = the total time of exposure at a specified sound-pressure level (in hours), and
L = the total time of exposure permitted at that level (in hours), from Table 5-3.

If C_n >/ = 1, hearing protection is required.

05.C.03 Whenever sound-pressure levels equal or exceed 85 dBA (time weighted average), a continuing, effective hearing conservation program shall be administered in accordance with 29 CFR 1910.95: for DoD personnel the hearing conservation program shall conform to DODI 6055.12 and AR 40-5.

05.C.04 When sound-pressure levels exceed 115 dB(A) steady-state, personal ear protection equivalent to the combination of earplugs and earmuffs shall be required.

05.C.05 Sound-pressure level measurements shall be made by qualified personnel using calibrated instruments.

05.C.06 Ear insert devices shall be fitted to the exposed individual by an individual trained in such fitting and able to recognize the difference between a good and a poor fit: plain cotton is not an acceptable protective device.

05.C.07 Noise hazard areas (areas in which sound-pressure levels exceed the limits specified in paragraph 05.C.01) shall be marked with caution signs indicating both the presence of hazardous noise levels and the requirement for hearing protection.

05.D HEAD PROTECTION

05.D.01 All persons working in or visiting hard hat areas shall be provided with and required to wear Class A (low voltage electrical protection) or Class B (high voltage electrical protection) protective headgear.

a. Hard hat areas are those areas with potential hazard of head injury: all construction areas are considered hard hat areas. The identification and analysis of head hazards will be documented in a hazard analysis, accident prevention plan, or project safety and health plan, as appropriate.

b. Hard hat areas shall be general areas - such as dredging, construction, alteration, demolition, quarry, or similar field activities, rather than specific portions of a building or project.

c. All points of entry to a hard hat area shall have a sign warning of the requirement to wear hard hats.

05.D.02 All protective headgear shall meet the requirements of ANSI Z89.1.

a. No modification to the shell or suspension is allowed unless approved by the manufacturer.

b. Hard hats shall be worn with the bill facing forward.

c. Protective headgear worn near electric lines and equipment shall be Class B.

05.D.03 Protective headgear and components shall be visually inspected on a daily basis for signs of damage (dents, cracks, etc.) that might reduce the degree of safety originally provided; headgear will periodically be inspected for ultraviolet degradation as evidenced by cracking or flaking of the helmet.

05.D.04 Drilling holes or in any way changing the integrity of the hard hat is prohibited.

05.D.05 Protective headgear worn by USACE employees shall (in addition to complying with the preceding specifications) be:

a. White in color and marked with a 2.5 cm (1 in) band of red reflective material placed along the base of the crown with a 12.5 cm (5 in) break in front. A red Corps of Engineers castle insignia, meeting specifications of EP 385-1-6, will be centered at the front of the hat with the base of the insignia approximately 2 cm (3/4 in) above the base of the crown. Personnel may place their name above the insignia and their organization title below the insignia: the rank of military personnel should precede their name.

b. Local use of the sides of hard hats for safety decals is authorized.

c. Alterations that will reduce the dielectric or impact strength will not be made.

d. Requests for variations in color and marking to accommodate occupational specialties should be submitted for consideration to HQUSACE Safety and Health Office.

05.E RESPIRATORY PROTECTION

05.E.01 Whenever respiratory protective equipment, including military protective masks and emergency use self-rescuer devices, is required (see Section 6), employers shall develop and implement a respiratory protection program. The program shall be in accordance with the requirements contained in this section, the OSHA respirator standards, ANSI Z88.2, *NIOSH Respirator Decision Logic* (Department of Health and Human Services NIOSH Publication No. 87-108), and, for work around identified or suspected military chemical agent operations, AR 11-34. The requirements of these documents will be used in:

a. the selection, fit testing, use, maintenance, and storage of respiratory protective equipment,
b. the training of personnel required to use the respiratory protective equipment, and
c. determining if employees are physically and medically determined qualified to wear respiratory protection devices.

05.E.02 Employers shall designate a competent person to develop, implement, and manage the written respiratory protection program. Qualifications of the competent person shall be submitted to the designated authority in the accident prevention plan or activity hazard analysis.

05.E.03 A competent person knowledgeable of inhalation hazards and respiratory protective equipment shall conduct a step-by-step evaluation to insure that only respiratory protection appropriate for the conditions of exposure is selected and utilized. Protection factors described in ANSI Z88.2 or other nationally recognized sources shall be used in the selection process.

05.E.04 The medical status of individuals who are required to wear respirators, to include the use of contact lenses, if applicable, shall be evaluated and a statement shall be provided from a qualified physician indicating that the individual is medically qualified to wear a specified type of respirator.

05.E.05 Respirators shall not be substituted for engineering or environmental control methods without approval of the designated authority.

05.E.06 Approved respiratory protective devices, suitable for their intended use, shall be provided by the employer and used to protect employees against exposure to respiratory hazards.

a. "Approved" means the respirator assembly (the respirator and all of its component parts) has been tested and listed as satisfactory according to standards established by a competent authority (such as NIOSH, MSHA, or host country agency) to provide respiratory protection against a particular hazard for which it was designed. For protection against chemical agent, the Departments of Defense and Army are the approval authorities (approval authority may be specified by law).

b. The respirator assembly approval number, criteria for use, and limitations will appear on the respirator assembly and/or its container.

05.E.07 When respirators are to be used, written standard operating procedures (SOPs) shall be developed and implemented. Respirator SOPs shall address specific requirements of ANSI Z88.2, including the following:

a. selection of respirators based on hazard exposure;
b. fit testing;
c. user instruction in the proper use of respirators and their limitations;
d. issuance of respirators;
e. cleaning, disinfection, and storage of respirators;
f. inspection of respirators;
g. monitoring respiratory hazards and respirator use; and

h. planning for routine, nonroutine, emergency, and rescue uses of respirators.

05.E.08 A respirator equipped with a face piece shall not be worn if facial hair comes between the sealing surface of the face piece and the face, or if facial hair interferes with valve function.

05.E.09 The use (including conditions and medical clearance) or prohibition of wearing contact lenses with selected respirator types shall be determined.

05.E.10 If a spectacle, goggle, face shield, or welding helmet must be worn with a face piece, it shall be worn so as not to adversely affect the seal of the face piece to the face.

05.E.11 Respiratory devices using compressed gaseous air, compressed gaseous oxygen, liquid air, or liquid oxygen are prohibited unless approved before use by a qualified person.

a. Compressed gaseous and liquid oxygen shall meet the requirements of the U.S. Pharmacopoeia for medical or breathing oxygen.

b. Compressed or liquid air shall meet the requirements of the specification for Grade D breathing air (or better) as described in ANSI/CGA G-7.1, *American National Standard Commodity Specification for Air*.

c. Compressed gaseous oxygen shall not be used in atmosphere-supplying respirators or in open-circuit self-contained breathing apparatuses that have previously used compressed air.

d. Oxygen must never be used with supplied air respirators.

05.E.12 Breathing air may be supplied to respirators from cylinders or air compressors.

05.E.13 Before initial use, the quality of the breathing air supplied

from cylinders or compressors shall be tested for harmful contaminants in accordance with ANSI/CGA G-7.1. A copy of the certificate of analysis from a qualified source showing the breathing air meets the minimum acceptable criteria shall be provided to the designated authority. The frequency of such testing shall be in accordance with ANSI/CGA G-7.1 as a minimum and more frequently when deemed necessary by the user and/or the designated authority.

05.E.14 Breathing air containers shall be marked in accordance with ANSI Z48.1, Federal Specification BB-A-1034a, or interim Federal Specification GG-B-675d.

05.E.15 Cylinders shall be tested and maintained in accordance with applicable DOT specifications for shipping containers (49 CFR Parts 173 and 178).

05.E.16 Compressors.

a. A compressor used to supply breathing air shall be constructed and situated to avoid entry of contaminated air into the air supply system.

b. Breathing air-type compressors shall be designed specifically for their intended use and shall be equipped with an approved regulator, suitable in-line air purifying sorbent beds and filters inserted into the supply line to assure breathing air quality.

c. Oil-lubricated compressors shall be equipped with high-temperature, equipment failure, and carbon monoxide continuous monitoring alarm systems. All alarm systems shall be so designed that affected employees will be made aware of the hazardous conditions. All systems shall be calibrated daily. A record of the results of the testing shall be maintained. (Alarms shall be of a type specifically designed for use in line with oil-lubricated compressors.)

d. Oil-lubricated compressors will be equipped with required operational safety devices and reservoirs (or equivalent devices) with sufficient capacity to enable the respirator wearer to escape

from a contaminated atmosphere in case of equipment failure.

e. When used with an air line continuous-flow type respirator, the compressor shall provide, for each user supplied from the compressor, at least 115 L (4 ft^3) of air per minute for tight-fitting Face pieces and at least 170 L (6 ft^3) of air per minute for loose-fitting types such as helmets, hoods, and suits.

05.E.17 Breathing air couplings shall be incompatible with outlets for non-respirable air or other gas systems to prevent inadvertent servicing of air line respirators with non-respirable gases or oxygen.

05.E.18 Canister and cartridge type air-purifying respirators may be used only under the following circumstances:

a. the identity and concentration of the contaminant are known and have adequate sustained warning properties,
b. the oxygen content of air is at least 19.5%,
c. periodic air monitoring of the work area is conducted,
d. the respirator assembly is approved for protection against the specific contaminants and concentration levels to be encountered, and
e. the model of respirator to be used has been successfully fit tested on the wearer.

05.E.19 Atmosphere-supplying respirators.

a. Supplied-air respirators or self-contained breathing apparatus shall be worn when concentrations of contaminants in the atmosphere are unknown or exceed limitations specified (by the manufacturer) for air-purifying respirators.

b. Air line respirators shall be worn, as a minimum, in areas where the atmosphere is determined not to be immediately dangerous to life or health (IDLH) but where either of the following conditions exist:

(1) the contaminant is unknown or the requirement for using an air-purifying respirator cannot be met; or,

(2) abrasive blasting or spraying with or on harmful substances when the concentrations of those substances exceed the concentrations that can be safely handled by an air-purifying respirator.

c. If air line respirators are used, the supplied air source shall not be capable of being expended and the hose length shall not exceed 90 m (300 ft) from source to user.

05.E.20 When planned for use in rescue operations, self-contained breathing apparatus shall be approved as described in 05.E.11.

05.E.21 IDLH atmospheres.

a. Employees entering or working in atmospheres that are IDLH shall wear either a self-contained breathing apparatus of the pressure-demand type open-circuit or positive-pressure type closed-circuit, or a combination pressure-demand type air line respirator with an integral auxiliary self-contained air supply of at least 15 minutes.

b. Employees shall be instructed and trained in the use of self-contained breathing apparatus before exposure to IDLH atmospheres.

c. No employee shall enter an IDLH atmosphere unless accompanied by another adequately protected employee or wearing a safety line and safety harness tended by a person in a safe area. The tender shall have no other duties and shall have the proper equipment available to assist the respirator wearer(s) in case of emergency. An effective communication system that will provide rapid notification of emergency response needs shall be maintained.

05.E.22 Oxygen-deficient atmospheres. No person shall be permitted in atmospheres containing less than 19.5% oxygen without wearing a self-contained breathing apparatus of an approved type or a combination pressure-demand type air line

respirator with an integral axillary self-contained air supply of at least 15 minutes.

05.E.23 Use of respirators in permit required confined spaces.

a. All permit required confined spaces shall be considered immediately dangerous to life or health (IDLH) until proven otherwise by testing. ***> See also Section 6***

b. The concentration of air contaminants and oxygen in the permit required confined space shall be monitored while personnel are inside the space.

c. When sufficient ventilation cannot be obtained without blocking access, persons in a permit required confined space shall be protected by air line respirators or self-contained breathing apparatus.

d. An air-purifying respirator may be worn by a person in a permit required confined space only if tests show that the atmosphere is not oxygen deficient and that the concentrations of air contaminants present are not IDLH and do not exceed the limitations of the respirator.

e. An air line type or hose-mask type supplied air-respirator may be worn by a person in a permit required confined space only if tests show that the atmosphere is not oxygen deficient and only if tests show that concentrations of air contaminants are not IDLH.

f. When the results of monitoring the atmosphere in a permit required confined space, before entry of a person into the space, show that the atmosphere is IDLH, the entrant shall wear either a positive-pressure self-contained breathing apparatus or a combination continuous-flow air line respirator with an auxiliary self-contained air supply of at least 15-minutes.

g. An oxygen-type open-circuit self-contained breathing apparatus shall not be worn in a permit required confined space when the possibility of a fire or explosion hazard is thereby increased.

05.E.24 The use of respirators in low- and high-temperature environments shall be in accordance with the requirements of ANSI Z88.2.

05.F BODY BELTS, HARNESSES, LANYARDS, AND LIFELINES - SELECTION OF COMPONENTS

05.F.01 Personal fall arrest and positioning device systems.

a. Personal fall arrest systems require the use of body harnesses: body belts are not acceptable as part of personal fall arrest systems.

b. The use of a body belt is permitted in a positioning device system.

05.F.02 Body belts and harnesses.

a. Connectors shall be drop forged, pressed or formed steel, or made of equivalent materials; shall have corrosion resistant finish; and all surfaces and edges shall be smooth to prevent damage to interfacing parts of the system.

b. D-rings, snaphooks, and other connectors shall have a minimum tensile strength of 2,270 kg (5,000 lbs); D-rings and snaphooks shall be proof-tested to a minimum tensile load of 1,600 kg (3,600 lbs) without cracking, breaking, or taking permanent deformation. ***> Proof testing is typically conducted by the manufacturer, and a specification of proof testing supplied with the manufactured good***

c. Body belt/harness systems shall decelerate and bring the employee to a complete stop within 1 m (42 in), excluding lifeline elongation, after free fall distance.

d. Body belt/harness systems, when stopping or preventing a fall, shall not produce an arresting force on an employee of more than 10 times the employee's weight or 800 kg (1,800 lbs), whichever is lower.

e. Body belts shall be at least 4 cm (1-5/8 in) wide.

05.F.03 Lifelines and lanyards.

a. Lanyards and vertical lifelines shall have a minimum tensile strength of 2,270 kg (5,000 lbs).

b. Horizontal lifelines shall be designed, installed, and used, under the supervision of a qualified person, as part of a complete personal fall arrest system, which maintains a factor of safety of at least two.

c. Self-retracting lifelines and lanyards that automatically limit free fall distance to 60 cm (2 ft) or less shall be capable of sustaining a minimum tensile load of 1,360 kg (3,000 lbs) applied to the device with the lifeline or lanyard in the fully extended position. Self-retracting lifelines and lanyards that do not limit free fall distance to 60 cm (2 ft) or less, ripstitch lanyards, and tearing and deforming lanyards shall be capable of sustaining a minimum tensile load of 2,270 kg (5,000 lbs) applied to the device with the lifeline or lanyard in the fully extended position.

d. Ropes and straps (webbing) used in lanyards, lifelines, and strength components of body belts and body harnesses shall be made from synthetic fibers.

05.F.04 Lineman's equipment.

a. All fabric for safety straps shall be capable of withstanding an alternating current dielectric test of not less than 25,000 volts per foot "dry" for 3 minutes, without visible deterioration.

b. All fabric and leather used shall be capable of being tested for leakage current and not exceed 1 milliampere when a potential of 3,000 volts is applied to the electrodes 30 cm (12 in) apart.

c. Direct current testing may be permitted in lieu of alternating current testing.

05.G SAFETY AND DEBRIS NETS - DESIGN AND TESTING

05.G.01 Design of safety nets.

a. The maximum size of each safety net mesh opening shall not exceed 90 cm^2 (36 in^2) square, nor be longer than 15 cm (6 in) on any side, and the opening - measured center-to-center of mesh ropes or webbing - shall not be longer than 15 cm (6 in). All mesh crossings shall be secured to prevent enlargement of the mesh opening.

b. All new nets shall meet accepted performance standards of 17,500 foot-pounds minimum impact resistance as determined and certified by the manufacturer and shall bear a label of proof test.

c. Each safety net (or section) shall have a border rope for webbing with a minimum breaking strength of 2,270 kg (5,000 lbs).

d. Connections between safety net panels shall be as strong as integral net components and spaced not more than 15 cm (6 in) apart.

05.G.02 Testing of safety nets.

a. Safety nets and safety net installations shall be tested in the suspended position immediately after installation and before being used as a fall protection system, whenever relocated, after major repair, and, when left at one location, at not more than six month intervals.

b. The test shall consist of dropping into the net a 180 kg (400 lb) bag of sand, not more than 75 cm +/- 5 cm (30 in +/- 2 in) in diameter, at least 1 m (42 in) above the highest working/-walking surface at which employees are exposed to fall hazards.

c. Defective nets shall not be used.

05.G.03 Design of debris nets.

a. Debris nets shall be constructed of wire or synthetic netting of not more than 25 mm (1 in) mesh.

b. Wire mesh shall be made of not less than 22-gage wire and synthetic mesh of not less than Number 18 twine.

05.H ELECTRICAL PROTECTIVE EQUIPMENT

05.H.01 Persons working on electrical distribution systems shall be provided with the appropriate electrical protective equipment, which shall be inspected, tested, and maintained in safe condition in accordance with the standards referenced in Table 5-4.

05.H.02 Electrical workers' rubber insulating protective equipment shall be visually inspected for damage and defects before use.

TABLE 5-4

STANDARDS FOR ELECTRICAL PROTECTIVE EQUIPMENT

Head protection - ANSI Z89.1, *Protective Headwear for Industrial Workers*
Eye and face protection - ANSI Z87.1, *Practice for Occupational and Educational Eye and Face Protection*
Blankets - ANSI/ASTM F479, *In-service Care of Insulating Blankets*
Line hose and covers - ANSI/ASTM F478, *In-service Care of Insulating Line Hose and Covers*
Sleeves - ANSI/ASTM F496, *In-service Care of Insulating Gloves and Sleeves*
Gloves - ANSI/ASTM F496, *In-service Care of Insulating Gloves and Sleeves*; ANSI/ASTM F696, *Leather Protectors for Rubber Insulating Gloves and Mittens*
Footwear - ANSI Z41, *Protective Footwear*

05.H.03 An air test shall be performed on electrical workers' rubber insulating gloves before use each day.

05.H.04 Protective equipment of material other than rubber shall provide equal or better electrical and mechanical protection.

05.H.05 Only live-line tool poles having a manufacturer's certification to withstand at least the following tests shall be used:

a. 100,000 volts per foot of length for 5 minutes when the tool is made of fiberglass, or
b. 75,000 volts per foot of length for 3 minutes when the tool is made of wood, or
c. other equivalent tests.

05.H.06 Only tools and equipment intended for live-line barehand work shall be used on transmission lines. The tools shall be kept dry and clean and shall be visually inspected before use each day.

05.H.07 See Section 05.F for requirements on lineman's personal fall protection equipment.

05.I PERSONAL FLOATATION DEVICES

05.I.01 Type III, Type V, or better U.S. Coast Guard approved International Orange personal floatation device (PFD) shall be provided to and properly worn by all persons in the following circumstances: ***> See Figure 5-1***

a. on floating pipelines, pontoons, rafts, or stages;
b. on structures extending over or next to water except where guardrails or safety nets are provided for employees;
c. working alone at night where there are drowning hazards, regardless of other safeguards provided;
d. in skiffs, small boats, or launches, unless in an inclosed cabin or cockpit; or
e. wherever there is a drowning hazard.

05.I.02 Before and after each use, the PFD shall be inspected

for defects that would alter its strength or buoyancy: defective devices or devices with less than 6 kg (13 lbs) buoyancy shall be removed from service.

05.I.03 Reflective tape and PFD lights.

a. All PFDs shall be equipped with retroreflective tape as specified in 46 CFR 25.25-15.

b. PFDs provided on vessels used on the Great Lakes, Western Rivers, coastwise, or ocean service shall be equipped with PFD lights in accordance with 46 CFR 25.25-13 (work vests are exempt from the lighting requirement if an approved Type I PFD or immersion suit is available for the employee on board).

c. PFD lights conforming to 46 CFR 161.012 shall be required whenever there is potential need for life rings to be used after dark. On shore installations, at least one life ring, and every third one thereafter, shall have a PFD light attached. PFD lights on life rings are required only in locations where adequate general lighting (e.g., floodlights, light stanchions) is not provided.

d. On Coast Guard certified vessels, PFDs are required to have automatic floating electric water lights as required by 46 CFR 161.010: on all other floating plant, at least one life ring, and every third one thereafter, shall have an automatic floating electric water light attached.

05.I.04 Throwable devices (Type IV PFD). Liferings (rope attachment not required) and ring buoys (rope attachment required) shall conform to the requirements of 46 CFR 160 (U.S. Coast Guard approved) and should have at least 21 m (70 ft) of 1 cm (3/8 in) solid braid polypropylene, or equivalent, attached. Throw bags may be used in addition to life rings or ring buoys. Life rings or ring buoys shall be readily available and shall be provided at the following places:

a. at least one on each safety skiff;
b. at least one on all motor boats up to 12 m (40 ft) in length

and at least two for motor boats 12 m (40 ft) in length or longer;
c. at least two on any other piece or group of floating plant up to 30 m (100 ft) in length and one additional for each increase in length of 30 m (100 ft) or fraction thereof; and
d. at least one at intervals of not more than 60 m (200 ft) on pipelines, walkways, wharves, piers, bulkheads, lock walls, scaffolds, platforms, and similar structures extending over or immediately next to water, unless the fall distance to the water is more than 14 m (45 ft), in which case a life ring shall be used. (The length of line for life rings at these locations shall be evaluated but may not be less than 21 m (70 ft).)

05.I.05 At navigation locks, an analysis of the benefits versus the hazards of using floating safety blocks (blocks that may be quickly pushed into the water to protect individuals who have fallen in the water from being crushed by vessels) shall be made.

a. This analysis shall be documented as an activity hazard analysis.

b. If the use of blocks is found acceptable, consideration shall be given to the size and placement of the blocks, the appropriate means of securing and signing the blocks, etc. When the use of blocks is found unacceptable, alternative safety measures shall be developed.

05.J LIFESAVING AND SAFETY SKIFFS

05.J.01 At least one skiff shall be immediately available at locations where employees work over or immediately next to water.

05.J.02 Personnel trained in launching and operating the skiff shall be readily available during working hours. Lifesaving personnel shall perform a lifesaving drill before the initiation of work at the site and periodically thereafter as specified by the designated authority (but at least monthly or whenever new personnel are involved).

05.J.03 Skiffs shall be kept afloat or ready for instant launching.

FIGURE 5-1

PERSONAL FLOATATION DEVICES

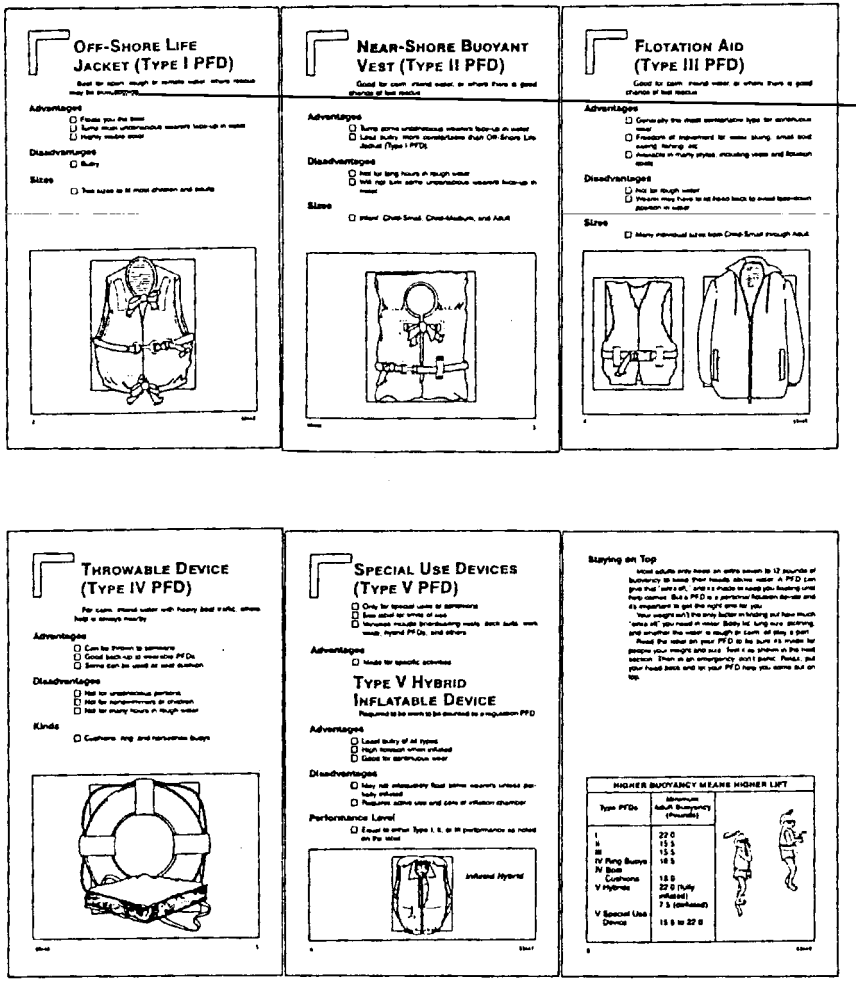

05.J.04 Required equipment must be on board and meet or exceed U.S. Coast Guard requirements and the requirements of Section 19 of this manual. Skiffs shall be equipped as follows:

a. four oars (two if the skiff is motor powered);
b. oarlocks attached to gunwales or the oars;
c. one ball-pointed boat hook;
d. one ring buoy with 21 m (70 ft) of 1 cm (3/8-in) solid braid polypropylene, or equivalent, line attached; and
e. PFD's in number equaling the skiff rating for the maximum number of personnel allowed on board.

05.J.05 In locations where waters are rough, swift, or where manually-operated boats are not practical, a power boat suitable for the waters shall be provided and equipped for lifesaving.

05.J.06 Skiffs and power boats shall have flotation tanks or buoyant material capable of floating the boat and its equipment and the crew.

05.J.07 On vessels (e.g., skiffs) without permanently mounted navigation lights, portable battery-operated navigation lights will be available and used for night operations.

DEFINITIONS

Decelerating device: any mechanism which serves to dissipate energy during a fall.

Decibel (dB): a measure of sound pressure.

dB(A): a weighted measure of sound pressure used with sound level meters; the weighting causes the sensitivity of the sound level meter to vary with the frequency and intensity of sound and in doing so duplicates the response of the human ear.

Demand-type respirator: a respirator equipped with a demand valve which is activated on initiation of inhalation and permits the flow of breathing atmosphere to the face piece; on exhalation, pressure in the facepiece becomes positive and the demand

valve is deactivated.

Facepiece: that portion of a respirator that covers the wearer's nose and mouth in a quarter- or half-mask facepiece, or nose, mouth, and eyes in a full facepiece.

Immediately dangerous to life or health: any atmosphere that poses an immediate hazard to life or produces immediate irreversible debilitating effects on health; any condition that poses an immediate or delayed threat to life or that would cause irreversible adverse health effects.

Impulse noise: noise is considered impulse when the variations in sound-pressure level involve peaks at intervals greater than one second.

Lanyard: a flexible line which is used to secure a safety belt or harness to a lifeline or directly to a point of anchorage.

Lifeline: a line (horizontal or vertical) for direct attachment between a worker's personal fall protection device and a point of anchorage.

Live-line bare-hand technique: a highly specialized technique (usually used on medium and high-voltage transmission lines) where a qualified employee working from an insulated aerial platform is electrically bonded to an energized line, effectively canceling any electrical potential difference across the worker's body and protecting the employee from electric shock.

Live-line tools: tools used by qualified employees to handle energized conductors. The tool insulates the employee from the energized line, allowing the employee to perform the task safely. Also known as "hot sticks."

Negative-pressure respirator: a respirator in which the air pressure (in relation to the air pressure of the outside atmosphere) inside the respiratory-inlet covering is positive during exhalation and negative during inhalation.

Oxygen deficient atmosphere: an atmosphere having an oxygen

concentration of less than 19.5% by volume.

Point of anchorage: a secure point of attachment for lifelines, lanyards, or deceleration devices.

Positive-pressure respirator: a respirator in which the air pressure (in relation to the air pressure of the outside atmosphere) inside the respiratory-inlet covering is positive during both exhalation and inhalation.

Pressure-demand type respirator: a respirator in which the pressure (in relation to the immediate environment) inside the facepiece is positive during both inhalation and exhalation.

Radiant energy: the energy of electromagnetic waves produced by movement of molecules excited by the heat of an electric arc, gas flame, or the passage of electric current. Includes ultraviolet, visible light, and infrared energy.

Respirator: a device designed to protect the wearer from the inhalation of harmful atmospheres.

Safety belt: a strap, with means for securing about the waist and attaching to a lanyard, lifeline, or decelerating device, which is used to limit the fall of a worker.

Safety harness: a design of straps which is secured about the employee in a manner to distribute the arresting forces over at least the thighs, shoulders, and pelvis, with provisions for attachment to a lanyard, lifeline, or decelerating device.

Snaphook: a connector consisting of a hook-shaped member with a normally closed keeper, or similar arrangement, which may be opened to permit the hook to receive an object and, when released, automatically closes to retain the object.

The locking type has a self-closing, self-locking keeper which remains locked until unlocked and pressed open for connection or disconnection.

The non-locking type has a self-closing keeper which remains closed until pressed open for connection or disconnection.

Sound pressure, steady-state: sound that does not significantly change in intensity or frequency with time.

SECTION 6

HAZARDOUS SUBSTANCES, AGENTS AND ENVIRONMENTS

06.A GENERAL

06.A.01 Exposure standards.

a. Exposure, through inhalation, ingestion, skin absorption, or physical contact, to any chemical, biological, or physical agent in excess of the acceptable limits specified in the ACGIH "*Threshold Limit Values and Biological Exposure Indices*" shall be prohibited.

b. In case of conflicts between ACGIH and other standards or regulations referenced in this manual, the more stringent shall prevail.

c. The employer shall comply with all applicable standards and regulations to reduce contaminant concentration levels as low as is reasonably achievable (ALARA).

06.A.02 Hazard evaluation.

a. All operations, materials, and equipment shall be evaluated to determine the presence of hazardous environments or if hazardous or toxic agents could be released into the work environment.

b. Activity and/or position hazard analyses shall be used for the evaluation. The analyses shall identify all substances, agents, and environments that present a hazard and recommend hazard control measures. Engineering and administrative controls shall be used to control hazards; in cases where engineering or administrative controls are not feasible, PPE may be used.

c. The analyses shall identify: that it serves as certification of hazard assessment; the workplace and activity evaluated;

the name of the person certifying that the evaluation has been performed; and the date of the evaluation.

d. Operations, materials, and equipment involving potential exposure to hazardous substances, agents, or environments shall be evaluated by a qualified industrial hygienist, or other competent person, to formulate a hazard control program. This program must be approved by the designated authority before the start of operations.

06.A.03 Testing and monitoring.

a. Approved and calibrated testing devices shall be provided to measure hazardous substances, agents, and environments. (Devices shall be labeled indicating the name of the individual performing the calibration and date of the current calibration.)

b. Individuals performing testing and monitoring shall be trained in testing and monitoring procedures and hazards: testing devices shall be used, inspected, and maintained in accordance with the manufacturer's instructions, a copy of which shall be maintained with the devices.

c. NIOSH sampling and analytical methods, OSHA required, or other approved sampling and analytical methods shall be used; laboratories used for analysis shall be accredited by nationally recognized bodies, such as the American Industrial Hygiene Association, for the type of analysis performed.

d. Determinations of the concentrations of, and hazards from, hazardous substances, agents, and environments shall be made by a qualified industrial hygienist or other competent person during initial startup and as frequently as necessary to ensure the safety and health of the work environment.

e. Records of testing/monitoring shall be maintained on site and shall be available to the designated authority upon request.

06.A.04 The following precedence shall be in the control of exposure to hazardous substances, agents, and environments:

a. engineering controls (such as local/general ventilation) shall be instituted to limit exposure to hazardous substances, agents, and environments within acceptable limits;

b. when engineering controls are not feasible or are not sufficient to limit exposure to hazardous substances, agents, and environments within acceptable limits, work practice controls (such as the wetting of hazardous dusts) shall be instituted;

c. when engineering or work practice controls are not feasible or are not sufficient to limit exposure to hazardous substances, agents, and environments within acceptable limits, PPE programs (such as the use of respirators or gloves) shall be instituted.

06.B HAZARDOUS SUBSTANCES

06.B.01 When any hazardous substance is procured, used, stored, or disposed, MSDS for the substances shall be available at the worksite. ***> See 01.B.04***

a. Information contained in the MSDS shall be incorporated in the hazard analyses for the activities in which the material will be used and will be followed in the use, storage, and disposal of the material and the selection of hazard control and emergency response measures.

b. All employees using, storing, or disposing of hazardous substances shall receive training in the information contained in the MSDS for the substance and any general safety and health instruction required to understand this information.

06.B.02 When engineering and work practice controls are either infeasible or insufficient, appropriate PPE and sanitary facilities shall be provided and used for the transportion, use, and storage of hazardous substances.

a. When irritants of hazardous substances may contact skin or clothing, sanitary facilities and protective equipment shall be provided. ***> See also paragraphs 02.C.01 and Section 5***

b. When the eyes or body of any person may be exposed to harmful substances, suitable facilities for quick drenching or

flushing of the eyes and body shall be provided within the work area for immediate emergency use. ***> Reference ANSI Z358.1***

06.B.03 Transportation, use, storage, and disposal of hazardous substances shall be under the supervision of a qualified person.

a. Transportation, use, and storage of hazardous substances shall be planned and controlled to prevent contamination of people, animals, food, water, equipment, materials, and environment.

b. All storage of hazardous substances shall be in accordance with the recommendations of the manufacturer and accessible only to authorized persons.

c. Disposal of surplus or excess materials and containers shall occur in a manner that will not contaminate or pollute any water supply, ground water, or streams, and will comply with federal, state, and local regulations and guidelines.

d. Containers that have been used for hazardous substances shall not be used for any other material until they have been cleaned in accordance with the hazardous substance manufacturer's recommendations.

e. Every hazardous substance being transported for disposal shall be transported with a copy of the substance's MSDS.

06.B.04 Process safety management of highly hazardous chemicals shall be employed IAW 29 CFR 1910.119 or 29 CFR 1926.64 whenever a work activity involves:

a. A process that involves a chemical at or above the threshold quantities listed in Appendix A of the above-cited CFRs, or
b. A process that involves a flammable liquid or gas as defined in 29 CFR 1926.59(c) on site in one location in a quantity of 10,000 pounds or more except (1) hydrocarbon fuels used solely for workplace consumption as a fuel if such fuels are not part of a process containing another highly hazardous chemical

covered by the standards cited above, or (2) flammable liquids stored in atmospheric tanks or transferred which are kept below their normal boiling point without benefit of chilling or refrigeration.

06.B.05 Asbestos and lead abatement activities.

a. Before initiation of activities where there is an identified asbestos or lead hazard, a written plan detailing compliance with Occupational Safety and Health Administration (OSHA) and Environmental Protection Agency (EPA) asbestos or lead abatement requirements shall be developed and implemented. This plan shall be submitted to and accepted by the Government's designated authority before initiation of work activities. (For contract activities, the compliance plan may be incorporated into the project's accident prevention plan.)

b. The contractor shall dispose asbestos- and lead-containing materiel in accordance with all Federal, State, and local regulations.

06.C HOT SUBSTANCES

06.C.01 Heating devices and melting kettles.

a. Heating devices and melting kettles shall be placed on firm, level foundations and protected against traffic, accidental tipping, or similar hazards.

b. A fire extinguisher, rated not less than 2-A:20-B:C, shall be available at all locations where heating devices and melting kettles are in use. ***> Hot work permits shall be required on government installations unless otherwise indicated by the Government's Designated Representative***

c. Heating devices and melting kettles shall not be left unattended when in use. ***> See paragraph 09.J.03***

d. Bituminous-material melting kettles shall be provided with an effective lid or hood and a thermometer in operating condition.

e. Bituminous-material melting kettles shall not be used or operated inside, atop, or within 8 m (25 ft) of buildings or combustible material.

06.C.02 Enclosed areas in which hot substances are heated or applied shall be ventilated.

06.C.03 Ladles, equipment, and material shall be moisture-free before being used or placed in heated material.

06.C.04 Transporting and handling hot substances.

a. Runways or passageways, clear of obstructions, shall be provided for all persons carrying hot substances.

b. Hot substances shall not be carried up or down ladders.

c. When hoists are used to raise or lower hot substances, attention shall be given to assuring that the hoisting mechanism is adequate for the loads imposed and is securely braced and anchored.

d. All persons handling hot substances shall be provided protection against contact with, or exposure to radiant heat, glare, fumes, and vapors of the substances. ***> See Section 5***

e. Containers for handling and transporting hot substances shall be of substantial construction, free from any soldered joints or attachments, and shall not be filled higher than 10 cm (4 in) from the top.

06.D HARMFUL PLANTS, ANIMALS, AND INSECTS

06.D.01 Protection against hazards from animals and insects shall include, as applicable, the following:

a. personal protection such as boots, hoods, netting, gloves, and masks;
b. repellents;
c. drainage or spraying of breeding areas;

d. burning or destruction of nests;
e. smudge pots and aerosols for protecting small areas;
f. elimination of conditions that propagate insects or vermin;
g. extermination measures;
h. inoculation;
i. approved first aid remedies for employees; and
j. instruction in recognition of the animals and insects.

06.D.02 In areas where employees are exposed to poisonous plants (e.g., poison ivy, oak, or sumac), the following protective measures, as applicable, shall be provided:

a. removal or destruction of plants, where practical;
b. appropriate protective clothing such as gloves;
c. protective ointments;
d. soap and water for washing exposed parts;
e. approved first aid remedies; and
f. instruction in recognition and identification of the plants.

06.D.03 When burning poisonous plants, controls shall be instituted to prevent contact with or inhalation of toxic elements contained in the smoke.

06.E IONIZING RADIATION

06.E.01 Anyone who procures, uses, possesses, transports, transfers or disposes of regulated radioactive materials or radiation generating devices shall:

a. Notify, in writing, the Designated Authority of the nature of the material or device, a description of the intended use, the location of use and storage, and all transportation and disposal requirements.

b. Secure appropriate authorization or permit if a licensed or DOD regulated radiological device or radioactive material is to be used on a DOD installation (a lead time of at least 45 days should be allowed for obtaining a DOD authorization or permit).

c. Provide to the Designated Authority a copy of all Nuclear

Regulatory Commission (NRC) or Agreement State licenses, Department of the Army Radiation Authorization (DARA), and reciprocity forms (to include NRC Form 241), as applicable.

06.E.02 Qualified Personnel.

a. Operations involving radiation hazards or use of radioactive material or radiation generating devices shall be performed under the direct supervision of a person, designated in writing by the Radiation Safety Officer (RSO), who is qualified and responsible for radiological safety. This person shall conduct surveys, evaluate and secure any specialized assistance to assure compliance with radiation protection standards.

b. The RSO will be technically qualified, meeting the experience, training, and education requirements listed below:

(1) formally trained in radiation protection that includes the following topics: physics of radiation; radiation's interaction with matter; mathematics necessary for the subject matter; biological effects of radiation; type and use of instruments for detection, monitoring and surveying radiation; radiation safety techniques and procedures; and use of time, distance, shielding, engineering controls and PPE to reduce radiation exposure.
(2) hands-on training in the uses all of the equipment, instrumentation, procedures and theory used in their unit.
(3) knowledge of regulations (NRC, EPA, Department of Energy (DOE), DOT and DOD to include all applicable Components) pertaining to radioactive materials, radiation generating devices, radioactive and mixed waste; and
(4) knowledge of the USACE Radiation Safety Program, and recordkeeping requirements for work with radioactive materials and radiation generating devices.

06.E.03 Radiation Safety Program.

a. Operations involving regulated radiation hazards, and users of radioactive material or radiation generating devices shall develop and implement a Radiation Safety Program. The program shall be managed by the RSO and based on sound

radiation safety principles that shall keep occupational doses and doses to the public ALARA. A RSO and Ionizing Radiation Safety Committee (IRSC) shall be established in accordance with 10 CFR 20 and DOD regulation as part of the Radiation Program. The program shall be reviewed annually.

b. All personnel entering an area where radioactive material or radiation generating devices are used, and where there is a potential for an individual to receive a Total Effective Dose Equivalent (TEDE) of 100 mrem or more in one year, shall receive instruction in:

(1) the presence of the material or device;
(2) health and safety problems associated with exposure to radiation, including the potential effects of radiation on a pregnant female, the fetus or embryo;
(3) precautions and controls used to control exposure;
(4) proper use of instrumentation and dosimetry in the area;
(5) the Radiation Safety Program required in paragraph 06.E.03; and
(6) their rights and responsibilities.

06.E.04 Dose Limits.

a. Occupational dose limits shall be based on the TEDE. ***> See Table 6-1***

(1) An annual limit which is the more limiting of: 5 rems (0.05 Sieverts (Sv)) TEDE, or the sum of the deep dose equivalent and the committed dose equivalent to any individual organ or tissue of 50 rems (0.5 Sv), or 15 rems (0.15 Sv) to the lens of the eye, or 50 rems (0.5 Sv) shallow dose equivalent to the skin or any extremity.

(2) Without the written approval of the Radiation Safety Officer (RSO) the annual occupational dose shall not exceed the more limiting of: 0.5 rems (0.005 Sv) TEDE, or the sum of the deep dose equivalent and the committed dose equivalent to any

TABLE 6-1

Part	Annual limits (NRC) per RSO	Annual limits (NRC) w/o RSO	Suggested ALARA limits
Whole body	5 rem	0.5 rem	0.1 rem
Individual organ	50 rem	5 rem	0.5 rem
Lens of eye	15 rem	1.5 rem	0.15 rem
Skin	50 rem	5 rem	0.5 rem

individual organ or tissue of 5 rems (0.05 Sv), or 1.5 rems (0.015 Sv) to the lens of the eye, or 5 rems (0.05 Sv) shallow dose equivalent to the skin, or any extremity.

(3) To keep doses ALARA, the user shall set administrative action levels below the annual dose limits. These action levels shall be realistic and attainable. Suggested action levels are the more limiting of: 0.1 rems (0.001 Sv) TEDE, or the sum of the deep dose equivalent and the committed dose equivalent to any individual organ or tissue of 0.5 rems (0.005 Sv), or 0.15 rems (0.0015 Sv) to the lens of the eye, or 0.5 rems (0.005 Sv) shallow dose equivalent to the skin or any extremity.

b. Planned special exposures shall not be used without the written consent of the RSO and the IRSC.

c. No employee under 18 years of age shall receive occupational exposure to ionizing radiation.

d. The dose to an embryo/fetus shall not exceed 0.5 rem (0.005 Sv) during the entire gestation period.

06.E.05 Radiation Monitoring, Surveys and Dosimetry.

a. Users of radioactive material or radiation generating devices shall conduct surveys and monitoring to ensure occupational dose limits are not exceeded.

b. Instruments used for radiation monitoring and surveying shall be:

(1) available and used whenever radioactive material or radiation generating devices are used;
(2) properly calibrated to a National Institute of Standards and Technology (NIST) traceable source;
(3) appropriate for the type and intensity of the radiation surveyed; and
(4) operationally checked against a dedicated check source before each use.

c. Users of radioactive material or radiation generating devices and visitors or personnel performing work tasks in the area shall coordinate with the RSO for appropriate dosimetry use whenever any of the following situations exist:

(1) an individual enters a Radiation Area (>5 mrem (50 € Sv) in any one hour), or a High Radiation Area (>100 mrem (1 mSv) in any one hour), or a Very High Radiation Area (>500 rad (5 Gy) in one hour),
(2) an individual has the potential to receive greater than 0.5 rem (0.005 Sv) in one year.

d. All external dosimetry shall be processed by a National Voluntary Laboratory Accreditation Program (NVLAP) certified laboratory. USACE personnel shall use the designated Department of Army dosimetry center.

e. Users of unsealed radioactive material sources shall institute an internal dosimetry program:

(1) when there is a potential for a worker to receive an internal dose of greater than 0.5 rem (5 mSv) per year;
(2) which is reviewed and approved by a qualified health physicist, and
(3) which contains provisions for a pre-exposure bioassay, a bioassay method capable of detecting internal radioactive materials, at a level below 10% of the Annual Limit of Intake listed in Appendix B of 10 CFR 20 for each radionuclide used,

appropriate action levels for requiring additional bioassay, actions for individuals found to have internally deposited radioactive materials, and provisions for post-exposure bioassay.

06.E.06 Access, Storage and Control.

a. All radiological devices and radioactive materials shall be designed, constructed, installed, utilized, stored, transported and disposed of in such a manner to assure personnel exposures are kept ALARA.

b. Users of radioactive materials or radiation generating devices shall post signs and control access to radiation areas in accordance with 06.E.08.

c. Where radiation levels exceed 2 mrem (20 € Sv) in any one hour, users shall use engineering controls, shielding, access time limitation, and/or physical separation to keep doses to the public ALARA.

d. Users shall secure radioactive material and radiation generating devices against theft or unauthorized use.

e. Storage shall be in accordance with any license or permit requirements.

f. Radioactive material and radiation generating devices, not in storage, shall be under constant control and surveillance.

g. Operations involving regulated radiation hazards or users of regulated radioactive material or radiation generating devices shall conduct surveys to ensure that the public dose limit of 0.01 rem (0.0001 Sv) is not exceeded.

06.E.07 Respiratory Protection and other Controls.

a. Users of radioactive material shall, to the extent practicable, institute process or engineering controls to limit concentrations of radioactive materials in air.

b. Where process or engineering controls are unable to control airborne radioactive material concentrations, users shall increase monitoring and limit intakes of radioactive materials through control of access, limitation of exposure times, use of respiratory protection equipment, or other controls.

c. The use of respiratory protection equipment shall be in compliance with paragraph 05.E. of this manual, and shall be limited by the protection factors listed in Appendix A of 10 CFR 20.

06.E.08 Signs, Labels, and Posting Requirements.

a. The RSO shall post in a conspicuous location a sign or signs bearing the standard radiation symbol shown in Figure 8.5 and the following words:

(1) "Caution, Radiation Area" - areas where radiation field is equal to or greater than 5 mrem (0.05 mSv) in any one hour and less than 100 mrem (1 mSv) in any one hour;
(2) "Caution, High Radiation Area" - areas where radiation field is equal to or greater than 100 mrem in any one hour (0.1 mSv) and less than 500 rads (5 Gy) in any one hour;
(3) "Grave Danger, Very High Radiation Area" - areas where the radiation field is equal to or greater than 500 rads (5 Gy) in any one hour;
(4) "Caution, Airborne Radioactivity Area" - areas where airborne radioactive material concentrations are greater than the derived air concentration (DAC) limits listed in 10 CFR 20 Appendix B. or
(5) “Caution, Radioactive Material” - rooms where quantities of radioactive materials in excess of ten times the 10 CFR 20 Appendix C quantities are used or stored.

b. Users who receive or expect to receive a package containing radioactive material shall follow the package receipt procedures listed in 10 CFR 20.1906 "Procedures for Receiving and Opening Packages.”

c. The RSO shall post an NRC Form 3 "Notice to Employees"

in a location visible to all employees who work with or around radioactive materials.

06.E.09 Radioactive Waste Disposal.

a. Radioactive sealed sources (and gauges) when no longer needed may be returned (transferred) to the manufacturer. The local USACE Command RSO must be notified and any applicable licenses or permits amended or terminated.

b. Radioactive waste shall not be disposed of except through coordination with the designated authority (the USACE Hazardous, Toxic and Radioactive Waste Center of Expertise).

c. Tritium (H-3) and Carbon-14 used in liquid scintillation counting, at concentrations below 0.05 € Ci/g may be disposed without regard to its radioactivity. (Note many liquid scintillation fluids are hazardous wastes and must be disposed of as such.)

06.E.10 Records.

a. All users of radioactive material or radiation generating devices shall prepare and maintain records of the Radiation Safety Program for three years after termination of the license or permit.

b. For any individual who frequents a restricted or controlled area, and may potentially be exposed to 100 mrem (1 mSv) per year or more, the licensee shall prepare and maintain records to determine that person's:

(1) occupational dose during the current year,
(2) attempt to obtain records of cumulative occupational radiation exposure, and
(3) dose received, both internal and external.

c. All users of radioactive material or radiation generating devices shall prepare and maintain records of all calculated or monitored radiation dose to individual members of the public so

as to document compliance with paragraph 06.E.05.

06.E.11 Reports.

a. Any loss, theft, damage or overexposure shall immediately upon discovery be reported to the RSO who will then file a report with NRC in accordance with the requirements of 10 CFR 20.

b. Annual reports shall be issued by the RSO for each individual USACE radiation worker with the recorded or calculated dose assigned to the USACE individual for the year or specific work project. These shall be maintained in such a manner that accumulated exposure can be determined at a future date.

06.E.12 Transportation, interstate or intrastate, shall comply with the requirements of the DOT for transportation of radioactive materials contained in 49 CFR.

06.E.13 Medical surveillance.

a. Medical examinations are not routinely required before occupational exposure to ionizing radiation. For USACE personnel a medical examination shall be conducted in accordance with AR 40-5, when deemed necessary by a physician or referred by the RSO.

b. All cases of overexposure and suspected ingestion or inhalation of radioactive materials shall be referred to a physician for examination.

06.F NONIONIZING RADIATION AND MAGNETIC AND ELECTRIC FIELDS

06.F.01 Lasers:

a. Only qualified and trained employees may be assigned to install, adjust, and operate laser equipment; proof of qualification of the laser equipment operator shall be in the operator's possession during operation.

b. Laser equipment shall bear a label to indicate make, maximum output, and beam spread.

c. Areas in which lasers are used shall be posted with standard laser warning signs. ***> See paragraph 08.A.04e***

d. Employees whose work requires exposure to laser beams shall be provided with appropriate laser safety goggles that will protect for the specific wavelength of the laser and be of optical density adequate for the energy involved.

Intensity, continuous wave maximum power density (watts/cm^2)	Attenuation	
	Optical density	Attenuation factor
0.01	5	10,000
0.1	6	100,000
1.0	7	1,000,000
10.0	8	10,000,000

Protective goggles shall bear a label identifying the following data: the laser wavelengths for which use is intended; the optical density of those wavelengths; and the visible light transmission.

e. Beam shutters or caps shall be used, or the laser turned off, when laser transmission is not required. When the laser is left unattended for a period of time (e.g., during lunch hour, overnight, or at change of shifts) the laser shall be turned off.

f. Only mechanical or electronic means shall be used as a detector for guiding the internal alignment of the laser.

g. The laser beam shall not be directed at employees: whenever possible, laser units in operation shall be set above the heads of employees.

h. When it is raining or snowing or when there is dust or fog in the air, the operation of laser systems shall be prohibited (as

practical); during such weather conditions employees shall be kept out of range of the areas of source and target.

I. Employee exposure to laser power densities shall be within the threshold limit values (TLVs) as specified by the ACGIH in "Threshold Limit Values and Biological Exposure Indices."

j. Lasers used as pointing devices (e.g., during briefings) shall not be directed toward employees and shall be handled and stored in accordance with the manufacturer's recommendations.

06.F.02 Airborne upper sonic and ultrasonic acoustic, light, and near-infrared, radio frequency, sub-radio frequency (30kHz and below) magnetic and/or electric field, microwave, and ultraviolet radiation.

a. Employees shall not be exposed to airborne upper sonic or ultrasonic sound, sub-radio frequency (30 kHz and below), radio frequency (30 kHz to 300 Ghz), infrared, ultraviolet or microwave electromagnetic radiation and/or electric or magnetic fields in excess of the values and indices as specified in the ACGIH "Threshold Limit Values and Biological Exposure Indices." (Although it is believed that employees may be exposed repeatedly up to these TLVs without adverse health effects, USACE and USACE contractors shall take all necessary measures to maintain exposures as low as reasonably achievable and prevent needless exposure to higher levels of radio frequency radiation when simple measures will prevent exposure.)

b. Employers shall use qualified competent persons and appropriate calibrated monitoring equipment to assess, survey, and evaluate non-ionizing radiations, employee exposures, and control measures.

c. For workers wearing cardiac pacemakers, the TLVs may not protect against electromagnetic interference with pacemaker function. It is recommended that, lacking specific information on electromagnetic interference from manufacturers, the exposure of persons wearing cardiac pacemakers or similar medical electronic devices be maintained as specified in the ACGIH's "Threshold Limit Values and Biological Exposure Indices."

06.G VENTILATION AND EXHAUST SYSTEMS

06.G.01 Design.

a. Ventilation systems shall be designed to prevent dispersion into the air, or drawing through the work area, of dusts, fumes, mists, vapors, and gases in concentrations causing harmful exposure

b. The design of proposed engineering controls shall be approved by the designated authority before acquisition or installation of the equipment; design data and drawings shall accompany the request for approval.

c. Airborne contaminants created by portable equipment (such as drills, saws, and grinding machines) in concentrations exceeding acceptable safe limits shall be effectively controlled at the source. ***> See 06.A.04***

06.G.02 Ventilation systems shall be designed, installed, operated, and maintained in such a manner to ensure the maintenance of a volume and velocity of exhaust air sufficient to gather contaminants and safely transport them to suitable points for removal.

06.G.03 Duration of operation.

a. Ventilation systems shall be operated continuously during operations when persons are exposed to airborne contaminants

or explosive gases at or above acceptable safe limits as defined in 06.A.01 or as otherwise specified by this manual, referenced standards, or regulations.

b. Ventilation systems shall remain in operation for a time after the work process or equipment has ceased to ensure the removal of any contaminants in suspension in or vaporizing into the air.

06.G.04 The efficiency of engineering control systems and methods shall be periodically verified as specified by the designated authority.

06.G.05 Dusts and refuse materials removed by exhaust systems or other methods shall be disposed of in a manner that will not create a hazard to employees or the public and in accordance with federal, state, and local requirements.

06.H ABRASIVE BLASTING

06.H.01 Written operating procedures shall be developed and implemented for abrasive blasting operations, including pressurized pot procedures (filling, pressurizing, depressurizing, and maintenance and inspection).

a. The written operating procedures will be developed, maintained, and provided as stated in paragraph 3.g of Appendix C.

b. No employee will be allowed to work in abrasive blasting operations unless he/she has met the medical surveillance and training and experience, and has been provided the personal protective equipment, specified in Appendix C.

c. Pressurized systems and components shall be inspected, tested, certified, and maintained in accordance with the requirements of Section 20.

06.H.02 Abrasive blasting operations shall be evaluated to determine composition and toxicity of the abrasive and the dust or fume generated by the blasted material, including surface coatings. This determination shall be documented on the activity hazard analysis(ses) developed for the abrasive blasting activity.

06.H.03 The concentration of respirable dust and fume in the breathing zone or persons exposed to the blasting operation shall be maintained in accordance with paragraph 06.A.01.

06.H.04 When silica sand or other substances containing more than 1% crystalline silica are used for abrasive blasting, the silica control program stated in Appendix C shall be implemented.

06.H.05 Blast cleaning enclosures shall be exhaust ventilated in such a way that a continuous inward flow of air will be maintained at all openings in the enclosure during the blasting operation.

a. All air inlets and access openings shall be baffled or so arranged that by the combination of inward air flow and baffling the escape of abrasive or dust particles into an adjacent work area will be minimized and visible spurts of dust will not be observed.

b. The rate of exhaust shall be sufficient to provide prompt clearance of the dust-laden air within the enclosure after cessation of the blasting.

06.I CONFINED SPACE

06.I.01 At each facility or activity, the Designated Authority shall evaluate, or designate a competent person to evaluate, the potential for permit-required confined spaces (PRCSs).

a. The evaluation shall use the procedures and decision logic presented in Figure 6-1.

b. A list of confined spaces (permit-required and non-permit required) shall be maintained on site and shall be updated as new confined spaces are discovered.

c. All PRCSs shall be identified with a sign reading "**DANGER - PERMIT-REQUIRED CONFINED SPACE - DO NOT ENTER**" to inform personnel of the existence and location of, and the danger posed by, the PRCS.

d. Facilities shall be reevaluated at least once annually for the presence of confined spaces. In addition, confined spaces shall be reevaluated whenever they or their characteristics change in a way that could lead to reclassification as a PRCS.

06.I.02 Responsibilities.

a. Authorized entrants shall:

(1) communicate with the attendant as necessary so the attendant can monitor entrant status and alert entrants of any need to evacuate the PRCS, and
(2) evacuate the PRCS and alert the attendant whenever they recognize any warning sign or symptom of exposure to a dangerous situation or they detect a prohibited condition or whenever the attendant or entry supervisor orders evacuation or an evacuation alarm is activated.

b. Attendants shall:

(1) remain outside the PRCS during entry operations until relieved by another attendant,
(2) take action (warn that they must stay away from the PRCS or that they must immediately exit if they have entered the PRCS; inform authorized persons and the entry supervisor if unauthorized persons have entered the PRCS) when unauthorized persons approach or enter a PRCS while entry is underway,
(3) continuously maintain an accurate count of authorized entrants in the PRCS and ensure that the means used to identify authorized entrants accurately identify the entrants,

(4) communicate with authorized entrants as necessary to monitor entrant status and to alert entrants of the need to evacuate the PRCS,

(5) monitor activities inside and outside the PRCS to determine if it is safe for entrants to remain in the PRCS

(6) immediately order evacuation of the PRCS if they detect a prohibited condition, the behavioral effects of hazard exposure in an authorized entrant, or a situation outside the PRCS that could endanger the authorized entrants, or if the attendant cannot effectively and safely perform any of his or her duties and responsibilities,

(7) perform non-entry rescues as specified by the confined space entry permit; summon rescue and other emergency services as soon as it is determined that authorized entrants may need assistance to escape from PRCS hazards, and

(8) not, under any circumstance, monitor more than one occupied PRCS at any given time; not perform any duty that might interfere with their primary duty to monitor and protect the authorized entrants.

c. Entry supervisors shall:

(1) verify that all tests specified by the permit have been conducted and that all procedures and equipment specified by the permit are in place before endorsing the permit and allowing entry to begin,

(2) terminate the entry and cancel the permit when the entry operations covered by the entry permit have been completed or whenever a condition that is not allowed under the entry permit arises in or near the PRCS,

(3) verify that rescue services are available and that the means for summoning them are operable,

(4) remove unauthorized individuals who enter or who attempt to enter the PRCS during entry operations,

(5) determine (at intervals dictated by the hazards and operations performed within the PRCS and whenever responsibility for a PRCS entry operation is transferred) that entry operations are consistent with terms of the entry permit and that acceptable entry conditions are maintained.

FIGURE 6-1

PERMIT-REQUIRED CONFINED SPACE EVALUATION PROCEDURES AND DECISION LOGIC

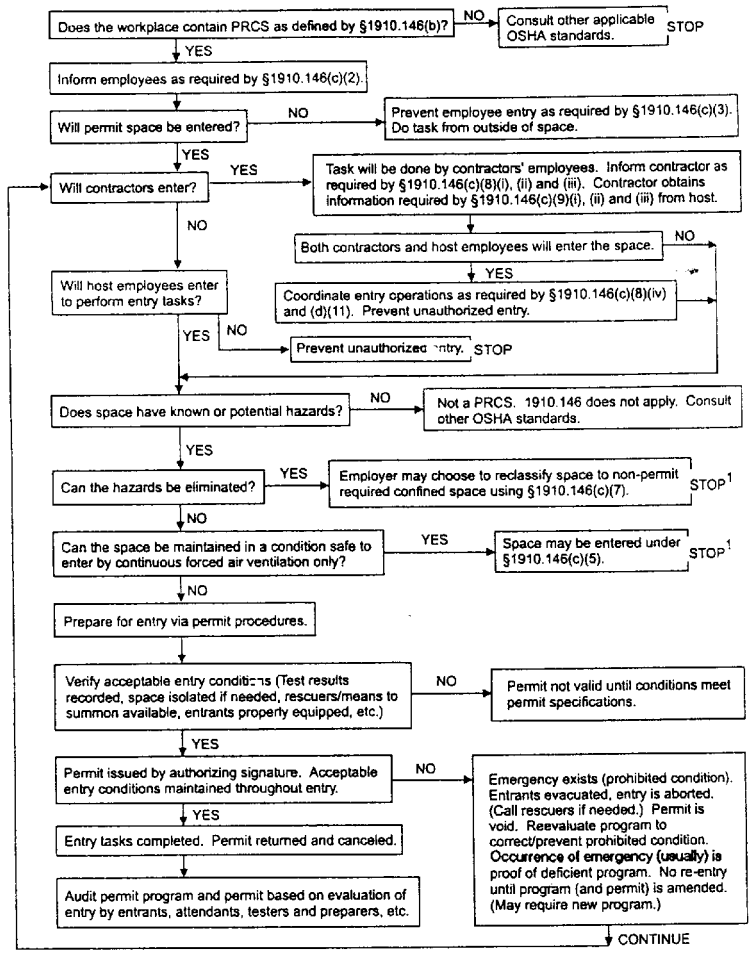

[1] Spaces may have to be evacuated and re-evaluated if hazards arise during entry.

FIGURE 6-1, continued

Test conditions in the permit space to determine if acceptable entry conditions exist before entry is authorized to begin. If isolation of the space is infeasible because the space is large or is part of a continuous system (e.g., sewer system), pre-entry testing shall be performed to the extent feasible before entry is authorized. If entry is authorized, entry conditions shall be continuously monitored in the areas where authorized entrants are working. Test or monitor the permit space as necessary to determine if acceptable entry conditions are maintained during entry operations. The space will be tested first for oxygen, then for combustible gases and vapors, and then for toxic gases and vapors.

---

d. Contractors who perform work in, or who may be required to enter, a PRCS on a USACE-controlled facility shall:

(1) request and obtain (from USACE) information on the location and hazards of PRCS that his or her employees will be entering or working near, before start of work;
(2) request and obtain any pertinent information on USACE or previous contractor experience with PRCS that his/her employees will be entering or working near, before start of work;
(3) be apprised of any precautions or procedures that the USACE installation has implemented for the protection of employees in or near PRCSs;
(4) submit a copy of their written permit required confined space program, which meets the requirements of this section and 29 CFR 1910.146 without respect to 1910.146(a), which will be followed;
(5) coordinate permit-required confined space entry operations with USACE; and
(6) debrief USACE personnel at the conclusion of entry operations on any matters concerning the entry program or any hazards created or confronted in the PRCS during entry operations.

06.I.03 All employees with potential entry into a PRCS shall be

notified of the existence, location, and hazards of the space. All authorized entrants, attendants, and entry supervisors shall know the hazards that may be faced during entry, including information on the mode, signs or symptoms, behavioral effects, and consequences of the exposure.

06.I.04 Written permit-required confined space (PRCS) program.

a. Each activity, USACE and contractor, and each USACE facility shall maintain a PRCS program and, if it has been determined that the activity or facility has confined spaces, PRCS entry procedures.

b. PRCS programs shall cover the elements in Table 6-1.

c. The activity or facility, as part of its PRCS program, will provide, maintain, and assure the proper use of:

(1) testing and monitoring equipment,
(2) ventilating equipment needed to obtain acceptable entry conditions,
(3) communications equipment,
(4) PPE used where engineering controls and work practices do not adequately protect USACE personnel,
(5) lighting equipment,
(6) equipment, such as ladders, needed for safe ingress and egress by authorized entrants,
(7) rescue and emergency equipment, and
(8) any other equipment necessary for safe entry into and rescue from permit spaces.

06.I.05 Permit-required confined space entry procedures.

a. The designated authority shall develop and implement a system for the preparation, issuance, use, and cancellation of PRCS entry permits (ENG Form 5044-R).

(1) Before entry begins, the entry supervisor identified on the permit shall sign the permit to authorize entry.

TABLE 6-1

PRCS PROGRAM ELEMENTS

Hazard identification: identification of the PRCS hazards.
Hazard control: procedures, practices, and controls developed and implemented to eliminate or control PRCS hazards.
Permit system: written system for preparing, issuing, implementing, and canceling entry permits, including provisions for closing permit-required spaces and returning them to service after work is completed.
Specialized equipment: specialized equipment (e.g., monitoring instruments, ventilation equipment, PPE, communication equipment, rescue equipment) that shall be provided and used.
Personnel: designation and responsibilities of employees who have a role in the PRCS entry.
Testing and monitoring: provisions for testing and monitoring the PRCS to determine if it is safe for entry and that conditions remain acceptable for the duration of the entry.
Emergency procedures: emergency procedures and provisions, including personnel and equipment, which will be implemented.
Outside contractors: coordination of activities of any contractors who will be required to work in or around PRCSs.
Information and training: procedures and requirements for informing/training employees on PRCS responsibilities and hazards.
Program review: requirements for noting on the permit any problems encountered during the entry; procedures for reviewing canceled permits at least once a year to determine if there are needs to modify existing procedures to ensure continued employee protection.

(2) The completed permit shall be made available at the time of entry to all authorized entrants, by posting it at the entry portal or by any other equally effective means, so that the entrants can confirm the pre-entry preparations have been completed.

(3) The duration of the permit may not exceed the time required to complete the task or job identified on the permit.

b. Plans and procedures shall be developed and implemented for summoning rescue and emergency services, for rescuing entrants from PRCSs, and for preventing unauthorized personnel from attempting a rescue.

c. The entry supervisor shall designate at least one attendant who will remain, for the duration of entry operations, outside the PRCS into which entry is authorized.

d. The designated official shall develop and implement procedures to coordinate entry operations when more than one work crew are authorized entry so that employees of one crew do not endanger the employees of other crews.

e. The designated official shall review entry operations when there is reason to believe that the measures taken under the PRCS program may not be sufficient to protect personnel and shall revise the program to correct any deficiencies before subsequent entries are authorized.

f. On at least a yearly basis, the designated official shall review the canceled permits for the past 12 months and revise the program as necessary to ensure that employees participating in entry operations are protected from PRCS hazards.

06.I.06 Training.

a. All employees shall be instructed not to enter PRCSs without the proper permit and without following the procedures and practices outlined in the permit.

b. Employees who are required to enter PRCSs or act as an attendant or entry supervisor shall be trained to acquire the understanding, knowledge, and skills necessary for the safe performance of their assigned responsibilities and duties. These employees must also be familiar with the kinds of hazards they might face during entry and understand the modes, signs, symptoms and consequences of exposure.

c. Entrants, attendants, and supervisors shall receive training as specified in Table 6-2.

d. Training shall be conducted:

(1) before the employee is first assigned confined space duties (initial training),
(2) before a change in assigned duties,
(3) whenever there is a change in permit space operations that presents a hazard about which an employee has not previously been trained, and
(4) whenever installation officials have reason to believe that or that there are inadequacies in knowledge or use of these procedures.

e. When complete, training shall be certified by the instructor. The certification shall list the names of the personnel presenting and receiving the training and the dates of training.

06.I.09 On-site rescue/emergency teams.

a. Each member of the rescue/emergency team shall be provided with, and trained in the proper use of, PPE and equipment necessary for making rescues from PRCSs.

b. Each member of the rescue team/emergency shall practice making PRCS rescues at least once every 12 months. Practice drills shall simulate emergencies and rescue operations and shall involve the removal of dummies, manikins, or persons from simulated PRCS. The simulated PRCS shall mock the configurations and hazards of the PRCS from which rescue is to be performed.

TABLE 6-2

PERMIT-REQUIRED CONFINED SPACE TRAINING

Entrants shall receive training on:
€ the methods used to communicate with attendants and the means attendants will use to notify them of emergencies;
€ the operation of any specialized equipment they are expected to use, including monitoring and rescue equipment; and
€ evacuation signals and procedures and the need for entrants to notify the attendant and evacuate the PRCS if they detect any dangerous condition.

Attendants shall receive training on:
€ procedures for monitoring inside and outside the PRCS and in recognizing conditions that might be hazardous to entrants;
€ procedures for communicating with entrants;
€ procedures for evacuating entrants from the PRSC and under what conditions evacuation is required;
€ procedures for controlling access to the PRCS and to warn unauthorized people away from the space;
€ their responsibility to remain outside the PRCS during entry, unless they are relieved by another attendant; and
€ non-entry rescue procedures.

Supervisors shall receive training on:
€ verifying that the permit has been completed properly;
€ procedures for verifying that all tests specified by the permit have been conducted;
€ requirements for verifying that all procedures and equipment specified by the permit are in place before allowing entry to begin;
€ procedures for determining if conditions are acceptable for entry;
€ authorizing entry;
€ supervising entry operations; and
€ terminating entry;

c. Each member of the rescue/emergency team shall receive the same level of training as authorized entrants and shall be trained in basic first-aid and in CPR. Provisions shall be made so that whenever the team is on call, at least two members of the team shall have current certification in first aid and CPR.

06.I.10 Off-site rescue and emergency services.

a. The rescue/emergency service will be informed of the hazards they may confront when called on to perform rescues.

b. The rescue/emergency service shall be provided access to all permit spaces from which rescue may be necessary so that the service can develop appropriate rescue plans and practice rescue operations.

06.I.11 To facilitate non-entry rescues, retrieval systems or methods shall be used whenever an authorized entrant enters a PRCS, unless the retrieval equipment would increase the overall risk of entry or would not contribute to the rescue of the entrant.

a. Each authorized entrant shall use a chest or full body harness, with a retrieval line attached at the center of the entrant's back near the shoulder level or above the entrant's head (wristlets may be used in lieu of the chest or full body harness if the employer can demonstrate that the use of a chest or full body harness is infeasible or creates a greater hazard and that the use of wristlets is the safest and most effective alternative).

b. Retrieval lines shall be attached to a mechanical device or fixed point outside the permit space in such a manner that rescues can begin as soon as the rescuer becomes aware that rescue is necessary.

c. A mechanical device shall be ready to retrieve personnel from vertical PRCSs more than 1.7 m (5 ft) deep.

06.J INCLEMENT WEATHER AND ENVIRONMENTAL HAZARDS

06.J.01 When there are warnings or indications of impending severe weather (heavy rains, damaging winds, tornados, hurricanes, floods, etc.), weather conditions shall be monitored and appropriate precautions taken to protect personnel and property from the effects of the severe weather.

06.J.02 Employers shall develop a comprehensive written site-specific heat/cold stress monitoring plan, in accordance with guidance provided in the ACGIH "Threshold Limit Values and Biological Exposure Indices" and other references the employer determines applicable to protect employees exposed to temperature extremes. The plan shall be incorporated in the employer's accident prevention plan or project safety and health plan.

06.J.03 In hot environments, drinking water shall be made available to workers and workers shall be encouraged to frequently drink small amounts, e.g., one cup every 15-20 minutes: the water shall be kept reasonably cool.

06.J.04 In situations where heat stress may impact worker safety and health, worker acclimatization shall be assessed and work-rest regimens shall be established. Environmental monitoring of the Wet Bulb Globe Temperature Index shall be conducted and work loads and work rest regimens categorized for workers wearing normal permeable work clothing (lightweight pants and shirt) as specified in the ACGIH's "Threshold Limit Values and Biological Exposure Indices." For workers wearing impermeable clothing, use the guidelines contained in the NIOSH, OSHA, United States Coast Guard (USCG), EPA document "Occupational Safety and Health Guidance Manual for Hazardous Waste Site Activities" and other references deemed applicable.

06.J.05 Employees working in air temperatures of -26° C (-15° F) or less shall use the work-/warm-up regimen specified in the ACGIH "Threshold Limit Values and Biological Exposure Indices."

06.J.06 At air temperatures of 2° C (36° F) or less, workers who become immersed in water or whose clothing becomes wet shall immediately be provided a change of clothing and treated for hypothermia.

06.J.07 When manual dexterity is not required of a worker, he or she shall be provided thermally protective gloves when exposed to the following temperatures.

a. for light work, 4° C (40° F) and below, and
b. for moderate and heavy work, -7° C (20° F) and below.

06.J.08 When fine work is required to be performed with bare hands for more than 10-20 minutes in an environment below 10° C (50° F), provisions shall be established for keeping workers' hands warm.

06.J.09 Metal handles and control bars shall be covered by thermal insulating material at temperatures below -1° C (30° F).

06.J.10 Cold weather clothing requirements.

a. If wind chill is a factor at a work location, the cooling effect of the wind shall be reduced by shielding the work area or providing employees an outer windbreak layer garment.

b. Extremities, ears, toes, and nose shall be protected from extreme cold by protective clothing.

c. Employees performing light work whose clothing may become wet shall wear an outer layer of clothing which is impermeable to water.

d. Employees performing moderate to heavy work whose clothing may become wet shall wear an outer layer of clothing which is impermeable to water.

e. Outer garments must provide for ventilation to prevent wetting of inner clothing by sweat.

Table 6-3
Wind Chill Factors

Wind Speed	Cooling Power of Wind as Equivalent Chill Temperature"																
m/sec	Temperature, degrees C																
calm	4	2	-1	-4	-7	-9	-12	-15	-18	-21	-23	-26	-29	-32	-34	-37	-40	-43	-46	-48	-51
2.2	2	-1	-4	-7	-9	-12	-15	-18	-20	-23	-26	-29	-32	-34	-37	-40	-43	-46	-48	-51	-57
4.5	1	-7	-9	-12	-15	-18	-23	-26	-29	-32	-37	-40	-43	-46	-51	-54	-57	-59	-62	-68	-71
6.7	-4	-9	-12	-18	-21	-23	-29	-32	-34	-40	-43	-46	-51	-54	-57	-62	-65	-68	-73	-76	-79
8.9	-7	-12	-15	-18	-23	-26	-32	-34	-37	-43	-45	-51	-54	-59	-62	-65	-71	-73	-79	-82	-84
11.2	-9	-12	-18	-21	-26	-29	-34	-37	-43	-46	-51	-54	-59	-62	-65	-71	-76	-79	-84	-87	-93
13.4	-12	-15	-18	-23	-29	-32	-34	-40	-46	-48	-54	-57	-62	-65	-71	-73	-79	-82	-87	-90	-96
15.6	-12	-15	-21	-23	-29	-34	-37	-40	-46	-51	-54	-59	-62	-68	-73	-76	-82	-84	-90	-93	-98
17.9	-12	-18	-21	-26	-29	-34	-37	-43	-48	-51	-56	-59	-65	-71	-73	-79	-82	-87	-90	-96	-101
winds above 18 m/s have little additional effect	little danger					increasing danger (flesh may freeze within one minute)						great danger (flesh may freeze within 30 sec)									

f. If clothing is wet, the employee shall change into dry clothes before entering a cold environment

g. Workers shall change socks and removable felt insoles at regular daily intervals or use vapor barrier boots.

h. Due to the added danger of cold injury due to evaporative cooling, workers handling evaporative liquid (such as gasoline, alcohol, or cleaning fluids) at air temperatures below 4° C (40° F) shall take precautions to avoid soaking of clothing or contact with skin.

I. Eyewear providing protection against ultraviolet light, glare, and blowing ice crystals shall be provided to workers employees in snow- and/or ice-covered terrain.

06.J.11 Environmental monitoring shall be conducted as follows:

a. At air temperatures below 7° C (45° F) the temperature shall be monitored.

b. At air temperatures below -1° C (30° F) the temperature shall be measured and recorded at least every four hours. In indoor workplaces the wind speed should be measured and recorded at least every four hours when the rate of air movement exceeds 0.22 m/s (5 mph); in outdoor work situations the wind speed should be measured and recorded with the air temperature.

c. The equivalent chill temperature shall be determined using Table 6-3.

06.J.12 Workers shall be excluded from work in cold (30° F or below) if they are suffering from diseases or taking medication which interferes with normal body temperature regulation or reduces tolerance to work in cold environments.

06.J.13 Where employees are exposed to solar radiation for short periods and there is the potential for sunburn or are exposed for prolonged periods where long term exposure could lead to

health effects such as skin cancer, they should wear sun screen with a sun protection factor (SPF) appropriate for their skin type and exposure. Sun screens shall be used only in accordance with the manufacturer's recommendations.

06.K CUMULATIVE TRAUMA PREVENTION

06.K.01 Work activities that require workers to conduct lifting, handling, or carrying, rapid and frequent application of high grasping forces, repetitive hand/arm manipulations, tasks that include continuous, intermittent, impulsive, or impact hand-arm vibration or whole body vibration and other physical activities that stress the body's capabilities shall be evaluated to ensure the activities are designed to match the capabilities of the workers.

06.K.02 When work activities that stress the body's capabilities are identified, the employer shall incorporate them in the appropriate activity hazard analysis. The analysis shall identify hazards associated with such work activities, isolate causative factors, and recommend controls to be implemented. Workers performing such activities shall be trained in accordance with section 01.B.

06.K.03 Control measures considered to minimize hand-arm vibration shall include: adherence to the TLV guidelines as specified in the ACGIH in "Threshold Limit Values and Biological Exposure Indices"; the use of antivibration tools and/or gloves; implementation of work practices that keep the worker's hands and body warm and minimize the vibration coupling between the worker and the vibration tool; and application of specialized medical surveillance to identify personnel susceptible to vibration.

DEFINITIONS

Abrasive blasting: the forcible application of an abrasive to a surface by pneumatic pressure, hydraulic pressure, or centrifugal force.

Absorbed dose: energy imparted to matter by ionizing radiation per unit mass of irradiated material at the place of interest in that

material. The units of absorbed dose are the rad or the Gray (1 Gray equals 1 Joule/Kilogram equals 100 rad).

Committed dose equivalent: The dose equivalent to organs or tissues of reference that will be received from an intake of radioactive material by a person during the 50-year period following the intake.

Committed effective dose equivalent: the sum of the products of the weighting factors applicable to each of the body organs or tissues irradiated and the committed dose equivalent to these organs or tissues.

Confined space: a space that (1) is large enough and so configured that a person can bodily enter and perform assigned work; and (2) has limited or restricted means for entry or exit such that the entrant's ability to escape in an emergency would be hindered (for example, tanks, vessels, silos, storage bins, hoppers, vaults, and pits are spaces that may have limited means of entry; doorways are not considered a limited means of entry or egress); and (3) is not designed for continuous worker occupancy.

Cumulative trauma disorders - disorders of muscles, tendons, peripheral nerves, or vascular system. These can be caused, precipitated, or aggravated by intense, repeated, or sustained exertions, motions of the body, insufficient recovery, vibration, or cold.

Dose equivalent: the product of the absorbed dose in tissue, quality factor, and all other necessary modifying factors at the location of interest. The units of dose equivalent are the rem or Sievert (Sv) (1 Sievert equals 100 rem).

Dosimetry: the measure of radiological exposure.

Dust: solid particles generated by handling, crushing, grinding, or detonation of organic or inorganic materials.

Effective dose equivalent: the sum of the products of the dose equivalent to the organ or tissue and the weighting factors

applicable to each of the body organs or tissues irradiated.

Engulfment: the surrounding and effective capture by a liquid or finely divided (flowable) solid substance that can be aspirated to cause death by filling or plugging the respiratory system or that can exert enough force on the body to cause death by strangulation, constriction, or crushing.

Entry permit (permit): the written or printed document provided to allow and control entry into a permit space and that contains the information specified in ENG Form 5044-R.

Entry supervisor: the person responsible for determining if acceptable entry conditions are present at a permit space where entry is planned, for authorizing entry and overseeing entry operations, and for terminating entry as required by this section.

Exposure: a measure of the ionization produced in air by X or gamma radiation, equal to the sum of the electrical charges on all ions of one sign produced per unit mass of air. The special unit of exposure is the Roentgen equal to 2.58 x 10^{-4} Coulombs per Kilogram of air at standard temperature and pressure.

Fume: very small suspended solid particles created by condensation from the gaseous state.

Hazardous (physical) agent: noise, nonionizing and ionizing radiation, and temperature exposure of durations and quantities capable of causing adverse health effects.

Hazardous atmosphere: an atmosphere that may expose persons to the risk of death, incapacitation, impairment of ability to self rescue (that is, escape unaided from a permit space), injury, or acute illness from one or more of the following causes:

(1) flammable gas, vapor, or mist in excess of 10% of its lower flammable limit (LFL);

(2) airborne combustible dust at a concentration that meets or exceeds its LFL;

(3) atmospheric oxygen concentration below 19.5% or above 23.5%;

(4) atmospheric concentration of any substance for which a dose or permissible exposure limit is published and which could result in team member exposure in excess of its dose or permissible exposure limit;
(5) any other atmospheric condition that is immediately dangerous to life or health.

Hazardous environment: an environment with an atmosphere that poses a risk of death, incapacitation, injury, or illness due to flammable or explosive hazards; hazardous substances or agents; oxygen concentrations below 19.5% or above 22%; or any other atmospheric condition recognized as IDLH.

Hazardous substance: any substance defined as a hazardous substance under 29 CFR 1910.120, 1926.65, or 40 CFR Part 302; any chemical determined to be a hazard as specified in 29 CFR 1910.1200 or 1926.59 to include a chemical (as a gas, liquid, vapor, mist, dust, or fume) which has been identified as causing adverse health effects in exposed employees.

High radiation area: any area, accessible to personnel, in which there exists radiation at such levels that a major portion of the body could receive in any 1 hour a dose in excess of 100 millirem.

Hot work permit: written authorization to perform operations (for example, riveting, welding, cutting, burning, and heating) capable of providing a source of ignition.

Immediately dangerous to life or health (IDLH): any condition that poses an immediate or delayed threat to life or that would cause irreversible adverse health effects or that would interfere with an individual's ability to escape unaided from a permit space.

Ionizing radiation: electromagnetic and particulate radiation that causes molecular ionization; includes alpha particles, beta particles, gamma rays, x-rays, neutrons, high speed electrons and protons, and other atomic matter.

Laser: a device that produces an intense, coherent, directional beam of light.

Linebreaking: the intentional opening of a pipe, line, or duct that is or has been carrying flammable, toxic, or corrosive material, an inert gas, or any fluid at a pressure or temperature capable of causing injury.

Nonionizing radiation: those electromagnetic radiations that do not cause ionization (but may be absorbed) in biological systems; includes low frequency ultraviolet light, infrared light, heat, laser, microwaves, and radio waves.

Non-permit confined space: a confined space that does not contain, or with respect to atmospheric hazards does not have the potential to contain, any hazard capable of causing death or serious physical harm.

Normally unoccupied remote facility: a facility operated, maintained, or serviced by employees who visit the facility only periodically to check its operation and to perform necessary operating or maintenance tasks. No employees are permanently stationed at the facility. Facilities meeting this definition are not contiguous with, and must be geographically remote from all other buildings, processes, or persons.

Oxygen deficient atmosphere: an atmosphere containing less than 19.5 percent oxygen by volume.

Oxygen enriched atmosphere: an atmosphere containing more than 23.5 percent oxygen by volume.

Permit-required confined space (permit space): a confined space that has one or more of the following characteristics:
(1) contains or has the potential to contain a hazardous atmosphere;
(2) contains a material that has the potential for engulfing an entrant;
(3) has an internal configuration such that an entrant could be trapped or asphyxiated by inwardly converging walls or by a floor that slopes downward and tapers to a smaller cross-section; or
(4) contains any other recognized serious safety or health hazard.

Prohibited condition: any condition in a permit space that is not allowed by the permit during the period when entry is authorized.

Rad: a measure of the dose of ionizing radiation to the body tissue in terms of the energy absorbed per unit of mass of the tissue.

Radiation area: any area, accessible to personnel, in which there exists radiation at such levels that a major portion of the body could receive in any one hour a dose in excess of 5 millirems, or in any 5 consecutive 8-hour days a dose in excess of 100 millirems.

Radioactive material: any material that emits, by spontaneous nuclear disintegration, electromagnetic or particulate emanations.

Radiological device: machinery or equipment that produces or contain ionizing radiation, such as nuclear density meters and radiographic testing machines.

Rem (roentgen equivalent in man): a measure of the dose of ionizing radiation to body tissue in terms of its biological effect; the dose required to produce the same biological effect as one roentgen of high-penetration of x-rays.

Restricted area: when used in conjunction with ionizing radiation, any area to which access is controlled by the employer for purposes of protecting individuals from exposure to ionizing radiation.

Shallow dose equivalent: applies to the external exposure of the skin or an extremity. It is taken as the dose equivalent at a tissue depth of 0.007 cm averaged over an area of 1 cm^2.

Specular reflections: reflections from a smooth surface, such as a mirror, glass, metal, etc.

Total effective dose equivalent: the sum of the deep-dose equivalent (for external exposures) and the committed effective dose equivalent (for internal exposures).

Work load classification:
- € sedentary: sitting
- € light: sitting or standing to control machines; performing light hand or arm work.
- € moderate: walking about with moderate lifting or pushing.
- € heavy: physical labor such as pick and shovel work.

Weighting factor: factor that represents the proportion of the total stochastic (cancer plus genetic) risk resulting from irradiation to tissue to the total risk when the whole body is irradiated uniformly.

Wet bulb globe temperature index: a measurement of environmental factors that correlate with human deep body temperature and other physiological responses to heat.

SECTION 7

LIGHTING

07.A GENERAL

07.A.01 While work is in progress, offices, facilities, accessways, working areas, construction roads, etc., shall be lighted by at least the minimum light intensities specified in Table 7-1.

07.A.02 Means of egress.

a. Means of egress shall be illuminated, with emergency and non-emergency lighting, to provide a minimum of 11 lux (lx) (1 footcandle (lm/ft^2)), measured at the floor. ***> Reference NFPA 101***

b. The illumination shall be arranged so that the failure of any single lighting unit, including the burning out of an electric bulb, will not leave any area in total darkness.

TABLE 7-1
MINIMUM LIGHTING REQUIREMENTS

Facility or function	Illuminance - lx (lm/ft^2)
Accessways - general indoor - general outdoor - exitways, walkways, ladders, stairs	 55 (5) 33 (3) 110 (10)
Administrative areas (offices, drafting and meeting rooms, etc.)	540 (50)
Chemical laboratories	540 (50)
Construction areas - general indoor - general outdoor - tunnels and general underground work areas (minimum 110 lux required at tunnel and shaft heading during drilling, mucking, and scaling)	 55 (5) 33 (3) 55 (5)
Conveyor routes	110 (10)
Docks and loading platforms	33 (3)
Elevators, freight and passenger	215 (20)
First aid stations and infirmaries	325 (30)
Maintenance/operating areas/shops - vehicle maintenance shop - carpentry shop - outdoors field maintenance area - refueling area, outdoors - shops, fine detail work - shops, medium detail work - welding shop	 325 (30) 110 (10) 55 (5) 55 (5) 540 (50) 325 (30) 325 (30)
Mechanical/electrical equipment rooms	110 (10)
Parking areas	33 (3)
Toilets, wash, and dressing rooms	110 (10)
Visitor areas	215 (20)
Warehouses and storage rooms/areas - indoor stockroom, active/bulk storage - indoor stockroom, inactive - indoor rack storage - outdoor storage	 110 (10) 55 (5) 270 (25) 33 (3)
Work areas - general (not listed above)	325 (30)

SECTION 8

ACCIDENT PREVENTION SIGNS, TAGS, LABELS, AND SIGNALS AND PIPING SYSTEM IDENTIFICATION

08.A SIGNS, TAGS, LABELS, AND PIPING SYSTEMS

08.A.01 Signs, tags, and labels shall be provided to give adequate warning and caution of hazards and instruction and directions to workers and the public.

08.A.02 Signs, tags, and labels shall be visible at all times when the hazard or problem exists and shall be removed or covered when the hazard or problem no longer exists.

08.A.03 All employees shall be informed as to the meaning of the various signs, tags, and labels used throughout the workplace and what special precautions are required: all employees shall be instructed that danger signs and tags indicate immediate danger and shall be informed of any special precautions that may be required.

08.A.04 The type of sign or tag used in a particular situation shall be appropriate for the degree of hazard or intent of message.
> See Table 8-1

a. Signs for contractor operations shall be in accordance with Table 8-1; for USACE operations, design shall be in accordance with Table 8-1 or the USACE Sign manual.

b. Color coding shall be in accordance with Table 8-2.

c. Piping systems shall be identified: it is recommended that the identification of piping systems (including pipes, fittings, valves, and pipe coverings) be in accordance with Table 8-3 and Figure 8-3.

d. The radio frequency radiation hazard warning symbol specified in Figure 8-4 shall be used in the identification of radio frequency radiation hazards.

e. Laser caution and danger signs shall be in accordance with Figure 8-5.

f. Ionizing radiation warning signs, labels, and signals shall contain the symbol show in Figure 8-6.

g. Vehicles or equipment that, by design, move at 1.1 m/s (25 mph) or less on public roads shall display the slow-moving vehicle emblem specified in Figure 8-7.

08.A.05 Each container of hazardous material shall be labeled, tagged, or marked with the identity of the material(s), appropriate hazard warnings, potential health effects, and the name and address of the manufacturer, importer, or other responsible party. ***> See 06.B.01***

a. Signs, placards, process sheets, batch tickets, operating procedures, or other written means may be used in lieu of affixing labels to stationary process containers if the alternative method identifies the containers to which it is applicable and conveys the information required above. The written information shall be readily available to employees in their work area throughout each work shift.

b. Portable containers into which hazardous material(s) are transferred from labeled containers and which are intended only for the immediate use by the employee who performs the transfer are not required to be labeled; however, there shall be a means of indicating that the hazardous material has been used in the container.

08.A.06 Signs, tags, and labels shall be located as close as safely possible to their respective hazards; tags will be affixed by a positive means (such as wire, string, or adhesive) that prevents their loss or unintentional removal.

08.A.07 Signs, tags, and labels shall be legible and in English; when there are employees who speak a language other than English and to whom the information is to be conveyed, the information may also be presented in their language if it is

presented in English as well. ***> See 01.A.04***

08.A.08 Signs shall be furnished with rounded or blunt corners and shall be free from sharp edges, burrs, splinters, or other sharp projections; the ends or heads of bolts or other fastening devices shall be located so that they are not a hazard. Wording shall be easily read, concise, and accurate; the sign should contain sufficient information to be understood.

08.A.09 Construction areas shall be posted with legible traffic signs at points of hazard.

08.A.10 Signs required to be seen at night shall be lighted or reflectorized.

08.A.11 Accident prevention tags shall be used only as a temporary means of warning employees of an existing hazard, such as defective tools, equipment, and lockout. ***> See Section 12 for tagout requirements.***

08.A.12 Tags shall contain a signal word (either "danger" or "caution") and a major message (presented in either pictographs, written text, or both) to indicate the specific hazardous condition or the instruction to be communicated to the employee. The signal word shall be readable at a minimum distance of five feet or such greater distance as warranted by the hazard. The signal word and major message shall be understandable to all employees who may be exposed to the hazard. ***> See Figure 8-2***

08.A.13 Kerosene lamps and open flame pots shall not be used for or with warning signs or devices.

08.A.14 Warning signs shall be placed on unattended Government-owned floating plant and land based heavy equipment accessible to the public and shall read **DANGER NO TRESPASSING US GOVERNMENT PROPERTY**.

08.B SIGNAL SYSTEMS, PERSONNEL, AND PROCEDURES

08.B.01 A standard signal system shall be used on all operations.

a. Hand signals for crane operations shall conform to those given in Figures 8-8 and 8-9.

b. Traffic flagging procedures shall be in accordance with the Federal Highway Administration's "*Manual on Uniform Traffic Control Devices for Streets and Highways*."

c. For Marine signals, see Section 19.

08.B.02 Signal standards shall be posted at the operator's position, signal control points, and other points as necessary to inform those concerned.

08.B.03 Manual (hand) signals may be used when the distance between the operator and signal person is not more than 30 m (100 ft); radio, telephone, or a visual and audible electrically-operated system shall be used when the distance between operator and signal person is more than 30 m (100 ft) or when they cannot see each other.

08.B.04 A signal person shall be provided when the point of operation (includes area of load travel and area immediately surrounding the load placement) is not in full view of the vehicle, machine, or equipment operator; when vehicles are backed more than 30 m (100 ft); when terrain is hazardous; or when two or more vehicles are backing in the same area.

08.B.05 A flag person or other controls shall be provided when operations or equipment on or next to a highway create a traffic hazard; an exception shall be made only when an adequate mechanical signaling or control device is provided for safe direction of the operation.

08.B.06 Where manual (hand) signals are used, only one person shall be designated to give signals to the operator; this signal

person shall be located to see the load and be clearly visible to the operator at all times.

08.B.07 Flag signaling shall be accomplished by use of red flags at least 45 cm (18 in) square or sign paddles; in periods of darkness, red lights shall be used.

08.B.08 An orange or red warning garment shall be worn by flag and signal persons; warning garments worn at night shall be of reflectorized material.

08.B.09 Signal systems shall be protected against unauthorized use, breakage, weather, or interference: any malfunction shall be cause to stop all work.

08.B.10 Only persons who are competent and qualified by experience with the operations being directed shall be used as signal persons.

08.B.11 Signal persons shall back one vehicle at a time; while under control of a signal person, the driver shall not back or maneuver until directed and the driver shall stop when visual contact with the signal person is lost.

08.B.12 The signal person shall have a warning device of clear range and penetrating sound to warn persons when the load is coming in so they have time to get in the clear.

TABLE 8-1

ACCIDENT PREVENTION SIGN REQUIREMENTS

TYPE	PURPOSE	DESIGN
DANGER	Indicates a specific immediate and grave danger, a hazard capable of producing irreversible damage or injury, and prohibitions against harmful activity.	Layout as shown in Fig 8-1. Shall have the word “DANGER” in white within a red oval outlines in white on a black rectangular background in the upper panel and a lower panel for additional wording or symbols in black or red on white for additional wording or symbols in black or red on a white background.
CAUTION	Call attention to a specific potential hazard or a hazard capable of resulting in severe, but not irreversible, injury or damage.	Layout as shown in Fig 8-1. Shall have the word “CAUTION” in yellow on a black background and a lower panel for additional sign wording in black on a yellow background.
GENERAL SAFETY	Includes notices of general practice and rules relating to health, first aid, medical equipment, sanitation, housekeeping, and general safety.	Layout as shown in Fig 8-1 or consisting of a single panel. Shall have the appropriate keyword as the signal word in white on a green background in the upper panel and a lower panel for additional sign wording or symbols in black or green on a white background. Alternatively, the entire sign may be white letters on a green background.
FIRE AND EMERGENCY	Used only to label or point the way to fire extinguishing equipment, fire escapes and exits, gas shutoff valves, sprinkler drains, and emergency procedures.	Layout as shown in Fig 8-1 or consisting of a single red panel. Shall have the appropriate keyword as the signal word in white on a red background in the upper panel and a lower panel for additional sign wording or symbols in red on a white background. Alternatively, the entire sign may be white letters on a red background.
INFORMATION	Provide information of a general nature, such as designation of facilities or services, in order to avoid confusion or misunderstanding.	Layout as shown in Fig 8-1 or consisting of a single panel. Should have the singal word “NOTICE” in white on a blue background in the upper panel and a lower panel for additional wording or symbols in blue or black on a white background. Alternatively, the entire sign may be in white letters on a blue background.
EXIT	Used to indicate exits.	Lettered in legible letters, not less than 15 cm (6 in) hign, on a white field. The principal stroke of the letters shall be at least 2 cm (3/4 in) in width.

FIGURE 8-1

ACCIDENT PREVENTION SIGNS

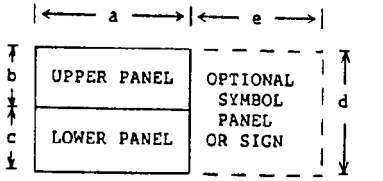

- 2:1 < a:b < 5:1
- b ≥ c
- c ≤ 2a
- if optional panel is used,
  - d = e = b + c
  - panel is placed to the right

Minimum Lettering Requirements

Height of Letter (in.)	Viewing Distance (ft.)
5	200 - 250
4 1/2	150 - 200
4	120 - 150
3 1/2	105 - 120
3	90 - 105
2 1/2	75 - 90
2	60 - 75
1 1/2	40 - 60
1	30 - 40
3/4	20 - 30
1/2	10 - 20
1/4	- 10

FIGURE 8-2

ACCIDENT PREVENTION TAGS

Keyword/Phrase	Keyword/Phrase Print Color	Background Color	Tag Color
"DANGER"	White in red oval	Black	White
"CAUTION"	Yellow	Black	Yellow
"DO NOT OPERATE"	White	Red	White
"OUT OF ORDER" "DO NOT USE"	White	Black	White
Informational message or inspection	Black or green	N/A	Green or white White or black

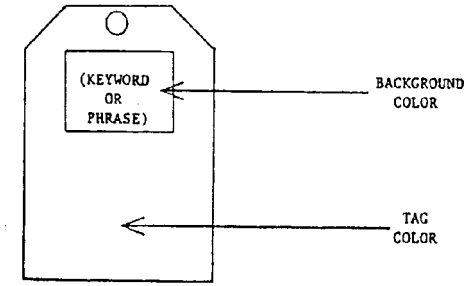

TABLE 8-2

ACCIDENT PREVENTION COLOR CODING

COLOR	PURPOSE
Red	Red shall be the color used for identifying dangerous conditions, emergency controls, fire detection equipment and fire suppression systems, and containers of flammable liquids.
Oragne	Orange shal lbe the color used for designating dangerous parts of machines and energeized equipment.
Yellow	Yellow shall be the color for designating conditions requiring caution, marking dangerous chemicals, marking physical hazards, and markings for ionizing radiation.
Green	Green shall be the color for designating safety equipment and operator devices and the location of fist aid and safety equipment (other than firefighting equipment).
Blue	Blue shall be the color used for designating information of a non-safety nature.
Purple	Purple shal lbe the color used to designate ionizing radiation hazards.

TABLE 8-3
IDENTIFICATION OF PIPING SYSTEMS

Hazard	Field Color	Legend Color
Flammable or explosive material	Yellow	Black
Chemically active or toxic materials	Yellow	Black
Materials of extreme pressure	Yellow	Black
Materials under extreme pressure	Yellow	Black
Radioactive materiels	Yellow	Black
Inherently low-hazard+ materials	Green	White
Inherently low-hazards+ gases	Blue	White
Fire quenching materials (e.g., water, foam)	Red	White

FIGURE 8-3
IDENTIFICATION OF PIPING SYSTEMS

Outside diameter of pipe or covering	Length of color field "A"	Size of letters "B"
3/4 to 1 1/4 inches	8 inches	1/2 inch
1 1/2 to 2 inches	8 inches	3/4 inch
2 1/2 to 6 inches	12 inches	1 1/4 inch
8 to 10 inches	24 inches	2 1/2 inch
over 10 inches	32 inches	3 1/2 inch

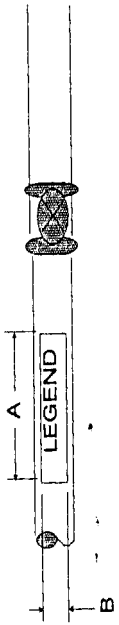

FIGURE 8-4

RADIO FREQUENCY WARNING SYMBOL

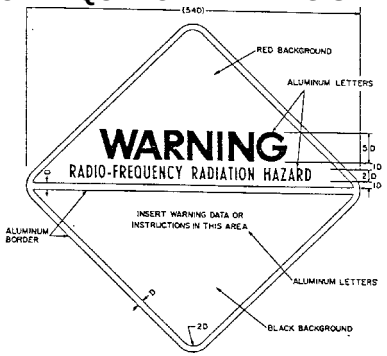

D = scaling unit
Lettering: ratio of letter height to thickness of letter lines

upper triangle:	5 to 1 = large
	6 to 1 = medium
lower triangle:	4 to 1 = small
	6 to 1 = medium

Symbol is square, triangles are right-angle isosceles

FIGURE 8-5

RADIOLOGICAL WARNING SYMBOL

1. Cross-hatched area is to be magenta or purple.
2. Background is to be yellow.

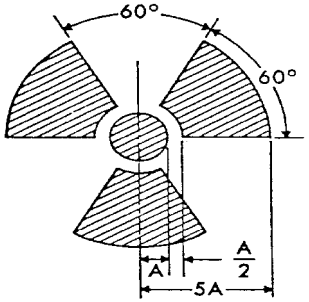

FIGURE 8-6

LASER DANGER AND CAUTION SIGNS

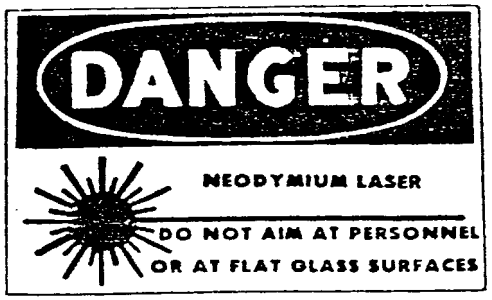

Example of label for Class 3b and Class 4 LASER DEVICES.

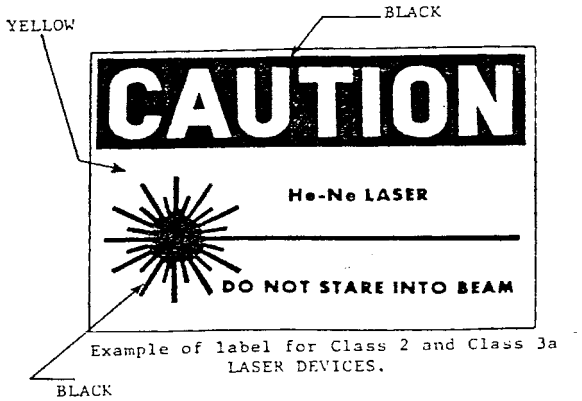

Example of label for Class 2 and Class 3a LASER DEVICES.

FIGURE 8-7

SLOW MOVING VEHICLE EMBLEM

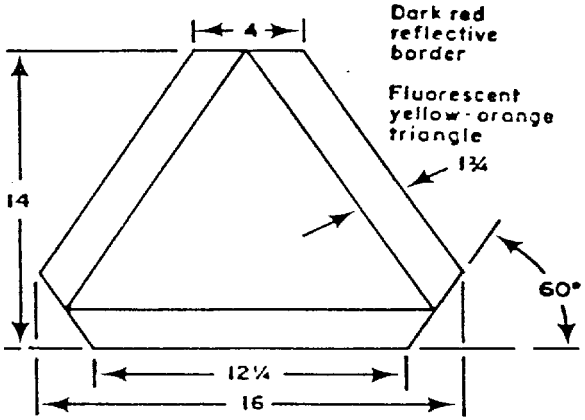

NOTE: All dimensions are in inches.

FIGURE 8-8

CRANE SIGNALS

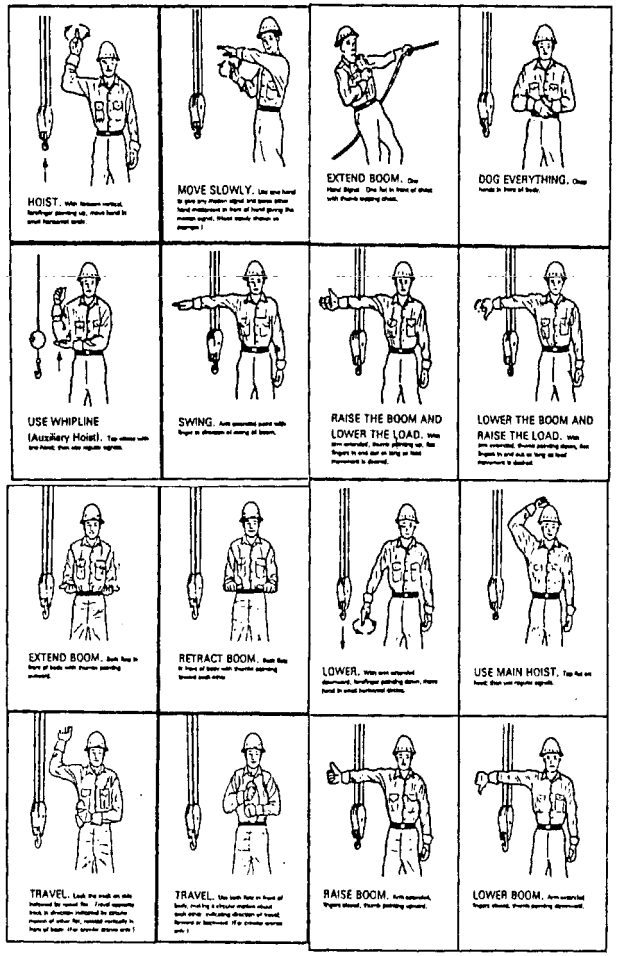

FIGURE 8-8, continued

CRANE SIGNALS

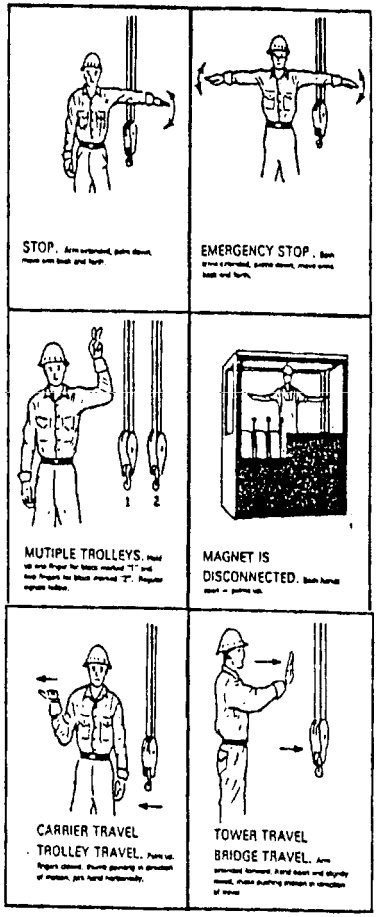

NOTE: Crane signals taken from ANSI B30 series standards with permission of The American Society of Mechanical Engineers.

FIGURE 8-9

HELICOPTER SIGNALS

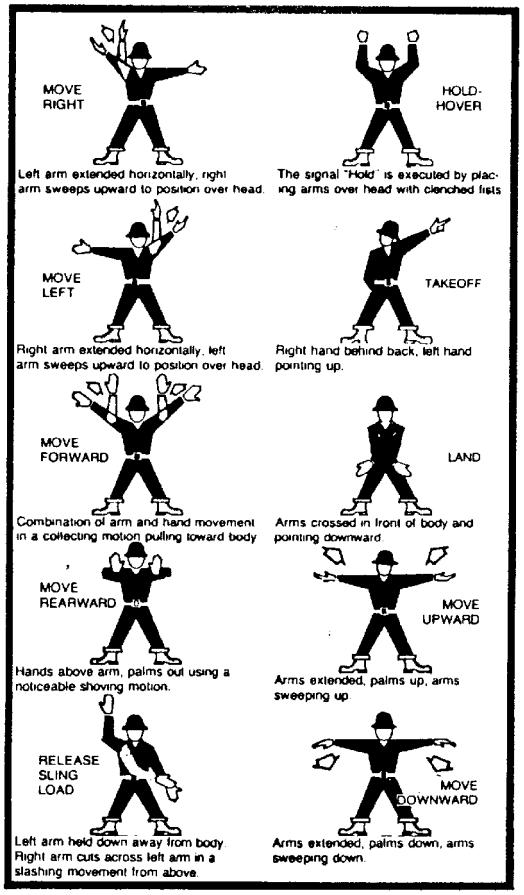

SECTION 9

FIRE PREVENTION AND PROTECTION

09.A GENERAL

09.A.01 An annual survey of the suitability and effectiveness of fire prevention and protection measures and facilities at each project or installation shall be made by a qualified person: records of the survey findings and recommendations shall be retained on file at the project or installation.

09.A.02 When unusual fire hazards exist or fire emergencies develop, additional protection shall be provided as required by the designated authority.

09.A.03 The designated authority shall survey all activities and determine which require a hot work permit.

09.A.04 Fires and open flame devices shall not be left unattended.

09.A.05 All sources of ignition shall be prohibited within 15 m (50 ft) of operations with a potential fire hazard: the area shall be conspicuously and legibly posted **NO SMOKING OR OPEN FLAME**.

09.A.06 Smoking shall be prohibited in all areas where flammable, combustible, or oxidizing materials are stored: **NO SMOKING OR OPEN FLAME** signs will be posted in all prohibited areas.

09.A.07 Areas where there is danger of underground fire shall not be used for the storage of flammable or combustible materials.

09.A.08 Noncompatible materials that may create a fire hazard shall be segregated by a barrier having a fire resistance of at least one hour.

09.A.09 Paint-soiled clothing and drop cloths, when not in use, shall be stored in well-ventilated steel cabinets or containers.

09.A.10 Insulating material with a combustible vapor barrier shall be stored at least 8 m (25 ft) from buildings or structures: only the quantity required for one day's use shall be permitted in buildings under construction.

09.A.11 Disposal of combustible waste materials shall be in compliance with applicable fire and environmental laws and regulations.

09.A.12 Paint scrapings and paint-saturated debris shall be removed from the premises on a daily basis.

09.A.13 Burning operations.

a. Burning areas shall be established in coordination with the designated authority and with the agency responsible for monitoring fire potential at the location of the proposed burning area.

b. Burning operations shall be in compliance with federal, state, and local regulations and guidelines.

c. A sufficient force to control and patrol the burning operations shall be maintained until the last embers have been extinguished.

d. Bump blocks shall be provided where trucks back to a fire or burning pit.

09.A.14 Low density fiber board, combustible insulation, or vapor barriers with a flame spread rating greater than 25 shall not be installed in permanent buildings.

09.A.15 Temporary enclosures shall be covered with flame-proof tarpaulins or material of equivalent fire-resistant characteristics.

09.A.16 When outside help is relied upon for fire protection, a

written agreement shall be made or a memorandum of record, stating the terms of the arrangement and the details for fire protection services, shall be provided to the designated government authority.

09.A.17 Temporary building spacing shall be as follows:

a. The minimum space between one-story non fire-resistive buildings shall be 6 m (20 ft).

b. The minimum space between two-story non fire-resistive buildings shall be 8 m (25 ft).

c. Buildings other than non fire-resistive buildings shall comply with recommendations of the National Fire Protection Association (NFPA).

(A group of buildings in which the total ground floor area does not exceed 185 m^2 (2,000 ft^2) shall be considered as one building for the above purpose. However, each building in the group shall be horizontally separated by at least 3 m (10 ft) on each side from other buildings.)

09.A.18 Fire lanes providing access to all areas shall be established and maintained free of obstruction.

09.A.19 Vehicles, equipment, materials, and supplies shall not be placed so that access to fire hydrants and other fire fighting equipment is obstructed.

09.A.20 Hazardous locations.

a. Electrical lighting shall be the only means of artificial illumination in areas where flammable liquids, vapors, fumes, dust, or gases are present.

b. All electrical equipment and installations in hazardous locations shall be in accordance with the National Electrical Code (NEC) for hazardous locations.

c. Globes or lamps shall not be removed or replaced nor shall repairs be made on the electrical circuit until it has been deenergized.

09.A.21 Clearance shall be maintained around lights and heating units to prevent ignition of combustible materials.

09.A.22 All combustibles shall be shielded from the flames of torches used to cut or sweat pipe.

09.A.23 Precautions shall be taken to protect formwork and scaffolding from exposure to, and spread of, fire.

09.A.24 Fire protection in the construction process.

a. Fire cut-offs shall be retained in buildings undergoing alterations or demolition until operations require their removal.

b. Where a water distribution system is required for the protection of buildings or other structures, water mains and hydrants shall be installed before or concurrent with the construction of facilities: until the permanent system is in operation, an equivalent temporary system shall be provided.

c. Permanent (fixed) extinguishing equipment and water supply for fire protection shall be installed and in operable condition as soon as possible: the scheduling of sprinkler installation shall closely follow the building construction and, following completion of each story, shall be placed in service as soon as laws permit.

d. During demolition or alterations, existing automatic sprinkler systems shall be retained in service as long as reasonable. Modification of sprinkler systems to permit alterations or additional demolition should be expedited so that the system may be returned to service as quickly as possible. Sprinkler control valves shall be checked daily at close of work to ascertain that the protection is in service. The operation of sprinkler control valves is permitted only when approved by the

designated authority.

e. During the construction process, the construction of fire walls and exit stairways required for completed buildings shall have priority; fire doors, with automatic closing devices, shall be hung on openings as soon as practical.

09.A.25 Water supply and distribution facilities for fire fighting shall be provided and maintained in accordance with recommendations of NFPA or regulations of USCG.

09.A.26 Recommendations of NFPA and regulations of the USCG shall be complied with in situations not covered in this section. Where local building codes are established, the more stringent requirements shall apply.

09.B FLAMMABLE AND COMBUSTIBLE LIQUIDS

09.B.01 All storage, handling, and use of flammable and combustible liquids shall be under the supervision of a qualified person.

09.B.02 All sources of ignition shall be prohibited in areas where flammable and combustible liquids are stored, handled, and processed: suitable **NO SMOKING OR OPEN FLAME** signs shall be posted in all such areas.

09.B.03 Fire protection requirements.

a. At least one portable fire extinguisher rated 20-B:C shall be provided on all tank trucks or other vehicles used for transporting and/or dispensing flammable or combustible liquids.

b. Each service or refueling area shall be provided with at least one fire extinguisher rated not less than 40-B:C and located so that an extinguisher shall be within 30 m (100 ft) of each pump, dispenser, underground fill pipe opening, and lubrication or service area.

09.B.04 Flammable liquids shall be kept in closed containers or tanks when not in use.

09.B.05 Workers shall guard carefully against any part of their clothing becoming contaminated with flammable or combustible fluids; they shall not be allowed to continue work if their clothing becomes contaminated and must remove or wet down the clothing as soon as possible.

09.B.06 No flammable liquid with a flash point (closed cup test) below 38° C (100° F) shall be used for cleaning purposes or to start or rekindle fires.

09.B.07 Ventilation adequate to prevent the accumulation of flammable vapors to hazardous levels shall be provided in all areas where flammable and combustible liquids are handled or used.

09.B.08 Only approved (by a nationally recognized testing laboratory) containers and portable tanks shall be used for the storage of flammable and combustible liquids.

a. Metal containers and portable tanks (less than 2.5 m^3 (660 gal) individual capacity) meeting the requirements of, and containing products authorized by, Chapter I, Title 49 of the *Code of Federal Regulations* (U.S. DOT Hazardous Materials Regulations), Chapter 9 of the United Nations Rules for the Transportation of Dangerous Goods, or NFPA 386, *Standard for Portable Shipping Tanks for Flammable and Combustible Liquids*, shall be acceptable.

b. Plastic containers meeting the requirements of, and used for petroleum products within the scope of, one or more of the following specifications shall be acceptable: ANSI/ASTM D3435, *Plastic Containers (Jerry Cans) for Petroleum Products*: ASTM F 852, *Standard for Portable Gasoline Containers for Consumer Use*; ASTM F 976, *Standard for Portable Kerosine Containers for Commercial Use*; ANSI/UL 1313, *Nonmetallic Safety Cans for Petroleum Products*.

c. Plastic drums meeting the requirements of and containing products authorized by Title 49 of the *Code of Federal Regulations* or by Chapter 9 of the United Nations' Recommendations on the Transport of Dangerous Goods shall be acceptable.

d. Fiber drums that meet the requirements of Item 296 of the National Motor Freight Classification (NMFC) or Rule 51 of the Uniform Freight Classification (UFC) for Types 2A, 3A, 3B-H, 3B-L, or 4A and meet the requirements of and contain liquid products authorized either by Chapter I, Title 49 of the *Code of Federal Regulations* (U.S. DOT Hazardous Materials Regulations) or by DOT exemption shall be acceptable.

09.B.09 Portable tanks (less than 2.5 m^3 (660 gal) individual capacity) shall be provided with one or more devices installed in the top with sufficient emergency venting capacity to limit internal pressure under fire exposure conditions to 69 kPa (10 psig) or 30% of the bursting pressure of the portable tank, whichever is greater.

a. At least one pressure-actuated vent having a minimum capacity of 170 m^3 (6000 ft^3) of free air per hour shall be used: it shall be set to open at not more than 35 kPa (5 psig).

b. If fusible vents are used, they shall be actuated by elements that operate at a temperature not exceeding 115° C (300° F).

c. Where plugging of a press-re-actuated vent can occur, fusible plugs or venting devices that soften to failure at a maximum of 115° C (300° F) under fire exposure shall be permitted to be used for the entire emergency venting requirement.

09.B.10 The design, construction, and use of storage tanks whose capacity exceeds 660 gal shall be as specified in Section 2 of NFPA 30, *Flammable and Combustible Liquids Code*.

09.B.11 The maximum allowable size for a container or metal portable tank (less than 2.5 m^3 (660 gal) individual capacity) shall not exceed the following:

Container type	Flammable Liquids Class			Combustible Liquids Class	
	IA	IB	IC	II	III
Glass	473 mL	946 mL	3.8 L	3.8 L	3.8 L
Metal (other than DOT drums) or approved plastic	3.8 L	19 L	19 L	19 L	19 L
Safety cans	7.6 L	19 L	19 L	19 L	19 L
Metal drum (DOT specification)	0.23 m^3	0.23 m^3	0.23 m^3	0.23 m^3	0.23 m^3
Approved metal portable tank	2.5 m^3	2.5 m^3	2.5 m^3	2.5 m^3	2.5 m^3
Polyethylene DOT Spec 34, UN 1H1, or as authorized by DOT Exemption	3.8 L	19 L	19 L	0.23 m^3	0.23 m^3
Fiber drum NMFC or UFC Type 2A, Types 3A, 3B-H, or 3B-L, or Type 4A	-	-	-	0.23 m^3	0.23 m^3

09.B.12 Storage cabinets and areas.

a. The design, construction, and use of storage cabinets shall be as specified in Section 4-3 of NFPA 30, *Flammable and Combustible Liquids Code*.

b. The design, construction, and use of indoor storage areas shall be as specified in Sections 4-4 through 4-6 of NFPA 30, *Flammable and Combustible Liquids Code*.

c. The design, construction, and use of outdoor storage areas shall be as specified in Section 4-7 of NFPA 30, *Flammable and*

Combustible Liquids Code.

d. Fire protection and storage for storage cabinets and areas shall be as specified in Section 4-8 of NFPA 30, *Flammable and Combustible Liquids Code*.

09.B.13 Flammable and combustible liquids in quantities greater than that required for one day's use shall not be stored in buildings under construction and not more than a two-day supply shall be stored on paint barges.

09.B.14 Flammable and combustible liquids shall not be stored in areas used for exits, stairways, or safe passage of people.

09.B.15 Safety cans and other portable containers for flammable liquids having a flash point at or below 23° C (73° F) shall be painted red with a yellow band around the can and the name of the contents legibly indicated on the container.

09.B.16 Unopened containers of flammable and combustible liquids, such as paints, varnishes, lacquers, thinners, and solvents, shall be kept in a well-ventilated location, free of excessive heat, smoke, sparks, flame, or direct rays of the sun.

09.B.17 In areas where flammable and combustible liquids are handled or stored, a self-closing metal refuse can, listed by a nationally recognized testing laboratory, shall be provided and maintained in good condition.

09.B.18 Where liquids are used or handled, provisions shall be made to promptly and safely dispose of leakage or spills.

09.B.19 Flashlights and electric lanterns used during handling of flammable and combustible liquids shall be listed by a nationally recognized testing laboratory for use in such hazardous areas.

09.B.20 Dispensing flammable and combustible liquids-general.

a. All pumping equipment used for the transfer of flammable

and combustible liquids shall be listed by a nationally recognized testing laboratory or approved by, and labeled or tagged in accordance with, the federal agency having jurisdiction, such as the DOT.

b. Flammable liquid dispensing systems shall be electrically bonded and grounded. All fuel tanks, hoses, and containers of 19 L (5 gal) or less shall be kept in metallic contact while flammable liquids are being transferred; transfer of flammable liquids in containers in excess of 19 L (5 gal) shall be done only when the containers are electrically bonded.

c. Flammable or combustible liquids shall be drawn from, or transferred into, vessels, containers, or tanks within a building or outside only through a closed piping system, from safety cans, by means of a device drawing through the top, or from a container, or portable tanks, by gravity or pump, through an approved self closing valve. Transferring by means of air pressure on the container or portable tanks is prohibited.

d. Areas in which flammable or combustible liquids are transferred in quantities greater than 19 L (5 gal) from one tank or container to another shall be separated from other operations by at least 8 m (25 ft) or a barrier having a fire resistance of at least one hour. Drainage or other means shall be provided to control spills. Natural or mechanical ventilation shall be provided to maintain the concentration of flammable vapor at or below 10% of the lower flammable limit.

e. Dispensing units shall be protected against collision damage.

f. Dispensing nozzles and devices for flammable liquids shall be of an approved type.

g. Lamps, lanterns, heating devices, and similar equipment shall not be filled while hot: these devices shall be filled only in well-ventilated rooms free of open flames or in open air and shall not be filled in storage buildings.

09.B.21 Service and refueling areas.

a. Dispensing hoses shall be of an approved type; dispensing nozzles shall be an approved automatic-closing type without a latch-open device.

b. Equipment using flammable liquid fuel shall be shut down during refueling, servicing, or maintenance: this requirement may be waived for diesel fueled equipment serviced by a closed system with attachments designed to prevent spillage.

c. Dispensing of flammable fluids from tanks of 0.21 m^3 (55 gal) capacity or more shall be by approved pumping arrangement. Transferring by air pressure on the container or portable tank is prohibited.

d. Clearly identified and easily accessible switch(es) shall be provided at a location remote from dispensing devices to shut off the power to all dispensing devices in an emergency.

09.B.22 Tank cars/trucks.

a. Tank cars/trucks shall be spotted and not loaded or unloaded until brakes have been set and wheels chocked.

b. Tank cars/trucks shall be attended for the entire time they are being loaded or unloaded. Precautions shall be taken against fire or other hazards.

c. Tank cars/trucks shall be properly bonded and grounded while being loaded or unloaded. Bonding and grounding connections shall be made before dome covers are removed on tank cars/trucks and shall not be disconnected until such covers have been replaced. Internal vapor pressure shall be relieved before dome covers are opened.

09.C LIQUEFIED PETROLEUM GAS (LP-GAS)

09.C.01 Storage, handling, installation, and use of LP-Gases and systems shall be in accordance with NFPA Standard 58 and

USCG regulations, as applicable.

09.C.02 LP-Gas containers, valves, connectors, manifold valve assemblies, regulators, and appliances shall be of an approved type.

09.C.03 Any appliance that was originally manufactured for operation with a gaseous fuel other than LP-Gas and is in good condition may be used with LP-Gas only after it is properly converted, adapted, and tested for performance with LP-Gas.

09.C.04 Polyvinyl chloride and aluminum tubing shall not be used in LP-Gas systems.

09.C.05 Safety devices.

a. Every container and vaporizer shall be provided with one or more safety relief valves or devices. These valves and devices shall be arranged to afford free vent to the outside air and discharge at a point not less than 2 m (5 ft) horizontally from any building opening that is below the discharge point.

b. Container safety relief devices and regulator relief vents shall be located not less than 2 m (5 ft) in any direction from air openings into sealed combustion system appliances or mechanical ventilation air intakes.

c. Shut-off valves shall not be installed between the safety relief device and the container, or the equipment or piping to which the safety relief device is connected, except that a shut-off valve may be used where the arrangement of the valve is such that full required capacity-flow through the safety relief device is always afforded.

09.C.06 Container valves and accessories.

a. Valves, fittings, and accessories connected directly to the container, including primary shut off valves, shall have a rated working pressure of at least 1725 kPa (250 psig) and shall be of material and design suitable for LP-Gas service.

b. Connections to containers - except safety relief connections, liquid level gauging devices, and plugged openings - shall have shutoff valves located as close to the container as practical.

09.C.07 Multiple container systems.

a. Valves in the assembly of multiple container systems shall be arranged so that replacement of containers can be made without shutting off the flow of gas in the system (this is not to be construed as requiring an automatic changeover device).

b. Regulators and low-pressure relief devices shall be rigidly attached to the cylinder valves, cylinders, supporting standards, building walls, or otherwise rigidly secured and shall be installed or protected from the elements.

09.C.08 LP-Gas containers and equipment shall not be used in unventilated spaces below grade in pits, below-decks, or other spaces where dangerous accumulations of heavier-than-air gas may accumulate due to leaks or equipment failure.

09.C.09 Welding is prohibited on LP-Gas containers.

09.C.10 Dispensing.

a. Equipment using LP-Gas shall be shut down during refueling operations.

b. Filling of fuel containers for motor vehicles from bulk storage containers shall be performed not less than 3 m (10 ft) from the nearest masonry-walled building, not less than 8 m (25 ft) from the nearest building of other construction, and, in any event, not less than 8 m (25 ft) from any building opening.

c. Filling, from storage containers, of portable containers or containers mounted on skids shall be performed no less than 15 m (50 ft) from the nearest building.

09.C.11 Installation, use, and storage outside buildings.

a. Containers shall be upright upon firm foundations or otherwise firmly secured. Flexible connections (or other special fixtures) shall be provided to protect against the possibility of the effect of settlement on the outlet piping.

b. Containers shall be in a suitable ventilated enclosure or otherwise protected against tampering.

c. Storage outside buildings, of containers awaiting use, shall be located from the nearest building or group of buildings in accordance with the following:

Quantity of LP-Gas stored	Distance
less than 227 kg (500 lb)	0 m
227 kg (500 lb) - 2730 kg (6,000 lb)	3 m (10 ft)
2730 kg (6,000 lb) - 4545 kg (10,000 lb)	6 m (20 ft)
more than 4545 kg (10,000 lb)	8 m (25 ft)

d. Storage areas shall be provided with at least one approved portable fire extinguisher rated no less than 20-B:C.

09.C.12 Use inside buildings.

a. LP-Gas shall not be stored within buildings.

b. Containers, regulating equipment, manifolds, pipe, tubing, and hose shall be located to minimize exposure to high temperatures or physical damage.

c. The maximum water capacity of individual containers shall be 110 kg (245 lbs) (nominal 45 kg (100 lbs) LP-Gas capacity).

d. Containers having a water capacity greater than 1 kg (2.5 lbs) (nominal 0.5 kg (1 lb) LP-Gas capacity) which are connected for use shall stand on a firm and substantially level surface and, when necessary, shall be secured in an upright position. Systems utilizing containers having a water capacity greater than 1 kg (2.5 lbs) shall be equipped with excess flow

valves internal either with the container valves or in the connections to the container valve outlets.

e. Regulators shall be directly connected to either the container valves or to manifolds connected to the container valves. The regulator shall be suitable for use with LP-Gas. Manifolds and fittings connecting containers to pressure regulator inlets shall be designed for at least 1725 kPa (250 psi) gauge service pressure.

f. Valves on containers having water capacity greater than 23 kg (50 lbs) (nominal 9 kg (20 lbs) LP-Gas capacity) shall be protected from damage while in use or storage

g. Hose shall be designed for a working pressure of at least 1725 kPa (250 psi) gauge. Design, construction, and performance of hose and connections shall have been suitability determined by listing by a nationally recognized testing agency. Hose length shall be as short as possible but long enough to permit compliance with spacing requirements without kinking, straining, or causing the hose to be so close to a burner as to be damaged by heat.

09.D TEMPORARY HEATING DEVICES

09.D.01 Only temporary heating devices approved by the designated authority shall be used. Each heater should have a safety data plate permanently affixed by the manufacturer. The plate shall provide requirements or recommendations for:

a. clearances from combustible materials,
b. ventilation (minimum air requirements for fuel combustion),
c. fuel type and input pressure,
d. lighting, extinguishing, and relighting,
e. electrical power supply characteristics,
f. location, moving, and handling, and
g. name and address of the manufacturer.

> if this information is not available on a data plate it shall be

in writing at the job site

09.D.02 A positive operating procedure shall be established to assure the following:

a. proper placement and servicing,
b. safe clearance from combustible material,
c. close surveillance,
d. safe fuel storage and refueling,
e. proper maintenance, and
f. ventilation and determination of gaseous contamination or oxygen deficiency.

09.D.03 Heater installation and maintenance shall be in accordance with the manufacturer's instructions.

09.D.04 Open-flame heating devices having exposed fuel below the flame are prohibited.

09.D.05 Heaters, when in use, shall be set horizontally level, unless otherwise permitted by the manufacturer's specifications.

09.D.06 Heaters unsuitable for use on wood floors shall be so marked. When such heaters are used, they shall rest on suitable heat insulating material, such as concrete of at least 2.5 cm (1 in) thickness or equivalent; the insulating material shall extend 0.6 m (2 ft) or more in all directions from the edges of the heater.

09.D.07 Heaters used near combustible tarpaulins, canvas, or similar coverings shall be located at least 3 m (10 ft) from such coverings; coverings shall be securely fastened to prevent them from igniting or upsetting the heater due to wind action.

09.D.08 Heaters shall be protected against damage.

09.D.09 Installation of temporary heating devices shall provide minimum clearances to combustible materials as specified in the following table.

Heater type	Sides	Rear	Chimney connector
room heater - circulating	30 cm	30 cm	45 cm
room heater - radiant	90 cm	90 cm	45 cm

09.D.10 Fuel combustion space heating devices used in any enclosed building, room, or structure shall be vented by a flue pipe to the exterior of the structure.

a. Fresh air shall be supplied, by natural or mechanical means, in sufficient quantities to ensure the health and safety of workers. Particular attention shall be given to areas where heat and fumes may accumulate.

b. When heaters are used in confined spaces, precautions shall be taken to ensure proper combustion, maintenance of a safe and healthful atmosphere for workers, and limitation of temperature rise in the area: these precautions shall be addressed in the confined space entry permit. ***> See Section 06.1***

c. Vent pipes shall be located a safe distance from flammables and combustibles. Where vent pipes pass through combustible walls or roofs, they shall be properly insulated and securely fastened and supported to prevent accidental displacement or separation.

09.D.11 When a heater is placed in operation, initial and periodic checks shall be made to ensure it is functioning properly.

09.D.12 Fuel combustion heater carbon monoxide hazards.

a. When heaters are used in enclosed or partially enclosed structures, tests for the presence of carbon monoxide shall be made within one hour of the start of each shift and at least every four hours (every two hours for solid fuel heaters) thereafter.

b. Carbon monoxide concentrations greater than 25 ppm (TLV)

of air volume at worker breathing levels shall require extinguishing of the heater unless additional ventilation is provided to reduce the carbon monoxide content to acceptable limits.

09.D.13 Personnel involved in fueling heaters shall be trained in, and thoroughly familiar with, the manufacturer's recommended safe fueling procedures.

09.D.14 Heaters shall be equipped with an approved automatic device to shut off the flow of fuel if the flame is extinguished (on liquid fuel heaters, barometric or gravity oil feed shall not be considered a primary safety control).

09.D.15 Spark arresters shall be provided on all smoke stacks or burning devices having forced drafts or short stacks permitting live sparks or hot materials to escape.

09.D.16 Solid fuel heaters are prohibited in buildings and on scaffolds.

09.D.17 Gas heaters - general.

a. All piping, tubing, and hose shall be leak tested - using soap suds or other noncombustible detection means (tests shall not be made with a flame) - after assembly and proven free of leaks at normal operating pressure.

b. Hose and fittings shall be protected from damage and deterioration.

c. All hose and fittings shall be checked to ensure that the type, capacity, and pressure ratings are as specified by the heater manufacturer: hose shall have a minimum working pressure or 1725 kPa (250 psi) gauge and a minimum bursting pressure of 8620 kPa (1250 psi) gauge.

d. All hose connectors shall be capable of withstanding, without leakage, a test pressure of 860 kPa (125 psi) gauge and shall be capable of withstanding a pull test of 180 kg (400 lbs).

e. Hose connectors shall be securely connected to the heater by mechanical means; neither "slip-end" connectors (connections that allow the hose end to be held only by the friction of the hose material against the metal fitting of the unit) nor ring keepers (tightened over the hose to provide an increased force holding the hose to the metal fitting) are permitted.

09.D.18 Natural gas heaters. When flexible gas supply lines are used, the length shall be as short as practical and shall not exceed 8 m (25 ft).

09.D.19 Portable LP-Gas heaters. ***> See also Section 09.C***

a. If LP-Gas is supplied to a heater by hose, the hose shall not be less than 3 m (10 ft), nor more than 8 m (25 ft), in length.

b. Heaters shall be equipped with an approved regulator in the supply line between the fuel cylinder and the heater unit. Cylinder connectors shall be provided with an excess flow valve to minimize the flow of gas in the event the fuel line ruptures.

c. LP-Gas heaters having inputs above 50,000 Btu per hour shall be equipped with either a pilot, which must be lighted and proved before the main burner can be turned on, or an electronic ignition. (These provisions do not apply to portable heaters under 7,500 Btu per hour when used with containers having a maximum water capacity of 1 kg (2.5 lbs).)

d. Container valves, connectors, regulators, manifolds, piping, and tubing shall not be used as structural support for LP-Gas heaters.

e. Heaters, other than integral heater-container units, shall be located at least 2 m (6 ft) from any LP-Gas container (this shall not prohibit the use of heaters designed specifically for attachment to the LP-Gas container or to a supporting standard, provided they are designed and installed to prevent direct or radiant heat application from the heater into the containers).

Blower and radiant type heaters shall not be directed toward any LP-Gas container within 6 m (20 ft).

f. If two or more heater-container units (of either the integral or nonintegral type) are located in an unpartitioned area of the same floor, the container or containers of each unit shall be separated from the container or containers of any other unit by at least 6 m (20 ft).

g. When heaters are connected to containers for use in an unpartitioned area on the same floor, the total water capacity of containers, manifolded together for connection to a heater(s), shall not be greater than 335 kg (735 lb) (nominal 136 kg (300 lb LP-Gas capacity). Such manifolds shall be separated by at least 6 m (20 ft).

09.D.20 Installation of heating equipment in service or lubrication areas.

a. Heating equipment installed in lubrication or service areas where there is no dispensing or transferring of flammable liquids shall be installed such that the bottom of the heating unit is at least 46 cm (18 in) above the floor and is protected from damage.

b. Heating equipment installed in lubrication or service areas where flammable liquids are dispensed shall be of a type approved for garages and shall be installed at least 2 m (8 ft) above the floor.

09.E FIRST RESPONSE FIRE PROTECTION

09.E.01 Portable fire extinguishers shall be provided where needed as specified in Table 9-1. Fire extinguishers shall be inspected and maintained as specified in NFPA 10.

09.E.02 Approved fire extinguishers.

a. Fire extinguishers shall be approved by a nationally

FIGURE 9-1

FIRE EXTINGUISHER DISTRIBUTION

	Occupancy					
	Low Hazard		Medium Hazard		High Hazard	
	Class A	Class B	Class A	Class B	Class A	Class B
Mimimum rating for single extinguisher	2-A	5-B or 10-B(1)	2-A	10-B or 20-B	4-A	40-B or 80-B (2)
Maximum coverage (floor area) per unit of A-rating	3,000 sq ft	n/a	1,500 sq ft	n/a	1,000 sq ft	n/a
Maximum floor area for extinguisher	11,250 sq ft	n/a	11,250 sq ft	n/a	11,250 sq ft	n/a
Maximum travel distance to extinguisher	75 ft	30 ft for 5-B 50 ft for 10-B	75 ft	30 ft for 10-B 50 ft for 20-B	75 ft	30 ft for 40-B 50 ft for 80-B

(1) up to three floam extinguishers of at least 2-1/2 gal capacity may be used to fulfill low hazard requirements
(2) up to three aqueous film foaming foam (AFFF) extinguisher of at least 2-1/2 gal capacity may be used to fulfill high hazard requirements

Derived from NFPA 10
In multiple-story facilities, at least one extinguisher shall be adjacent to stairways.
On construction and demolition projects, a ½ in diameter garden hose, not to exceed 100 ft in length and equipped with a nozzle, may be substituted for a 2-A rated fire extinguisher provided it is capable of discharging a minimum of 5 gal per minute with minimum hose stream range of 30 ft horizontally. The garden hose lines shall be mounted on conventional racks or reels. The number and location of hose racks or reels shall be such that at least one hose stream can be applied to all points in the area.

recognized testing laboratory and labeled to identify the listing and labeling organization and the fire test and performance standard that the fire extinguisher meets or exceeds.

b. Fire extinguishers shall be marked with their letter (class of fire) and numeric (relative extinguishing effectiveness) classification.

c. Fire extinguishers using carbon tetrachloride or chlorobromomethane extinguishing agents are prohibited.

d. Soldered or riveted shell self-generating foam or gas cartridge water-type portable extinguishers which are operated by inverting the extinguisher to rupture or initiate an uncontrollable pressure generating chemical reaction to expel the agent are prohibited.

09.E.03 Fire extinguishers shall be in a fully charged and operable condition and shall be suitably placed, distinctly marked, and readily accessible.

09.E.04 When portable fire extinguishers are provided for employee use in the workplace, the employer shall provide training (upon initial employment and at least annually thereafter) in the following:

a. general principles of fire extinguisher use and the hazards involved with incipient stage fire fighting to all employees; and
b. use of the appropriate fire fighting equipment to those employees designated in an emergency action plan to use fire fighting equipment.

09.E.05 Approved fire blankets shall be provided and kept in conspicuous and accessible locations as warranted by the operations involved.

09.E.06 No fire shall be fought where the fire is in imminent danger of contact with explosives: all persons shall be removed to a safe area and the fire area guarded against intruders.

09.E.07 Standpipe and hose system equipment.

a. Standpipes shall be located or otherwise protected against damage: damaged standpipes shall be repaired promptly.

b. Reels and cabinets used to contain fire hose shall be designed and maintained to ensure the prompt use of the hose valve, hose, and other equipment. Reels and cabinets shall be conspicuously identified and used only for fire equipment.

c. Hose outlets and connections shall be located high enough above the floor to avoid their obstruction and to be accessible to employees. To ensure hose connections are compatible with support fire equipment, screw threads shall be standardized or adapters shall be provided throughout the system.

d. Standpipe systems shall be equipped with vinyl type or lined hoses of such length that friction loss resulting from water flowing through the hose will not decrease the pressure at the nozzle below 210 kPa (30 psi). The dynamic pressure at the nozzle shall be within 210 kPa (30 psi) and 860 kPa (125 psi).

e. Standpipe hoses shall be equipped with shut-off type nozzles.

09.E.08 The following tests shall be performed on standpipe and hose systems before placing them in service:

a. piping (including yard piping) shall be hydrostatic tested for at least two hours at not less than 1380 kPa (200 psi) (or at least 350 kPa (50 psi) in excess of normal pressure when the normal pressure is greater than 1040 kPa (150 psi)); and
b. hose shall be hydrostatic tested with couplings in place at a pressure of not less than 1380 kPa (200 psi) (this pressure shall be maintained for at least 15 seconds, but not more than one minute, during which time the hose shall not leak nor shall the jacket thread break).

09.E.09 Standpipe and hose system inspection and maintenance.

a. Water supply tanks shall be kept filled to the proper level except during repairs. When pressure tanks are used, proper pressure shall be maintained at all times except during repairs.

b. Valves in the main piping connections to the automatic sources of water supply shall be kept fully open at all times except during repairs.

c. Hose systems shall be inspected at least annually and after each use to assure that all equipment is in place, available for use, and in operable condition.

d. When the system or any portion of the system is found not to be serviceable it shall be removed for repair and replaced with equivalent protection (such as fire watches and extinguisher) until the repairs are complete.

e. Hemp and linen hoses shall be unracked, physically inspected for deterioration, and reracked using a different fold pattern at least annually.

09.E.10 The minimum water supply for standpipe and hose systems provided for the use of employees shall be sufficient to provide 0.38 m^3 (100 gal) per minute for at least 30 minutes.

09.E.11 For all structures in which standpipes are required, or where standpipes exist in structures being altered, the standpipes shall be brought up as soon as practical and maintained as construction progresses so that they are always ready for fire protection use. There shall be at least one standard hose outlet at each floor.

09.F FIXED FIRE SUPPRESSION SYSTEMS

09.F.01 Fixed fire suppression systems shall be designed, installed, and acceptance-tested in accordance with requirements of the NFPA.

09.F.02 Fixed fire suppression systems shall be inspected and maintained in accordance with the applicable NFPA standards. Inspection and maintenance dates shall be recorded on the container, on a tag attached to the container, or in a central location.

09.F.03 Automatic sprinkler systems shall be protected from damage.

09.F.04 Vertical clearance of at least 46 cm (18 in) shall be maintained between the top of stored material and sprinkler deflectors.

09.F.05 If a fixed extinguishing system becomes inoperable, the employer shall notify the employees and take necessary precautions to assure their safety until the system is restored to operating order.

09.F.06 Effective safeguards shall be provided to warn employees against entry into fixed extinguishing system discharge areas where the atmosphere remains hazardous to employee safety and health. Manual operating devices shall be identified as to the hazard against which they will provide protection.

09.F.07 Warning or caution signs shall be posted at the entrance to, and inside, areas protected by fixed extinguishing systems which use agents in concentrations known to be hazardous to employee safety and health.

09.F.08 Dry chemical fixed extinguishing systems.

a. Dry chemical extinguishing agents shall be compatible with any foams or wetting agents with which they are used.

b. Dry chemical extinguishing agents of different compositions shall not be mixed together.

c. Dry chemical extinguishing systems shall be refilled with the chemical stated on the approval nameplate or an equivalent compatible material.

09.F.09 Gaseous agent fixed extinguishing systems.

a. Agents used for initial supply and replenishment shall be of a type approved for the system's application (carbon dioxide obtained by dry ice conversion to liquid is not acceptable unless it is processed to remove excess oil and water).

b. Employees shall not be exposed to toxic levels of the gaseous agent or its decomposition products.

09.F.10 When water and spray foam fixed extinguishing systems are used, the drainage of water shall be away from work areas and routes of emergency egress.

09.G FIRE FIGHTING EQUIPMENT

09.G.01 Fire fighting equipment shall be provided and installed in accordance with applicable NFPA, OSHA, and USCG regulations.

09.G.02 No fire protection equipment or device shall be made inoperative or used for other purposes, unless specifically approved by the designated authority (for Government facilities, this includes the Government's designated authority).

09.G.03 If fire hose connections are not compatible with local fire fighting equipment, adapters shall be made available.

09.H FIRE DETECTION AND EMPLOYEE FIRE ALARM SYSTEMS

09.H.01 Fire detection and employee fire alarm systems shall be designed and installed in accordance with requirements of NFPA and OSHA.

09.H.02 Fire detection systems and components shall be restored to normal operating condition as soon as possible after each test/alarm. Spare devices and components shall be maintained in sufficient quantities for the prompt restoration of the system.

09.H.03 Fire detection systems shall be maintained in operable condition except during maintenance or repairs.

a. Fire detectors and detector systems shall be tested and adjusted as often as necessary to maintain operability and reliability: factory calibrated detectors need not be adjusted after installation.

b. Pneumatic and hydraulic operated detection systems installed after January 1, 1981, shall be equipped with supervised systems.

c. The servicing, testing, and maintenance of fire detection systems shall be performed by a trained person knowledgeable in the operations and function of the system.

d. Fire detectors that need to be cleaned of dirt, dust, or other particulate matter to be fully functional shall be cleaned at regular intervals.

09.H.04 Fire detection systems and devices shall be protected from weather, corrosion, and mechanical and physical damage.

09.H.05 Fire detectors shall be supported independently of their control wiring or tubing.

09.H.06 An alarm system shall be established by the employer so that employees on the site and the local fire department can be alerted of an emergency.

09.H.07 Manually operated alarm actuation devices shall be conspicuous and accessible and inspected and maintained in operable condition.

09.H.08 The alarm shall be distinctive and recognizable as a signal to evacuate the work area or to perform actions designated in the emergency action plan.

a. The alarm shall be capable of being perceived above

ambient noise and light levels by all employees in the affected area.

b. Tactile devices may be used to alert those employees who would not otherwise be able to recognize the audible or visual alarm.

09.H.09 Employees shall be instructed in the preferred means of reporting emergencies, such as manual pull box alarms, public address systems, or telephones.

a. The alarm code and reporting instructions shall be conspicuously posted at phones and at employee entrances.

b. Reporting and evacuating instructions shall be conspicuously posted.

c. For work at installations which are equipped with radio wave fire alarm systems, a compatible fire alarm transmitter should be used at the construction site.

09.I FIRE FIGHTING ORGANIZATIONS - TRAINING AND DRILLING

09.I.01 Fire fighting organizations shall be provided to assure adequate protection to life and property. NFPA recommendations shall be used for determining type, size, and training of fire fighting organizations.

09.I.02 Fire brigade drills shall be held to assure a well-trained and efficient operating force. Records of such drills shall be maintained at the installation.

09.I.03 Demonstration and training in first aid fire fighting shall be conducted at intervals to insure that project personnel are familiar with, and capable of operating, fire fighting equipment.

09.J FIRE PATROLS

09.J.01 When watch personnel or guards are provided, they shall

make frequent rounds through buildings and storage areas when work is suspended.

09.J.02 Watch personnel or guards shall be provided where ten or more persons are quartered.

09.J.03 In any instance where combustible materials have been exposed to fire hazards (such as welding operations, hot metals, or open flame), a watcher shall be assigned to remain at the location for at least one hour after the exposure has ended.

09.K WILDFIRE CONTROL

09.K.01 At all facilities and areas with potential exposure to wildfire, a wildfire prevention plan shall be developed. The plan shall address the following items and shall be updated annually:

a. an analysis of wildfire causes and special fire hazards and risks;
b. proposed measures to reduce fire occurrence and decrease fire damage;
c. procedures for public education and fire prevention sign posting (including procedures for keeping the public informed of the current fire danger rating); and
d. provisions for cooperative efforts with all other neighboring fire protection agencies.

09.K.02 At all facilities and areas with potential exposure to wildfire, a wildfire control plan shall be developed. The plan shall address the following items, shall be distributed to all key wildfire control officers, and shall be updated at least annually:

a. the in-house wildfire control team organization and personnel roster, training and equipment requirements, and notification procedures;
b. a listing of cooperating agencies and notification procedures, (including any mutual aid agreements with adjacent fire departments and agencies);
c. a listing of additional available resources for work force, equipment, supplies, and facilities, and contracting or

procurement information;

d. an up-to-date map of the protected area which shows boundaries, roads, and other means of access, heliports, airports, water sources, special hazards, and special fire risks;

e. a listing of weather information sources;

f. procedures for public notification; and

g. pre-attack plans.

09.K.03 Wildfire control teams and operations shall be organized and conducted in accordance with the requirements of NFPA 295.

a. Wildfire control team personnel shall receive training as specified by the fire chief; as a minimum, training will include fireline safety, fire behavior, suppression methods, communications procedures, and use and care of protective and firefighting equipment.

b. Fire fighting equipment shall be maintained in working and ready condition.

c. Protective equipment, including fire helmet, leather boots, goggles, and gloves, shall be provided and maintained in working and ready condition. ***> See also Section 5***

d. Employees designated as fire fighters shall be examined, as part of their medical surveillance, by a physician and certified to be physically able to perform fire fighting duties.

e. Communication equipment shall be provided to fire fighters as necessary for coordination, control, and emergency needs.

09.K.04 Wildfire control teams shall consist of two or more qualified individuals.

DEFINITIONS

Automatic fire detection device: a device designed to automatically detect the presence of fire by heat, flame, light, smoke, or other products of combustion.

Carbon dioxide: a colorless, odorless, electrically nonconductive inert gas which acts as an extinguishing medium by reducing the concentration of oxygen or fuel vapor in the air to the point where combustion is impossible.

Class A fire: a fire involving ordinary combustible materials such as wood, paper, clothing, and some rubber and plastic materials.

Class B fire: a fire involving flammable or combustible liquids, flammable gases, greases and similar materials, and some rubber and plastic materials.

Class C fire: a fire involving energized electrical equipment where safety to the employee requires the use of electrically nonconductive extinguishing media.

Class D fire: a fire involving combustible metals such as magnesium, zirconium, sodium, and potassium.

Combustible liquid - a liquid having a flash point at or above 38° C (100° F). Combustible liquids are subdivided as follows:
€ Class II liquids have flash points at or above 38° C (100° F) and below 60° C (140° F).
€ Class IIIA liquids have flash points at or above 60° C (140° F) and below 93° C (200° F).
€ Class IIIB liquids have flash points at or above 93° C (200° F).

Container: any vessel of 0.23 m^3 (60 gal) or less capacity used for transporting or storing liquids.

Dry chemical: an extinguishing agent composed of very small particles of chemicals such as sodium bicarbonate, potassium bicarbonate, or potassium chloride supplemented by special treatment to provide resistance to packing and moisture absorption and to provide proper flow capabilities. Does not include dry powders.

Dry powder: a compound used to extinguish or control Class D fires.

Extinguisher classification: the letter classification given an extinguisher to designate the class(es) of fire on which it will be effective.

Extinguisher rating: the numerical rating given to an extinguisher which indicates the extinguishing potential of the unit.

Fixed extinguishing system: a permanently installed system that either extinguishes or controls a fire.

Flammable liquid - a liquid having a flashpoint below 38° C (100° F) and having a vapor pressure not exceeding 280 kPa (40 psia) at 38° C (100°F). Flammable liquids are also categorized as Class I liquids and further defined as follows:

Class 1A liquids have flash points below 23° C (73° F) and have boiling points below 38° C (100° F).

Class 1B liquids have flash points below 23° C (73° F) and have boiling points at or above 38° C (100° F).

Class 1C liquids have flash points at or above 23° C (73° F) and below 38° C (100° F).

Foam: a stable aggregation of small bubbles which flow freely over a burning liquid surface and form a coherent blanket which seals combustible vapors, thereby extinguishing the fire.

Gaseous agent: a fire extinguishing agent which is in the gaseous state at normal room temperature and pressure and diffuses readily to diffuse itself uniformly throughout an enclosure.

Halon: a colorless, electrically nonconductive gas which extinguishes fire by inhibiting the chemical chain reaction of fuel and oxygen. Halon 1211 is a liquefied gas, also known as bromochlorodifluromethane; halon 1301 is also known as bromotrifluoromethane.

Incipient stage fire: a fire which is in the initial or beginning stage and which can be controlled or extinguished by portable fire extinguisher, Class II standpipe, or small hose systems without the need for protective clothing or breathing apparatus.

Liquefied petroleum gas (LPG): any material which is composed predominantly of any of the following hydrocarbons (or mixtures of them): propane, propylene, butanes, and butylenes.

Local application system: a fixed fire suppression system which has a supply of extinguishing agent with nozzles arranged to automatically discharge extinguishing agent directly on the burning material to extinguish or control the fire.

Multipurpose dry chemical: a dry chemical which is approved for use on Class A, Class B, and Class C fires.

Portable tank: any closed vessel having a liquid capacity over 0.23 m^3 (60 gal) and not intended for fixed installation.

Pre-discharge employee alarm: an alarm which will sound at a set time before actual discharge of an extinguishing system so that employees may evacuate the discharge area before system discharge.

Safety can: an approved container, of not more than 19 L (5 gal) capacity, having a spring-closing lid and spout cover and designed to safety relieve internal pressures under fire exposure.

Sprinkler alarm: an approved device installed so that any discharge from a sprinkler system equal to or greater than that from a single automatic sprinkler will result in an audible signal on the premises.

Sprinkler system: a system of piping designed in accordance with fire protection engineering standards and installed to control, or extinguish fires. The system includes an adequate and reliable water supply, a network of specialty sized piping and sprinklers which are interconnected, and a control valve and device for actuating an alarm when the system is in operation.

Small hose system - a system of hose, ranging in diameter from 1.6 cm (5/8 in), which is for use by employees and provides a means for the control and extinguishment of incipient stage fires.

Standpipe system:
Class I standpipe system - a 6.4 cm (2-1/2 in) hose connection for use by fire departments and those trained in handling heavy fire streams.
Class II standpipe system - a 3.8 cm (1-1/2 in) hose system which provides a means for the control or extinguishment of incipient stage fires.
Class III standpipe system - a combined system of hose which is for use by employees trained in the use of hose operations and which is capable of furnishing effective water discharge during the more advanced stages of fire (beyond the incipient stage) in the interior of workplaces.

Storage tank: any vessel having a liquid capacity that exceeds 60 gal, is intended for fixed installation and is not used for processing.

Total flooding systems: a fixed suppression system which is arranged to automatically discharge a predetermined concentration of agent into an enclosed space for fire extinguishment or control.

SECTION 10

WELDING AND CUTTING

10.A GENERAL

10.A.01 Welders, cutters, and their supervisor shall be trained in the safe operation of their equipment, safe welding/cutting practices, and welding/cutting respiratory and fire protection.
> American Industrial Hygiene Association publication "Welding Health and Safety" is recommended

10.A.02 All welding equipment shall be inspected daily: defective equipment shall be removed from service, replaced or repaired, and reinspected before again being placed in service.

10.A.03 Electrical and pressurized system requirements.

a. Welding cylinders and their use shall meet the applicable requirements of Section 20, Pressurized Systems.

b. Arc welding and cutting systems and their use shall meet the applicable requirements of Section 11, Electrical.

10.A.04 Workers and the public shall be shielded from welding rays, flashes, sparks, molten metal, and slag.

10.A.05 Cable, hoses, and other equipment shall be kept clear of passageways, ladders, and stairways.

10.A.06 Welding and cutting of hazardous materials.

a. When welding, cutting, or heating on steel pipelines containing natural gas, 49 CFR Part 192, Welding of Steel in Pipelines, shall apply.

b. Before welding, cutting, or heating is commenced on any surface covered by a preservative coating whose flammability is not known, a test shall be made to determine its flammability: preservative coatings shall be considered highly flammable

when scrapings burn with extreme rapidity.

c. Preservative coatings shall be removed a sufficient distance from the area to be heated to ensure any temperature increase of the unstripped metal will not be appreciable: artificial cooling of the metal surrounding the heating area may be used to limit the area to be stripped.

d. When welding, cutting, or heating toxic preservative coatings in enclosed spaces, all surfaces covered with toxic preservatives shall be stripped of such coverings for a distance of at least 10 cm (4 in) from the area of heat application or the employees shall be protected by air line respirators.

e. When welding, cutting, or heating toxic preservative coatings in the open air, employees shall be protected by respirator.

10.A.07 All structural welding accomplished by the contractor or subcontractor on critical items such as scaffolding, shoring, forms, ladders, piling, etc., shall be performed by certified welders using qualified welding procedures.

10.A.08 Before heat is applied to a drum, container, or hollow structure, a vent or opening shall be provided for the release of any built-up pressure generated during the application of heat.

10.A.09 Employees performing welding, cutting, or heating shall be protected by PPE appropriate for the hazards: respiratory, vision, and skin protection required in this section shall be in compliance with applicable requirements of Section 5.

10.A.10 All welding and cutting equipment and operations shall be in accordance with standards and recommended practices of American National Standards Institute standard ANSI Z49.1.

10.B RESPIRATORY PROTECTION

10.B.01 All welding, cutting, and heating operations shall be ventilated (natural or mechanical) such that personnel exposures to hazardous concentrations of airborne contaminants are within

acceptable limits. ***> See Section 6***

10.B.02 Welding, cutting, and heating not involving conditions or materials described in this section may normally be done without mechanical ventilation or respiratory protective equipment.

10.B.03 Either general mechanical or local exhaust ventilation shall be provided whenever welding, cutting, or heating is performed in a confined space. ***> See paragraphs 10.A.06.d and 10.B.04.b***

10.B.04 Materials of toxic significance. Welding, cutting, or heating operations which involve or generate any of the substances listed below shall be performed in accordance with the following subparagraphs. ***> See also paragraphs 10.A.06.d***

Antimony Arsenic Barium Beryllium Cadmium
Chromium Cobalt Copper Lead Manganese
Mercury Nickel Ozone Selenium Silver Vanadium

a. Whenever these materials are encountered in confined spaces, local mechanical exhaust ventilation and personal respiratory protection shall be used.

b. Whenever these materials, except beryllium, are encountered in indoor operations, local mechanical exhaust ventilation shall be used: when beryllium is encountered in indoor operations, local mechanical exhaust ventilation and personal respiratory protection shall be used.

c. Whenever these materials are encountered in outdoor operations, personal respiratory protection shall be used.

10.B.05 Welding, cutting, or heating operations which involve or generate fluorine or zinc compounds shall be performed in accordance with the following.

a. In confined spaces, local mechanical exhaust ventilation or personal respiratory protection shall be used.

b. In open spaces, sampling shall be performed to determine concentrations of fluorides or zinc compounds and the need for local exhaust ventilation or personal respiratory protection.

10.B.06 Arc and gas cutting. Oxygen cutting using either an iron powder or chemical flux, gas-shielded arc cutting, and plasma cutting shall employ local mechanical exhaust ventilation or other means adequate to remove the fumes generated.

10.B.07 Other persons exposed to the same atmosphere as welders or cutters shall be protected in the same manner as welders or cutters.

10.C FIRE PROTECTION

10.C.01 Compatible fire extinguishing equipment shall be provided in the immediate vicinity of welding or cutting operations.

10.C.02 Before conducting welding or cutting operations, the area shall be surveyed to ensure it is free of the following hazards:

a. proximate combustible materials,
b. the presence or possible generation of potentially explosive atmospheres (flammable gases, vapors, liquids, or dusts), and
c. the presence or nature of an oxygen-enriched atmosphere.

10.C.03 Hierarchy of fire control. Objects to be welded, cut, or heated shall be:

a. moved to a location free of dangerous combustibles;
b. if the work cannot be moved, all moveable fire hazards in the vicinity shall be taken to a safe place (moved at least 11 m (35 ft) horizontally from the welding or cutting area) or the combustible material and construction shall be protected from the heat, sparks, and slag of welding;
c. when welding or cutting must be done in a location where combustible or flammable materials are located, inspection and written authorization by the designated authority shall be required before such operations are begun (the location shall be checked

for latent fires after the work is completed).

10.C.04 When a welding, cutting, or heating operation is such that normal fire prevention precautions are not sufficient, additional personnel shall be assigned to guard against fire and instructed in anticipated fire hazards and how fire fighting equipment is to be used.

10.C.05 When welding or cutting is to be done over combustible flooring, the flooring shall be protected by fire-resistant shielding, covered with damp sand, or kept wet: where flooring is wet or damp, personnel operating arc welding or cutting equipment shall be protected from possible shock.

10.C.06 Noncombustible barriers shall be installed below welding or burning operations in a shaft or raise.

10.C.07 Openings or cracks in walls, floors, or ducts within 11 m (35 ft) of the site shall be tightly covered to prevent the passage of sparks to adjacent areas.

10.C.08 Where welding or cutting is to be done near walls, partitions, ceiling or roof of combustible construction, fire resistant guards shall be provided to prevent ignition.

10.C.09 Where welding or cutting is to be done on a metal wall, partition, ceiling, or roof, precautions shall be taken to prevent ignition, due to heat conduction or radiation, of combustibles on the other side.

10.C.10 Welding or cutting shall not be done on a metal partition, wall, ceiling, or roof with a combustible covering nor on walls or partitions of combustible sandwich-type panel construction.

10.C.11 before welding or cutting drums, tanks, or other containers and equipment which have contained hazardous materials the containers shall be thoroughly cleaned in accordance with NFPA 327, *Cleaning or Safeguarding Small Tanks and Containers*, and ANSI/AWS F4.1, *Recommended Safe*

Practices for the Preparation for Welding and Cutting of Containers that have Held Hazardous Substances.

10.C.12 Hot tapping or other welding or cutting on a flammable gas or liquid transmission or distribution pipeline shall be performed only by personnel qualified to make hot taps and only with the permission of the designated authorities.

10.C.13 When welding or cutting is done near a sprinkler head, a wet cloth shall be used to cover the head during, and then removed at the completion of, the welding or cutting.

10.C.14 When welding or cutting in areas protected by fire detection and suppression systems, precautions shall be taken to avoid accidental initiation of these systems.

10.D OXYFUEL GAS WELDING AND CUTTING

10.D.01 Oxyfuel gas welding and cutting equipment shall be listed by a nationally recognized testing laboratory.

10.D.02 Oxygen cylinders and apparatus.

a. Oxygen cylinders and apparatus shall be kept free from oil, grease, and other flammable or explosive substances and shall not be handled with oily hands or gloves.

b. Oxygen cylinders and apparatus shall not be used interchangeably with any other gas.

10.D.03 Hose.

a. Fuel gas hose and oxygen hose shall be readily distinguishable from each other.

b. Oxygen and fuel gas hoses shall not be interchangeable; a single hose having more than one gas passage shall not be used.

c. Hose couplings of the type that can be unlocked or disconnected without a rotary motion are prohibited.

d. Hose which has been subject to flashback or which shows severe wear or damage shall be tested to twice the normal pressure to which it is subjected, and in no case less than 2100 kPa (300 psi); defective hose, or hose in doubtful condition, shall not be used.

e. When parallel runs of oxygen and fuel gas hose are taped together, not more than 10 out of every 30 cm (4 out of every 12 in) shall be covered by tape.

f. Boxes used for the storage of gas hose shall be ventilated.

g. Hose connections shall be clamped or otherwise securely fastened in a manner that will withstand, without leakage, twice the pressure to which they are normally subjected in service, but not less than 2100 kPa (300 psi).

10.D.04 Torches.

a. Torches shall be inspected, at the beginning of each working shift, for leaking shutoff valves, hose couplings, and tip connections: defective torches shall not be used.

b. Hoses shall be purged individually before lighting the torch for the first time each day: hoses shall not be purged into confined spaces or near ignition sources.

c. Clogged torch tip openings shall be cleaned with suitable cleaning wires, drills, or other devices designed for such purposes.

d. Torches shall be lighted by friction lighters or other approved devices, not by matches or from hot work.

10.D.05 Torch valves shall be closed and the gas supply shut off whenever work is suspended.

10.D.06 The torch and hose shall be removed from confined spaces whenever work is suspended.

10.D.07 Protective equipment.

a. Oxyfuel gas, and other fuel gas-oxygen, welding and cutting systems utilizing cylinder-hose-torch shall have a reverse-flow check valve, in each hose, between the torch and the regulator. (Reverse-flow check valves that are integral with the torch are acceptable.)

b. When fuel gas-oxygen systems are manifolded together the provisions of NFPA 51 shall apply.

10.D.08 Connection of multiple sets of oxyacetylene hoses to a single regulator on a single set of oxyacetylene tanks may only be accomplished by installing a commercially available fitting approved by Compressed Gas Association (CGA) standards and listed by a nationally recognized testing laboratory. The fitting shall be installed on the output side of the regulator and shall have a built-in shut-off valve and reverse-flow check valve on each branch.

10.D.09 Acetylene regulators shall not be adjusted to permit a discharge greater than 100 kPa (15 psig).

10.E ARC WELDING AND CUTTING

10.E.01 Electric welding apparatus shall be installed, maintained, and operated in accordance with the NEC.

10.E.02 Manual electrode holders.

a. Only manual electrode holders specifically designed for arc welding and cutting of a capacity capable of safety handling the maximum rated current required by the electrodes may be used.

b. All current carrying parts of the holder which are gripped by the welder or cutter, and the outer jaws of the holder, shall be

fully insulated against the maximum voltage encountered to ground.

10.E.03 Cables and connectors.

a. Cables shall be completely insulated, flexible, capable of handling the maximum current requirements of the work in progress, and in good repair.

b. Cables with splices or repaired insulation within 10 feet of the holder shall not be used.

c. Where it becomes necessary to connect or splice lengths of cable together, insulated connectors of a capacity at least equivalent to that of the cable shall be used. When connections are affected by cable lugs, they shall be securely fastened together to give good electrical contact and the exposed metal parts of the lugs shall be completely insulated.

10.E.04 The frames of arc welding and cutting machines shall be grounded either by a third wire in the cable connecting the circuit conductor or by a separate wire which is grounded at the source of the current.

10.E.05 Neither terminal of the welding generator shall be bonded to the frame of the welder.

10.E.06 Pipe lines containing gases or flammable liquids or conduits carrying electrical conductors shall not be used for a ground return circuit.

10.E.07 Circuits from welding machines used for other than welding tools shall be grounded.

10.E.08 Welding supply cables shall not be placed near power supply cables or other high-tension wires.

10.E.09 Welding leads shall not be permitted to contact metal parts support suspended scaffolds.

10.E.10 Switching equipment for shutting down the welding machine shall be provided on or near the welding machine.

10.E.11 Equipment shall be shut down when the leads are unattended.

10.E.12 Arc welding and cutting operations shall be shielded by noncombustible or flameproof screens to protect employees and other visitors from the direct rays of the arc.

10.E.13 Coiled welding cable shall be spread out before use.

10.F GAS METAL ARC WELDING

10.F.01 Chlorinated solvents shall be kept at least 61 m (200 ft), unless shielded, from the exposed arc. Surfaces prepared with chlorinated solvents shall be dry before welding is permitted on such surfaces.

10.F.02 Persons in the area not protected from the arc by screening shall be protected by filter lenses. When two or more welders are exposed to each other's arc, filter lens goggles shall be worn under welding helmets: hand shields shall be used to protect the welders against flashes and radiant energy when either the helmet is lifted or the shield is removed.

10.F.03 Welders and other persons who are exposed to radiation shall be protected so that the skin is covered to prevent burns and other damage by ultraviolet rays. Welding helmets and hand shields shall be free of leaks, openings, and highly reflective surfaces.

10.F.04 When gas metal arc welding is performed on stainless steel, persons will be protected against dangerous concentrations of nitrogen dioxide by local exhaust ventilation or air line respirators.

DEFINITIONS

Arc: a controlled electrical discharge between the electrode and

the workpiece that is formed and sustained by a gas that has been heated to such a temperature that it can conduct electric current.

Arc cutting: a thermal cutting process that severs or removes metal by melting with the heat of an arc between an electrode and the workpiece.

Arc welding: a welding process that joins workpieces by heating them with an arc.

Brazing: a welding process that joins materials by heating them to a temperature which will not melt them but will melt a filler material which adheres to them and forms a joint.

Cylinder manifold: a multiple header for interconnection of gas sources with distribution points.

Electrode: a flux coated wire rod.

Flashback: a recession of the flame into or back of the mixing chamber of the oxyfuel gas torch.

Fuel gas: a gas (e.g., acetylene, hydrogen, natural gas, propane) used with oxygen in the oxyfuel process and for heating.

Gas metal arc welding (GMAW): an arc welding process that uses an arc between a continuous filler metal electrode and the weld pool; shielding (from the atmosphere) is provided by an externally supplied gas.

Heating torch: a device for directing the heating flame produced by the controlled combustion of fuel gases.

Hot tapping: a procedure of attaching connections to equipment in service by welding and drilling.

Oxyfuel gas cutting: an oxygen cutting process that uses heat from an oxyfuel gas flame.

Oxyfuel gas welding: a welding process that joins workpieces by heating them with an oxyfuel gas flame.

Soldering: a welding process that joins materials by heating them to a temperature which will not melt them but will melt a filler material which adheres to them and forms a joint.

SECTION 11

ELECTRICAL

11.A GENERAL

11.A.01 Approval and qualification.

a. All electrical wiring and equipment shall be a type listed by a nationally recognized testing laboratory for the specific application for which it is to be used.

b. All electrical work shall comply with applicable National Electrical Safety Code (NESC), NEC, and USCG regulations.

c. All work shall be performed by qualified personnel familiar with applicable code requirements.

11.A.02 Isolation.

a. Before work is begun, the person in charge shall ascertain by inquiry, by direct observation, or by instruments, whether any part of an electric power circuit - exposed or concealed - is located such that the performance of work could bring any person, tool, or machine into physical or electrical contact with it.

b. Whenever possible, all equipment and circuits to be worked on shall be deenergized before work is started and personnel protected by clearance procedures and grounding.

c. Live parts of wiring or equipment shall be guarded to protect all persons or objects from harm.

d. Transformer banks and high voltage equipment shall be protected from unauthorized access; entrances not under constant observation shall be kept locked; metallic enclosures shall be grounded; and signs warning of high voltage and prohibiting unauthorized entrance shall be posted at entrances.

e. Enclosure gates or doors shall swing outward or provide clearance from installed equipment.

11.A.03 Flexible cords.

a. Flexible cord sets used on construction sites or in damp locations shall contain the number of conductors required for the service plus an equipment ground wire: the cords shall be hard usage or extra hard usage as specified in Table 11-1.

b. Electric wire and flexible cord passing through work areas shall be protected from damage (including that caused by foot traffic, vehicles, sharp corners, protections, and pinching); flexible cords and cables passing through holes shall be protected by bushings or fittings.

c. Flexible cord shall be used only in continuous lengths without splice or tap, except hard service flexible cords No. 12 or larger with molded or vulcanized splices may be used if the splices are made by a qualified electrician, the insulation is equal to the cable being spliced, and wire connections are soldered.

d. Patched, oil-soaked, worn, or frayed electric cords or cables shall not be used.

e. Extension cords or cables shall not be secured with staples, hung from nails, or suspended by bare wire.

11.A.04 When it is necessary to work on energized lines or equipment, rubber gloves and other protective equipment or hotline tools meeting the provisions of American National Standards Institute and American Society for Testing and Materials standards shall be used. ***> See Section 05.H***

11.A.05 In the following situations, at least two persons shall be assigned to work together - one person, trained to recognize dangerously close to live conductors or perform other unsafe acts electrical hazards, shall be delegated to watch the movements of

TABLE 11-1

FLEXIBLE CORD AND CABLE USAGE

Trade name: Thermoset-jacketed heat resistant cord
Type letter: AFS Usage: portable heaters, damp locations, extra-hard usage
Type letter: AFSJ Usage: portable heaters, damp locations, hard usage
Trade name: Portable power cable
Type letter: G, W Usage: portable extra-hard usage
Trade name: Thermoset jacketed hard cord
Type letter: HS, HSO Usage: portable or portable heaters, damp locations, extra hard usage
Type letter: HSJ, HSJO Usage: portable or portable heaters, damp locations, hard usage
Trade name: hard service cord
Type letter: S, SE, SEO, SO, SOO, ST, STO, STOO Usage: pendant or portable, damp locations, extra-hard usage
Trade name: junior hard service cord
Type letter: SJ, SJE, SJEO, SJO, SJOO, SJT, SJTO, SJTOO Usage: pendant or portable, damp locations, hard usage

the others doing the work so that he/she can warn them if they get dangerously close to live conductors or perform other unsafe acts and so he/she can assist in case of an accident:

a. work on energized overhead lines,
b. work at substations/power plants where wiring is congested,
c. work at remote or isolated locations,
d. work at night or during inclement weather, or
e. work involving handling energized conductors or apparatus.

11.A.06 Switch boxes, receptacle boxes, metal cabinets, enclosures around equipment, and temporary power lines shall be marked to indicate the maximum operating voltage.

11.A.07 Insulation mats or platforms of substantial construction and providing good footing shall be placed on floors and on the frames of equipment having exposed live parts so that the operator or persons in the vicinity cannot touch such parts unless standing on the mats, platforms, or insulated floors.

11.A.08 Suitable barriers or other means shall be provided to ensure that work space for electrical equipment cannot be used as a passageway when energized parts of electrical equipment are exposed.

11.A.09 When fuses are installed or removed with one or both terminals energized, special tools insulated for the voltage shall be used.

11.A.10 Attachment plugs and receptacles.

a. Plugs and receptacles shall be kept out of water unless of an approved submersible type.

b. Attachment plugs for use in work areas shall be constructed so that they will endure rough use and shall be equipped with a cord grip to prevent strain on the terminal screws.

c. Attachment plugs and other connectors supplying equipment equipment at more than 300 volts shall be skirted or otherwise designed so that arcs will be confined.

d. When a National Electrical Manufacturers Association (NEMA) standard configuration exists for a particular voltage, amperage, frequency, or type of current, the NEMA standard plug and receptacle shall be used.

11.A.11 Portable handlamps.

a. Portable handlamps shall be of molded composition or another type approved for the purpose.

b. Metal-shell, paper-lined lampholders shall not be used.

c. Handlamps shall be equipped with a handle and with a substantial guard over the bulb and attached to the lampholder or the handle.

11.A.12 Equipment or circuits that are deenergized shall be rendered inoperative and have tags attached at all points where such equipment or circuits can be energized: a safe clearance procedure shall be established. ***> See Section 12***

11.B OVERCURRENT PROTECTION, DISCONNECTS, AND SWITCHES

11.B.01 All circuits shall be protected against overload.

a. Overcurrent protection shall be based on the current-carrying capacity of the conductors supplied and the power load being used.

b. No overcurrent device shall be placed in any permanently grounded conductor except where the overcurrent device simultaneously opens all conductors of the circuit or where the device is required by Section 430 of the NEC for motor

overload protection.

c. Overcurrent protection devices must be readily accessible, clearly labeled, not exposed to physical damage, not placed in the vicinity of easily ignitable materials, and located or shielded such that their operation will not expose employees to injury due to arching or the sudden movement of parts.

d. Circuit breakers shall clearly indicate whether they are in the open (deenergized) or closed (energized) position.

e. Fuse cabinets shall have close-fitting doors which can be locked.

11.B.02 Disconnects.

a. Disconnecting means shall be located or shielded so that persons will not be injured when the disconnect is operated.

b. Disconnecting boxes shall be securely fastened to the surface and fitted with covers.

11.B.03 Switches.

a. A readily accessible, manually-operated switch shall be provided for each incoming service or supply circuit.

b. Switches shall be of the inclosed safety type, with inclosures grounded, and installed to minimize the danger of accidental operation.

11.B.04 Switches, fuses, and automatic circuit breakers shall be marked, labeled, or arranged for ready identification of the circuits or equipment which they supply.

11.B.05 Switches, circuit breakers, fuse panels, and motor controllers located out-of-doors or in wet locations shall be in a weatherproof enclosure or cabinet.

11.C GROUNDING

11.C.01 All electrical circuits shall be grounded in accordance with the NEC and the NESC unless otherwise noted in this manual.

a. A ground shall be provided for noncurrent carrying metallic parts of such equipment as generators (if not exempted by NEC 250-6), electrically powered arc welders, switches, motor controller cases, fuse boxes, distribution cabinets, frames, noncurrent carrying rails used for travel and motors of electrically operated cranes, electric elevators, metal frames of nonelectric elevators to which electric conductors are attached, other electric equipment, and metal enclosures around electric equipment. ***> See Table 11-2 for NEC 250-6 exemptions***

b. Portable and semi-portable electrical tools and equipment shall be grounded by a multiconductor cord having an identified grounding conductor and a multi contact polarized plug-in receptacle.

c. Semi-portable equipment, floodlights, and work lights shall be grounded: the protective ground should be maintained during moving unless supply circuits are deenergized.

d. Tools protected by an approved system of double insulation, or its equivalent, need not be grounded: double insulated tools shall be distinctly marked and listed by a nationally recognized testing laboratory.

11.C.02 Grounding rod and pipe electrodes.

a. Electrodes of rod or pipe shall be free from non-conducting coatings and, if practicable, shall be embedded below permanent moisture levels.

b. Grounding rod and pipe electrodes shall be in unbroken 2.4 m (8 ft) lengths and driven to full depth: where rock bottom

is encountered, the electrode shall be driven at an angle not to exceed 45° from the vertical or shall be buried in a trench that is at least 0.75 m (2.5 ft) deep.

c. A single electrode which does not have a resistance to ground of 25 ohms or less, shall be augmented by one additional electrode spaced no closer than 1.8 m (6 ft) to the first electrode.

d. Electrodes of rods of iron or steel shall be at least 1.6 cm (5/8 in) diameter; nonferrous rods, or their equivalent, shall be listed by a nationally recognized testing laboratory and shall be at least 1.3 cm (0.5 in) diameter.

e. Electrodes of pipe or conduit shall be at least 1.9 cm (3/4 in) trade size; pipes and conduit of iron or steel shall have the outer surface galvanized or otherwise metal-coated for corrosion control.

f. Grounding electrode systems of permanent facilities shall be in accordance with NEC 250.

11.C.03 Conductors used for bonding or grounding stationary and movable equipment shall be of ample size to carry the anticipated current.

a. When attaching bonding and grounding clamps or clips, a secure and positive metal-to-metal contact shall be made.

b. The ground end shall be attached first; the equipment end shall be attached and removed by insulated tools or other suitable devices.

c. When removing grounds, the grounding device shall be removed from the line or equipment first, using insulated tools or other suitable devices.

d. Bonding and grounding attachments shall be made before

TABLE 11-2

EXEMPTIONS FOR GROUNDING PORTABLE AND VEHICLE-MOUNTED GENERATORS (FROM NEC 250-6)

Portable generators. Under the following conditions the frame of a portable generator is not required to be grounded and shall be permitted to serve as the grounding electrode for a system supplied by the generator.

1. the generator supplies only equipment mounted on the generator and/or cord- and plug-connected equipment connected through receptacles mounted on the generator, and
2. the noncurrent carrying metal parts of equipment and the equipment grounding conductor terminals of the receptacles are bonded to the generator frame.

Vehicle-mounted generators. Under the following conditions the frame of a vehicle is permitted to serve as the grounding electrode for a system supplied by a generator located on the vehicle (all conditions must be satisfied).

1. the frame of the generator is bonded to the vehicle frame,
2. the generator supplies only equipment located on the vehicle and/or cord- and plug-connected equipment through receptacles mounted on the vehicle or on the generator,
3. the noncurrent carrying metal parts of equipment and the equipment grounding conductor terminals of the receptacles are bonded to the generator frame, and
4. the system complies with all other NEC grounding requirements.

Neutral conductor bonding. A neutral conductor shall be bonded to the generator frame when the generator is a component of a separately derived system; the bonding of any conductor other than a neutral within the generator to its frame shall not be required.

systems are activated and shall not be broken until after systems are deactivated.

11.C.04 Grounding circuits shall be checked to ensure that the circuit between the ground and a grounded power conductor has a resistance low enough to permit sufficient current flow to allow the fuse or circuit breaker to interrupt the current.

11.C.05 All receptacle outlets that provide temporary electrical power during construction, remodeling, maintenance, repair, or demolition, shall have ground-fault circuit-interrupter (GFCI) protection for personnel. GFCI protection shall be provided on all circuits serving portable electric hand tools or semi-portable electric power tools (such as block/brick saws, table saws, air compressors, welding machines, and drill presses).

a. The GFCI device shall be calibrated to trip within the threshold values of 5 ma +/- 1 ma as specified in Underwriters Laboratory (UL) Standard 943.

b. Receptacle outlets that are not part of the permanent wiring of the building or structure shall be GFCI protected by one of the following means:

(1) a receptacle outlet with integral GFCI protection;
(2) a standard receptacle outlet connected downstream of a receptacle outlet with integral GFCI protection; or
(3) receptacles protected by a GFCI-type circuit breaker.

c. Receptacle outlets that are part of the permanent wiring of the building or structure (including portable generators) shall use a portable GFCI device if the receptacle outlets are not already GFCI protected. The portable GFCI device shall be as near as practicable to the receptacle outlet.

d. Electric tool circuits that are “hard-wired” directly to an electrical source of power shall be GFCI protected by a

GFCI-type circuit breaker.

e. GFCIs shall be installed in accordance with the NEC; the permanent wiring shall consist of electrical circuits grounded in accordance with the NEC.

f. GFCIs may be sensitive to some equipment (such as concrete vibrators): in these instances, on an exception basis an assured equipment grounding conductor program in accordance with Appendix D is acceptable in lieu of GFCIs if the exception is documented on an activity hazard analysis and documents (1) the conditions, or need, for the exception, and (2) implementation of the requirements of the assured equipment grounding conductor program.

g. For generators meeting the grounding exemptions of NEC 250-6, the above GFCI requirements are generally not applicable.

11.D TEMPORARY WIRING AND LIGHTING

11.D.01 A sketch of proposed temporary power distribution systems shall be submitted to the designated authority and accepted for use before temporary power is installed: the sketch shall indicate the location, voltages, and means of protection of all circuits, including receptacles, disconnecting means, grounding, GFCIs, and lighting circuits.

11.D.02 Testing.

a. Temporary electrical distribution systems and devices shall be checked and found acceptable for polarity, ground continuity, and ground resistance before initial use and before use after modification.

b. Ground resistance and circuits shall be measured at the time of installation and shall comply with 11.C.02 and 11.C.04: the measurement shall be recorded and a copy furnished to the

designated authority.

11.D.03 The vertical clearance of temporary wiring for circuits carrying 600 volts or less shall be:

a. 3 m (10 ft) above finished grade, sidewalks, or from any platform;
b. 3.6 m (12 ft) over areas subject to vehicular traffic other than truck traffic;
c. 5.4 m (18 ft) over public streets, alleys, roads, and driveways;
d. 4.5 m (15 ft) over areas other than those specified in 11.D.03c that are subject to truck traffic.

11.D.04 Wet locations.

a. Where a receptacle is used in a wet location it shall be contained in a weatherproof enclosure, the integrity of which is not affected when an attachment plug is inserted.

b. All temporary lighting strings in outdoor or wet locations (such as tunnels, culverts, valve pits, floating plant, etc.) shall consist of lamp sockets and connection plugs permanently molded to the hard service cord insulation.

11.D.05 Wires shall be insulated from their supports.

11.D.06 Temporary lighting.

a. Bulbs attached to temporary lighting strings and extension cords shall be protected by guards unless the bulbs are deeply recessed in a reflector.

b. Temporary lights shall not be suspended by their electric wire unless cord and lights are designed for this suspension.

c. Exposed empty light sockets and broken bulbs shall not be permitted.

d. Portable electric lighting used in confined wet and/or other conductive locations, as for example, drums, tanks, and vessels shall be operated at 12 volts or less. ***> See also Section 11.G; for additional information see Article 410, Lighting Fixtures, Lampholders, Lamps, and Receptacles of the NEC***

11.D.07 When temporary wiring is used in tanks or other confined spaces, an approved switch, identified and marked, shall be provided at or near the entrance to such spaces for cutting off the current in emergencies.

11.D.08 Nonmetallic sheathed cable may be used as allowed by the NEC and as follows:

a. along studs, joists or similar supports closely following the building finish or running boards when 2 m (7 ft - 8 in) or more above the floor;
b. when firmly attached to each cabinet, box fitting or fixture by means of a cable clamp.

Nonmetallic sheathed cable may not be used where precluded by the NEC nor as portable extension cords, lying on the ground subject to any type of traffic, where subject to frequent flexing, or as service entrance cable.

11.D.09 Temporary lighting circuits shall be separate from electric tool circuits. Receptacle circuits shall be dedicated to either temporary lighting or electric tools and shall be labeled "**LIGHTS ONLY**" or "**TOOLS ONLY**" as applicable.

11.E OPERATIONS ADJACENT TO OVERHEAD LINES

11.E.01 Overhead transmission and distribution lines shall be carried on towers and poles which provide safe clearances over roadways and structures.

a. Clearances shall be adequate for the movement of vehicles and for the operation of construction equipment.

b. All electric power or distribution lines shall be placed underground in areas where there is extensive use of equipment having the capability to encroach on the clear distances specified in 11.E.04.

c. Protection of outdoor trolleys and portable cables rated above 600 volts for supplying power to moveable construction equipment such as gantry cranes, mobile cranes, shovels, etc., shall conform to NESC.

11.E.02 Work activity adjacent to overhead lines shall not be initiated until a survey has been made to ascertain the safe clearance from energized lines. ***> See 11.A.02***

11.E.03 Any overhead wire shall be considered energized unless the person owning such line or operating officials of the electrical utility supplying the line assures that it is not energized and it has been visibly grounded.

11.E.04 Operations adjacent to overhead lines are prohibited unless at least one of the following conditions is satisfied:

a. power has been shut off and positive means taken to prevent the lines from being energized,
b. equipment, or any part, does not have the capability of coming within the minimum clearance from energized overhead lines as specified in Table 11-3, or the equipment has been positioned and blocked to assure no part, including cables, can come within the minimum clearances as specified in Table 11-3; a notice of the minimum required clearance has been posted at the operator's position (electric line derrick trucks and aerial lifts are not required to comply with this requirement), or
c. in transit with the boom lowered and no load, the equipment clearance is at least 1.2 m (4 ft) for voltages less than 50 kV, 3 m (10 ft) for voltages of 50 kV or greater up to and including 345 kV, and 4.8 m (16 ft) for voltages above 345 kV.

11.E.05 Work activity which could affect or be affected by

TABLE 11-3

MINIMUM CLEARANCE FROM ENERGIZED OVERHEAD ELECTRIC LINES

Nominal system voltage	Minimum rated clearance
0 to 50 kV	3 m
51 to 200kV	4.5 m
201 to 300 kV	6 m
301 to 500 kV	7.5 m
501 to 750 kV	105 m
751 to 1000 kV	135 m

overhead lines shall not be initiated until coordinated with the appropriate utility officials.

11.E.06 Floating plant and associated equipment shall not be sited or placed within 6 m (20 ft) of overhead transmission or distribution lines.

11.E.07 Cage boom guards, insulating links, or proximity warning devices may be used on cranes, but such devices shall not alter the requirements of any other regulation of this part - even if such device is required by law or other regulation: insulating links shall be capable of withstanding a 1-minute dry low frequency dielectric test of 50,000 volts, alternating current.

11.E.08 Induced currents.

a. Before work near transmitter towers where there is potential for an electrical charge to be induced in equipment or materials, the transmitter shall be deenergized or tests shall be conducted to determine if an electrical charge could be induced.

b. The following precautions shall be taken to dissipate induced voltages:

(1) the equipment shall be provided with an electrical ground to the upper rotating structure supporting the boom, and
(2) ground jumper cables shall be attached to materials being handled by boom equipment when electrical charge could be induced while working near energized transmitters; crews shall be provided with nonconductive poles having large alligator clips or other similar protection to attach the ground cable to the load and insulating gloves will be used.

11.F BATTERIES AND BATTERY CHARGING

11.F.01 Batteries of the nonsealed type shall be stored in enclosures with outside vents or in well ventilated rooms and be so arranged as to prevent the escape of fumes, gases, or electrolyte spray into other areas.

11.F.02 Ventilation shall be provided to ensure diffusion of battery gases to prevent the accumulation of an explosive mixture.

11.F.03 Battery storage and handling.

a. Racks and trays shall be substantial and shall be treated to make them resistant to the electrolyte.

b. Floors shall be of acid resistant construction or protected from accumulation of acid.

c. Facilities for quick drenching of the eyes and body shall be provided for emergency use within 7.5 m (25 ft) of battery handling areas; PPE shall be used as prescribed in Section 5.

d. Facilities shall be provided for flushing and neutralizing spilled electrolyte and for fire protection.

11.F.04 Battery charging.

a. Battery charging installations shall be located in areas designated for that purpose.

b. Charging apparatus shall be protected from mechanical damage.

c. When charging batteries, the vent caps shall be kept in place to avoid spray of electrolyte: care shall be taken to assure vent caps are functioning.

11.G HAZARDOUS (CLASSIFIED) LOCATIONS

11.G.01 Locations of electrical equipment and wiring shall be classified on the properties of the flammable vapors, liquids or gases, or combustible dusts or fibers which may be present therein and the likelihood that a flammable or combustible concentration or quantity is present: in classifying locations, each room, section, or area shall be classified on an individual basis in accordance with the definitions given in Table 11-4.

11.G.02 All equipment, wiring methods, and installations of equipment in hazardous (classified) locations shall be either approved as intrinsically safe, approved for the hazardous location, or demonstrated to be safe for the location.

11.G.03 Equipment and wiring approved as intrinsically safe shall be permitted in those hazardous (classified) locations included in its labeling or listing.

11.G.04 Equipment and wiring approved for the hazardous (classified) location shall be approved not only for the class of location but also for the ignitible or combustion properties of the specific gas, vapor, dust, or fiber that will be present.

a. This equipment shall not be used unless it is marked to show the class, group, and operating temperature or temperature range for which it is approved.

b. With the following exceptions, the temperature marking shall not exceed the ignition temperature of the specific gas, vapor, dust, or fiber:

TABLE 11-4

HAZARDOUS (CLASSIFIED) LOCATIONS

Class I Highly flammable gases or vapors		Class II Combustible dusts		Class III Combustible fibers or flyings	
Division 1	Division 2	Division 1	Division 2	Division 1	Division 2

(1) Equipment of the nonheat producing type (e.g., junction boxes and conduit) and equipment of the heat producing type having a maximum temperature of not more than 100° C (212° F) need not have a marked operating temperature or temperature range.

(2) Fixed lighting fixtures marked for use only in Class I, Division 2 locations need not be marked to indicate the group.

(3) Fixed general purpose equipment in Class I locations, other than lighting fixtures, which is acceptable for use in Class II, Division 2, and Class III locations need not be marked with the class, group, division, or operating temperature.

(4) Fixed dust-tight equipment, other than lighting fixtures, which is acceptable for use in Class II, Division 2, and Class III locations need not be marked with the class, group, division, or operating temperature.

11.G.05 Equipment which is safe for the hazardous (classified) location shall be of a type and design which will provide protection from the hazards arising from the combustibility and flammability of vapors, liquids, gases, dusts, or fibers.

11.G.06 Equipment approved for a specific hazardous location shall not be installed or intermixed with equipment approved for another specific hazardous location.

11.G.07 All wiring components and utilization equipment required to be explosion proof (vapor, dust, or fiber tight) shall be maintained in that condition.

a. There shall be no loose or missing screws, gaskets, threaded connections, or other impairments to this tight condition.

b. Conduits shall be threaded and made wrench-tight: where it is impractical to make a threaded joint tight, a bonding jumper shall be used.

11.H POWER TRANSMISSION AND DISTRIBUTION

11.H.01 The requirements in this subsection and the pertinent requirements in the other subsections of this manual shall apply to the erection of new electric transmission and distribution lines and equipment, and the alteration, conversion, and improvement of existing electric transmission and distribution lines and equipment.

11.H.02 Before starting work, existing conditions shall be determined by an inspection or a test. Such conditions shall include, but not be limited to, location and voltage of energized lines and equipment, conditions of poles, and the location of circuits and equipment including power and communication lines and fire alarm circuits.

a. Electric equipment and lines shall be considered energized until determined to be deenergized by tests, or other means, and grounds applied.

b. New lines or equipment may be considered deenergized and worked as such where the lines or equipment are grounded or where the hazard of induced voltages is not present and adequate clearances or other means are implemented to prevent contact with energized lines or equipment.

c. Bare wire communication conductors on power poles or structures shall be treated as energized lines unless protected by insulating materials suitable for the highest voltage which may be accidentally applied to the line.

d. The operating voltage of equipment and lines shall be determined before working on or near energized parts.

11.H.03 Clearance requirements of either subparagraph a or b below shall be observed.

a. No employee shall be permitted to approach or take any

conductive object without an approved insulating handle closer to exposed energized parts than shown in Table 11-5 (phase to ground) unless:

(1) the employee is insulated or guarded from the energized part (gloves or gloves with sleeves rated for the voltage involved shall be considered insulation of the employee from the energized part),
(2) the energized part is insulated or guarded from the employee and any other conductive object at a different potential, or
(3) the employee is isolated, insulated, or guarded from any other conductive object(s), as during live-line bare-hand work.

b. The minimum phase to ground working distance and minimum clear hot stick distances in Table 11-5 shall not be violated. The minimum clear hot stick distance refers to the distance from the hot end of live-line tools to the lineman when performing live-line work. Conductor support tools (such as link sticks, strain carriers, and insulator cradles) may be used provided the clear length of insulation is at least as long as the insulator string or as long as the minimum phase to ground distance in Table 11-5.

11.H.04 When deenergizing lines and equipment operated in excess of 600 volts, and the means of disconnecting from electric energy is not visibly open or visibly locked out, provisions a-g below are required.

a. The section of line or equipment to be deenergized shall be clearly identified and shall be isolated from all sources of voltage.

b. Notification and assurance from the designated official shall be obtained that:

(1) all switches and disconnectors through which electric energy may be supplied to the particular section of line or equipment to

be worked have been deenergized,
(2) all switches and disconnectors are plainly tagged indicating that persons are at work, and
(3) all switches and disconnectors capable of being rendered inoperable are rendered inoperable.

c. After all designated switches and disconnectors have been opened, rendered inoperable, and tagged, visual inspections

TABLE 11-5

ALTERNATING CURRENT - MINIMUM DISTANCES

Voltage range (phase-to-phase)	Minimum working and clear hot stick distance	
	(phase-to-ground)	(phase-to-phase)
2.1 - 15 kV	0.6 m	0.6 m
15.1 - 35 kV	0.7 m	0.7 m
35.1 - 46 kV	0.8 m	0.8 m
46.1 - 72.5 kV	0.9 m	0.9 m
72.6 - 121 kV	1.0 m	1.4 m
138 - 145 kV	1.1 m	1.5 m
161 - 169 kV	1.1 m	1.7 m
230 - 242 kV	1.5 m	2.5 m
345 - 362 kV	2.1 m*	4.0 m*
500 - 552 kV	3.3 m*	6.0 m*
700 - 765 kV	3.6 m*	9.3 m*

* for 345-362 kV, 500-552 kV, and 700-765 kV, the minimum working distance and the minimum clear hot stick distance may be reduced provided such distances are not less than the shortest distance between the energized part and a grounded surface.

shall be conducted to insure that equipment or lines are deenergized.

d. Protective grounds shall be applied on the disconnected lines or equipment to be worked on.

e. Guards or barriers shall be erected as necessary to adjacent energized lines.

f. When more than one independent crew requires the same or equipment to be deenergized, a prominent tag for each such independent crew shall be placed on the line or equipment by the designated employee in charge.

g. Upon completion of work on deenergized lines or equipment, each designated person in charge shall determine that all employees in the crew are clear and that protective grounds installed by the crew have been removed and shall report to the designated authority that all tags and locks protecting the crew may be removed.

11.H.05 When opening or closing a disconnect switch or circuit breaker on a power transmission/distribution line exposure to potential explosion shall be limited; safe operating procedures shall be established to minimize the risk of explosion.

11.H.06 When a crew working on a line or equipment can clearly see that the means of disconnecting from electrical energy are visibly open or visibly locked-out, the following provisions are required.

a. Guards or barriers shall be erected as necessary to adjacent energized lines.

b. Upon completion of work on deenergized lines or equipment, each designated person in charge shall determine that all employees in the crew are clear that all protective grounds installed by the crew have been removed and shall

report to the designated authority that all tags and locks protecting the crew may be removed.

11.H.07 Grounding.

a. Deenergized conductors and equipment which are to be grounded shall be tested for voltage: results of this voltage test shall determine the subsequent procedures required in 11.I.04-05.

b. When attaching grounds, the ground end shall be attached first, and the other end shall be attached and removed by insulated tools or other suitable devices.

c. When removing grounds, the grounding device shall first be removed from the line or equipment using insulating tools or other suitable devices.

d. Grounds shall be placed between the work location and all sources of energy and as close as practicable to the work location, or grounds shall be placed at the work location.

(1) If work is to be performed at more than one location in a line section, the line section must be grounded and short circuited at one location in the line section and the conductor to be worked on shall be grounded at each work location.

(2) The minimum distance in Table 11-5 shall be maintained from ungrounded conductors at the work location.

(3) Where the making of a ground is impracticable, or the conditions resulting from it would be more hazardous than working on the lines or equipment without grounding, the grounds may be omitted and the line or equipment worked as energized.

e. Grounds may be temporarily removed only when necessary for test purposes and extreme caution shall be exercised during

the test procedures: the lines or equipment from which grounds have been removed shall be considered energized.

f. When grounding electrodes are used, such electrodes shall have a resistance to ground low enough to remove the danger of harm to personnel or permit prompt operation of protective devices.

g. Grounding to tower shall be made with a tower clamp capable of conducting the anticipated fault current.

h. A ground lead, to be attached to either a tower ground or driven ground, shall be capable of conducting the anticipated fault current and shall have a minimum conductance of No. 2 AWG copper.

11.H.08 All hydraulic fluids used for the insulated sections of derricks, trucks, aerial lifts, and hydraulic tools which are used on or around energized lines and equipment shall be of the insulating type (the requirements for fire resistant fluids do not apply to hydraulic tools covered by this requirement).

11.H.09 Tools.

a. All hydraulic tools which are used on or around energized lines or equipment shall use nonconducting hoses having adequate strength for the normal operating pressures.

b. All pneumatic tools which are used on or around energized lines or equipment shall have nonconducting hoses of adequate strength for the normal operating pressures and have an accumulator on the compressor to collect moisture.

c. Portable metal or conductive ladders shall not be used near energized lines or equipment except in specialized work such as in high voltage substations where nonconductive ladders might present a greater hazard than conductive ladders. Conductive or metal ladders shall be prominently marked as conductive and

all precautions shall be taken when used in specialized work.

d. Measuring tapes or measuring ropes which are metal or contain conductive strands shall not be used when working on or near energized parts.

11.H.10 Aerial lift trucks. ***> See also Sections 18 and 22.K***

a. When working near energized lines or equipment, aerial lift trucks shall be grounded or barricaded and considered as energized equipment, or the aerial lift truck shall be insulated for the work being performed.

b. Equipment or material shall not be passed between a pole or structure and an aerial lift while an employee working from the basket is within reaching distance of energized conductors or equipment that are not covered with insulating protective equipment.

11.H.11 With the exception of equipment certified for work on the proper voltage, mechanical equipment shall not be operated closer to any energized line or equipment than the clearances in Table 11-5 unless:

a. an insulated barrier is installed between the energized part and the mechanical equipment,
b. the mechanical equipment is grounded,
c. the mechanical equipment is insulated, or
d. the mechanical equipment is considered as energized.

11.H.12 Material handling and storage.

a. When hauling poles during the hours of darkness, illuminated warning devices shall be attached to the trailing end of the longest pole.

b. Materials and equipment shall not be stored under energized bus, energized lines, or near energized equipment if it is

possible to store them elsewhere. If materials or equipment must be stored under energized lines or near energized equipment, clearance shall be maintained as in Table 11-5 and extraordinary caution shall be exercised in maintaining these clearances when operating equipment or moving materials near such energized equipment.

c. Tag lines shall be of a nonconducting type when used near energized lines.

11.H.13 Before climbing poles, ladders, scaffolds, or other elevated structures, an inspection shall determine that the structures are capable of sustaining the additional or unbalanced stresses to which they will be subjected. Poles or structures which may be unsafe for climbing shall not be climbed until made safe by guying, bracing, or other means.

11.H.14 Before installing or removing wire or cable, action will be taken as necessary to prevent the failure of poles and other structures.

11.H.15 When setting, moving, or removing poles by cranes, derricks, gin poles, A-frames, or other mechanized equipment near energized lines or equipment, precautions shall be taken to avoid contact with energized lines or equipment, except in barehand, live-line work, or where barriers or protective devices are used.

11.H.16 Unless using protective equipment for the voltage involved, employees standing on the ground shall avoid contacting equipment or machinery working adjacently to energized lines or equipment.

11.H.17 Lifting equipment shall be bonded to an effective ground or it shall be considered energized and barricaded when used near energized equipment or lines.

11.H.18 Pole holes shall not be left unattended or unguarded.

11.H.19 Where necessary to assure the stability of mobile equipment, the location shall be graded and leveled.

11.H.20 When employees are working at two or more levels on a tower, activities shall be conducted such that there is a minimum exposure of employees to falling objects.

11.H.21 Guy lines shall be used to maintain sections or parts of tower sections in position and to reduce the possibility of tipping.

11.H.22 Tower members and sections being assembled shall be adequately supported.

11.H.23 No one shall be permitted under a tower which is in the process of erection or assembly, except as may be required to guide and secure the section being set.

11.H.24 When erecting towers using hoisting equipment adjacent to energized transmission lines, the lines shall be deenergized when practical: if the lines are not deenergized, minimum clearance distances shall be maintained as specified in Table 11-5 and extraordinary caution shall be exercised in maintaining these clearances when operating equipment or moving materials near such energized equipment.

11.H.25 The load line shall not be detached from a tower section until the section is adequately secured.

11.H.26 Except during emergency restoration procedures, tower erection shall be discontinued in high wind or other adverse weather conditions which could make the work hazardous: when work is conducted under such conditions, the activity hazard analysis and the means for their control shall be delineated in an activity hazard analysis.

11.H.27 Before stringing operations a briefing shall be held to discuss the following:

a. the plan of operation,
b. the type of equipment to be used,
c. grounding devices and procedures to be followed,
d. crossover methods to be employed, and
e. clearance authorizations which are required.

11.H.28 When there is a possibility of a deenergized conductor being installed or removed coming into accidental contact with an energized circuit or receiving a dangerous induced voltage buildup, the conductor being installed or removed shall be grounded or provisions made to insulate or isolate the employee.

11.H.29 If an existing line is deenergized, proper clearance authorization shall be secured and the line grounded on both sides of the crossover or the wire being strung or removed shall be considered and worked as energized.

11.H.30 When crossing over energized conductors in excess of 600 volts, ropes, nets or guard structures shall be installed unless provision is made to isolate or insulate the worker or the energized conductor. Where practical the automatic reclosing feature of the circuit interrupting device shall be made inoperative; in addition, the line being strung shall be grounded on either side of the crossover or considered and worked as energized.

11.H.31 Conductors being strung or removed shall be kept under positive control by tension reels, guard structures, tielines, or other means to prevent accidental contact with energized circuits.

11.H.32 Guard structure members shall be sound, of adequate dimension and strength, and adequately supported.

11.H.33 Catch-off anchors, rigging, and hoists shall be of ample capacity to prevent loss of the lines.

11.H.34 Reel handling equipment, including pulling and braking machines, shall have ample capacity, operate smoothly, and be leveled and aligned in accordance with the manufacturer's operating instructions.

11.H.35 The manufacturer's load rating shall not be exceeded for stringing lines, pulling lines, sock connections, and all load-bearing hardware and accessories.

11.H.36 Pulling lines and accessories shall be inspected regularly and replaced or repaired when damaged or when dependability may be doubtful.

11.H.37 Conductor grips shall not be used on wire rope unless designed for this application.

11.H.38 Employees shall not be permitted under overhead operations or on crossarms while a conductor or pulling line is being pulled (in motion).

11.H.39 A transmission clipping crew shall have a minimum of two structures clipped between the crew and the conductor being sagged. When working on bare conductors, clipping and tying crews shall work between grounds at all times; the grounds shall remain intact until the conductors are clipped in, except on dead end structures.

11.H.40 Except during emergency restoration procedures, work from structures shall be discontinued when adverse weather (such as high wind or ice on structures) makes the work hazardous. Stringing and clipping operations shall be discontinued during an electrical storm in the vicinity.

11.H.41 Reliable communications between the reel tender and pulling rig operator shall be provided.

11.H.42 Each pull shall be snubbed or dead ended at both ends before subsequent pulls.

11.H.43 Before stringing parallel to an existing energized transmission line, a competent determination shall be made to ascertain whether dangerous induced voltage buildups will occur, particularly during switching and ground fault conditions. When

there is a possibility that such dangerous induced voltage may exist, the employer shall comply with the provisions of 11.H.43 through 11.H.50 in addition to the provisions of 11.H.26 through 11.H.41 unless the line is worked as energized.

11.H.44 When stringing adjacent to energized lines, the tension stringing method or other methods which preclude unintentional contact between the lines being pulled and any person shall be used.

11.H.45 All pulling and tensioning equipment shall be isolated, insulated, or grounded.

11.H.46 A ground shall be installed between the tensioning reel setup and the first structure to ground each bare conductor, subconductor, and overhead ground conductor during stringing operations.

11.H.47 During stringing operations, each bare conductor, subconductor, and overhead ground conductor shall be grounded at the first tower adjacent to both the tensioning and pulling setup and in increments so that no point is more than 3.2 km (2 mi) from a ground.

a. The grounds shall be left in place until conductor installation is complete.

b. Such grounds shall be removed as the last phase of aerial cleanup.

c. Except moveable-type grounds, the grounds shall be placed and removed with a hot stick.

11.H.48 Conductors, subconductors, and overhead ground conductors shall be grounded at all dead-end or catch-off points.

11.H.49 A ground shall be located at each side and within 3 m (10 ft) of working areas where conductors, subconductors, or

overhead ground conductors are being spliced at ground level. The two ends to be spliced shall be bonded to each other. Splicing should be carried out on either an insulated platform or a conductive metallic grounding mat bonded to both grounds. The grounding mat should be roped off and an insulated walkway provided for access to the mat.

11.H.50 All conductors, subconductors, and overhead ground conductors shall be bonded to any isolated tower where it may be necessary to complete work on the transmission line.

a. Work on dead-end towers shall require grounding on all deenergized lines.

b. Grounds may be removed as soon as the work is completed provided the line is not left open-circuited at the isolated tower at which work is being completed.

11.H.51 When performing work from the structure, clipping crews and all others working on conductors, subconductors, or overhead ground conductors shall be protected by individual grounds installed at every work station.

11.H.52 Before using the live-line bare-hand technique on energized high-voltage conductors or parts, a check shall be made of:

a. the voltage rating of the circuit on which the work is to be performed,
b. the clearances to ground of lines and other energized parts of which work is to be performed, and
c. the voltage limitations of the aerial-lift equipment intended to be used.

11.H.53 Only tools and equipment designed, tested, and intended for live-line bare-hand work shall be used, and such tools and equipment shall be kept clean and dry.

11.H.54 All work shall be personally supervised by a person trained and qualified to perform live-line bare-hand work.

11.H.55 The automatic reclosing feature of circuit interrupting devices shall be made inoperative where practical before working on any energized line or equipment.

11.H.56 Work shall not be performed during electrical storms or when electrical storms are imminent.

11.H.57 A conductive bucket liner or other suitable conductive device shall be provided for bonding the insulated aerial device to the energized line or equipment.

a. The employee shall be connected to the bucket liner by conductive shoes, leg clips, or other suitable means; climbers shall not be worn while performing work from an aerial lift.

b. Where necessary, electrostatic shielding for the voltage being worked or conductive clothing shall be provided.

11.H.58 Before the boom is elevated, the outriggers on the aerial truck shall be extended and adjusted to stabilize the truck. The body of the truck shall be bonded to an effective ground or barricaded and considered as energized equipment.

11.H.59 Before moving an aerial lift into the work position, all controls (ground level and bucket) shall be checked and tested to determine that they are in proper working condition.

11.H.60 Electrical insulating components and systems of aerial devices which are rated and used as an insulating device shall be, after a thorough inspection of their condition and cleanliness, tested for compliance with their rating.

a. Tests shall be conducted in accordance with the manufacturer's recommendations.

b. Tests shall be conducted only by qualified persons who are knowledgeable of the hazards.

11.H.61 All aerial lifts to be used for live-line bare-hand work shall have dual controls (ground level and basket).

a. The basket controls shall be within easy reach of the employee in the basket: if a two-basket lift is used, access to the controls shall be within easy reach from either basket.

b. The ground level controls shall be located near the base of the boom and will permit override operation of equipment at any time.

c. Except in case of an emergency, ground level lift control shall not be operated unless permission has been obtained from the employee in the lift.

11.H.62 Before an employee contacts the energized part to be worked on, the conductive bucket liner shall be bonded to the energized conductor by a positive connection which shall remain attached to the energized conductor until the work on the energized circuit is completed.

11.H.63 The minimum clearances for live-line bare-hand work shall be as specified in Table 11-5.

a. These minimum clearances shall be maintained from all grounded objects and from lines and equipment at a different potential than that to which the insulated aerial device is bonded unless such grounded objects or other lines and equipment are covered by insulated guards.

b. These distances shall be maintained when approaching, leaving, and when bonded to the energized circuit.

c. When approaching, leaving, or bonding to an energized circuit, the minimum distances in Table 11-5 shall be maintained

among all parts of the insulated boom assembly and any grounded parts (including the lower arm or portions of the truck).

d. When positioning the bucket alongside an energized bushing or insulator string, the minimum line-to-ground clearances of Table 11-5 must be maintained among all parts of the bucket and the grounded end of the bushing or insulator string.

e. A minimum clearance table (as in Table 11-5) shall be printed on a plate of durable nonconductive material and mounted in the bucket or in its vicinity so as to be visible to the boom operator.

f. Only insulated measuring sticks shall be used to verify clearance distances.

11.H.64 Handlines between buckets, booms, and the ground are prohibited.

a. No conductive materials more than 0.9 m (36 in) long shall be placed in the bucket, except for appropriate length jumpers, armor rods, and tools.

b. Nonconductive handlines may be used from line to ground when not supported from the bucket.

11.H.65 The bucket and boom shall not be over stressed by attempting to lift or support weights in excess of the manufacturer's rating.

11.I UNDERGROUND ELECTRICAL INSTALLATIONS

11.I.01 Guarding underground openings.

a. Warning signs and rigid barricades shall be promptly placed when covers of manholes, handholes, or vaults are removed.

b. When an employee enters an underground opening the opening shall be protected with a barricade, temporary cover, or other guard appropriate for the hazard.

c. Underground opening guards and warning signs shall be lighted at night.

11.I.02 Maintenance holes and unvented vaults shall be treated as, and subjected to the requirements of, confined spaces. ***> See Section 06.I***

11.I.03 Smoking shall be prohibited in maintenance holes and vaults.

11.I.04 When open flames must be used in manholes, extra precautions shall be taken to provide ventilation.

11.I.05 Before using open flames in maintenance holes or vaults, the holes/vaults shall be tested and found safe or cleared of any combustible gases or liquids.

11.I.06 When underground facilities are exposed (electric, gas, water, telephone, etc., or cables other than the one being worked on) they shall be protected to avoid damage.

11.I.07 Before cutting into a cable or opening a splice, the cable shall be identified and verified to be the proper cable and deenergized.

11.I.08 When working on buried cable or on cable in manholes, metallic sheath continuity shall be maintained by bonding across the opening or by equivalent means.

11.J WORK IN ENERGIZED SUBSTATIONS

11.J.01 When working in an energized substation, authorization shall be obtained from the designated person before work is begun.

11.J.02 When work is to be done in an energized substation, the following shall be determined:

a. what facilities are energized, and
b. what protective equipment and precautions are necessary for the safety of personnel.

11.J.03 Extraordinary caution shall be exercised in the handling of busbars, tower steel, materials, and equipment near energized facilities: the requirements in 11.H.03 shall be followed.

11.J.04 Work on or adjacent to energized control panels shall be performed by qualified employees.

11.J.05 Precautions shall be taken to prevent accidental operation of relays or other protective devices due to jarring, vibration, or improper wiring.

11.J.06 Use of vehicles, gin poles, cranes, and other equipment in unguarded high voltage equipment areas shall at all times be controlled by qualified employees.

11.J.07 All mobile cranes and derricks shall be effectively grounded when being moved or operated near energized lines or equipment or the equipment shall be considered energized.

11.J.08 When a substation fence must be expanded or removed, a temporary fence affording similar protection, when the site is unattended, shall be provided. Adequate interconnection with ground shall be maintained between temporary fence and permanent fence.

11.J.09 All gates to all unattended substations shall be locked except when work is in progress.

11.J.10 When switching gang switches, visual inspection should be made to insure all insulators and the switch handle ground are

in good condition. Insulating gloves must be worn when operating switch handles.

11.K COMMUNICATION FACILITIES

11.K.01 Employees shall not look into an open waveguide or antenna which is connected to an energized electromagnetic source.

11.K.02 If the electromagnetic radiation level within an accessible area exceeds the levels given in Section 06.F, the area shall be posted with appropriate signs.

11.K.03 When an employee works in an area where the electromagnetic radiation could exceed the levels given in Section 06.F, measures shall be taken which ensure that the employee's exposure is not greater than that permitted.

DEFINITIONS

Automatic circuit recloser: a self-controlled device for automatically interrupting and reclosing an alternate current circuit with a predetermined sequence of opening and reclosing followed by resetting, hold closed, or lockout operation.

Barricade: a physical obstruction, such as tape, screens, or cones, intended to warn of and limit access to a hazardous area.

Barrier: a physical obstruction which is intended to prevent contact with energized lines or equipment.

Bond: an electrical connection from one conductive element to another to minimize potential differences or providing suitable conductivity for fault current or for mitigation of leakage current and electrolytic action.

Bushing: an insulating device or lining used to protect a conductor where it passes through an aperture.

Cable: a conductor with insulation, or a stranded conductor with or without insulation and other coverings (single-conductor cable), or a combination of conductors insulated from one another (multiple-conductor cable).

Cable sheath: a protective covering applied to cables.

Circuit: a conductor or system of conductors through which an electric current is intended to flow.

Conductor: a material, usually in the form of a wire, cable, or bus bar, suitable for carrying an electric current.

Conductor shielding: an envelope which encloses the conductor of a cable and provides an equipotential surface in contact with the cable insulation.

Current-carrying part: a conducting part intended to be connected in an electric circuit to a source of voltage; non-current-carrying parts are those not intended to be so connected.

Effectively grounded: intentionally connected to earth through a ground connection or connections of sufficiently low impedance and having sufficient current-carrying capacity to prevent the buildup of voltages which may result in undue hazard to connected equipment or to persons.

Electric supply lines: those conductors used to transmit electrical energy and the necessary supporting or containing structures.

Ground: (reference) - that conductive body, usually earth, to which an electric potential is referenced; (as a noun) - a conductive connection whether incidental or accidental, by which an electric circuit or equipment is connected to reference ground; (as a verb) - the connecting or establishing of a connection, whether by intention or accident, of an electric circuit or equipment to reference ground.

Grounded conductor: a system or circuit conductor which is intentionally grounded.

Grounded system: a system of conductors in which at least one conductor or point (usually the middle wire or neutral point of a transformer or generator windings) is intentionally grounded, either solidly or through a current limiting device (not a current-interrupting device).

Grounding electrode (ground electrode): a conductor embedded in the earth, use for maintaining ground potential on conductors connected to it, and for dissipating into the earth current connected to it.

Grounding electrode conductor (grounding conductor): a conductor used to connect equipment or the grounded circuit of a wiring system to a grounding electrode.

Ground fault circuit interrupter: a device used to interrupt the electric circuit to the load when a fault current to ground exceeds some predetermined value that is less than that required to operate the overcurrent protection device of the supply circuit.

Hazardous (classified) locations: see table in section II.G

High voltage: 600 volts or greater.

Hotline tools and ropes: those tools and ropes which are especially designed for work on energized high voltage lines and equipment; insulated aerial equipment especially designed for work on energized high voltage lines and equipment shall be considered hot line.

Induced current: the generation of a current in a conductor caused by its proximity to a second alternating current source, a moving direct current source (such as a motor), or an extraneous voltage source (such as lightning).

Intrinsically safe equipment and associated wiring: equipment and associated wiring in which any spark or thermal effect, produced either normally or in a specified fault condition, is incapable, under certain prescribed test conditions, of causing ignition of a mixture of flammable or combustible material in air in its most easily ignitible concentration.

Live-line bare-hand work: work that is performed bare-handed from an insulated aerial platform, with the linemen in the basket at the same potential as the live conductor on which they are working.

Location:
damp location: partially protected locations under canopies, marquees, roofed open porches, and like locations, and interior locations subject to moderate degrees of moisture, such as some basements and some cold-storage warehouses.
dry location: a location not normally subject to dampness or wetness; a location classified as dry may be temporarily subject to dampness or wetness, as in the case of a building under construction.
wet location: installations underground or in concrete slabs or masonry in direct contact with the earth and locations subject to saturation with water or other liquids, such as vehicle washing basins, and locations exposed to weather and unprotected.

Low voltage: less than 600 volts.

Maintenance hole: a surface enclosure which personnel may enter which is used for installing, operating, and maintaining equipment and cable.

Metal-clad cable (MC): a factory assembly of one or more conductors, each individually insulated and enclosed in a metallic sheath of interlocking tape or a smooth or corrugated tube.

Nonmetallic-sheathed cable: a factory assembly of two or more insulated conductors having an outer sheath of moisture-resistant,

flame-retardant, nonmetallic material.

Open conductors: wires that are run as separate conductors, in contrast to wires run through conduit, cables, or raceways.

Portable electric tools: electric equipment intended to be moved from one place to another.

Premises wiring: the interior and exterior wiring, including power, lighting, control, and signal circuit wiring with all of the associated hardware, fittings, and wiring devices, both permanently and temporarily installed, which extend from the load-end of the service lateral conductors to the outlets.

Separately derived system: a premises wiring system whose power is derived from generator, transformer, or converter winding and has no direct electrical connection, including a solidly connected grounded circuit conductor, to supply conductors originating in another system.

Service: the conductors and equipment for delivering energy from the electrical supply system to the wiring system of the premises served.

Voltage: the effective (RMS) potential difference between any two conductors or between a conductor and ground. Voltages are expressed in nominal values. The nominal voltage of a system or circuit is the value assigned to a system or circuit of a given voltage class for convenient designation.

Voltage-to-ground: for grounded circuits, the voltage between the given conductors and that point or conductor of the circuit that is grounded; for ungrounded circuits, the greatest voltage between the given conductor and any other conductor of the circuit.

SECTION 12

CONTROL OF HAZARDOUS ENERGY (LOCKOUT/TAGOUT)

12.A GENERAL

12.A.01 Before an employee performs any servicing or maintenance on a system where the unexpected energizing, start up, or release of kinetic or stored energy could occur and cause injury or damage, the system shall be isolated in accordance with the requirements of this section: personnel and resources shall not be considered protected until hazardous energy control procedures have been implemented. ***> USACE employees shall comply with ER 385-1-31***

12.A.02 Coordination.

a. All control activities shall be coordinated with and approved by the designated authority.

b. When contractors are planning the use of hazardous energy control procedures they shall submit their hazardous energy control plan to the Corps' designated authority for acceptance. Implementation of hazardous energy control procedures shall not be initiated until the hazardous energy control plan has been accepted by the Corps. ***> See 12.A.07***

c. Corps and contractor designated authorities shall fully coordinate their control activities with one another throughout the planning and implementation of these activities. Each shall inform the other of their energy control procedures, ensure that their own personnel understand and comply with rules and restrictions of the procedures, and ensure that their employees affected by the hazardous energy control activity are notified when the procedural steps outlined in the hazardous energy control plan are to be initiated.

12.A.03 A preparatory inspection with USACE and contractor

personnel shall be conducted to ensure that all affected employees understand the energy hazards and the procedures for their control.

a. When energy control procedures affect both Corps and contractor(s), all Corps and contractor affected employees will participate in the preparatory inspection.

b. The preparatory meeting shall be documented: the time and date of the meeting, the subject matter discussed, and the name of all employees in attendance shall be recorded.

12.A.04 Lockout and tagout shall be performed only by authorized employees.

12.A.05 All employees affected by the lockout or tagout shall be notified, before and upon completion of, the application and removal of lockout or tagout devices.

12.A.06 Lockout and tagout devices.

a. Systems with energy isolating devices which are capable of being locked out shall use locking devices to control hazardous energy unless the designated authority (Corps or contractor) has demonstrated and documented all of the following:

(1) the use of locking devices would entail burdens that exceed any advantage to the use of lockout over the use of tagout devices,
(2) the use of tagout devices will provide full personnel protection (as defined in this section), and
(3) all affected employees can and will be informed that tagout is being used in lieu of lockout.

b. If an energy isolating device is not capable of being locked out, the hazardous energy control procedures shall utilize tagout providing full personnel protection, as follows:

(1) all tagout requirements of this regulation and of the hazardous energy control procedures shall be complied with,
(2) the tagout device shall be attached to the same location, if possible, that the lockout device would have been attached; if this is not possible then the tag shall be attached as close as safely possible to the device and in a position that will be immediately obvious to anyone attempting to operate the device, and
(3) additional means (e.g., placement of the tag in a manner which inhibits operation of the energy isolating device, removal of an isolating circuit mechanism, blocking of a control switch, opening of an extra disconnecting device, removal of a valve handle to reduce the likelihood of inadvertent energization, etc.) shall be employed to provide a level of protection commensurate to that provided by a lockout device.

12.A.07 Hazardous energy control plan.

a. Hazardous energy control procedures shall be developed in a hazardous energy control plan.

b. The plan shall clearly and specifically outline the scope, purpose, authorization, rules, and techniques to be used for the control of hazardous energy, including, but not limited to, the following:

(1) a statement of the intended use of the procedure;
(2) means of coordinating and communicating hazardous energy control activities;
(3) procedural steps and responsibilities for shutting down, isolating, blocking, and securing systems to control hazardous energy;
(4) procedural steps and responsibilities for the placement, removal, and transfer of lockout and tagout devices;
(5) procedural steps and responsibilities for placing and tagging, and moving or removing and untagging, protective grounds;
(6) requirements for testing the system to verify the effectiveness of isolation and lockout and tagout devices;
(7) a description of any emergencies which may occur during

system lockout or tagout and procedures for safely responding to those emergencies;

(8) requirements when authority for removal of hazardous energy control devices must be transferred from the authorized employee to another individual, and the names of the individuals qualified for receiving such transfer; and

(9) the means to enforce compliance with the procedures.

12.B TRAINING

12.B.01 Training shall be provided to ensure that the purpose and function of the hazardous energy control procedures are understood by employees and that employees possess the knowledge and skills required for the safe application, usage, and removal of energy controls.

a. Each authorized employee shall receive training in the recognition of hazardous energy sources, the type and magnitude of energy available in the workplace, and the methods and means for energy isolation and control.

b. Each affected employee shall be instructed in the purpose and use of the energy control procedures.

c. All incidental personnel shall be informed of the procedures and prohibitions relating to restarting or reenergizing systems which are locked or tagged out.

d. When tagout systems are used, employees shall be trained in the limitations of tags.

12.B.02 Employees shall be retrained in hazardous energy control procedures whenever:

a. there is a change in their job assignments, a change in systems or processes that present a new energy control hazard, or a change in energy control procedures, or

b. periodic inspection reveals, or there is reason to suspect the

presence of, inadequacies in or deviations from the employee's knowledge or use of energy control procedures.

12.B.03 The supervisor shall certify and document all training and retraining: certification shall contain such information as the names of employees trained, the time, date, and location of training, the name of the trainer, etc.

12.C PERIODIC INSPECTIONS

12.C.01 Daily inspections shall be conducted to ensure that all requirements of the hazardous energy control procedures are being followed.

12.C.02 Inspections shall be documented and specify the system (location) where the energy control procedures were inspected, the date of the inspection, the names of employees performing and included in the inspections, and any deficiencies in complying with the hazardous energy control procedures.

12.D LOCKOUT AND TAGOUT DEVICES

12.D.01 Lockout and tagout devices shall:

a. be capable of withstanding the environment to which they are exposed for the maximum period of time the exposure is expected, and

b. indicate the identity of the employee applying the device.

12.D.02 Lockout devices shall, in addition to the requirements of 12.D.01, be substantial enough to prevent removal without the use of excessive force or unusual techniques (such as with the use of bolt cutters).

12.D.03 Tagout devices shall, in addition to the requirements of 12.D.01, meet all of the following requirements:

a. have a standardized (within a project) print and format;

b. be constructed and printed so that exposure to weather conditions, wet or damp locations, or corrosive environments will not cause the tag to deteriorate or the message to become illegible;

c. be attached by means which are

(1) nonreusable,

(2) substantial enough to prevent inadvertent or accidental removal,

(3) attachable by hand,

(4) self-locking,

(5) nonreleasable, with a minimum unlocking strength of no less than 23 kg (50 lbs), and

(6) have the basic characteristics of being at least equivalent to a one-piece, all-environment-tolerant nylon cable tie; and

d. warn against the hazardous condition resulting from system energization and include a legend such as "**DO NOT START,**" "**DO NOT OPEN,**" "**DO NOT CLOSE,**" "**DO NOT ENERGIZE,**" "**DO NOT OPERATE**," etc.

12.E APPLYING AND REMOVING LOCKOUT AND TAGOUT DEVICES

12.E.01 The authorized employee shall ensure that all energy isolating devices needed to control energy to, or within, the system are identified and that system is shut down, isolated, blocked, and secured in accordance with the hazardous energy control procedure.

12.E.02 Any system operated by a remotely controlled source will be completely isolated such that it cannot be operated by that or any other source.

12.E.03 The authorized employee shall affix lockout and/or tagout devices to each energy isolating device in accordance with the hazardous energy control procedure.

a. Lockout devices shall be affixed to each energy isolating device in a manner that will maintain the energy isolating device

in the safe position.

b. Tagout devices shall be affixed in such a manner as will clearly indicate that the operation of movement of energy isolating devices from the safe position is prohibited.

12.E.04 In areas not under strict control of personnel involved with the hazardous energy control activities, and in areas with public access, padlocks or other positive controls must be installed on the isolation devices along with the appropriate tags.

12.E.05 Following the application of lockout or tagout devices to energy isolating devices, all potentially hazardous stored or residual energy shall be relieved, disconnected, restrained, discharged, or otherwise rendered safe.

a. Protective grounds shall be identified with safe clearance tags.

b. The authorized employee is responsible for ensuring the control of residual energy and for placing and tagging and removing or moving protective grounds in accordance with the requirements specified in the hazardous energy control procedures.

12.E.06 When there is a possibility of reaccumulation of stored energy to a hazardous level, verification of isolation shall be continued until the energy control procedure is complete.

12.E.07 Before starting work on systems which have been locked out or tagged out, the authorized employee shall verify that isolation and deenergization of the system have successfully been accomplished.

12.E.08 When tagout devices are used, employees shall be instructed in the following requirements and limitations of tags.

a. Tags must be legible and understood by all authorized and

affected employees and incidental personnel.

b. Tags and their means of attachment must be made of materials which will withstand the environments encountered in the workplace.

c. Tags shall be securely attached to energy isolating devices so that they cannot become inadvertently or accidentally detached during use.

d. Tags shall not be removed without authorization of the authorized employee and shall never be bypassed, ignored, or otherwise defeated.

e. Tags are essentially warning devices affixed to energy isolating devices and do not provide the physical protection that is provided by a lock; tags may evoke a false sense of security.

12.E.09 Before lockout or tagout devices are removed and energy restored to the system, the authorized employee shall ensure that following actions have been taken:

a. the work area has been inspected and all nonessential items (e.g., tools and materials) have been removed from the system, the system components are operationally intact, and all employees have been safely positioned or removed from the area; and

b. all affected employees have been notified that the lockout or tagout devices are about to be removed.

12.E.10 With the exception of the following conditions, each lockout and/or tagout device shall be removed from each energy isolating device by the authorized employee who applied the device. When this employee is not available, the device(s) may be removed by another individual appointed by, and under the direction of, the designated authority (Corps or contractor, as appropriate) provided that the following procedures are complied with:

a. the designated authority ensures that the individual appointed to remove lockout and/or tagout devices is knowledgeable of the scope and procedures of the safe clearance;

b. this individual and the requirements for transferring removal authority to him from the authorized individual are listed in the hazardous energy control plan;

c. verification by the designated authority that the authorized employee who applied the device is not at the facility;

d. the designated authority makes all reasonable efforts to contact the authorized employee to inform him that the lockout and/or tagout devices are to be removed; and

e. the authorized employee is informed that the lockout and/or tagout devices have been removed before their resuming work at the facility.

DEFINITIONS

Affected employee: a person whose position requires him to operate or use a system which is under lockout or tagout or whose position requires him to work in an area where a system which is under lockout or tagout is being serviced or maintained.

Authorized employee: a qualified person who is designated, in writing by the designated authority, to request, receive, implement and remove energy control procedures.

Electrical equipment: any device that produces, consumes, stores, transmits, or converts electrical energy.

Electrical line: any conductor used in the transmission of electrical energy from one point to another.

Energy control procedure: the overall written procedure (including responsibilities, procedural steps for lockout and tagout, and requirements for testing the effectiveness of energy control measures) to be used for the control of hazardous energy.

Energy isolation device: a physical device that prevents the transmission or release of energy. Includes, but is not limited to, manually operated circuit breakers, disconnect switches, slide gates, slip blinds, line valves, blocks, or similar devices, capable of blocking or isolating energy, with a position indicator. The term does not include push buttons, selector switches, and other control circuit type devices.

Energy source: includes electrical, mechanical, hydraulic, pneumatic, chemical, thermal, nuclear, stored, or other energy.

Full personnel protection: when a tagout device is used in place of a lockout device, full personnel protection is provided when (1) the tagout device is attached at the same location as the lockout device would have been attached, (2) all tagout-related requirements of this Section have been complied with, and (3) additional means have been taken to provide a level of safety commensurate with that of a lockout device. Such additional means include the removal of an isolating circuit element, blocking of a control switch, opening and tagging an extra (separated by distance) disconnecting device, or the removal of a valve handle to reduce the likelihood of energization.

Hazardous energy control plan: the written plan which clearly and specifically identifies the hazardous energy sources and outlines the scope, purpose, responsibilities, and procedural steps for lockout and tagout and the requirements for testing the effectiveness of energy control measures to be used for the control of hazardous energy from stated sources.

Incidental employee: an employee who, under normal circumstances, would not be in an area where a system is under lockout and tagout but is required to enter or pass through such an area.

Isolation: an activity which physically prevents the transmission or release of energy.

Lockout: a form of hazardous energy control utilizing the placement of a lockout device, in accordance with established procedures, on an energy isolating device to ensure that the energy isolating device and the system being controlled cannot be operated until the lockout device is removed.

Lockout device: a device that uses a positive means, such as a key or combination lock, to hold an energy isolating device in the safe position and prevent the energizing of a system.

Pressure systems: all pipe, tubing, valves, controls, and other devices which operate or are maintained above atmospheric pressure. ***> See definition of vacuum systems***

Stored energy: energy (electrical, mechanical, or chemical) that might be found in a charge capacitor, a loaded spring, chemical solutions, or other similar hazardous form.

System: includes machinery, equipment, and electrical, hydraulic, and pneumatic lines and their subsystems.

Tagout: a form of hazardous energy control procedure utilizing the placement of a tagout device, in accordance with established procedures, on an energy isolating device to indicate that the energy isolating device and the system being controlled may not be operated until the tagout device is removed.

Tagout device: a prominent warning device, such as a tag with a means of attachment, which can be securely attached to an energy isolating device in accordance with established procedures to indicate that the energy isolating device and system being controlled may not be operated until the tagout device is removed.

Vacuum systems: all pipe, tanks, tubing, valves, controls, and other devices which operate or are maintained below atmospheric pressure.

SECTION 13

HAND AND POWER TOOLS

13.A GENERAL

13.A.01 Power tools shall be of a manufacture listed by a nationally recognized testing laboratory for the specific application for which they are to be used.

13.A.02 Use, inspection, and maintenance.

a. Hand and power tools shall be used, inspected, and maintained in accordance with the manufacturer's instructions and recommendations and shall be used only for the purpose for which designed. A copy of the manufacturer's instructions and recommendations shall be maintained with the tools.

b. Hand and power tools shall be inspected, tested, and determined to be in safe operating condition before use: continued periodic inspections shall be made to assure safe operating condition and proper maintenance.

c. Hand and power tools shall be in good repair and with all required safety devices installed and properly adjusted: tools having defects that will impair their strength or render them unsafe shall be removed from service.

13.A.03 Guarding.

a. Power tools designed to accommodate guards shall be equipped with such guards.

b. Reciprocating, rotating, and moving parts of equipment shall be guarded if exposed to contact by employees or otherwise create a hazard.

13.A.04 When work is being performed overhead, tools not in use

shall be secured or placed in holders.

13.A.05 Throwing tools or materials from one location to another or from one person to another, or dropping them to lower levels, shall not be permitted.

13.A.06 Only nonsparking tools shall be used in locations where sources of ignition may cause a fire or explosion.

13.A.07 Tools requiring heat treating or redressing shall be tempered, formed, dressed, and sharpened by personnel who are experienced in these operations.

13.A.08 The use of cranks on hand-powered winches or hoists is prohibited unless the hoists or winches are provided with positive self-locking dogs: hand wheels with projecting spokes, pins, or knobs shall not be used.

13.A.09 Hydraulic fluid used in powered tools shall retain its operating characteristics at the most extreme temperatures to which it will be exposed. ***> For underground use, see 26.D.07***

13.A.10 Manufacturers' safe operating pressures for hydraulic hoses, valves, pipes, filters and other fittings shall not be exceeded.

13.A.11 All hydraulic or pneumatic tools which are used on or around energized lines or equipment shall have nonconducting hoses of adequate strength for the normal operating pressures.

13.A.12 When fuel-powered tools are used in enclosed spaces, the requirements for concentrations of toxic gases and use of personal protective equipment, as outlined in sections 5 and 6 of this manual, shall apply.

13.A.13 Clothing.

a. PPE shall be used as outlined in Section 6 of this manual.

b. Loose and frayed clothing, loose long hair, dangling jewelry (including dangling rings, chains, and wrist watches) shall not be worn while working with any power tool.

13.A.14 See Section 11.C for grounding requirements.

13.B GRINDING AND ABRASIVE MACHINERY

13.B.01 With the exception of the following, abrasive wheels shall be used only on machines provided with safety guards: ***> see ANSI B74.2 for descriptions of abrasive wheel types***

a. wheels used for internal work while within the work being ground;
b. mounted wheels, 5 cm (2 in) and smaller in diameter, used in portable operations;
c. types 16, 17, 18, 18R, and 19 cones and plugs and threaded hole pot balls where the work offers protection or where the size does not exceed 7.5 cm (3 in) in diameter by 12.5 cm (5 in) long;
d. type 1 wheels not larger than 5 cm (2 in) in diameter and not more than 1.25 cm (0.5 in) thick, operated at peripheral speeds less than 9 surface-m/s (1800 surface-ft/min) when mounted in mandrels driven by portable drills;
e. type 1 reinforced wheels not more than 7.5 cm (3 in) in diameter and 0.6 cm (0.25 in) in thickness, operating at peripheral speeds not exceeding 48 surface-m/s (9500 surface-ft/min), if safety glasses and face shield protection are worn.

13.B.02 Tongue guards on hand held power grinders shall be adjustable to within 0.6 cm (1/4 in) of the constantly decreasing diameter of the wheel at the upper opening.

13.B.03 Grinding machines shall be supplied with power sufficient to maintain the spindle speed at safe levels under all conditions of normal operation.

13.B.04 Work or tool rests shall not be adjusted while the grinding wheel is in motion.

13.B.05 Tool rests on power grinders shall not be more than 0.3 cm (1/8 in) distance from the wheel.

13.B.06 All abrasive wheels shall be closely inspected and ring-tested before mounting: cracked or damaged grinding wheels shall be destroyed.

13.B.07 Grinding wheels shall not be operated in excess of their rated safe speed.

13.B.08 Floor stand and bench-mounted abrasive wheels used for external grinding shall be provided with safety guards (protective hoods).

a. The maximum angular exposure of the grinding wheel periphery and sides shall be not more than 90°, except that when work requires contact with the wheel below the horizontal plane of the spindle the angular exposure shall not exceed 125°; in either case, the exposure shall begin not more than 65° above the horizontal plane of the spindle.

b. Safety guards shall be strong enough to withstand the effect of a bursting wheel.

13.C POWER SAWS AND WOODWORKING MACHINERY

13.C.01 Guarding.

a. Circular saws shall be equipped with guards that automatically and completely enclose the cutting edges, splitters, and antikickback devices.

b. All portable power-driven circular saws shall be equipped with guards above and below the base plate or shoe. The upper and lower guards shall cover the saw to the depth of the teeth, except for the minimum arc required to permit the base to be tilted for bevel cuts and for the minimum arc required to allow proper retraction and contact with the work,

respectively. When the tool is withdrawn from the work, the lower guard shall automatically and instantly return to the covering position.

c. Blades of planers and jointers shall be fully guarded and have cylindrical heads with throats in the cylinder.

d. Bandsaw blades shall be fully enclosed except at the point of operation.

e. Additional guarding requirements for fixed (nonportable) woodworking machinery are contained in Appendix E.

13.C.02 Automatic feeding devices shall be installed on machines whenever possible. Feeder attachments shall have the feed rolls or other moving parts covered or guarded so as to protect the operator from hazardous points.

13.C.03 The operating speed shall be permanently marked on all circular saws more than 50 cm (20 in) in diameter or operating at over 51 peripheral m/s (10,000 peripheral ft/min).

a. Any saw so marked shall not be operated at a speed other than that marked on the blade.

b. When a marked saw is retensioned for a different speed, the marking shall be corrected to show the new speed.

13.C.04 Radial arm power saws shall be equipped with an automatic brake.

13.C.05 The table of radial arm or swing saws shall extend beyond the leading edge of the saw blade.

13.C.06 Radial arm power saws shall be installed in such a manner that the cutting head will return to the starting position when released by the operator. All swing cutoff and radial saws or similar machines which are drawn across a table shall be

equipped with limit stops to prevent the leading edge of the tool from traveling beyond the edge of the table.

13.C.07 Each hand-fed crosscut table saw and each hand-fed circular ripsaw shall have a spreader to prevent the material from squeezing the saw or being thrown back on the operator.

13.C.08 Operating procedures.

a. Bandsaws and other machinery requiring warmup for safe operation shall be permitted to warm up before being put into operation whenever the temperature is below 7° C (45° F).

b. A push-stick, block, or other safe means shall be used on all operations close to high-speed cutting edges.

c. The use of cracked, bent, or otherwise defective parts such as saw blades, cutters, or knives is prohibited.

d. A brush shall be provided for the removal of sawdust, chips, and shavings on all woodworking machinery.

e. Power saws shall not be left running unattended.

13.D PNEUMATIC TOOLS

13.D.01 Safety clips or retainers shall be installed and maintained on pneumatic impact tools to prevent dies and tools from being accidentally expelled from the barrel.

13.D.02 Pressure shall be shut off and exhausted from the line before disconnecting the line from any tool or connection.

13.D.03 Safety lashing shall be provided at connections between tool and hose and at all quick makeup type connections.

13.D.04 Hoses shall not be used for hoisting or lowering tools.

13.D.05 Airless spray guns of the type which atomize paints and fluids at high pressures (450 kg (1,000 lbs) or more) shall be equipped with automatic or visible manual safety devices which will prevent pulling of the trigger to prevent release of the paint or fluid until the safety device is manually released. In lieu of the above, a diffuser nut which will prevent high pressure velocity release while the nozzle tip is removed plus a nozzle tip guard which will prevent the tip from coming into contact with the operator, or other equivalent protection may be provided.

13.D.06 Impact wrenches shall be provided with a locking device for retaining the socket.

13.D.07 See Section 20 for pressurized equipment and systems requirements.

13.E EXPLOSIVE-ACTUATED TOOLS

13.E.01 Explosive-actuated (powder-actuated) tools shall meet the design requirements of ANSI A10.3, Safety Requirements for Explosive-Actuated Tools.

13.E.02 Only qualified operators shall operate explosive-actuated tools. A qualified operator is one who has:

a. been trained by an authorized instructor (one who has been trained, authorized, and provided an authorized instructor's card by the tool manufacturer or by an authorized representative of the tool manufacturer);
b. passed a written examination provided by the manufacturer of the tool; and
c. possesses a qualified operator's card supplied by the manufacturer and issued and signed by both the instructor and the operator.

13.E.03 Each tool shall be provided with the following:

a. a lockable container with the words "**POWDER- ACTUATED**

TOOL" in plain sight on the outside and a notice reading "**WARNING - POWDER-ACTUATED TOOL TO BE USED ONLY BY A QUALIFIED OPERATOR AND KEPT UNDER LOCK AND KEY WHEN NOT IN USE**" on this inside;

b. operator's instruction and service manual;
c. power load and fastener charts;
d. tool inspection record; and
e. service tools and accessories.

13.E.04 Inspection and testing.

a. Daily inspection, cleaning, and testing shall be performed as recommended by the manufacturer.

b. Explosive-actuated tools shall be tested, in accordance with the manufacturer's recommended procedure, each day before loading to see that safety devices are in proper working condition.

c. Explosive-actuated tools shall be inspected, thoroughly cleaned and tested after each 1,000 fastenings.

13.E.05 Explosive-actuated tools and the charges shall be secured at all times to prevent unauthorized possession or use.

13.E.06 Explosive-actuated tools shall not be loaded until just before the intended firing time; neither loaded nor empty tools are to be pointed at any employees; hands shall be kept clear of the open barrel end.

13.E.07 The use of explosive-actuated tools is prohibited in explosive or flammable atmospheres.

13.E.08 Fasteners shall not be driven:

a. into soft or easily penetrable materials unless they are backed by a material that will prevent the fastener from passing through to the other side;

b. into very hard or brittle material, such as cast iron, hardened steel, glazed or hollow tile, glass block, brick, rock;
c. into concrete unless the material thickness is at least three times the penetration of the fastener shank; or
d. into spalled concrete.

13.E.09 The tool operator shall wear safety goggles or other face and eye protection.

13.F CHAIN SAWS

13.F.01 All chain saws shall have an automatic chain brake or kickback device.

13.F.02 The idle speed shall be adjusted so that the chain does not move when the engine is idling.

13.F.03 Operators will wear personal protective equipment: eye, ear, hand, foot (safety shoes), and leg protection are required as a minimum.

13.F.04 Chain saws will not be fueled while running or hot or near open flame; saws will not be started within 3 m (10 ft) of a fuel container.

13.F.05 The operator will hold the saw with both hands during all cutting operations.

13.F.06 A chain saw must never be used to cut above the operators' shoulder height.

13.F.07 See Section 31 for tree maintenance and removal requirements.

13.G ABRASIVE BLASTING EQUIPMENT

13.G.01 Hose and hose connections shall be designed to prevent build up of static electricity.

13.G.02 All connections and nozzles shall be designed to prevent accidental disengagement: all connections shall be equipped with safety lashings. ***> See 20.A.16***

13.G.03 Nozzle attachments shall be of metal and fit on the outside of the hose. A deadman type control device shall be provided at the nozzle, to cut off the flow if the operator looses control of hose. A support shall be provided on which the nozzle may be mounted when it is not in use.

13.G.04 Additional requirements on abrasive blasting are in Sections 5 and 6.

DEFINITIONS

Abrasive wheel: a cutting tool made of abrasive grains held together by organic (such as resin, rubber, or shellac) or inorganic (such as clay, glass, porcelain, sodium silicate, magnesium oxychloride, or metal) bonds.

Explosive-actuated tool: a tool which uses the expanding gases from a power load to drive a fastener.

Mandrel: a steel shaft and bearings assembly on which a tool, such as an abrasive wheel, is mounted and by which power is transmitted from the machine to the tool.

Spindle: a long tapered pin or rod serving as an axis in spinning.

Tool rest (work rest): a device which prevents the tool or work piece from jamming between the abrasive wheel and the wheel guard.

SECTION 14

MATERIAL HANDLING, STORAGE, AND DISPOSAL

14.A MATERIAL HANDLING

14.A.01 Employees shall be trained in and shall use safe lifting techniques.

14.A.02 Requirements for personal protective equipment are covered in Section 5.

14.A.03 Material handling devices shall be available for the material handling needs of an activity.

14.A.04 Whenever heavy or bulky material is to be moved, the material handling needs shall be evaluated in terms of weight, size, distance, and path of movement. The following hierarchy shall be followed in selecting a means for material handling:

a. elimination of material handling needs by engineering,
b. movement by mechanical device (e.g., lift truck, overhead crane, or conveyor),
c. movement by manual means with handling aid (e.g., dollie or cart), or
d. movement using safe lifting techniques.

14.A.05 Materials will not be moved over or suspended above personnel unless positive precautions have been taken to protect the personnel from falling objects.

14.A.06 Where the movement of materials may be hazardous to persons, taglines or other devices shall be used to control the loads being handled by hoisting equipment: these devices shall be nonconductive when used near energized lines.

14.B MATERIAL STORAGE

14.B.01 All material in bags, containers, bundles, or stored in tiers shall be stacked, blocked, interlocked, and limited in height so that it is stable and secured against sliding or collapse.

a. Material shall be stacked as low as practical and in no case higher than 6 m (20 ft) unless otherwise specified in this Section.

b. Storage of flammable and combustible materials is covered in Section 9.

14.B.02 Material stored inside buildings under construction shall not be placed within 1.8 m (6 ft) of any hoistway or floor opening, nor within 3 m (10 ft) of an exterior wall which does not extend above the material stored.

14.B.03 Accessways shall be kept clear.

14.B.04 Unauthorized persons shall be prohibited from entering storage areas. All persons shall be in a safe position while materials are being loaded or unloaded from railroad cars, trucks, or barges.

14.B.05 Material shall not be stored on scaffolds or runways in excess of needs for normal placement operations, or in excess of safe load limits.

14.B.06 Noncompatible materials shall be segregated in storage.

14.B.07 Storage of lumber.

a. Storage of lumber during construction shall be in sections containing a maximum of 1 million board feet with at least 3 m (10 ft) clearance from buildings.

b. Lumber shall be supported on stable sills and shall be stacked level, stable, and self-supporting.

c. Reusable lumber shall have all nails withdrawn before it is stacked for storage.

d. Lumber piles shall not exceed 6 m (20 ft) in height; lumber to be handled manually shall not be stacked more than 4.8 m (16 ft) high.

14.B.08 Storage of bagged materials.

a. Bagged materials shall be stacked by stepping back the layers and cross-keying the bags at least every ten bags high.

b. Bags of cement and lime shall not be stacked more than ten high without setback, except when restrained by walls of appropriate strength.

c. The bags around the outside of the stack shall be placed with the mouths of the bags facing the center of the stack.

d. During unstacking, the top of the stack shall be kept nearly level and the necessary setback maintained.

14.B.09 Storage of brick.

a. Brick shall be stacked on an even, solid surface.

b. Bricks stacks shall not be more than 2.1 m (7 ft) high; when stacked loose brick reaches a height of 1.2 m (4 ft) it shall be tapered back 5 cm (2 in) in every 0.3 m (1 ft) of height above the 1.2 m (4 ft) level.

c. Unitized brick (brick securely gathered into large standard packages and fastened with straps) shall not be stacked more than three units high.

14.B.10 Storage of floor, wall, and partition block.

a. Blocks shall be stacked in tiers on solid, level surfaces.

b. When masonry blocks are stacked higher than 1.8 m (6 ft), the stack shall be tapered back one-half block per tier above the 1.8 m (6 ft) level.

14.B.11 Storage of reinforcing, sheet, and structural steel.

a. Reinforcing steel shall be stored in orderly piles away from walkways and roadways.

b. Structural steel shall be securely piled to prevent members sliding off or the pile toppling over.

14.B.12 Storage of cylindrical material.

a. Structural steel, poles, pipe, bar stock, and other cylindrical materials, unless racked, shall be stacked and blocked so as to prevent spreading or tilting.

b. Pipe, unless racked, shall not be stacked higher than 1.5 m (5 ft).

c. Either a pyramid or battened stack shall be used.

d. Where a battened stack is used, the outside pile or pole shall be securely chocked: battened stacks shall be tapered back at least one pile or pole in each tier.

e. Unloading of round material shall be done so that no person is required to be on the unloading side of the carrier after the tie wires have been cut or during the unlocking of the stakes.

14.C HOUSEKEEPING

14.C.01 Work areas and means of access shall be maintained safe and orderly.

a. Sufficient personnel and equipment shall be provided to insure compliance with all housekeeping requirements.

b. Work areas shall be inspected daily for adequate housekeeping and findings recorded on daily inspection reports.

c. Work will not be allowed in those areas that do not comply with the requirements of this Section.

14.C.02 All stairways, passageways, gangways, and accessways shall be kept free of materials, supplies, and obstructions at all times.

14.C.03 Loose or light material shall not be stored or left on roofs or floors that are not closed in, unless it is safely secured.

14.C.04 Tools, materials, extension cords, hoses, or debris shall not cause tripping or other hazards.

14.C.05 Tools, materials, and equipment subject to displacement or falling shall be adequately secured.

14.C.06 Empty bags having contained lime, cement, and other dust-producing material shall be removed periodically as specified by the designated authority.

14.C.07 Form and scrap lumber and debris shall be cleared from work areas and accessways in and around building storage yards and other structures.

14.C.08 Protruding nails in scrap boards, planks, and timbers shall be removed, hammered in, or bent over flush with the wood.

14.C.09 Storage and construction sites shall be kept free from the accumulation of combustible materials.

a. Weeds and grass shall be kept down.

b. A regular procedure shall be established for the cleanup of the areas as specified by the designated authority.

c. Rubbish, brush, long grass, or other combustible material shall be kept from areas where flammable and combustible liquids are stored, handled, or processed.

14.C.10 Accumulation of liquids, particularly flammable and combustible liquids, on floors, walls, etc., is prohibited. All spills of flammable and combustible liquids shall be cleaned up immediately.

14.D MATERIAL DISPOSAL

14.D.01 Waste material and rubbish shall be placed in containers or, if appropriate, in piles.

14.D.02 Waste materials and rubbish shall not be thrown down from a height of more than 1.8 m (6 ft) unless the following are complied with.

a. The materials or rubbish are dropped through an enclosed chute constructed of wood or equivalent material. Chutes for debris shall be enclosed except for openings equipped with closures at or about floor level for the insertion of materials; the openings shall not exceed 1.2 m (48 in) in height measured along the wall of the chute. Openings shall be kept closed when not in use.

b. When debris cannot be handled by chutes, the area into which the material is dropped shall be enclosed with barricades not less than 1 m (42 in) in height. Barricades shall be positioned to keep personnel from all debris landing areas; signs warning of the hazard of falling material shall be posted at all debris landing areas and at each level exposed to falling debris.

14.D.03 See Section 9 for burning requirements.

14.D.04 Separate covered, self-closing, nonflammable/-non-reactive containers shall be provided for the collection of

garbage, oily, flammable, and dangerous wastes.

a. The containers shall be labeled with a description of the contents.

b. The contents shall be properly disposed of daily.

14.D.05 Hazardous material waste (i.e., vehicle and equipment oils and lubricants, containers and drums for solvents, adhesives, etc.) shall be collected, stored, and disposed of in accordance with Federal, state, and local requirements.

SECTION 15

RIGGING

15.A GENERAL

15.A.01 Inspection and use.

a. Rigging equipment for material handling shall be inspected as specified by the manufacturer, by a qualified person, before use on each shift and as necessary during its use to ensure that it is safe.

b. Defective rigging, as specified in Appendix F, shall be removed from service.

c. The use and maintenance of rigging equipment shall be in accordance with recommendations of the rigging manufacturer and the equipment manufacturer: rigging equipment shall not be loaded in excess of its recommended safe working load.

d. Rigging equipment, when not in use, shall be removed from the immediate work area and properly stored and maintained in a safe condition.

15.A.02 Hoist rope shall not be wrapped around the load.

15.A.03 Running lines located within 2 m (6 ft - 6 in) of the ground or working level shall be guarded or the area restricted.

15.A.04 All eye splices shall be made in an approved manner; rope thimbles of proper size shall be fitted in the eye, except that in slings the use of thimbles shall be optional.

15.A.05 When hoisting loads, a positive latching device shall be used to secure the load and rigging.

15.A.06 Hooks, shackles, rings, pad eyes, and other fittings that show excessive wear or that have been bent, twisted, or otherwise damaged shall be removed from service.

15.A.07 Custom designed grabs, hooks, clamps, or other lifting accessories for such units as modular panels, prefabricated structures, and similar materials shall be marked to indicate the safe working loads and shall be proof-tested, before use, to 125% of their rated load.

15.A.08 The practice of "Christmas tree lifting" steel is prohibited.

15.B WIRE ROPE

15.B.01 When two wires are broken or rust or corrosion is found adjacent to a socket or end fitting, the wire rope shall be removed from service or resocketed. ***> Special attention shall be given to the inspection of end fittings on boom support, pendants, and guy ropes***

15.B.02 Wire rope removed from service due to defects shall be cut up or plainly marked as unfit for further use as rigging.

15.B.03 Wire rope clips attached with U-bolts shall have the U-bolts on the dead or short end of the rope: the clip nuts shall be retightened immediately after initial load carrying use and at frequent intervals thereafter. ***> See Figure 15-1***

15.B.04 When a wedge socket fastening is used, the dead or short end of the wire rope shall have a clip attached to it or looped back and secured to itself by a clip: the clip shall not be attached directly to the live end.

15.B.05 Protruding ends of strands in splices on slings and bridles shall be covered or blunted.

15.B.06 Except for eye splices in the ends of wires and for endless wire rope slings, wire rope used in hoisting, lowering, or

pulling loads, shall consist of one continuous piece without knot or splice.

a. An eye splice made in any wire rope shall have not less than five full tucks (this requirement shall not preclude the use of another form of splice or connection which can be shown to be as efficient and which is not otherwise prohibited).

b. Wire rope shall not be secured by knots except on haul back lines on scrapers.

15.B.07 Eyes in wire rope bridles, slings, or bull wires shall not be formed by wire rope clips or knots.

15.B.08 Wire rope clips shall not be used to splice rope.

15.C CHAIN

15.C.01 Only alloyed chain shall be used in rigging.

15.C.02 Chain shall be inspected before initial use and weekly thereafter.

15.C.03 When used with alloy steel chains, hooks, rings, oblong links, pear-shaped links, welded or mechanical coupling links, or other attachments shall have a rated capacity at least equal to that of the chain.

15.C.04 Job or shop hooks and links, makeshift fasteners formed from bolts and rods, and other similar attachments shall not be used.

15.D FIBER ROPE (NATURAL AND SYNTHETIC)

15.D.01 Fiber rope shall not be used if it is frozen or if it has been subjected to acids or excessive heat.

15.D.02 Fiber rope shall be protected from abrasion by padding

where it is fastened or drawn over square corners or sharp or rough surfaces.

15.D.03 All splices in rope slings provided by the employer shall be made in accordance with fiber rope manufacturer's recommendations.

15.D.04 Eye splices.

a. In manila rope, eye splices shall contain at least three full tucks and short splices shall contain at least six full tucks (three on each side of the centerline of the splice).

b. In layed synthetic fiber rope, eye splices shall contain at least four full tucks and short splices shall contain at least eight full tucks (four on each side of the centerline of the splice).

15.D.05 Strand end tails shall not be trimmed short (flush with the surface of the rope) immediately adjacent to the full tucks: this applies to both eye and short splices and all types of fiber rope.

a. For fiber ropes less than 2.5 cm (1 in) diameter, the tails shall project at least six rope diameters beyond the last full tuck.

b. For fiber ropes 2.5 cm (1 in) diameter and larger, the tails shall project at least 15 cm (6 in) beyond the last full tuck.

In applications where the projecting tails may be objectionable, the tails shall be tapered and splices into the body of the rope using at least two additional tucks (which will require a tail length of approximately six rope diameters beyond the last full tuck).

15.D.06 For all eye splices, the eye shall be sufficiently large to provide an included angle of not greater than 60° at the splice when the eye is placed over the load or support.

15.D.07 Knots shall not be used in lieu of splices.

FIGURE 15-1
WIRE ROPE CLIPS

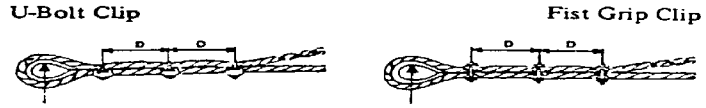

Thimble
U-Bolt of All clips on dead end of rope.
Never stagger clips.
Never put U-Bolt of clip on live end of rope.

Thimble
Note: D = six times diameter of wire rope

NUMBER OF CLIPS AND THE PROPER TORQUE NECESSARY TO ASSEMBLE WIRE ROPE EYE LOOP CONNECTIONS WITH A PROBABLE EFFICIENCY NOT MORE THAN 80 PERCENT.

Rope diameter (in.)	Nominal size of clips	Number of clips	Torque to be applied to nuts of clips (ft-lbs)
5/16	3/8	3	25
3/8	3/8	3	25
7/16	1/2	4	40
1/2	1/2	4	40
5/8	5/8	4	65
3/4	3/4	5	100
7/8	1	5	165
1	1	6	165
1-1/4	1-1/4	7	250
1-3/8	1-1/2	7	375
1-1/2	1-1/2	8	375
1-3/4	1-3/4	8	560

The spacing of clips should be six times the diameter of the wire rope. Thimbles shall be used if wire rope is to be spliced.

FIGURE 15-2
SLING CONFIGURATIONS

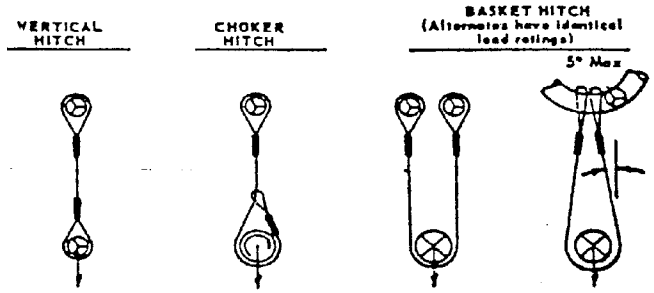

15.E SLINGS

15.E.01 Slings and their fittings and fastenings, shall be inspected before use on each shift and as necessary during use.

15.E.02 Protection shall be provided between the sling and sharp unyielding surfaces of the load to be lifted.

15.E.03 The use of slings will be such that the entire load is positively secured.

15.E.04 Lengths.

a. Wire rope slings shall have a minimum length of clear wire rope equal to ten times the rope diameter between each end fitting or eye splice.

b. Braided slings shall have a minimum clear length of braided body equal to forty times the diameter of component ropes between each end fitting or eye splice.

15.E.05 Welded alloy steel chain slings shall have affixed durable permanent identification stating size, grade, rated capacity, and sling manufacturer.

15.E.06 The employer shall have each synthetic web sling marked or coded to show:

a. name or trademark of the manufacturer,
b. rated capacities for the type of hitch, and
c. type of material.

15.F RIGGING HARDWARE

15.F.01 Drums, sheaves, and pulleys shall be smooth and free of surface defects which may damage rigging.

15.F.02 The ratio between the diameter of the rigging and the

drum, block, sheave, or pulley tread diameter shall be such that the rigging will adjust itself to the bend without excessive wear, deformation, or damage.

15.F.03 In no case will the safe diameters of drums, blocks, sheaves, or pulleys be reduced in replacement of such items unless compensating changes are made in terms of the rigging used and the safe loading limits.

15.F.04 Drums, sheaves, or pulleys having eccentric bores, cracked hubs, spokes, or flanges shall be removed from service.

15.F.05 Connections, fittings, fastenings, and attachments used with rigging shall be of good quality, of proper size and strength, and shall be installed in accordance with recommendations of the manufacturer.

15.F.06 Shackles.

a. Table 15-1 shall be used to determine the safe working loads of various sizes of shackles, except that higher safe working loads are permissible when allowed by the manufacturer if a safety factor of at least five is maintained.

b. Shackles shall not be eccentrically loaded.

15.F.07 Hooks.

a. The manufacturer's recommendations shall be followed in determining the safe working loads of the various sizes and types of specific and identifiable hooks. Any hook for which the manufacturer's recommendations are not available shall be tested to twice the intended safe working load before it is put into use: the employer shall maintain a record of the dates and results of such tests.

b. Open hooks are prohibited in rigging used to hoist loads.

c. Hoisting hooks rated at 9,000 kg (10 tons) or larger shall be provided with a means for safe handling.

15.F.08 Drums.

a. Drums shall have sufficient rope capacity with recommended rope size and reeving to perform all hoisting and lowering functions.

TABLE 15-1

SAFE WORKING LOADS FOR SHACKLES

Material size	Pin diameter	Safe working load
1.3 cm	1.6 cm	1,270 kg
1.6 cm	1.9 cm	2,000 kg
1.9 cm	2.2 cm	2,900 kg
2.2 cm	2.5 cm	3,900 kg
2.5 cm	2.8 cm	5,080 kg
2.8 cm	3.1 cm	6,080 kg
3.1 cm	3.4 cm	7,450 kg
3.4 cm	3.8 cm	9,080 kg
3.8 cm	4.1 cm	10,800 kg
4.4 cm	5 cm	14,700 kg
5 cm	5.6 cm	19,300 kg

b. At least three full wraps (not layers) of rope shall remain on the drum at all times.

c. The drum end of the rope shall be anchored by a clamp securely attached to the drum with an arrangement approved by the manufacturer.

d. Grooved drums shall have the correct groove pitch for the diameter of the rope: the depth of the groove shall be correct for the diameter of the rope.

(1) The flanges on grooved drums shall project beyond the last layer of rope a distance of either 5 cm (2 in) or twice the diameter of the rope, whichever is greater.

(2) The flanges on ungrooved drums shall project beyond the last layer of rope a distance of either 6.3 cm (2.5 in) or twice the diameter of the rope, whichever is greater.

15.F.09 Sheaves.

a. Sheaves shall be compatible with the size of rope used, as specified by the manufacturer.

b. Sheaves shall be inspected to insure they are of correct size, properly aligned, lubricated, and in good condition.

c. When rope is subject to riding or jumping off a sheave, the sheave shall be equipped with cable-keepers.

15.F.10 Eye bolts.

a. Shoulderless eye bolts shall not be loaded at an angle.

b. Eye bolts shall only be loaded in the plain of the eye and shall not be loaded at angles of less than 45° to the horizontal.

DEFINITIONS

Braided sling: a sling made from braided rope.

Bridle sling: multiple-leg-sling; the legs of the sling are spread to distribute the load.

Cable laid rope: a rope composed of several wire ropes laid as strands around a wire rope core.

Cable laid rope sling, mechanical joint: a wire rope sling made from a cable laid wire rope with eyes fabricated by pressing or swaging metal sleeves over the rope junction.

Cable laid endless sling - mechanical joint: a wire rope sling made from one continuous length of cable laid rope with the ends joined by one or more metallic fittings.

Cable laid grommet, hand tucked: an endless wire rope sling made from one continuous length of rope formed to make a body composed of six ropes around a rope core. The rope ends are tucked into the body, forming the core. No sleeves are used.

Choker: a sling used to form a slip noose around an object.

Christmas tree lifting: the tandem lifting of steel (multiple steel members rigged together) by one crane.

Coarse laid rope: 6 x 7 wire rope (6 strands, 7 wires per strand).

Endless rope: rope in which the ends are spliced together.

Fleet angle: the angle between the rope as it leaves the drum (at the extreme end wrap on a drum) for the sheave and an imaginary center-line passing through the center of the sheave groove and a point halfway between the ends of the drum.

Grommet: an endless 7-strand wire rope.

Independent wire rope core: a small 6 x 7 wire rope with a wire strand core; used to provide greater resistance to crushing and distortion of the wire rope.

Reeving: a rope system in which the rope travels around drums and sheaves.

Rotation resistant rope: a wire rope consisting of an inner layer of strand laid in one direction covered by a layer of strand laid in the opposite direction: this has the effect of counteracting torque by reducing the tendency of the finished rope to rotate.

Shackle: a U-shaped metal fitting with a pin through the ends.

Sheave: the grooved wheel of a pulley or block over which rope or cable is passed.

Sling: an assembly used for lifting when connected to a lifting mechanism at the sling's upper end and when supporting a load at the sling's lower end. ***> See Figure 15-2***

Sling - vertical: a load suspended on a single, vertical, part or leg.

Sling - basket: loading with the sling passed under the load with both ends, end attachments, eyes, or handles on the hook or a single master link.

Sling - choker: loading with the sling passed through one end attachment, eye, or handle and suspended by the other.

Splice - eye: a splice formed by bending a rope's end back onto itself and splicing it into the rope so that a loop is formed.

Splice - hand tucked: a loop formed in the end of a rope by tucking the end of the strands back into the main body of the rope.

Splice - long: a splice without an appreciable increase of circumference that is used when the rope must run over a sheave

or through a hole.

Splice - mechanical: a loop formed in the end of a rope and connected by pressing (swaging) one or more metal sleeves over the junction of the rope.

Splice - short: a splice using less material than a long splice but increasing the circumference.

Strand laid rope: a wire rope made with strands formed around a fiber core, wire core, or independent wire rope core.

Swaged fittings: fittings in which wire rope is inserted and attached by cold flowing method.

Wire rope: a number of strands laid helically about a metallic or non-metallic core. Each strand consists of a number of wires also laid helically about a metallic or non-metallic center. Wire rope is specified by the kind of core, the number of strands, the number, sizes, and arrangement of the wires in each strand, and the way in which the wires and strands are wound or laid about each other. Wire rope is commonly designated by two numbers: the first indicating the number of strands and the second the number of wires per strand (for ropes with a wire strand core, a second group of two numbers may be used to indicate the construction of the wire core).

Wire strand core: consists of a multiple-wire strand that may be the same as one of the strands of the rope: it is smoother and more solid than the independent wire rope core and provides a better support for the rope strands.

SECTION 16

MACHINERY AND MECHANIZED EQUIPMENT

16.A GENERAL

16.A.01 Before any machinery or mechanized equipment is placed in use, it shall be inspected and tested by a competent person and certified to be in safe operating condition.

a. Inspections and tests shall be in accordance with the manufacturer's recommendations and shall be documented.

b. Records of tests and inspections shall be maintained at the site by the contractor, and shall be made available upon request of the designated authority, and shall become part of the official project file.

16.A.02 Daily/shift inspections and tests.

a. All machinery and equipment shall be inspected daily (when in use) to ensure safe operating conditions: the employer shall designate competent persons to conduct the daily inspections and tests.

b. Tests shall be made at the beginning of each shift during which the equipment is to be used to determine that the brakes and operating systems are in proper working condition and that all required safety devices are in place and functional.

16.A.03 Whenever any machinery or equipment is found to be unsafe, or whenever a deficiency which affects the safe operation of equipment is observed, the equipment shall be immediately taken out of service and its use prohibited until unsafe conditions have been corrected.

a. A tag indicating that the equipment shall not be operated, and that the tag shall not be removed, shall be placed in a

conspicuous location on the equipment. Where required, lockout procedures shall be used. ***> See section 12***

b. The tag shall remain in its attached location until it is demonstrated to the individual deadlining the equipment that it is safe to operate.

c. When corrections are complete, the machinery or equipment shall be retested and reinspected before being returned to service.

16.A.04 Machinery and mechanized equipment shall be operated only by designated qualified personnel.

a. Machinery or equipment shall not be operated in a manner that will endanger persons or property nor shall the safe operating speeds or loads be exceeded.

b. Getting off or on any equipment while it is in motion is prohibited.

c. Machinery and equipment shall be operated in accordance with the manufacturer's instructions and recommendations.

d. The use of headphones for entertainment purposes (e.g., AM/FM radio or cassette) while operating equipment is prohibited.

16.A.05 When the manufacturer's instructions or recommendations are more stringent that the requirements of this manual, the manufacturer's instructions or recommendations shall apply.

16.A.06 Inspections or determinations of road conditions and structures shall be made in advance to assure that clearances and load capacities are safe for the passage or placing of any machinery or equipment.

16.A.07 Equipment requirements.

a. Seats or equal protection must be provided for each person required to ride on equipment.

b. Equipment operated on the highway shall be equipped with headlights, taillights, brake lights, and backup light and turn signals visible from the front and rear.

c. All equipment with windshields shall be equipped with powered wipers. Vehicles that operate under conditions that cause fogging or frosting of windshields shall be equipped with operable defogging or defrosting devices.

d. Mobile equipment, operating within an off-highway job site not open to public traffic, shall have a service brake system and a parking brake system capable of stopping and holding the equipment while fully loaded on the grade of operation. In addition, it is recommended that heavy duty hauling equipment have an emergency brake system which will automatically stop the equipment upon failure of the service brake system; this emergency brake system should be manually operable for the driver's position.

16.A.08 Maintenance and repairs.

a. Maintenance, including preventive maintenance, and repairs shall be in accordance with the manufacturer's recommendations and shall be documented. Records of maintenance and repairs conducted during the life of a contract shall be made available upon request of the designated authority.

b. All machinery or equipment shall be shut down and positive means taken to prevent its operation while repairs or manual lubrications are being done. Equipment designed to be serviced while running are exempt from this requirement.

c. All repairs on machinery or equipment shall be made at a location which will protect repair personnel from traffic.

d. Heavy machinery, equipment, or parts thereof which are suspended or held apart by slings, hoist, or jacks also shall be substantially blocked or cribbed before personnel are permitted to work underneath or between them.

16.A.09 Bulldozer and scraper blades, end-loader buckets, dump bodies, and similar equipment shall be either fully lowered or blocked when being repaired or when not in use. All controls shall be in a neutral position, with the engines stopped and brakes set, unless work being performed on the machine requires otherwise.

16.A.10 Stationary machinery and equipment shall be placed on a firm foundation and secured before being operated.

16.A.11 All mobile equipment and the areas in which they are operated shall be adequately illuminated while work is in progress.

16.A.12 Equipment powered by an internal combustion engine will not be operated in an enclosed area unless adequate ventilation is provided to ensure the equipment does not generate a hazardous atmosphere.

16.A.13 All vehicles which will be parked or moving slower than normal traffic on haul roads shall have a yellow flashing light or four-way flashers visible from all directions.

16.A.13 No one shall be permitted in the truck cab during loading operations except the driver and then only if the truck has a cab protector. ***> See also 18.B.16a***

16.A.14 Mechanized equipment shall be shut down before and during fueling operations. Closed systems, with automatic shut-off which will prevent spillage if connections are broken,

may be used to fuel diesel powered equipment left running.

16.A.15 Towing.

a. All towing devices used on any combination of equipment shall be structurally adequate for the weight drawn and securely mounted.

b. Persons shall not be permitted to get between a towing vehicle and the piece of towed equipment until both have been completely stopped with all brakes set and wheels chocked on both vehicle and equipment.

16.A.16 All machinery or equipment operating on rails, tracks, or trolleys (except railroad equipment) shall be provided with substantial track scrapers or track clearers - effective in both directions - on each wheel or set of wheels.

16.A.17 Parking.

a. Whenever equipment is parked the parking brake shall be set.

b. Equipment parked on an incline shall have the wheels chocked or track mechanisms blocked and the parking brake set.

c. All equipment left unattended at night, adjacent to a highway in normal use or adjacent to construction areas where work is in progress, shall have lights or reflectors, or barricades equipped with lights or reflectors, to identify the location of the equipment.

16.A.18 No modifications or additions which affect the capacity or safe operation of machinery or equipment shall be made without the manufacturer's written approval.

a. If such modifications or changes are made, the capacity, operation, and maintenance instruction plates, tags, or decals

shall be changed accordingly.

b. In no case shall the original safety factor of the equipment be reduced.

16.A.19 Steering or spinner knobs shall not be attached to the steering wheel unless the steering mechanism prevents road reactions from causing the steering handwheel to spin: when permitted, the steering knob shall be mounted within the periphery of the wheel.

16.A.20 Safeguards shall be provided to prevent machinery and equipment operating on floating plant from going into the water. ***> See also 16.F.06***

16.A.21 All industrial trucks shall meet the requirements of design, construction, stability, inspection, testing, maintenance, and operation, defined in ANSI/ASME B56.1, *Safety Standards for Low Lift and High Lift Trucks*.

16.A.22 Lift trucks, stackers, and similar equipment shall have the rated capacity posted on the vehicle so as to be clearly visible to the operator. When auxiliary removable counterweights are provided by the manufacturer, corresponding alternate rated capacities also shall be clearly shown on the vehicle. The ratings shall not be exceeded.

16.A.23 The controls of loaders, excavators, or similar equipment with folding booms or lift arms shall not be operated from a ground position unless so designed.

16.A.24 Personnel shall not work or pass under or ride in the buckets or booms of loaders in operation.

16.A.25 Tire service vehicles shall be operated so that the operator will be clear of tires and rims when hoisting operations are being performed. Tires large enough to require hoisting equipment will be secured from movement by continued support

of the hoisting equipment unless bolted to the vehicle hub or otherwise restrained. ***> Also see 16.B.06***

16.A.26 Each bulldozer, scraper, dragline, crane, motor grader, front-end loader, mechanical shovel, backhoe, and other similar equipment shall be equipped with at least one dry chemical or carbon-dioxide fire extinguisher with a minimum rating of 5-B:C.

16.A.27 Fill hatches on water haul vehicles shall be secured or the opening reduced to a maximum of 20 cm (8 in).

16.B GUARDING AND SAFETY DEVICES

16.B.01 Reserve signal (back-up) alarm.

a. All self-propelled construction and industrial equipment, whether moving alone or in combination, shall be equipped with a reverse signal alarm. ***> Equipment designed and operated so that the operator is always facing the direction of motion does not require a reverse signal alarm***

b. Reverse signal alarms shall be audible and sufficiently distinct to be heard under prevailing conditions.

c. Alarms shall operate automatically upon commencement of backward motion. Alarms may be continuous or intermittent (not to exceed 3-second intervals) and shall operate during the entire backward movement.

d. Reverse signal alarms shall be in addition to requirements for signalpersons.

16.B.02 A warning device or signalperson shall be provided where there is danger to persons from moving equipment, swinging loads, buckets, booms, etc.

16.B.03 Guarding.

a. All belts, gears, shafts, pulleys, sprockets, spindles, drums, flywheels, chains, or other reciprocating, rotating or moving parts of equipment shall be guarded when exposed to contact by persons or when they otherwise create a hazard.

b. All hot surfaces of equipment, including exhaust pipes or other lines, shall be guarded or insulated to prevent injury and fire.

c. All equipment having a charging skip shall be provided with guards on both sides and open end of the skip area to prevent persons from walking under the skip while it is elevated.

d. Platforms, footwalks, steps, handholds, guardrails, and toeboards shall be designed, constructed, and installed on machinery and equipment to provide safe footing and accessways.

e. Equipment shall be provided with suitable working surfaces of platforms, guard rails, and hand grabs when attendants or other employees are required to ride for operating purposes outside the operator's cab or compartment: platforms and steps shall be of nonskid material.

f. Substantial overhead protection shall be provided for the operators of fork lifts and similar material handling equipment.

16.B.04 Fuel tanks shall be located in a manner which will not allow spills or overflows to run onto engine, exhaust, or electrical equipment.

16.B.05 Exhaust or discharges from equipment shall be so directed that they do not endanger persons or obstruct the view of the operator.

16.B.06 A safety tire rack, cage, or equivalent protection shall be

provided and used when inflating, mounting, or dismounting tires installed on split rims, or rims equipped with locking rings of similar devices. ***> Also see 16.A.25***

16.B.07 No guard, safety appliance, or device shall be removed from machinery or equipment, or made ineffective except for making immediate repairs, lubrications, or adjustments, and then only after the power has been shut off. All guards and devices shall be replaced immediately after completion of repairs and adjustments and before power is turned on.

16.B.08 Seatbelts and anchorages meeting the requirements of 49 CFR 571 shall be installed and worn in all motor vehicles (installation and usage on buses in optional); two-piece seat belts and anchorages for construction equipment shall comply with applicable federal specifications or SAE J 386a.

16.B.09 All high rider industrial trucks shall be equipped with overhead guards which meet the structural requirements defined in paragraph 4.21 of ANSI/ASME B56.1, *Safety Standards for Low Lift and High Lift Trucks*.

16.B.10 Suitable protection against the elements, falling or flying objects, swinging loads, and similar hazards shall be provided for operators of all machinery or equipment; glass used in windshields or cabs shall be safety glass.

16.B.11 Falling object protective structures (FOPs).

a. All bulldozers, tractors, or similar equipment used in clearing operations shall be provided with guards, canopies, or grills to protect the operator from falling and flying objects as appropriate to the nature of the clearing operations.

b. FOPs for other construction, industrial, and grounds-keeping equipment will be furnished when the operator is exposed to falling object hazards.

c. FOPs will be certified by either the manufacturer or a licensed engineer as complying with the following applicable Society of Automotive Engineers (SAE) recommended practices:

(1) J 231 - *Minimum Performance Criteria for Falling Object Protective Structures (FOPS)*
(2) J 1043 - *Minimum Performance Criteria for Falling Object Protective Structure (FOPS) for Industrial Equipment*

16.B.12 Rollover protective structures (ROPS).

a. In addition to the requirements of 16.B.08 and 16.B.11, seat belts and ROPS shall be installed on:

(1) crawler and rubber-tire tractors including dozers, push and pull tractors, winch tractors, and mowers;
(2) off-the-highway self-propelled pneumatic-tire earth movers such as trucks, pans, scrapers, bottom dumps and end dumps;
(3) motor graders;
(4) water tank trucks having a tank height less than the cab; and
(5) other self-propelled construction equipment such as front-end loaders, backhoes, rollers, and compactors.

b. ROPS are not required on:

(1) trucks designed for hauling on public highways,
(2) crane-mounted dragline backhoes,
(3) sections of rollers and compactors of the tandem steel-wheeled and self-propelled pneumatic tired type that do not have an operator's station,
(4) self-propelled rubber-tired lawn and garden tractors and side boom pipelaying tractors operated solely on flat terrain (maximum 10º slope; 20º slope permitted when off-loading from a truck) not exposed to rollover hazards, and
(5) cranes, draglines, or equipment on which the operator's cab and boom rotate as a unit.

c. ROPS may be removed from certain types of equipment when the work cannot be performed with the ROPS in place and when ROPS removal is justified and delineated in an activity hazard analysis and accepted in writing by the designated authority.

d. The operating authority shall furnish proof from the manufacturer or certification from a licensed engineer that the ROPS complies with the following SAE standards, as applicable:

(1) J 167a - *Overhead Protection for Agricultural Tractors - Test Procedures and Performance Requirements*;
(2) J 104c - *Performance Criteria for Rollover Protective Structures (ROPS) for Construction, Earthmoving, Forestry, and Mining Machines*;
(3) J 1042 - *Operator Protection for Industrial Equipment*;
(4) J 1084a - *Operator Protective Structure Performance Criteria for certain Forestry Equipment*;
(5) J 1194 - *Roll-Over Protective Structures (ROPS) for Wheeled Agricultural Tractors*;

e. ROPS shall also be acceptable if they meet the criteria of any state which has a Department of Labor approved OSHA program or meet Water and Power Resources Service requirements.

f. The following information permanently affixed to the ROPS is acceptable in lieu of a written certification:

(1) manufacturers or fabricator's name and address,
(2) ROPS model number, if any, and
(3) machine make, model, or series number that the structure is designed to fit.

g. Field welding on ROPS shall be performed by welders who are certified by the contractor as qualified in accordance with American Welding Society Standards D1.1, Military

Standard MIL-STD 248, or the equivalent.

16.B.13 All points requiring lubrication during operation shall have fittings so located or guarded to be accessible without hazardous exposure.

16.B.14 All machinery or equipment and material hoists operating on rails, tracks, or trolleys shall have positive stops or limiting devices either on the equipment, rails, tracks, or trolleys to prevent overrunning safe limits.

16.B.15 Under the following circumstances, long-bed end-dump trailers used in off-road hauling should be equipped with a roll-over warning device: the device should have a continuous monitoring display at the operator station to give the operator a quick and easily-read indicator and audible warning of an unsafe condition.

a. the material being dumped is subject to being stuck or caught in the trailer rather than exiting the bed freely, and
b. the dump site cannot be maintained in a nominally level condition (lateral slope less than 1° - 2°.

16.C CRANES AND DERRICKS - GENERAL

16.C.01 Unless otherwise specified, the requirements of this Section (16.C) are applicable to all cranes of the types listed in Table 16-1.

16.C.02 Every crane shall have the following documents with them at all times they are to be operated:

a. A copy of the operating manual developed by the manufacturer for the specific make and model of the crane; a copy of the operating manual for any crane operator aids with which the crane is equipped.

b. The load rating chart for the crane, which shall include:

(1) the crane make and model, serial number, and year of manufacturer;
(2) load ratings for all crane operating configurations, including optional equipment;
(3) recommended reeving for the hoist line; and
(4) operating limits in windy or cold weather conditions.

c. The crane's log book which shall be used to record operating hours and all crane inspections, tests, maintenance and repair. The log shall be updated daily as the crane is used and shall be signed by the operator and supervisor: service mechanics shall sign the log after conducting maintenance or repairs on the crane.

16.C.03 Responsibilities in crane operations.

a. The operator shall not engage in any activity which will divert his/her attention while operating the crane.

b. The operator shall respond to signals from the person who is directing the lift or an appointed signal person: when a signal person is not used in the crane operation, the operator shall ensure he/she has full view of the load and the load travel paths at all times the load is rigged to the crane.

c. Each operator is responsible for those operations under his direct control, including those items under (d), below: whenever there is any doubt as to safety, the operator shall consult his supervisor before commencing the operation.

d. Before a lift, except before critical lifts when these shall be done by the lift supervisor, the rigger shall ensure that:

(1) the crane is level and, where necessary, blocked,
(2) the load is well secured and balanced in the sling or lifting device before it is lifted more than a few inches,
(3) the lift and swing path is clear of obstructions and adequate clearance is maintained from electrical sources, and

(4) all persons are clear of the swing radius of the counterweight.

e. When two or more cranes are used to lift one load, one designated person shall be responsible for the operation.

(1) The designated person shall analyze the operation and instruct all personnel involved in the proper positioning, rigging of the load, and the movements to be made.

(2) The designated person shall make such determinations as the necessity to reduce crane ratings, load position, boom location, ground support, and speed of movement, which are required to safely make the lift.

(3) The designated person shall ensure that all prescribed communication (including signaling) personnel and/or equipment are on hand and properly functioning, and that all personnel involved with the crane operation understand the communication systems and their responsibilities associated with communications.

16.C.04 Operator designation.

a. Cranes and derricks may only be operated by qualified operators. Only those operators qualified to operate a particular type of crane or derrick may operate that type of machinery: proof of qualification shall be in writing.

b. Each USACE Command with USACE employees designated as crane or derrick operators shall designate a qualified individual(s) (in-house or contract) to administer examinations and to qualify USACE - but not contractor - operators.

c. Contractor crane and derrick operators shall be designated as qualified by a source which qualifies crane and derrick operators (e.g., an independent testing and qualifying company,

a union, a governmental agency, a qualified consultant (can be an in-house resource).

16.C.05 Operator qualifications and training.

a. Proficiency qualifications.

(1) Each operator shall be instructed in and qualified for each type of crane or derrick he/she is to operate.

(2) Qualification shall be by written (or oral) and practical operating examination unless the operator is licensed by a state or city licensing agency for the particular type of crane or derrick. (Qualification for operation of a particular type of crane or derrick on a Corps project shall be valid for three years.)
> See Appendix G

(3) As a minimum, the qualifying examination procedures in Appendix G shall be followed. When the crane manufacturer recommends operator qualifying examination procedures, those procedures shall be in addition to the requirements of Appendix G.

b. Operators shall meet the physical qualifications listed in Appendix G: at the minimum, examinations are required annually.

c. USACE crane and derrick operators (not contractor) shall complete a crane operators course which covers general crane operation and safety and is at least 24 hours in length. Yearly thereafter, operators shall complete an 8 hour refresher course covering safe operation of the type of crane or derrick they operate.

16.C.06 Cranes and derricks shall be designed and constructed in accordance with the applicable standards listed in Table 16-1.
> This requirement is applicable to all cranes and derricks manufactured and installations constructed, one year after

the date of publication of the applicable standard

16.C.07 Cranes and derricks shall be operated, inspected, tested and maintained in accordance with the manufacturer's operating manual for the crane.

16.C.08 A hazard analysis shall be developed and implemented for crane set-up and set-down procedures (mobilization, assembly or erection, dismantling, and demobilization).

16.C.09 Clearances.

a. Adequate clearance shall be maintained from electrical sources. ***> See Section 11***

b. Adequate clearance shall be maintained between moving and rotating structures of the crane and fixed objects to allow the passage of employees without harm: the minimum adequate clearance is 40 cm (16 in).

TABLE 16-1

CRANE DESIGN AND CONSTRUCTION STANDARDS

Mobile and locomotive cranes - ASME/ANSI B30.5
Portal, tower, and pillar cranes - ASME/ANSI B30.4
Hammerhead tower cranes - ASME/ANSI B30.3
Floating cranes and floating derricks - ASME/ANSI B30.8
Draglines - Power Crane and Shovel Association Std #4
Articulating boom cranes - ASME/ANSI B30.22
Overhead and gantry cranes (top running bridge, single or multiple girder, top running trolley hoist) - ASME/ANSI B30.2
Overhead and gantry cranes (top running bridge, single girder, underhung hoist) - ASME/ANSI B30.17
Monorails and underhung cranes - ASME/ANSI B30.11
Derricks - ASME/ANSI B30.6
Helicopter cranes - ASME/ANSI B30.12

c. Accessible areas within the swing radius of the rear of the crane's rotating superstructure, either permanently or temporarily mounted, shall be barricaded to prevent an employee from being struck or crushed by the crane.

16.C.10 Hoisting ropes shall be installed in accordance with the equipment manufacturer's recommendations.

a. Except for overhead and gantry cranes, there shall be at least three full wraps (not layers) of cable on the drums of hoisting equipment at all times; overhead and gantry cranes shall have at least two full wraps of cable on the drums of hoisting equipment at all times.

b. The drum end of the rope shall be anchored to the drum by an arrangement specified by the crane or rope manufacturer.

16.C.11 Communications.

a. A standard signal system shall be used on all cranes and derricks. ***> See Section 8***

b. In situations where the operator cannot see the load, audio (radio) communications shall be used (note that this does not preclude the use of hand signals in addition to audio): in all other operations, audio communications should be used.

16.C.12 Inspection of cranes and derricks shall be in accordance with the manufacturer's recommendations. Inspections shall be conducted by a qualified person and shall cover, at the minimum, the items listed in Appendix H.

a. Before initial use all new and altered cranes shall be inspected by a qualified person to ensure compliance with the applicable standards listed in 16.C.05.

b. Before initial use on a Corps project, and periodically thereafter (one to twelve months or as recommended by the

manufacturer) a periodic inspection shall be conducted by a qualified person.

(1) A copy of the checklist used for the inspection shall be maintained at the project site.

(2) A Corps of Engineers' representative shall be notified at least 24 hours before the inspection in order that he or she may observe the inspection.

c. Start-up (pre-operational) inspections shall be conducted by the operator before every operation (shift) of the crane. If checklists are used for pre-operational inspections, a copy of the checklist shall be maintained at the project site; if checklists are not used, the operator shall indicate the successful completion of the inspection - in accordance with the manufacturer's recommendations - in the operator's log.

d. Cranes not in use on a regular basis shall be inspected in accordance with the following. ***> See Appendix H***

(1) A crane which has been idle for 30 days or more, but less than 180 days, shall be given an inspection, conforming to the requirements for frequent crane inspections and frequent wire rope inspections, by a qualified person before placed in service.

(2) A crane which has been idle more than 180 days shall be given a complete inspection, conforming to the requirements for frequent and periodic crane inspections and frequent and periodic wire rope inspections, by a qualified person before placed in service.

(3) Standby cranes shall be inspected by a qualified person at least semiannually and before placed in service. Inspection requirements depend on the length of time since the previous inspection, in accordance with paragraphs (1) and (2) above; standby cranes which are exposed to adverse environmental conditions shall be inspected more frequently, as determined by

the designated authority.

16.C.13 Performance tests. ***> See also paragraph 16.D.06a***

a. Performance tests shall be conducted, by a qualified person, in accordance with the manufacturer's recommendations; at the minimum, performance testing shall meet the requirements listed in Appendix H. Test loads shall not exceed 100% of the manufacturer's load rating capacity chart at the configuration of the test except for manufacturer testing of new cranes, which shall be conducted in accordance with the ASME B30 standard appropriate for the crane.

b. Written reports of the performance test, showing test procedures and confirming the adequacy of repairs or alterations, shall be maintained with the crane or derrick or at the on-site project office.

c. Under the following circumstances, cranes shall be given an operational performance test:

(1) before initial use of cranes in which a load bearing (excluding the rope) or load controlling part or component, brake, travel component, or clutch have been altered, replaced, or repaired,
(2) every time it is reconfigured or reassembled after disassembly, and
(3) every year.

> Under conditions (1) and (2), a selective operational performance test - testing only those components which have or may have been affected by the alteration, replacement, repair, reconfiguration, or reassembly - may be performed

d. Under the following circumstances, cranes shall be given a load performance test:

(1) before initial use of cranes in which load bearing (excluding

the rope) or load controlling part or component, brake, travel component, or clutch have been altered, replaced, or repaired,
(2) every time the crane is reconfigured or reassembled after disassembly, and
(3) every four years.

> Under conditions (1) and (2), a selective operational performance test - testing only those components which have or may have been affected by the alteration, replacement, repair, reconfiguration, or reassembly - may be performed. When the load performance test of a powerhouse Indoor overhead crane would pose unacceptable risk to generators, the District Commander may waive this requirement.

16.C.14 The manufacturer's specifications and limitations applicable to the operation of any crane or derrick shall be followed: at no time shall a crane or derrick be loaded in excess of the manufacturer's rating, except overhead and gantry cranes in accordance with ASME/ANSI B30.2 when overrated loads shall not exceed 110% of rated load. ***> See 16.C.18***

a. Where manufacturer's specifications are not available, the limitations assigned to the equipment shall be based on the determinations of a registered engineer competent in this field and such determinations will be documented and recorded.

b. Attachments used with cranes shall not exceed the capacity, rating, or scope recommended by the manufacturer.

16.C.15 Riding on loads, hooks, hammers, buckets, material hoists, or other hoisting equipment not meant for personnel handling is prohibited.

16.C.16 When practical and when their use does not create a hazard, tag lines shall be used to control loads.

16.C.17 Whenever a slack line condition occurs, before further operations the proper seating of the rope in the sheaves and on the drum shall be checked.

16.C.18 Critical lift plans. Before making a critical lift, a critical lift plan shall be prepared by the crane operator, lift supervisor, and rigger. The plan shall be documented and a copy provided to the designated authority: the plan shall be reviewed and signed by all personnel involved with the lift.
> Critical lift is defined on page 285

a. The plan shall specify the exact size and weight of the load to be lifted and all crane and rigging components which add to the weight. The manufacturer's maximum load limits for the entire range of the lift, as listed in the load charts, shall also be specified.

b. The plan shall specify the lift geometry and procedures, including the crane position, height of the lift, the load radius, and the boom length and angle, for the entire range of the lift.

c. The plan shall designate the crane operator, lift supervisor and rigger and state their qualifications.

d. The plan will include a rigging plan which shows the lift points and describes rigging procedures and hardware requirements.

e. The plan will describe the ground conditions, outrigger or crawler track requirements, and, if necessary, the design of mats, necessary to achieve a level, stable foundation of sufficient bearing capacity for the lift. For floating cranes or derricks, the plan shall describe the operating base (platform) condition and any potential list.

f. The plan will list environmental conditions under which lift operations are to be stopped.

g. The plan will specify coordination and communication

requirements for the lift operation.

h. For tandem or tailing crane lifts, the plan will specify the make and model of the cranes, the line, boom, and swing speeds, and requirements for an equalizer beam.

16.C.19 Environmental considerations.

a. Cranes shall not be operated when wind speeds at the top of the crane approach the maximum wind velocity recommendations of the manufacturer.

b. Operations undertaken during weather conditions that produce icing of the crane structure or reduced visibility should be performed at reduced functional speeds and with signaling means appropriate to the situation.

c. When conditions are such that lightning could occur, all crane operations shall cease.

d. For night operations, lighting shall be adequate to illuminate the working areas while not interfering with the operators vision.

16.C.20 Maintenance and repairs.

a. Maintenance and repairs shall be conducted in accordance with the manufacturer's procedures and precautions.

b. Replacement parts or repairs shall have at least the original design factor; replacement parts for load bearing and other critical parts shall be either obtained from or certified by the original equipment manufacturer (OEM).

16.D CRAWLER-, TRUCK-, WHEEL-, AND RINGER-MOUNTED CRANES

16.D.01 All lattice boom and hydraulic mobile cranes (except articulating boom cranes) shall be equipped with a boom angle

indicator and a load indicating device, or a load moment indicator (rated capacity indicator): calibration and testing of indicators will be performed in accordance with the manufacturer's recommendations. ***> When cranes are used in duty cycle operations they are exempt from the requirements for load indicating devices and load moment indicators***

16.D.02 All lattice boom and hydraulic mobile cranes shall be equipped with a means for the crane operator visually to determine the levelness of the crane.

16.D.03 On all lattice boom and hydraulic mobile cranes (except articulating boom cranes), drum rotation indicators shall be provided and located to afford sensing by the operator.
> Equipment manufactured before 1990 is exempt from this requirement but retrofit is highly recommended

16.D.04 All lattice boom and hydraulic mobile cranes (except articulating boom cranes) shall be equipped with a boom angle or radius indicator located within the operator's view.

16.D.05 Anti-two block (upper limit) devices. When required on a crane, anti-two blocking devices are required for all points of two-blocking.

a. Lattice boom cranes shall be equipped with an anti-two block device to stop the load hoisting function before the load block or load contacts the boom tip.

b. Lattice boom cranes which are used exclusively for duty cycle operations are exempt from anti-two block equipment requirements. When a lattice boom crane engaged in duty cycle work is required to make a non-duty cycle lift (for example, to lift a piece of equipment), it will be exempt from the anti-two block equipment requirements if the following procedures are implemented:

(1) an international orange colored warning device (warning flag,

warning tape, or warning ball) is properly secured to the hoist line at a distance of 2.4 m to 3 m (8 ft to 10 ft) above the rigging;
(2) the signalperson acts as a spotter to alert the crane operator with a "STOP" signal when the warning device approaches the boom tip and the crane operator ceases hoisting functions when alerted of this;
(3) while the non-duty cycle lift is underway, the signalperson shall not stand under the load, shall have no duties other than as a signalperson, and shall comply with the signaling requirements of this manual.

c. For older lattice boom cranes with manually-activated friction brakes, due to cost prohibitions anti-two block warning devices may be used in lieu of anti-two block prevention devices. Such exemptions shall be approved by either the USACE Command or HQUSACE Safety and Occupational Health Office.

d. Telescopic boom cranes shall be equipped with an anti-two block device to stop the load hoisting function before the load block or load contacts the boom tip and to prevent damage to the hoist rope or other machine components when extending the boom.

e. Telescopic boom cranes which are used exclusively for duty cycle operations shall be equipped with a two-blocking damage prevention feature or warning device to prevent damage to the hoist rope or other machine components when extending the boom.

Articulating boom cranes are exempt from requirements of 16.D.05a, 16.D.05c, and 16.D.05d

16.D.06 All mobile cranes with cable-supported booms shall be equipped with:

a. Boom stops which, at the angle specified by the crane manufacturer, limit the movement of that portion of the boom

below the point at which the boom stop acts on the boom.

(1) The boom stop manufacturer shall certify that the boom stop has been designed, manufactured, and functionally tested such that it will fulfill the requirement of SAE J220, *Crane Boom Stops*. (Pre 1971 cranes will essentially meet the requirements of SAE J220 except for paragraph 4.1.)

(2) A crane boom stop field test will be conducted to verify the proper setup of the boom stops and functioning of the boom hoist disengaging device. This test will be conducted before initiating the performance test required by paragraphs 16.C.13. Deficiencies noted shall be corrected before the performance test. ***> See Appendix I for test procedures***

b. All jibs shall have positive stops to prevent their movement of more than 5° above the straight line of the jib and boom on conventional crane booms.

c. A properly functioning boom hoist disengaging device which shall automatically and completely disengage the boom hoisting power from the boom hoist drum when the boom has reached its highest rated angle. When power is thus disengaged, the boom hoist drum shall automatically be restrained from motion in the lowering direction under any rated condition.

16.D.07 The crane's foundation shall be evaluated for stability. The evaluation shall consider ground conditions, static and dynamic loads, and operating quadrants. Cribbing shall be provided in accordance with the manufacturer's recommendations.

16.D.08 Boom assembly and disassembly.

a. The manufacturer's boom assembly and disassembly procedures shall be followed. The manufacturer's boom assembly and disassembly procedures shall be reviewed by all members of the assembly/disassembly team before assembly

and disassembly.

b. When removing pins or bolts from a boom, workers shall stay out from under the boom.

16.D.09 Outriggers.

a. When the load to be handled and/or the operating radius require the use of outriggers, or anytime when outriggers are used, outriggers shall be fully extended and set to remove the machine weight from wheels (except locomotive cranes).

b. When outrigger floats are used they shall be securely attached to the outriggers.

c. Blocking under outriggers floats shall meet the following requirements:

(1) sufficient strength to prevent crushing, bending, or shear failure,
(2) such thickness, width, and length as to completely support the float, transmit the load to the supporting surface, and prevent shifting, toppling, or excessive settlement under load, and
(3) use of blocking only under the outer bearing surface of the extended outrigger beam floats.

16.D.10 Unless the manufacturer has specified an on-rubber rating, mobile cranes shall not pick or swing loads over the side of the crane unless the outriggers (if so equipped) are down and fully extended.

16.D.11 Unless recommended against by the manufacturer, crane booms shall be lowered to ground level or secured against displacement by wind loads or other outside forces when not in use: if the manufacturer recommends against this practice, the manufacturer's recommended practice shall be followed.

16.E PORTAL, TOWER, AND PILLAR CRANES

16.E.01 All load bearing foundations, supports, and rail tracks shall be constructed or installed in accordance with the crane manufacturer's recommendations and the applicable ANSI/ASME standard.

16.E.02 Cranes shall be erected in accordance with the crane manufacturer's recommendations and the applicable ANSI/ASME standard.

a. The manufacturer's written erection instructions and a list of the weights of each component to be erected shall be kept at the site.

b. Erection shall be performed under the supervision of a qualified person.

c. An activity hazard analysis shall be developed <u>and implemented</u> for the erection procedures. The analysis will include a plan which shows:

(1) the location of the crane and adjacent buildings or towers, overhead power and communication lines, underground utilities;
(2) foundation design and construction requirements, and
(3) when the tower is erected within a structure, the plan shall show clearances between the tower and the structure and bracing and wedging requirements

d. Wind velocity at the site at the time of erection shall be a consideration and may be a limiting factor that could require suspending the erection operation.

e. Before crane components are erected, they shall be visually inspected for damage. Damaged members shall not be erected.

16.E.03 After erection, and before placing the crane in service,

the following shall be tested in accordance with the manufacturer's recommended procedures and ANSI/ASME B30.3 or B30.4, as applicable.

a. crane supports;
b. brakes and clutches, limit and overload switches, and locking and safety devices; and
c. load hoisting and lowering, boom hoisting and lowering, and swing motion mechanisms and procedures.

16.E.04 A boom angle or radius indicator shall be provided within the operator's view.

16.E.05 Luffing jib cranes shall be equipped with jib stops of a shock absorbing type, a jib hoist limit switch, and a jib angle indicator visible to the operator.

16.E.06 Rail clamps, if used, shall have slack between the point of attachment to the rail and the end fastened to the crane: rail clamps shall not be used as a means of restraining tipping of a crane.

16.E.07 Raising (climbing or telescoping) hammerhead tower cranes.

a. The operator of a hammerhead tower crane shall be present during climbing or telescoping operations.

b. Hammerhead cranes shall not be climbed or telescoped when wind speeds at the top of the crane exceed 0.9 m/s (20 mph) or as recommended by the manufacturer.

c. Climbing operations shall not be commenced until all support provisions required at the new support level are in place and as specified by a qualified person.

16.E.08 Tower cranes shall weathervane when left unattended;

luffing jib cranes shall have the boom elevated to 15° when left unattended.

16.F FLOATING CRANES AND FLOATING DERRICKS

16.F.01 Construction.

a. Floating cranes and floating derricks shall be constructed to meet all stresses imposed on members and components:

(1) under normal operating conditions when installed, and
(2) when handling loads not exceeding manufacturer's load ratings with recommended reeving.

b. Barges and pontoons shall be constructed to withstand imposed loads.

16.F.02 The load rating of a floating crane or floating derrick shall be the maximum working loads at various radii as determined by the manufacturer or qualified person considering list and trim for each installation.

a. The load rating is dependant upon the structural competence of the crane or derrick, rope strength, hoist capacity, structural attachment to the floating platform, and stability and freeboard of the floating platform.

b. When deck loads are to be carried while lifting, the situation shall be analyzed for modified ratings.

c. When mounted on barges or pontoons, the rated loads and radii of land cranes and derricks shall be modified as recommended by the manufacturer.

16.F.03 Stability - operating list or trim. Unless the crane or derrick manufacturer recommends a lesser value, the following

shall be the maximum allowable list or trim:

a. Cranes, designed for barge or pontoon mounting, rated at 22,700 kg (25 tons) capacity or less shall have a maximum allowable list or trim of 5°.

b. Cranes, designed for barge or pontoon mounting, rated at 22,770 kg (25 tons) capacity or more shall have a maximum allowable list or trim of 7°, although 5° is recommended.

c. Derricks, designed for barge or pontoon mounting, rated at any capacity shall have a maximum allowable list or trim of 10°.

d. Land cranes and derricks mounted on barges or pontoons shall have a maximum allowable list or trim of 5°.

16.F.04 Stability - design load conditions.

a. Cranes or derricks designed for barge of pontoon mounting shall be stable under the following conditions:

(1) rated load, 2.7 m/s (60 mph) wind, 0.6 m (2 ft) minimum freeboard;
(2) rated load plus 25%, 2.7 m/s (60 mph) wind, 0.3 m (1 ft) minimum freeboard;
(3) high boom, no load, 2.7 m/s (60 mph) wind, 0.6 m (2 ft) minimum freeboard;
(4) for backward stability of the boom - high boom, no load, full back list (least stable condition), 4 m/s (90 mph) wind.

b. Land cranes and derricks mounted on barges or pontoons:

(1) Barge- or pontoon-mounted land cranes require modified ratings due to increased loading from list, trim, wave action, and wind: this rating will be different for each size of pontoon or barge used. Therefore, the load rating of barge- or pontoon-mounted land cranes and derricks shall not exceed that recommended by the manufacturer for the particular barge

or pontoon under the expected environmental conditions.

(2) All deck surfaces of the pontoon or barge shall be above the water.

(3) The entire bottom area of the barge or pontoon shall be submerged.

(4) Provide tie-downs for derricks to transmit the loading to the barge or pontoon.

(5) Cranes shall be blocked and secured to prevent shifting.

16.F.05 Environmental considerations.

a. The project supervisor shall obtain daily weather forecasts before beginning work and as frequently thereafter as required to monitor any potential weather problems. ***> See Section 19.A***

b. When a local weather storm warning exists, consideration shall be given to the recommendations of the manufacturer for securing the crane.

c. Work shall be halted when significant wave action exists.

16.F.06 Truck and crawler cranes shall be attached to the barge or pontoon by means of a slack tie-down system to tether the machines' travel: when stability of the barge or pontoon is not a factor and control barriers are provided, limited travel, as specified in an activity hazard analysis, may be authorized by the designated authority.

16.F.07 When loads approach the maximum rating of the crane or derrick, the person responsible for the job shall ascertain that the weight of the load has been determined within +/- 10% before it is lifted.

16.F.08 When operating in windy conditions or rough seas, the

rated load shall be reduced to allow for the wind and wave effect on the lifted load. ***> See also 16.C.18***

16.G OVERHEAD AND GANTRY CRANES

16.G.01 All load bearing foundations, anchorages, runways, and rail tracks shall be constructed or installed in accordance with the crane manufacturer's recommendations and ANSI/ASME B30.2 or B30.17, as applicable.

16.G.02 The rated load of the crane shall be plainly marked on each side of the crane.

a. If the crane has more than one hoisting unit, each hoist shall have its rated load marked on it or its load block.

b. Markings on the bridge, trolley, and load block shall be legible from the ground or floor.

16.G.03 Clearance shall be maintained between the crane, any structure or object, and any parallel running cranes and cranes operating at different elevations.

16.G.04 Contacts with runway stops or other cranes shall be made with extreme caution: the operator shall do so with particular care for the safety of persons on or below the crane, and only after making certain that any persons on the other cranes are aware of what is being done.

16.G.05 Operators of outdoor cranes shall secure them when leaving.

16.G.06 When the wind-indicating alarm of a cab-operated outdoor crane sounds, crane operations shall be discontinued and the crane shall be prepared and stored for excessive wind conditions.

16.H MONORAILS AND UNDERHUNG CRANES

16.H.01 Crane runways, monorail tracks, track supports, and track control devices shall be constructed or installed in accordance with the crane manufacturer's recommendations and ANSI/ASME B30.11.

16.H.02 The rated load of the crane shall be plainly marked on each side of the crane.

a. If the crane has more than one hoisting unit, each hoist shall have its rated load marked on it or its load block.

b. Markings on the bridge, trolley, and load block shall be legible from the ground or floor.

16.I DERRICKS

16.I.01 For permanent fixed locations, the owner shall provide the following load anchoring data (for nonpermanent installations, this data shall be determined by a qualified person):

a. Guy derricks.

(1) maximum horizontal and vertical forces when handling rated loads with the particular guy slope and spacing stipulated for the application, and
(2) maximum horizontal and vertical forces at the guys when handling rated loads with the particular guy slope and spacing stipulated for the application.

b. Stiffleg derricks.

(1) maximum horizontal and vertical forces at the mast base when handling rated loads with the particular stiffleg slope and spacing stipulated for the application, and
(2) maximum horizontal and vertical forces at the stifflegs when handling rated loads with the particular stiffleg arrangement

stipulated for the application.

16.I.02 Derrick booms, load hoists, and swinger mechanisms shall be suitable for the derrick work intended and shall be anchored to prevent displacement from imposed loads.

16.I.03 When rotating a derrick, sudden starts and stops shall be avoided and rotational speed shall be such that the load does not swing out beyond the radius at which it can be controlled: a tagline shall be used.

16.I.04 Boom and hoisting rope systems shall not be twisted.

16.I.05 Ropes shall not be handled on a winch head without the knowledge of the operator: when a winch head is being used, the operator shall be within reach of the power unit controls.

16.I.06 When securing the boom, dogs or other positive holding mechanisms on the hoist shall be engaged.

16.I.07 When not in use the derrick boom shall be either:

a. laid down,
b. secured to a stationary member as nearly under the head as possible by attachment of a sling to the load block;
c. lifted to a vertical position and secured to the mast (for guy derricks), or
d. secured against a stiffleg (for stiffleg derricks).

16.J HELICOPTER CRANES

16.J.01 Helicopter cranes shall comply with regulations of the Federal Aviation Administration.

16.J.02 Before each day's operation, a briefing shall be conducted to set forth the plan of operation for the pilot and ground personnel.

16.J.03 Loads shall be properly slung.

a. Tag lines shall be of a length that will not permit their being drawn up into rotors.

b. Pressed sleeve, swedged eyes, or equivalent means shall be used for all freely suspended loads to prevent hand splices from spinning open or cable clamps from loosening.

16.J.04 All electrically operated cargo hooks shall have the electrical activating device so designed and installed as to prevent inadvertent operation.

a. In addition, these cargo hooks shall be equipped with an emergency mechanical control for releasing the load.

b. The hooks shall be tested prior to each day's operation to determine that the release functions properly, both electrically and mechanically.

16.J.05 PPE equipment for employees receiving the load shall consist of eye protection and hard hats secured by chinstraps.

16.J.06 Loose-fitting clothing likely to flap in the downwash, and thus be snagged on hoist line, shall not be worn.

16.J.07 Every practical precaution shall be taken to provide for the protection of the employees from flying objects in the rotor downwash: all loose gear within 30 m (100 ft) of the place of lifting or depositing the load, and all other areas susceptible to rotor downwash shall be secured or removed.

16.J.08 The helicopter pilot shall be responsible for size, weight, and manner in which loads are connected to the helicopter: if, for any reason, the helicopter pilot believes the lift cannot be made safely, the lift shall not be made.

16.J.09 When employees are required to work under hovering

craft, safe access shall be provided for employees to reach the hoist line hook and engage or disengage cargo slings: employees shall not work under hovering craft except to hook, unhook, or position loads.

16.J.10 Static charge on the suspended load shall be dissipated with a grounding device before ground personnel touch the suspended load, or protective rubber gloves shall be worn by all ground personnel touching the suspended load.

16.J.11 The weight of an external load shall not exceed the rated capacity.

16.J.12 Hoist wires or other gear, except for pulling lines or conductors that are allowed to "pay out" from a container or roll off a reel, shall not be attached to any fixed ground structure or allowed to foul on any fixed structures.

16.J.13 When visibility is reduced by dust or other conditions, ground personnel shall exercise special caution to keep clear of main and stabilizing rotors: precautions shall also be taken to eliminate reduced visibility.

16.J.14 No unauthorized person shall be allowed to approach within 15 m (50 ft) of the helicopter when the rotor blades are turning.

16.J.15 Whenever approaching or leaving a helicopter with blades rotating, all employees shall remain in full view of the pilot and keep in a crouched position: employees shall avoid the area from the cockpit or cabin rearward unless authorized by the helicopter pilot to work there.

16.J.16 There shall be constant reliable communication between the pilot and a designated employee of the ground crew who acts as a signalperson during loading and unloading. This signalperson shall be distinctly recognizable from other ground personnel. ***> See Figure 8-9***

16.J.17 Good housekeeping shall be maintained in all helicopter loading and unloading areas.

16.K MATERIAL HOISTS

16.K.01 Material hoists shall be designed and constructed or installed in accordance with the requirements of ANSI A10.5.

16.K.02 Material hoist towers, masts, guys or braces, counterweights, drive machinery supports, sheave supports, platforms, supporting structures, and accessories shall be designed by a licensed engineer.

16.K.03 Hoist towers shall be erected and dismantled only under the direct supervision of a qualified individual.

16.K.04 A copy of the hoist operating manual shall be available at all times it is operated.

16.K.05 Material hoists and hoist tower systems shall be inspected in accordance with the manufacturer's recommendations.

a. Prior to initial use and each time after the tower is extended, all parts of the tower or mast, cage, bucket, boom, platform, hoisting machine, guys, and other equipment shall be inspected by a qualified person to ensure compliance with the manufacturer's inspection guidelines and ANSI A10.5.

b. Prior to initial use on a USACE project, and periodically thereafter (one to twelve months or as recommended by the manufacturer) a periodic inspection shall be conducted by a qualified person. Periodic inspections shall cover those items specified by the manufacturer: at the minimum, periodic inspections shall cover all sheaves, racks and pinions, guy ties, bolt connections, miscellaneous clamps, braces, and similar parts.

c. A USACE representative shall be notified at least 24 hours prior to any of the above inspections and may wish to accompany the contractor's inspector.

d. Pre-operational inspections (start-up procedures) shall be conducted by the operator prior to every operation (shift) of the hoist.

16.K.06 Before a hoist is placed in service and every 4 months thereafter, a car-arresting-device test shall be performed.

a. For rope-supported cars, the test shall be conducted in the following manner:

(1) pull a loop in the lifting rope and attach the test rope to each side of the loop above the bucket or platform,
(2) raise the platform or bucket to allow the load to be supported by the test rope,
(3) cut the test rope to allow the load to fall and activate the car-arresting device.

b. For car suspension other than rope supported, the test shall be conducted by creating an overspeed condition of the car.

c. Structural components shall be inspected for damage after the test and before the hoist is placed in operation again.

16.K.07 Maintenance and repairs.

a. Replacement parts for load bearing or critical components shall be either obtained from or certified by the equipment manufacturer.

b. Maintenance and repairs shall be conducted in accordance with the manufacturer's precautions and procedures.

16.K.08 Landings and runways.

a. Landing platforms and runways that connect the hoistway or tower to a structure shall be designed and constructed to sustain the maximum intended load without failure.

b. Floors or platforms which may become slippery shall have slip-resistant surfaces.

c. When workers may be exposed to falling objects, overhead protection, composed of 5 cm (2 in) planking or the equivalent, shall be provided.

d. A barricade shall be provided at the open ends of each landing: the barricade shall extend from the floor a distance of at least 0.9 m (36 in) and shall be of #19 US gage wire or the equivalent, with openings not exceeding 1.3 cm (0.5 in).

e. Material shall not be stored on landing platforms or runways.

16.K.09 Whenever a slack line condition occurs, prior to further operations the proper seating of the rope in the sheaves and on the drum shall be checked.

16.K.10 Hoisting ropes shall be installed in accordance with the equipment manufacturer's recommendations.

a. There shall be at least three full wraps of cable on the drums of hoisting equipment at all times.

b. The drum end of the rope shall be anchored to the drum by an arrangement specified by the crane or rope manufacturer.

16.K.11 Riding on material hoists or other hoisting equipment not meant for personnel handling is prohibited.

16.K.12 While hoisting equipment is in operation, the operator shall not perform any other work and shall not leave his/her

position at the controls until the load has been safely landed or returned to ground level.

16.K.13 Not more than one cage or bucket shall be operated at the same time by any one hoisting machine or operator.

16.K.14 Operating rules shall be established and posted at the operator's station of the hoist: such rules shall include signal system and allowable line speed for various loads. Rules and notices shall be posted on the car frame or crosshead in a conspicuous location, including the statement **"NO RIDERS ALLOWED."**

16.K.15 Air powered hoists shall be connected to an air supply of sufficient capacity and pressure to safely operate the hoist: pneumatic hoses shall be secured by some positive means to prevent accidental disconnection.

16.L PILEDRIVERS

16.L.01 Guys, outriggers, thrustouts, counter-balances, or rail clamps shall be provided to maintain stability of piledriver rigs.

16.L.02 Piledriver leads.

a. Swinging (hanging) leads.

(1) Swinging (hanging) leads shall have fixed ladders.

(2) Employees shall be prohibited from remaining on leads or ladders while pile is being driven.

b. Fixed leads.

(1) Fixed piledriver leads shall be provided with decked landings having guard rails, intermediate rails, and toeboards. Fixed ladders or stairs shall be provided for access to landings and head blocks.

(2) Fixed leads shall be provided with rings or attachment points so that workers exposed to falls of 1.8 m (6 ft) or greater may attach their safety belt lanyard to the leads.

c. Landings or leads shall not be used for storage of any kind.

d. Piledriver leads shall have stop blocks to prevent the hammer from being raised against the head block.

e. A blocking device, capable of supporting the weight of the hammer, shall be provided for placement in the leads under the hammer at all times while employees are working under the hammer.

f. Leads shall be free of projections or snags to minimize line damage and personnel safety hazards.

16.L.03 Dogs, on piledriver hoist drums, which automatically disengage when the load is relieved or the drum rotated shall be prohibited.

16.L.04 Guards shall be provided across the top of the head block to prevent cable from jumping out of the sheaves.

16.L.05 All hose connections to piledriver hammers, pile ejectors, or jet pipes shall be securely attached with an adequate length of at least 0.6 cm (1/4 in) alloy steel chain, having 1,500 kg (3,250 lbs) working load limit, or equal strength cable, to prevent whipping if the joint is broken.

16.L.06 Steam line controls shall consist of two shutoff valves, one of which shall be a quick-acting lever type within easy reach of the hammer operator.

16.L.07 Floating piledrivers.

a. The width of hulls of floating piledrivers shall not be less than 45% of the height of the lead above the water.

b. The operating deck of floating piledrivers shall be so guarded as to prevent piles which are being hoisted into driving position from swinging in over the deck.

16.L.08 Hoisting and moving pile.

a. All employees shall be kept clear when piling is being hoisted into the leads.

b. Hoisting of steel piling shall be done by use of a closed shackle or other positive attachment that will prevent accidental disengagement.

c. Taglines shall be used for controlling unguided piles and free-hanging (flying) hammers.

d. Hammers shall be lowered to the bottom of the leads while the piledriver is being moved.

16.L.09 When driving jacked piles, all access pits shall be provided with ladders and bulkheaded curbs to prevent material from falling into the pit.

16.L.10 When it is necessary to cut off the tops of driven piles, piledriving operations shall be suspended except where the cutting operations are located at least twice the length of the longest pile from the driver.

16.L.11 Pile extraction.

a. If piling cannot be pulled without exceeding the load rating of equipment, a pile extractor shall be used.

b. When pulling piling, crane booms shall not be raised more than 60° above the horizontal.

c. Piling shall not be pulled by tipping the crane, releasing the load brake momentarily, and catching the load before the crane

has settled.

16.M DRILLING EQUIPMENT

16.M.01 Applicability: the requirements of this Section (16.M) are applicable to rock, soil, and concrete drilling operations.

16.M.02 Earth drilling equipment shall be operated, inspected, and maintained as specified in the manufacturer's operating manual: a copy of the manual will be available at the job site.

16.M.03 Prior to bringing earth drilling equipment on the job site, a survey shall be conducted to identify overhead electrical hazards and potential ground hazards, such as contact with unexploded ordnance, hazardous agents in the soil, or underground utilities.

a. The location of any overhead or ground hazards shall be identified on a site layout plan.

b. The findings of this survey and the controls for all potential hazards shall become a part of the hazard analysis for the activity.

16.M.03 The hazard analysis for an earth drilling activity will not be accepted unless:

a. it contains a copy of the MSDS for the drilling fluids, if required;
b. it meets the requirements of 01.A.09; and
c. it indicates that the site layout plan specified in 16.M.02 will become a part of the analysis, and will be covered at the preparatory inspection (pre-activity safety briefing), when the plan has been completed.

16.M.04 Training.

a. All members of drilling crews shall be trained in:

(1) the operation, inspection, and maintenance of the equipment,
(2) the safety features and procedures to be used during operation, inspection, and maintenance of the equipment, and
(3) overhead electrical line and underground hazards.

b. This training will be based on the equipment operating manual and the hazard analysis for the activity.

16.M.05 Earth drilling equipment shall be equipped with two easily-accessible emergency shutdown devices, one for the operator and one for the helper.

16.M.06 Clearance from electrical sources shall be as specified in 11.E.05.

a. Drilling equipment shall be posted with signs warning the operator of electrical hazards.

b. The equipment operator shall ascertain proper clearance before moving equipment. Clearance shall be monitored by a spotter or by an electrical proximity warning device.

16.M.07 Moving equipment.

a. Before earth drilling equipment is moved the travel route shall be surveyed for overhead and terrain hazards, particularly overhead electrical hazards.

b. Earth drilling equipment shall not be transported with the mast up. The exception is movement of the equipment required in drilling a series of holes, such as in blasting, if the following conditions are satisfied:

(1) movement is over level, smooth terrain;
(2) the path of travel has been inspected for stability and the absence of holes, other ground hazards, and electrical hazards; and

(3) the travel distance is limited to short, safe distances.

16.M.08 Equipment set-up.

a. Equipment shall be set-up on stable ground and maintained level: cribbing shall be used when necessary.

b. Outriggers shall be extended per the manufacturer's specifications.

c. When drilling equipment is operated in areas with the potential for classification as a confined space, the requirements of Section 6.1 shall be followed.

16.M.09 Equipment operation.

a. Weather conditions shall be monitored: operations shall cease during electrical storms or when electrical storms are imminent.

b. Drill crew members shall not wear loose clothing, jewelry, or equipment which might become caught in moving machinery.

c. Auger guides shall be used on hard surfaces.

d. The operator shall verbally alert employees and visually ensure employees are clear from dangerous parts of equipment before starting or engaging equipment.

e. The discharge of drilling fluids shall be channeled away from the work area to prevent the ponding of water.

f. Hoists shall be used only for their designed intent and shall not be loaded beyond their rated capacity. Steps shall be taken to prevent two-blocking of hoists.

g. The equipment manufacturer's procedures shall be followed if rope becomes caught in, or objects pulled into, a cathead.

h. Drill rods shall be neither run nor be rotated through rod slipping devices: no more than 0.3 m (1 ft) of drill rod column shall be hoisted above the top of the drill mast. Drill rod tool joints shall not be made up, tightened, or loosened while the rod column is supported by a rod slipping device.

I. Dust shall be controlled. When there is potential for silica exposure, the requirements contained in Appendix C shall be implemented.

j. Augers shall be cleaned only when the rotating mechanism is in neutral and the auger stopped: long-handled shovels shall be used to move cutting from the auger.

k. Open boreholes shall be capped and flagged; open excavations shall be barricaded.

l. Means (e.g., guard around the auger; barricade around the perimeter of the auger; electronic brake activated by a presence-sensing device) shall be provided to guard against employee contact with the auger.

m. The use of side-feed swivels collars on drill rods are restricted to those collars which are retained by either a manufacturer-design stabilizer or a stabilizer approved by a professional engineer.

DEFINITIONS

Altered: any change to the original manufacturer's design configuration. These are (1) replacement of weight-handling equipment parts and components with parts or components not identical with the original (i.e., change in material, dimensions, or design configuration); (2) the addition of parts or components not previously a part of the equipment; (3) the removal of components which were previously a part of the load handling equipment; and (4) rearrangement of original parts or components.

Anti-two block (upper limit) device: a device which is activated by two-blocking and disengages the particular function whose movement is causing the two-blocking.

Articulating boom crane: a crane consisting of a mainframe or base, rotating mast, boom, and one or more operator's stations. The crane can be stationary or mounted on a vehicle, track, locomotive, etc., and is used to lift, swing, and lower loads.

Boom stop: a device used to limit the angle of the boom at the highest recommended position.

Bridge: that part of a gantry or overhead crane which carries the trolley(s).

Cathead: a spool shaped attachment on a winch around which rope is wound for hoisting and pulling.

Crane operator aids: devices which are used to assist a crane operator in the safe operation of the crane, including: two-block warning devices, two-block prevention devices, load and load moment indicator devices, boom angle and radius indicators, boom and jib stops, boom hoist disengaging devices, limit switches, drum rotation indicators, etc.

Cribbing: a system of timbers, arranged in a rectangular pattern, used to support and distribute the weight of equipment.

Critical lift: a non-routine crane lift required detail planning and additional or unusual safety precautions. Critical lifts include lifts made when the load weight is 75% of the rated capacity of the crane; lifts which require the load will be lifted, swung, or placed out of the operator's view; of lifts made with more than one crane; lifts involving non-routine or technically difficult rigging arrangement; hoisting personnel with a crane or derrick; or any lift which the lift or crane operator believe should be considered critical.

Derrick: a lifting device consisting of a mast secured at the top by guys or braces and, with or without a boom, used with a hoisting mechanism and rigging.

Dragline: a bucket attachment for a crane which excavates by the crane drawing, with a cable, the bucket towards itself.

Drilling fluid (mud): fluid which is pumped into a drilled hole and used to wash cuttings from the hole: drilling mud is a type of drilling fluid made of a slurry of clay and water and which is used to coat and support the sides of the drill hole and seal off permeable strata.

Duty cycle: operations involving repetitive pick and swing, such as with a dragline, grapple, or clamshell: such operations are conducted primarily for production as opposed to placement.

Fixed lead: pile driving leads which are rigidly attached to a boom by horizontal struts extending from the leads to extended boom foot pins, thus providing a fixed triangular frame of boom, struts, and leads.

Gantry crane: a crane similar to an overhead crane except that the bridge is rigidly supported on two or more legs running on fixed rails or other runway.

Guy derrick: a fixed derrick consisting of a vertical mast capable of being rotated 360 (but not continuous rotation) supported by guys, and a boom which is pivoted at the bottom and capable of moving in a vertical plane; a reeved rope between the head (top) of the mast and the boom harness (at the boom point) allows lifting and lowering of the boom and a reeved rope from the boom point allows lifting and lowering of the load.

Hammerhead tower crane: a lifting machine arranged with a tower (mast), an upperstructure that rotates, a horizontally-extended load jib (boom) with trolley, and a counterweight jib extending in the direction opposite of the load jib:

neither jib are arranged for luffing. The trolley on the load jib traverses the length of the jib and contains the sheaves and accessory parts which make up the upper load block; the lower load block is suspended from the trolley.

Jib: on hammerhead cranes, the horizontal structural member attached to the rotating superstructure of a crane and upon which the load trolley travels; on mobile cranes, an extension attached to the boom to provide added boom length for lifting specified loads.

Lead: the device on a pile driver which maintains the hammer in position during the driving. A lead typically is made up to two vertical rails or guides, held together by a frame, in which the hammer moves vertically.

Lift supervisor: the person designated to be in charge of crane lifting; this may be the crane operator or an individual whose function it is to supervise lifting operations.

List: the angle of inclination about the longitudinal axis of a vessel.

Live boom: a boom which is lowered by free-fall rather than controlled boom lowering under power.

Load block: an assembly of hook or shackle, swivel, pins, and frame.

Load moment indicator (rated capacity indicator): a device which indicates the bending moment on a crane by measuring both the load on a boom and the horizontal distance from the load (boom point) to the crane's axis of rotation. Load moment indicators are often equipped with warning devices or disengaging devices which are actuated before a crane is overloaded.

Load performance test: a test of a crane's performance, structural competence, and stability while lifting at a percentage of

its rated load capacity.

Locomotive crane: a crane mounted on a base or car equipped for travel on a railroad track.

Long-bed end-dump trailer: a trailer with a length of 9 m (30 ft) or more, a length-to-width ratio of or exceeding 4:1, and which is used to transport and dump material.

Luffing jib crane: a type of jib on a tower crane which is pivoted at the jib foot and supported by luffing cables. The hoist rope usually passes over a sheave at the jib point and the hook radius is changed by luffing, or changing the angle of inclination, of the jib. Rear pivoted luffing jibs are similar but the pivot is towards the rear of the top of the tower rather than at the jib foot.

Mobile crane: a crane mounted on a truck or crawler.

Monorail: a single run of overhead track.

Operational performance test: a test, conducted without a test load, to determine the proper operation of a crane.

Outrigger: extendable or fixed structural members with one end attached to the base of a piece of equipment and the other end resting on floats on the ground: used to distribute loads in supporting equipment.

Outrigger float: the pedestal (or bearing pad) on which an outrigger beam is supported.

Overhead crane: a crane with a single- or multiple-girder movable bridge or fixed hoisting mechanism and traveling on an overhead fixed runway structure.

Performance test: a test to determine the proper operation of a crane and the ability of the crane to safely lift loads within its performance rating. A performance test includes operational

performance tests and load performance tests.

Pillar crane: a fixed crane consisting of a vertical member, held in position at its base to resist overturning moment, and normally with a constant-radius revolving boom supported at the outer end by a tension member.

Portal crane: a crane consisting of a rotating superstructure with operating machinery and boom, all of which is mounted on gantry structure, usually with a portal opening between the gantry columns or legs for traffic to pass through; may be fixed or traveling.

Reconfiguration: the addition or subtraction of boom, jib, counterweight or, for a fixed crane, a change in foundation.

Saddle-jib: a type of jib on a tower crane which is supported by pendants. The jib is horizontal or nearly horizontal, non-luffing, and the load hook is suspended by a trolley which moves along the jib.

Standby crane: a crane which is not in regular service but which is used occasionally or intermittently as required.

Stiffleg derrick: a derrick similar to a guy derrick except that the mast is supported or held in place by two or more stiff members (stifflegs) which are capable of resisting either tensile or compressive forces. Sills are generally provided to connect the lower ends of the stifflegs to the foot of the mast.

Swinger mechanism: the device which rotates a derrick mast.

Swinging (hanging) lead: pile driving leads which are suspended from an extended boom point sheave pin at the top of the boom. The bottom points of the leads are positioned astride the pile location, the hammer is vertically above the top of the pile. Often the bottoms of the leads are pointed and the weight of the pile leads and hammer force the bottom points into the ground,

holding them in position.

Tailing crane lift: a procedure sometimes used in erecting large pressure vessels or structural elements in which one crane (lead crane) lifts the top of the load and a second crane (tail crane), rigged to the bottom of the load, either secures the bottom of the load from movement or assists in the horizontal positioning of the load.

Tandem crane lift: the use of two or more cranes to lift a load.

Top running bridge: a bridge which travels over top of a runway track.

Tower crane: similar to a portal crane but with a tower intervening between the upperstructure and the gantry or other base structure; typically without a portal. To resist overturning moments, the assembly may be ballasted, fixed to a foundation, or a combination of both. The crane may be either fixed or on a traveling base.

Trim: the angle of inclination about the traverse (lateral) axis of a vessel.

Trolley: the unit that travels on bridge rails and supports the load block.

Two-blocking: the condition when the lower load block or hook assembly comes in contact with the upper load block, or when the load block comes in contact with the boom tip.

Underhung crane (hoist): a crane which is suspended from the bottom flange of a runway track or a single track monorail system.

SECTION 17

CONVEYORS

17.A GENERAL

17.A.01 Conveyor systems shall be constructed and installed in accordance with the manufacturer's recommendations.

17.A.02 Inspection, maintenance, and repair.

a. Inspection, maintenance, and repairs shall be performed in accordance with the manufacturer's recommendations by qualified personnel.

b. No maintenance shall be performed when a conveyor is in operation except for the following:

(1) if lubrication is to be done while the conveyor is in motion, lubrication points shall be easily accessible and safe for lubrication: only trained personnel who are aware of the hazards of the conveyor in motion shall be allowed to lubricate a conveyor that is operating; and
(2) when adjustments or maintenance is required while the conveyor is in operation, only trained personnel who are aware of the hazards shall be permitted to make the adjustment or maintenance.

c. Lockout and tagout procedures shall be used. ***> See Section 12***

d. Safe access shall be provided to permit inspection, lubrication, repair, and maintenance activities.

17.A.03 Safety devices.

a. On all conveyors where reversing or runaway are potential hazards or the effects of gravity create a potential for hazardous

uncontrolled lowering, antirunaway devices, brakes, backstops, or other safeguards shall be installed to protect persons from injury and property from damage.

b. Conveyor systems shall be equipped with an audible warning signal to be sounded immediately before starting of the conveyor. ***> On overland conveyors systems, the devices shall be required only at the transfer, loading, and discharge points and those points where personnel are normally stationed***

c. All conveyors shall be equipped with emergency stopping devices along their full length.

d. Safety devices shall be arranged to operate in such a manner that if power failure or a failure of the device occurs a hazardous condition would not result.

17.A.04 All exposed moving machinery parts that present a hazard shall be mechanically or electrically guarded or guarded by location.

a. Nip and shear points shall be guarded.

b. Take-up mechanisms may be guarded as an entity by placing standard railings or fencing, and warning signs, around the area in lieu of guarding each of nip and shear point.

c. In the case of a trolley conveyor when mechanical or electrical guarding would render the conveyor unusable, prominent and legible warnings shall be posted in the area or on the equipment and, where feasible, areas barricaded or lines marked on the ground to indicate the hazard area.

d. Guards shall be provided at points where personnel could Contact cables, chains, belts, and runaways of exposed bucket conveyors.

e. Unless guarded by location, those sections of chain conveyors which cannot be enclosed without impairing the function shall be provided with warning signs or personnel barriers.

f. Trolley conveyors shall be provided with spill guards, pan guards, or the equivalent if there is a potential for material to fall off the conveyor and endanger personnel or equipment.

g. At transfer, loading, and discharge points, unconfined and uncontrolled free fall of material that may result from flooding, ricocheting, overloading, trajectory, leakage, or a combination thereof, shall be prevented if the material would create a hazard to personnel. ***> In the absence of a guard specifically erected to protect personnel, warnings shall be provided to restrict unauthorized personnel from entering such hazardous areas***

h. At all points along the conveyor, except at points where loads are removed from or placed on a conveyor or where a conveyor discharges to or receives material from another conveyor, provisions shall be made to eliminate the possibility of loads or material being dislodged from the conveyor.

17.A.05 Access.

a. Crossovers or underpasses with safeguards shall be provided for passage over or under all conveyors: crossing over or under conveyors is prohibited except where safe passageways are provided.

b. Whenever conveyors pass adjacent to, or over, work areas, roadways, highways, railroads, or other public passageways, protective guards shall be installed: the guards shall be designed to catch and hold any load or material that may fall off or become dislodged from the system.

c. Where conveyors are operated in tunnels, pits, and similar

enclosures, ample room shall be provided to allow safe accessway and operating space for all personnel.

17.A.06 Emergency stop devices.

a. Unless the design, construction, and operation of a conveyor is clearly non-hazardous to personnel, emergency stop buttons, pull cords, limit switches, or similar emergency devices shall be provided at the following locations for remotely or automatically controlled conveyors or conveyors where operator stations are not manned or are beyond voice and visual contact from drive areas:

(1) loading arms,
(2) transfer points, and
(3) other potentially hazardous locations on the conveyor path not guarded by location or guards.

b. All emergency stop devices shall be easily identifiable and readily accessible.

c. Emergency stop devices shall act directly on the control of the conveyor concerned and shall not depend on the stopping of any other equipment.

d. Emergency stop devices shall be installed so that they cannot be overridden from other locations.

17.A.07 Gates and switches.

a. Power-positioned gate and switch sections shall be provided with devices which will prevent these sections from falling in case of power failure.

b. Means shall be provided on all gates and switch sections to prevent conveyed material from discharging into the open area created by lifting of the gate or switch.

17.A.08 Counterweights.

a. When counterweights are supported by belts, cables, chains, or similar means, the weights shall be confined in an enclosure to prevent the presence of personnel beneath the counterweight, or the arrangement shall provide a means to restrain the falling weight in case of failure of the normal counterweight support.

b. When counterweights are attached to lever arms they shall be securely fastened.

17.A.09 When two or more conveying systems are interfaced, special attention shall be given to the interfaced area to ensure the presence of adequate guarding and safety devices.

17.A.10 Conveyor controls shall be arranged so that in case of an emergency stop, manual reset or restart is required at the location where the emergency stop was initiated to resume conveyor operations.

17.A.11 Control stations shall be arranged and located so that the operation of the equipment is visible from them.

17.A.12 Controls shall be clearly marked or labeled to indicate the function controlled.

17.A.13 Hoppers and chutes.

a. All openings to the hopper and chutes shall be guarded to prevent persons from accidently stepping into them: if guards are not practical, warning shall be posted.

b. Dump hoppers having the hopper flush with the floor and which by their use cannot be guarded shall be equipped with grating having a maximum opening of 5 cm (2 in) and heavy enough to withstand any load which may be imposed on it. If the openings in the grating are larger or if no grating is provided,

temporary railing shall be placed around ground level hoppers when dumping operation are not in progress: during dumping operation, warning signs shall be placed in conspicuous locations warning personnel of an open pit.

17.A.14 Mobile conveyors.

a. Mobile conveyors shall be provided with brakes or other position locking devices for each degree of motion where movement would present a hazard.

b. Mobile conveyors shall be designed to be stationary against runaway and stable against overturning under normal conditions of operation.

c. When an operator is required on a mobile conveyor, a platform or cab shall be provided for his/her protection.

17.A.15 Portable conveyors.

a. The raising and lowering mechanism for the boom of a portable conveyor shall be provided with a safety device which will hold boom at any rated angle of inclination.

b. Portable conveyors shall be stable so that the conveyor will not topple when used with the manufacturer's rating and in a manner in which it was intended or when being moved.

17.A.16 Screw Conveyors.

a. Screw conveyors shall not be operated unless the conveyor housing completely encloses the conveyor moving elements and power transmission guards are in place, except that if the conveyor must have an open housing as a condition of use, the entire conveyor shall then be guarded by railing, fence, or by location.

b. Feed openings for shovel, front-end loader, or other manual

or mechanical equipment shall be constructed in such a way that the conveyor screw is covered by grating: if the nature of the material is such that grating cannot be used, then the exposed section of the conveyor shall be guarded by a railing and warning signs shall be posted.

17.B OPERATION

17.B.01 Conveyor equipment shall be used to convey only those materials for which it was designed and within the rated capacities and speeds.

17.B.02 Flight and apron conveyors shall be "jogged" or hand run through at least one complete revolution at installation to check design clearances prior to running under automatic power.

17.B.03 A conveyor that could cause injury when started shall not be started until all personnel in the area are alerted by a signal or by a designated person that the conveyor is about to start.

17.A.04 When a conveyor that could cause injury when started is automatically controlled or must be controlled from a remote location, an audible warning device shall be provided. The device shall be clearly audible at all points along the conveyor where personnel may be present.

a. The warning device shall be activated by the controller device that starts the conveyor and shall continue for a period of time before the conveyor starts; a flashing light or similar visual warning shall be used with the audible device when conditions limit the effectiveness of the audible device.

b. If a conveyor system is not exposed to the public, and if function of the system would be seriously hindered or adversely affected by the required time delay or where the intent of the warning may be misinterpreted, clear, concise, and legible warning signs shall be provided and indicate that the system may be started at any time, that danger exists, and that

personnel must keep clear: these warnings signs shall be provided along the conveyor at areas which are not guarded or protected by their location.

17.B.05 Before restarting a conveyor that has been stopped because of an emergency, an inspection of the conveyor shall be conducted and the cause of the emergency stop determined.

17.B.06 Only trained personnel shall be permitted to operate a conveyor: training shall include instruction in operation under normal conditions and in emergencies.

17.B.07 The area around loading and unloading points shall be kept clear of obstructions that could create a hazard.

17.B.08 Riding on conveyors is prohibited.

17.B.09 Personnel working with or near a conveyor shall be:

a. instructed as to the location and operation of pertinent stopping devices, and

b. alerted of the potential hazard of entanglement in conveyors caused by such items as loose clothing and jewelry and long hair.

17.B.10 Only trained personnel shall track a conveyor belt which must be done while the conveyor is operating.

17.B.11 Applying a belt dressing or other foreign material to a rotating drive pulley or conveyor belt shall be avoided.

17.B.12 Flight and apron conveyors handling sticky materials which tend to build up shall be cleaned as often as required for safe operation.

DEFINITIONS

Antirunaway: a safety device to stop a declining conveyor in case of mechanical or electrical failure.

Apron conveyor: a conveyor in which a series of apron pans forms a moving bed.

Apron pans: one of a series of overlapping or interlocking plates or shapes that, together with others, form the conveyor bed.

Backstop: a device to prevent reversal of a loaded conveyor under action of gravity when forward travel is interrupted.

Bucket conveyor: any type of conveyor in which the material is carried in a series of buckets.

Chain conveyor: any type of conveyor in which one or more chains act as the conveying medium.

Conveyor: a horizontal, inclined, or vertical device for transporting material in a path predetermined by the design of the device and having points of loading and discharge.

Flight conveyor: a type of conveyor consisting of one or more endless propelling media, such as chain, to which flights are attached, and a trough through which material is pushed by the flights.

Gate: a device or structure by means of which the flow of material may be stopped or regulated.

Guarded by location: describes moving parts so protected by their remoteness from the floor, platform, walkway, or other working level, or by their location with reference to frame, foundation, or structure as to reduce the foreseeable risk of accidental contact by persons or objects. Remoteness from foreseeable, regular, or frequent presence of public or employed

personnel may in reasonable circumstances constitute guarding by location.

Hopper: a box having a funnel-shaped bottom, or a bottom reduced in size, narrowed, or necked to receive material and direct it to a conveyor, feeder, or chute.

Mobile conveyor: a conveyor supported on a structure which is movable under its own power.

Overland conveyor: a single or series of belt conveyors designed to carry material across a distance, usually following the general contour of the load.

Portable conveyor: a transportable conveyor which is not self-propelled, usually having supports which provide mobility.

Screw conveyor: a conveyor screw revolving in a suitably shaped stationary trough or casing fitted with hangers, trough ends, and other auxiliary accessories.

Switch: a device for connecting two or more continuous package conveyor lines; an electrical control device; or a mechanism that transfers a trolley, carrier, or truck from one track to another at a converging or diverging section.

Take-up: the assembly of the necessary structural and mechanical parts that provides the means to adjust the length of belts, cables, chains, and similar transmission mechanisms to compensate for stretch, shrinkage, or wear, and to maintain proper tension.

Trolley conveyor: a series of trolleys supported from or within an overhead truck and connected by endless propelling means, such as chain, cable, or other linkage, with loads usually suspended from the trolleys.

SECTION 18

MOTOR VEHICLES AND AIRCRAFT

18.A GENERAL

18.A.01 Every person operating a motor vehicle shall possess, at all times while operating such vehicle, a permit valid for the equipment being operated.

18.A.02 Inspection, tests, maintenance, and repairs.

a. Inspections, tests, maintenance, and repairs shall be conducted by a qualified person and in accordance with the manufacturer's recommendations.

b. Before initial use, vehicles shall be inspected by a mechanic and found in safe operating condition. ***> This is a one-time inspection***

c. When dump trucks are brought onto a USACE job site they shall be inspected and found in compliance with the requirements of this Section before they are placed in service. This inspection shall be documented on a checklist.

d. All vehicles shall be inspected on a scheduled maintenance program.

e. Vehicles in use should be checked on a frequent basis to assure that the following parts, equipment, and accessories are in safe operating condition and free of apparent damage that could cause failure while in use:

(1) service brakes, including trailer brake connections;
(2) parking system (hand brake);
(3) emergency stopping system (brakes);
(4) tires;
(5) horns;

(6) steering mechanism;
(7) coupling devices;
(8) seat belts;
(9) operating controls;
(10) safety devices (e.g., backup alarms and lights, fire extinguishers, etc.); and
(11) accessories including lights, reflectors, windshield wipers, and defrosters where such equipment is necessary.

f. Inspection, test, repair, and maintenance records shall be maintained at the site and shall be available on request to the designated authority.

18.A.03 Vehicles not meeting safe operating conditions shall be immediately removed from service, its use prohibited until unsafe conditions have been corrected, and reinspected before being placed in service again.

18.A.04 All vehicles or combination of vehicles operated between sunset and sunrise shall have the following lights:

a. two headlights, one on each side of the front;
b. at least one red taillight and one red or amber stoplight on each side of the rear;
c. directional signal lights - both front and back; and
d. three emergency flares, reflective markers, or equivalent portable warning device.

18.A.05 Brake systems.

a. All vehicles, except trailers or semi-trailers having a gross weight of 2,270 kg (5,000 lbs) or less, shall be equipped with service brakes and manually-operated parking brakes.

b. Service and parking brakes shall be adequate to control the movement of, to stop, and to hold the vehicle under all conditions of service.

c. Service brakes on trailers and semitrailers shall be controlled from the driver's seat of the prime mover.

d. Braking systems on every combination of vehicles shall be so designed as to be in approximate synchronization on all wheels and develop the required braking effort on the rear-most wheels first. The design shall also provide for application of the brakes by the driver of the prime mover from the cab. Exceptions to this are vehicles in tow by approved tow bar hitch.

18.A.06 Every motor vehicle shall have:

a. a speedometer;
b. a fuel gage;
c. an audible warning device (horn) in operating condition;
d. a windshield equipped with an adequate windshield wiper;
e. an operable defrosting and defogging device;
f. an adequate rear view mirror or mirrors;
g. cabs, cab shields, and other protection to protect the driver from the elements and falling or shifting materials;
h. nonslip surfaces on steps; and
I. a power-operated starting device.

18.A.07 Glass in windshields, windows, and doors shall be safety glass. Any cracked or broken glass shall be replaced.

18.A.08 Trailers.

a. All towing devices used on any combinations of vehicles shall be structurally adequate for the weight drawn and shall be properly mounted.

b. A locking device or double safety system shall be provided on every fifth wheel mechanism and tow bar arrangement to prevent the accidental separation of towed and towing vehicles.

c. Every trailer shall be coupled with safety chains or cables to the towing vehicle. Such chain or cable shall prevent the

separation of the vehicles in case of tow bar failure.

d. Trailers equipped with power brakes shall be equipped with a break-away device which effectively locks-up the brakes in the event the trailer separates from the towing vehicle.

18.A.09 Industrial and commercial vehicles shall meet the guarding and safety requirements of Section 16.B.

18.A.10 Dump trucks.

a. All dump trucks shall be equipped with a holding device to prevent accidental lowering of the body while maintenance or inspection work is being done.

b. All hoist levers shall be secured to prevent accidental starting or tripping of the mechanism.

c. All off-highway end-dump trucks shall be equipped with a means (plainly visible from the operator's position while looking ahead) to determine whether the dump box is lowered.

d. Trip handles for tailgates on all dump trucks shall be arranged to keep the operator in the clear.

18.A.11 All buses, trucks, and combinations of vehicles with a carrying capacity of 1,360 kg (1.5 tons) or over, when operated on public highways, shall be equipped with emergency equipment required by State laws but not less than:

a. one red flag not less than 0.3 m (12 in) square with standard and three reflective markers which shall be available for immediate use in case of emergency stops.

b. two wheel chocks for each vehicle or each unit of a combination of vehicles.

c. at least one 2A:10B:C fire extinguisher (at least two properly

rated fire extinguishers are required for flammable cargoes).

18.A.12 Vehicle exhaust shall be controlled so that it will not present a hazard to the operator, attendants, or other personnel.

18.A.13 A safety tire rack, cage, or equivalent protection shall be provided and used when inflating, mounting, or dismounting tires installed on split rims, or rims equipped with locking rings or similar devices.

18.A.14 All rubber-tired motor vehicles shall be equipped with fenders and tires shall not extend beyond fenders: mud flaps may be used in lieu of fenders whenever motor vehicle equipment is not designed for fenders.

18.B OPERATING RULES

18.B.01 The principles of defensive driving shall be practiced.

18.B.02 Seat belts shall be installed and worn per 16.B.08: buses are exempt from this requirement.

18.B.03 At all times the operator must have the vehicle under control and be able to bring it to a complete stop within safe stopping distance.

18.B.04 Vehicles may not be driven at speeds greater than the posted speed limit, with due regard for weather, traffic, intersections, width and character of the roadway, type of motor vehicle, and any other existing condition.

18.B.05 Headlights shall be switched to low beam when approaching other vehicles.

18.B.06 Headlights shall be lighted from sunset to sunrise, during fog, smoke, rain, or other unfavorable atmospheric conditions, and at any other time when there is not sufficient light for the vehicle to be seen or the operator to see on the highway at a

distance of 150 m (500 ft).

18.B.07 Vehicles shall not be driven on a down grade with gears in neutral or clutch disengaged.

18.B.08 Railroad crossings and drawbridges.

a. Upon approaching a railroad crossing or drawbridge, vehicles shall be driven at such a speed as to permit stopping before reaching the nearest track or the edge of the draw and shall proceed only if the course is clear.

b. Vehicles transporting personnel, explosives or flammable or toxic substances shall stop at railroad crossings and drawbridges and shall not proceed until the course is clear, except at a railroad crossing or drawbridge protected by a traffic officer or a traffic signal giving a positive indication for approaching vehicles to proceed.

18.B.09 Vehicles shall not be stopped, parked, or left standing on any road, or adjacent thereto, or in any area in a manner as to endanger the vehicle, other vehicles, equipment, or personnel using or passing that road or area.

18.B.10 Vehicles shall not be left unattended until the motor has been shut off, the key removed (unless local regulations prohibit), parking brake set, and gear engaged in low, reverse, or park. If stopped on a hill or grade, front wheels shall be turned or hooked into the curb or the wheels securely chocked.

18.B.11 Vehicles carrying loads which project beyond the sides or rear of the vehicle shall carry a red flag, not less than 0.09 m^2 (12 in^2), at or near the end of the projection; at night or when atmospheric conditions restrict visibility, a warning light shall be used in lieu of the red flag. Drivers will assure the load does not obscure vehicle lights and/or reflectors.

18.B.12 Employees shall not be permitted to get between a

towed and towing vehicle except when hooking or unhooking.

18.B.13 No vehicle or combination of vehicles hauling unusually heavy loads or equipment shall be moved until the driver has been provided with the required permits, the correct weights of the vehicles and load, and a designated route to be followed.

18.B.14 When backing or maneuvering, operators will take the applicable precautions outlined in 08.B.04. Prior to backing, and if a signal person or spotter is not used, operators will walk behind their vehicle to view the area for possible hazards.

18.B.15 When a bus, truck, or truck-trailer combination is disabled or parked on a highway or the adjacent shoulder, red flags shall be displayed during the daytime and reflector, flares, or electric lights displayed at night.

18.B.16 Loading vehicles.

a. Drivers of trucks and similar vehicles shall leave the cab while the vehicle is being loaded when they are exposed to danger from suspended loads or overhead loading equipment, unless the cab is adequately protected.

b. Vehicles shall not be loaded in a manner which obscures the driver's view ahead or to either side or which interferes with the safe operation of the vehicle.

c. The load on every vehicle shall be distributed, chocked, tied down, or secured. Loads shall be covered when there is a hazard of flying/falling dirt, rock, debris, or material.

18.C TRANSPORTATION OF PERSONNEL

18.C.01 The number of passengers in passenger-type vehicles shall not exceed the number which can be seated.

18.C.02 Trucks used to transport personnel shall be equipped

with a securely anchored seating arrangement, a rear endgate, and guardrail. Steps or ladders, for mounting and dismounting, shall be provided.

18.C.03 All tools and equipment shall be guarded, stowed, and secured when transported with personnel.

18.C.04 No person will be permitted to ride with arms or legs outside of a vehicle body; in a standing position on the body; on running boards; seated on side fenders, cabs, cab shields, rear of the truck, or on the load.

18.C.05 All vehicles transporting personnel during cold or inclement weather shall be enclosed.

18.C.06 Explosives, flammable materials (excepting normal fuel supply), or toxic substances may not be transported in vehicles carrying personnel.

18.C.07 Vehicles transporting personnel shall not be moved until the driver has ascertained that all persons are seated and the guardrails and rear endgates are in place or doors closed.

18.C.08 Getting on or off any vehicle while it is in motion is prohibited.

18.C.09 All motor vehicles shall be shut down prior to and during fueling operations. ***> See 16.A.14***

18.D ALL TERRAIN VEHICLES (ATV)

18.D.01. Every ATV operator shall possess a valid state drivers license and shall have completed an ATV training course prior to operation of the vehicle.

18.D.02 The manufacturer's recommended payload shall not be exceeded at any time.

18.D.03 Gloves and an approved motorcycle helmet with full face shield or goggles shall be worn at all times while operating an ATV.

18.D.04 ATVs are to be used off-road only (no paved road use).

18.D.05 ATVs shall be driven during daylight hours only.

18.D.06 Only ATVs with four or more wheeled are permitted to be used.

18.D.07 Passengers are prohibited on ATVs.

18.D.08 All ATVs shall be equipped with a warning signal device (horn).

18.E AIRCRAFT

18.E.01 All non-military aircraft shall be registered, certified in the appropriate category, and maintained in accordance with the airworthiness standards of the Federal Aviation Administration (FAA). (If used outside the United States, and not prohibited by other regulation such as ER 95-1-1, registration, certification, and maintenance in accordance with the standards of a comparable governing body of foreign or international authority may be substituted for those of the FAA.)

18.E.02 All contract pilots or pilots of chartered aircraft shall hold at least a commercial pilot certificate with instrument rating. All pilots of non-military aircraft shall possess ratings to comply with the FAA Regulation governing the aircraft and operations involved.

18.E.03 All non-military aircraft shall be equipped with a two-way radio.

18.E.04 All non-military flight operations shall be in accordance with the FAA rules governing conduct for the specific operation.

(Examples are 14 CFR 133 (FAR Part 133) - Rotocraft External-Load Operations; 14 CFR 135 (FAR Part 135) - Air Taxi Operators and Commercial Operators of Small Aircraft; and 14 CFR 91 (FAR Part 91) - General Operating and Flight Rules.)

18.E.05 All military flight operations shall be conducted under appropriate DOT/DOD regulations, such as the AR 95 Series.

DEFINITIONS

Motor Vehicle: any vehicle propelled by a self-contained power unit, except a vehicle designed solely for use on railways or other trackage, or equipment designed exclusively for use off the highway.

SECTION 19

FLOATING PLANT AND MARINE ACTIVITIES

19.A GENERAL

19.A.01 Floating plant inspection and certification.

a. All floating plant that are regulated by the USCG shall have current inspections and certificates issued by the USCG before being placed in service and a copy shall be posted in a public area on board the vessel. A copy of any USCG Form 835 issued to the vessel in the preceding year shall be available to the designated authority and a copy shall be on board the vessel.

b. All dredges and quarter boats not subject to USCG inspection and certification or not having a current American Bureau of Shipping (ABS) classification shall be inspected in the working mode annually by a marine surveyor accredited by the National Association of Marine Surveyors (NAMS) or the Society of Accredited Marine Surveyors (SAMS) and having at least five years experience in commercial marine plant and equipment. All other plant shall be inspected annually by a qualified person. The inspection shall be documented, and a copy of the most recent inspection report shall be posted in a public area on board the vessel and a copy shall be furnished to the designated authority upon request. The inspection shall be appropriate for the intended use of the plant and shall, as a minimum, evaluate structural integrity and compliance with NFPA 302, Fire Protection Standard for Pleasure and Commercial Motor Craft.

c. When any floating plant is brought onto the job site, before it is placed in service it shall be determined to be in safe operating condition.

d. Periodic inspections and tests shall assure that a safe

operating condition is maintained.

e. Records of inspections shall be maintained at the site and shall be available to the designated authority.

f. Floating plant found in an unsafe condition shall be taken out of service and its use prohibited until unsafe conditions have been corrected.

19.A.02 Personnel qualifications.

a. Officers and crew shall be in possession of a current, valid USCG license, which shall be posted in a public area on board the vessel, or correctly endorsed document as required by the USCG.

b. Government operators shall be licensed or certified in accordance with the requirements outlined in ER 385-1-91. Officers and crew of floating plant shall be licensed and/or documented by the USCG when the plant is subject to one or more of the following criteria:

(1) the vessel is inspected and certified by USCG in accordance with ER 1125-2-304, Appendix I, Inspection and Certification Agreement;
(2) the vessel is normally engaged in or near a channel or fairway in operations that restrict or affect navigation of other vessels and required by law to be equipped with radio-telephones of the 156-162 band frequency; or
(3) floating plant is engaged in the transfer of oil or hazardous material in bulk.

c. A USCG Radar Observers endorsement on licenses is required for all Operators of Uninspected Towing Vessels, Masters, and Pilots on radar-equipped vessels 8 m (26 ft) or more in length. Endorsements must be issued from a USCG approved training facility.

d. Government operators of floating plant which does not meet the criteria of paragraph 19.A.02b(1) shall be licensed and certified in accordance with the requirements of ER 385-1-91. Licensing and certification will be performed by a qualified individual designated as the USACE Command's marine licensing official.

19.A.03 Severe weather precautions.

a. Where floating plant may be endangered by severe weather - including sudden and locally severe weather, storms, high winds, hurricanes, and floods - plans shall be made for removing or securing plant and evacuation of personnel in emergencies. This plan shall be part of the activity hazard analysis and shall include at least the following:

(1) a description of the types of severe weather hazards the plant may potentially be exposed to and the steps which will be taken to guard against the hazards,
(2) the time frame for implementing the plan (using as a reference the number of hours remaining for the storm to reach the work site if it continues at the predicted speed and direction), including the estimated time to move the plant to the safe harbor after movement is started,
(3) the name and location of the safe location,
(4) the name of the vessels which will be used to move any non-self-propelled plant, and their type, capacity, speed, and availability, and
(5) river gage readings at which floating plant must be moved away from dams, river structures, etc., to safe areas.

b. Extended movement of floating plant and tow shall be preceded by an evaluation of weather reports and conditions by a responsible person to ascertain that safe movement of the plant and tow can be accomplished.

c. Work or task orders shall be preceded by an evaluation of weather reports and conditions by a responsible person to

ascertain that safe working conditions exist and safe refuge of personnel is assured.

d. USCG approved PFD (type I, II, III, or V) shall be worn by all personnel on decks exposed to severe weather, regardless of other safety devices used.

e. A sufficient number of vessels of adequate size and horsepower, each designed, outfitted, and equipped for towing service, shall be available at all times to move both self- and non self-propelled plant against tides, current, and winds during severe weather conditions.

f. Contractors working in an exposed marine location shall monitor the NOAA marine weather broadcasts and shall use other local commercial weather forecasting services as may be available.

g. Floating plant will not operate in a channel entrance or in open or exposed waterways that experience known changes in sea state conditions that could exceed the plant's seaworthy capability.

19.A.04 Emergency planning.

a. Plans shall be prepared for response to marine emergencies such as fire, sinking, flooding, severe weather, man overboard, hazardous materiel incidents, etc. ***> See Section 01.E***

b. A station bill, setting forth the special duties and the duty station of each crew member for various emergencies, shall be prepared and posted in conspicuous locations throughout the vessel.

c. Each crew member shall be given a written description of, and shall become familiar with, his/her emergency duties and shall become familiar with the vessel's emergency signals.

d. "Abandon ship/boat" and "person overboard" procedures shall include instructions for mustering personnel.

e. On all floating plant which have a regular crew or on which people are quartered, the following drills shall be held at least monthly during each shift (unless the vessel is required, under USCG regulations, to be drilled more frequently): abandon ship/boat drills, fire drills, and person overboard or rescue drills.

(1) The first set of drills shall be conducted within 24 hours of the vessel's occupancy or commencement of work.

(2) Where crews are employed or quartered at night, every fourth set of drills shall be at night; the first set of night drills shall be conducted within the first two weeks of the vessel's occupancy.

(3) Drills shall include, where appropriate, how to handle a pump shell or pipe rupture or failure within the hull (proper shutdown procedures, system containment, etc.) and how to handle leaks or failures of the hull or portions of it (what compartments to secure, how to handle power losses, pulling spuds to move to shallow water, etc.).

f. Person overboard or rescue drills shall be held at least monthly at boat yards, locks, dams, and other locations where marine rescue equipment is required.

g. Emergency lighting and power systems shall be operated and inspected at least monthly to ensure proper operation.

(1) Internal combustion engine driven emergency generators shall be operated under load for at least 2 hours each month.

(2) Storage batteries for emergency lighting and power systems shall be tested at least once every 2 months.

h. A record of all drills and emergency system checks,

including any deficiencies noted in equipment and corrective action taken, shall be made in the station log.

19.A.05 Equipment requirements.

a. Fenders shall be provided to prevent damage and sparking and to provide safe areas for workers exposed to pinching situations caused by floating equipment.

b. Axes or other emergency cutting equipment shall be provided in accessible positions on all towing vessels for use such as freeing lines.

c. A signal device shall be provided on all vessels to give signals required by the navigation rules applicable to the waters on which the vessel is operated.

d. All controls requiring operation in cases of emergency - such as boiler stops, safety valves, power switches, fuel valves, alarms, and fire extinguishing systems - shall be located so that they are protected against accidental operation but are readily accessible in an emergency.

e. Electric lights used on or around gasoline and oil barges or other marine locations where a fire or explosion hazard exists shall be explosion-proof.

f. General alarm systems shall be installed and maintained on all floating plant where it is possible for either a passenger or crewman to be out of sight or hearing from any other person.

(1) Where general alarm systems are used they shall be operated from the primary electrical system with standby batteries on trickle charge that will automatically furnish the required energy during an electrical-system failure.

(2) A sufficient number of signaling devices shall be placed on each deck so that they can be distinctly heard above the normal

background noise at any point on the deck.

(3) All signaling devices shall be so interconnected that actuation can occur from at least one strategic point on each deck.

h. Smoke alarms are required for all living quarters of floating plant; smoke alarms, if wired, should use the same electrical system as that of the electrical alarms.

I. All doors shall be capable of being opened from either side and provided with positive means to secure them in both the open and closed position.

j. Escape hatches and emergency exits shall be marked on both sides with letters, at least 2.5 cm (1 in) high, stating "**EMERGENCY EXIT - KEEP CLEAR**."

k. Each prime mover (engine, turbine, motor) driving a dredge pump shall be capable of being stopped by controls remote from the prime mover locations.

l. Shore power receptacles shall have a grounding conductor to prevent potential difference between the shore and the vessel.

m. Circuits with GFCI protection shall be provided in grounded 120 volt or 240 volt systems in toilet/shower spaces, galley, machinery spaces, weather deck, exterior, or near any sinks.

n. Where appropriate, vessels should have watertight compartments readily identified and properly maintained in a watertight condition (i.e., sealable doors in place and fully functional) and all penetrations maintained in a watertight condition.

19.A.06 Fuel systems and fuel transfers.

a. Gauge glasses or try cocks shall not be installed on fuel

tanks or lines unless they meet the requirements of 46 CFR 58.50-10.

b. A shutoff valve shall be installed at the fuel tank connection: arrangement shall be made for operating this valve from outside the compartment in which the tank is located and from outside the engine compartment and outside the house bulkheads at or above the weather deck of the vessel.

c. A shutoff valve shall be installed at the engine end of the fuel line unless the length of the supply pipe is 1.8 m (6 ft) or less. Arrangement shall be made for operating this valve from outside the house bulkheads, at or above the weather deck on the vessel.

e. All carburetors on gasoline engines shall be equipped with a backfire trap or flame arrestor.

f. All carburetors, except down draft type, shall be provided with a drip pan, with flame screen, which is continuously emptied by suction from the intake manifold or by a waste tank.

g. Fuel and lubricant containers and tanks shall be diked or curbed to contain the tank contents in case of leakage in accordance with NAVFAC DM-22, *Petroleum Fuel Facilities*. In lieu of a dike or curb, other means complying with USCG requirements in 46 CFR Parts 64, *Marine Portable Tanks*, and 98.30, *Handling and Storage of Portable Tanks*, may be used.

h. Fuel oil transfers for floating plant shall be in accordance with the provisions of USCG regulations, 46 CFR and 33 CFR Parts 155 and/or 156. For uninspected vessels, USCG regulations in 33 CFR 156.120 and 33 CFR 155.320 for fuel coupling devices and fuel oil discharge containment apply. Venting fuel tanks is necessary when using the couplings prescribed by 33 CFR 156.120(1) or (2).

19.A.07 Safe practices.

a. Obstructing cables/lines which cross waterways between floating plant or between plant and mooring shall be clearly marked.

b. On all floating plant where people are quartered, one person shall be on watch at all times to guard against fire and provide watch person service. In lieu of a watch person, an automatic fire detection and fire and emergency warning system(s) may be used.

c. Provisions shall be made to prevent accumulation of fuel and grease on floors and decks and in bilges.

d. Swimming shall be prohibited for all personnel on floating plant and other marine locations, except certified divers in the performance of their duties, unless necessary to prevent injury or loss of life.

e. A person in the water shall be considered as a person overboard and appropriate action taken.

f. When barriers or blanks are installed in piping systems as a lock-out procedures, positive means - such as protruding handles - shall be used to easily recognize their presence. All barriers shall be marked - including name of installer, name of inspector, and date of installation - and accounted for prior to installation and subsequent to removal.

g. Deck loading will be limited to safe capacity. Loads will be secured and holdbacks or rings will be provided to secure loose equipment during rough weather.

h. Guardrails, bulwarks, or taut cable guardlines shall be provided for deck openings, elevated surfaces, and similar locations where persons may fall or slip from them. Guardrails and taut cable guardlines shall comply with the requirements for

standard guardrails. ***> See Section 21.B***

I. Projection and tripping hazards shall be removed, identified with warning signs, or distinctly marked with safety yellow.

j. Deck cargo carried on fuel barges shall be placed on dunnage.

k. When two or more pieces of floating plant are being used as one unit, they shall be securely fastened together to prevent openings between them or the openings shall be covered or guarded.

l. All anchor points shall be clearly identified and shall be inspected prior to applying a load or putting cables under tension. Anchor points not structurally sound shall be cut out, removed, and/or welded over to preclude usage. Visual checks and "all clear" warnings shall be made prior to tensioning cables.

19.A.08 Confined spaces. ***> See Section 06.I***

a. Every floating plant shall be surveyed for the presence of confined spaces. A list of all confined spaces shall be maintained on board the vessel/floating plant: on those vessels without a location to maintain the list (e.g., a barge), the list shall be maintained at the worksite.

b. All permit-required confined spaces on floating plant shall be indicated with a sign or placard, or similar device.

19.A.09 When there is a potential for marine activities to interfere with or damage utilities or other structures, including those underwater, a survey shall be conducted to identify the utilities or structures in the work area, analyze the potential for interference or damage, and recommend steps to be taken to prevent the interference or damage.

19.A.10 Ventilation.

a. All motor vessels or boats powered by internal combustion engines having electric spark ignition systems or having auxiliary engines of this type in cabins, compartments, or confined spaces shall be equipped with an exhaust fan(s) for ventilating engine space and bilges.

b. At least two ventilators fitted with fans capable of ventilating each machinery space and fuel tank compartment, including bilges, shall be provided to remove any flammable or explosive gases, except those vessels constructed with the greater portions of the bilges open or exposed to the natural atmosphere at all times. ***> Note this requirement does not apply to diesel engines***

c. Other compartment spaces within a vessel, not covered in this section, may be naturally vented.

d. All living spaces, including the galley, shall be adequately ventilated in a manner suitable to the purpose of the space.

e. For launches and motorboats having diesel power plants not equipped with fans, ventilating shall be by natural draft through permanently open inlet and outlet ducts extending into the bilges. Inlet and exhaust ducts shall be equipped with cowls or exhaust heads.

f. Vent and ventilator requirements.

(1) Fans shall be rated for Class I hazardous locations and located as remotely from potential explosive areas as practical. ***> See Section 11.G***

(2) The vent intake shall extend to within 0.3 m (1 ft) of the bottom of the compartment.

(3) Means shall be provided for stopping all fans in ventilation

systems serving machinery components and for closing all doorways, ventilators, chases, and annular spaces around tunnels and other openings from outside these spaces in case of fire.

g. Engines shall not be started until the engine space and bilges have been ventilated to remove fuel vapor.

19.A.11 The latest information published by the USCG regarding aids to navigation shall be maintained aboard vessels 8 m (26 ft) or more in length.

19.B ACCESS

19.B.01 General. ***> See also 19.A.07h***

a. All means of access shall be properly secured, guarded, and maintained free of slipping and tripping hazards. ***> See Section 21***

b. Nonslip surfaces shall be provided on all working decks, stair treads, ship ladders, platforms, catwalks, and walkways, particularly on the weather side of all doorways opening on deck.

c. Grab bars shall be provided on the sides of superstructure of tugs, tenders, and launches except where railing is present. Grab bars will be placed as close as possible to 42 inches above the deck.

d. Double rung or flat tread type Jacob's ladders shall be used only when no safer form of access is practical: when in use, they shall hang without slack and be properly secured.

19.B.02 Access to/from vessels.

a. Safe means for boarding or leaving a floating plant shall be provided and guarded to prevent persons from falling or slipping thereon.

b. A stairway, ladder, ramp, gangway, or personnel hoist shall be provided at all personnel points of access with breaks of 48 cm (19 in) or more in elevation.

c. Ramps for access of equipment and vehicles to or between vessels shall be of adequate strength, provided with side boards, and be well maintained.

d. Gangways and ramps shall be:

(1) secured at one end by at least one point on each side with lines or chains to prevent overturning,
(2) supported at the other end in such a manner to support them and their normal loads in the event they slide off their supports,
(3) placed at an angle no greater than that recommended by the manufacturer, and
(4) provided with a standard guardrail (toeboards are optional depending on their usefulness and the hazard involved). ***> See Section 21.B***

19.B.03 Access on vessels.

a. Vertical access shall be provided between various decks by means of stairs or permanent inclined ladders.

b. Employees shall not be permitted to pass fore and aft, over, or around deck loads unless there is a safe passage.

c. If cargo or materials are stored on deck of barges, scows, floats, etc., the outboard edge shall not be used as a passageway unless at least 0.6 m (2 ft) of clearance is maintained.

19.B.04 Emergency access.

a. All vessels, except those easily boarded from the water, shall provide at least one portable or permanent ladder of sufficient length to rescue a person overboard.

b. Two means of escape shall be provided for normal work, assembly, sleeping, and messing areas on floating plants.

c. Means of access shall be maintained safe and functional.

19.B.05 Access on floating pipelines.

a. All floating pipelines used as accessways shall be equipped with a walkway and handrail on at least one side.

b. Walkways shall be at least 50 cm (20 in) wide and anchored to the pipeline. The use of PFDs is also required. ***> See Section 05.I***

c. When walkways and handrails are not provided (i.e., the pipeline is not intended for access), the pipeline shall be barricaded at both ends to prevent access by any person.

19.C LAUNCHES, MOTORBOATS, AND SKIFFS

19.C.01 Crew requirements.

a. In the following circumstances a qualified employee shall be assigned to assist with deck duties:

(1) when extended trips including overnight trips are made from the work site,
(2) when conditions of navigation make it hazardous for an operator to leave the wheel while underway,
(3) when operations being performed, other than tying-in, require the handling of lines,
(4) when operating at night or during inclement weather, or
(5) when towing.

b. A qualified employee is any individual who has established, to the satisfaction of the operator of the vessel, that he/she is physically and mentally capable of adequately performing the deck duties to which he/she may be assigned.

19.C.02 Personnel and cargo requirements.

a. The maximum number of personnel and weight that can safely be transported shall be posted on all launches, motorboats, and skiffs. The number of personnel (including crew) shall not exceed the number of PFDs aboard.

b. Each boat shall have sufficient room, freeboard, and stability to safely carry the cargo and number of passengers allowed with consideration given to the weather and water conditions in which it will be operated.

19.C.03 Fire protection.

a. The minimum number and rating of fire extinguishers which shall be carried on all launches and motorboats, including outboards, are as follows:

Length	Extinguisher
less than 8 m (26 ft)	one 1-A:10-B:C
8 m (26 ft) or more	two 1-A:10-B:C

b. All launches and motorboats having gasoline or liquid petroleum gas power plants or equipment in cabins, compartments, or confined spaces shall be equipped with a built-in automatic CO_2 or other equally effective type of fire extinguishing system.

19.D DREDGING

19.D.01 Prior to repair or maintenance on the pump, suction or discharge lines below the water line, or within the hull, the ladder (or drag arm) shall be raised (above the waterline) and positively secured. This provision is in addition to the normal securing of hoisting machinery. Blank or block plates shall also be set in suction or discharge lines as appropriate.

19.D.02 Dredge pipelines that are floating or supported on

trestles shall display appropriate lights at night and in periods of restricted visibility in accordance with USCG regulations and 33 CFR 88.15.

19.D.03 Submerged and floating dredge pipeline.

a. Submerged pipeline shall rest on the channel bottom where a pipeline crosses a navigation channel and while submerged; the top of the pipeline and any anchor securing the pipe shall be no higher than the required project depth for the navigation channel in which the pipe is placed.

(1) Whenever buoyant or semi-buoyant pipeline is used, the dredge operator will assure that the pipeline remains fully submerged and on the bottom; whenever it is necessary to raise the pipeline, proper clearances shall be made and maintained and the entire length of the pipeline will be adequately marked.

(2) The location of the entire length of submerged pipeline shall be marked with signs, buoys, lights, or flags as required by the USCG and as approved by the Designated Authority.

(3) Routine inspections of the submerged pipe shall be conducted to ensure anchorage.

(4) All anchors and related material shall be removed when the submerged pipe is removed.

b. Floating pipeline is any pipeline which is not anchored on the channel bottom. Floating pipeline, to include rubber discharge hoses, shall be clearly marked.

c. Pipelines shall not be permitted to fluctuate between the water surface and the channel bottom or lie partially submerged.

19.D.04 Dredges shall be designed so that a failure or rupture of

any of the dredge pump components, including dredge pipe, shall not cause the dredge to sink. Data or plans supporting this capability must be available to the government representative upon request.

19.D.05 Mobilization, demobilization, and relocation of dredges, support barges, support tenders, tugs, and heavy equipment shall be by qualified persons under the direct supervision of a responsible individual.

19.D.06 Hopper dredges shall offer a safe means and process to load and unload personnel.

19.D.07 Any dredge which has a dredge pump below the waterline shall have a bilge alarm or shutdown interface.

19.D.08 Covers of "stone boxes" shall be secured with at least two positive means when the boxes are working under positive pressure.

19.E NAVIGATION LOCKS AND LOCKING

19.E.01 Smoking, the use of open flame equipment, or other ignition sources shall be prohibited on lock structures within 50 feet of vessels containing flammable or hazardous materials during lockage.

19.E.02 Pleasure and commercial recreational craft shall not be locked through a lock chamber with a vessel containing dangerous, flammable, or hazardous cargo.

a. Simultaneous lockage of two vessels or tows carrying dangerous cargoes containing flammable vapors, or simultaneous lockage of another vessel or tow carrying non-dangerous cargoes and vessel or tow carrying dangerous cargoes, shall not be permitted when river traffic in the approaches to a lock is light.

b. When the river approaches to a lock are congested, simultaneous lockage of the aforementioned vessels or tows, other than pleasure craft, shall be permitted provided:

(1) the first vessel or tow in and the last vessel or tow out are secured before the other enters or leaves;
(2) any vessel or tow carrying dangerous cargoes is not leaking; and
(3) all masters involved have agreed to the joint use of the lock chamber.

Vessels with flammable or highly hazardous cargo will be passed separately from all other vessels. Hazardous materials are described in Part 171, Title 49, Code of Federal Regulations; flammable materials are defined in the National Fire Code of the NFPA.

DEFINITIONS

Floating plant: includes marine vessels use to transport personnel, work boats, floating cranes and derricks, barges, patrol boats, etc.

Gangway: any ramp, stairway, or ladder provided for personnel to board/leave a vessel.

Vessel: every type of watercraft or artificial contrivance used, or capable of being used, as a means of transportation on water, including special-purpose floating structures not primarily designed for or used as a means of transportation on water.

SECTION 20

PRESSURIZED EQUIPMENT AND SYSTEMS

20.A GENERAL

20.A.01 Inspections and tests - general.

a. Pressurized equipment and systems shall be inspected and performance tested before being placed in service and after any repair or modification.

b. Unless state or local codes specify more frequent inspection, temporary or portable pressurized equipment and systems shall be inspected at intervals of not more than six months and permanent installations shall be inspected at least annually.

c. Inspections of pressure vessels prior to being placed in service shall be in accordance with the American Society of Mechanical Engineers (ASME) "Boiler and Pressure Vessel Code"; in-service inspections of pressure vessels shall be in accordance with the National Board of Boiler and Pressure Vessel Inspectors "National Board Inspection Code."

d. Inspections and tests will be performed by personnel qualified in accordance with the ASME Code or the National Board of Boiler and Pressure Vessel Inspectors.

20.A.02 Hydrostatic testing.

a. Unless otherwise specified by state or local codes, hydrostatic testing of unfired pressured vessels shall be performed:

(1) when vessels are installed;
(2) when vessels are placed in service after lay-up;
(3) after any repairs or modifications;
(4) every three years;

(5) if the vessel shows any rust or other deterioration; or
(6) when conditions found during inspections warrant tests.

b. The following unfired vessels are exempt from this requirement:

(1) vessels designed for a maximum allowable pressure not exceeding 100 kPa (15 psi),
(2) vessels having an internal volume of 0.14 m^3 (5 ft^3) or less and a maximum pressure of 700 kPa (100 psi),
(3) compression tanks containing water under pressure not exceeding 700 kPa (100 psi) and temperatures not exceeding 93° C (200° F),
(4) compression tanks containing water and fitted with a permanent air charging line subject to pressures not exceeding 100 kPa (15 psi) and temperatures not exceeding 93° C (200° F),
(5) fire extinguishers ***> see Section 9***,
(6) for vessels with inspection doors - such as oil-filled (governor) pressure tanks - hydrostatic tests need only be given to repaired, modified, or deteriorated tanks; inspections to determine deterioration will be made every two years for external condition and every four years for internal condition.

20.A.03 Records of the inspections and tests shall be available for review on request: a certificate shall be posted near the vessel controls prior to operation of the equipment.

20.A.04 Tests for structural integrity or leaks using pressurized gases, such as air, are prohibited except testing of bulk petroleum, oil, and lubricant (POL) storage tanks under American Petroleum Institute (API) standards.

20.A.05 Any pressurized equipment or system found to be in an unsafe operating condition shall be tagged **"OUT OF SERVICE - DO NOT USE"** at the controls and its use prohibited until the unsafe conditions have been corrected.

20.A.06 Pressurized equipment and systems shall be operated

and maintained only by qualified, designated personnel.

20.A.07 The normal operating pressure of pressurized equipment and systems shall not exceed the design pressure.

20.A.08 No safety appliance or device shall be removed or made ineffective, except for making immediate repairs or adjustments, and then only after the pressure has been relieved and the power shut off.

20.A.09 Repairs or adjustments to equipment or systems under pressure require a safe clearance procedure.

20.A.10 The discharge from safety valves, relief valves, and blowoffs shall be located so that it is not a hazard to personnel.

20.A.11 Master valves and controls shall be either located or equipped to permit operation from the floor level or they shall be provided with safe access.

20.A.12 A pressure gauge shall be provided on all pressurized equipment and systems.

20.A.13 Safety and relief valves shall be provided on all pressurized equipment and systems.

a. A safety relief valve setting not more than 10% over working pressure is recommended: in no case shall the safety relief valve setting be higher than the maximum allowable pressure of the receiver or the system.

b. No valve shall be placed between the pressure vessel or generating equipment and a safety or relief valve or between the safety or relief valve and the atmosphere.

c. Adjustments and settings of safety relief valves must be made by a trained mechanic with equipment designed for

valve adjustment: valves shall be sealed after adjustment.

d. In the event that the pressure registers above the maximum allowable working pressure on the gauge without the safety or relief valve operating, the pressure gauge shall be checked immediately: if such check indicates that the safety or relief valve is inoperative, the equipment shall be removed from service until the safety or relief valve has been adjusted or replaced.

20.A.14 Piping shall meet requirements of the ANSI B31.1, *Code for Power Piping*.

20.A.15 Pressurized manual equipment, subject to whipping or rotation if released, shall be provided with an automatic shut-off or control of the dead-man type.

20.A.16 Quick makeup connections shall be secured with a safety lashing.

a. Safety lashings shall consist of two metal hose clamps connected by a flexible lacing: the metal hose clamps shall be attached to the hose ends separate from the quick makeup connection.

b. The flexible lacing shall be suitably strong cables, chains, or wires: wires or pins through the quick makeup connection are not acceptable for use as safety lashings.

20.A.17 All pressurized cylinders, actuating booms, outriggers, or other load supporting appliances shall be equipped with pilot check valves, holding valves or positive mechanical locks to prevent movement in case of failure in the pressure system. Replacement of pressure system fittings shall be with new parts equivalent to the manufacturer's standards.

20.B COMPRESSED AIR AND GAS SYSTEMS

20.B.01 Standards.

a. Air receivers shall be constructed in accordance with the ASME *Code for Unfired Pressure Vessels*.

b. All safety valves used shall be constructed, installed, tested and maintained in accordance with the ASME *Code for Unfired Pressure Vessels*.

20.B.02 Access and guarding.

a. Compressors and related equipment shall be located to provide safe access to all parts of the equipment for operation, maintenance, and repairs.

b. Safety appliances, such as valves, indicating devices, and controlling devices, shall be constructed, located, and installed so that they cannot be readily rendered inoperative by any means, including the elements.

20.B.03 Air hose, pipes, valves, filters, and other fittings shall be pressure rated by the manufacturer and this pressure shall not be exceeded. Defective hose shall be removed from service.

20.B.04 Hose shall not be laid over ladders, steps, scaffolds, or walkways to create a tripping hazard.

20.B.05 Compressed air for cleaning.

a. The use of compressed air for blowing dirt from hands, face, or clothing is prohibited.

b. Compressed air shall not be used for other cleaning purposes except where reduced to less than 200 kPa (30 psi) and then only with effective chip guarding and PPE. This 200 kPa (30 psi) requirement does not apply for concrete forms,

mill scale, and similar cleaning purposes.

20.B.06 When used on tools and equipment such as track drills, all airlines exceeding 1.3 cm (0.5 in) inside diameter shall have a safety device at the source of supply or branch line to reduce pressure in case of hose failure.

20.B.07 Governors.

a. A speed governor, independent of the unloaders, shall be installed on all air compressors except those driven by electrical induction or electrical synchronized motors.

b. If the air compressor is engine or turbine driven, an auxiliary control to the governor shall be installed to prevent racing when the unloader operates.

20.B.08 Every air compressor shall automatically stop its air-compressing operation before the discharge pressure exceeds the maximum working pressure allowable on the weakest portion of the system.

a. If this automatic mechanism is electrically operated, the actuating device shall be so designed and constructed that the electrical contact or contacts cannot lock or fuse in a position that will cause the compressor to continue its operation.

b. An air bypass and alarm may be used as an alternative.

20.B.09 Provision shall be made to exclude flammable materials and toxic gases, vapors, or dusts from the compressor and to prevent steam, water, or waste being blown or drawn into a compressor intake.

20.B.10 No valve shall be installed in the air intake pipe to an air compressor with an atmospheric intake.

20.B.11 The air discharge piping from the compressor to the air

receiver shall be at least as large as the discharge opening on the air compressor.

20.B.12 A stop valve shall be installed between the air receiver and each piece of stationary utilization equipment at a point convenient to the operator and a stop valve shall be installed at each outlet to which an air hose may be attached.

20.B.13 If a stop valve is installed between the compressor and the receiver, spring-loaded safety valves shall be installed between the air compressor and the stop valve.

a. The capacity of safety valves shall be sufficient to limit pressure in the air discharge piping to 10% above the working pressure of the piping.

b. Stop valves shall preferably be of the gate type: if a globe valve is used, it shall be so installed that the pressure is under the seat and that the valve will not trap condensation.

20.B.14 Provision shall be made in compressed air and gas systems for expansion and contraction and to counteract pulsation and vibration.

20.B.15 Piping shall be equipped with traps or other means for removing liquid from the lines.

20.B.16 Air discharge piping shall be installed to eliminate possible oil pockets.

20.B.17 Installation and location of air receivers.

a. Air receivers shall be installed so that all drains, hand holes, and manholes are accessible.

b. Air receivers should be supported with sufficient clearance to permit a complete external inspection and to avoid corrosion of external surfaces.

c. An air receiver shall not be buried underground or located in an inaccessible place.

d. The receiver should be located to keep the discharge pipe as short as possible.

e. The receiver should be located in a cool place to facilitate condensation of moisture and oil vapors.

20.B.18 A drain valve shall be installed at the lowest point of every air receiver for the removal of accumulated oil and water.

20.B.19 Automatic traps may be installed in addition to drain valves.

20.B.20 The drain valve on the air receiver shall be opened and the receiver drained often enough to prevent the accumulation of excessive liquid in the receiver.

20.B.21 No tool change or repair work shall be done until the stop valve in the air line supplying the equipment is closed.

20.B.22 Soapy water or any suitable non-toxic, non-inflammable solution may be used for cleaning the system.

20.B.23 Hose and hose connections used for conducting compressed air to utilization equipment shall be designed for the pressure and service to which they are subjected.

20.C BOILERS AND SYSTEMS

20.C.01 Provisions of the ASME Boiler and Pressure Vessel Code shall apply in the construction, operation, maintenance, and inspection of steam boilers and pressure vessels.

20.C.02 Inspection.

a. Inspections shall be made to assure that all safety devices

affecting operation of the firing equipment are installed in such a location that they cannot be isolated from the heat source by the closing of a valve.

b. Boilers which have undergone major structural repairs or which have been relocated during the 12 calendar months for which certification has been made shall be reinspected and a new certificate posted before being put into operation.

20.C.03 When any boiler is being placed in service or restored to service after repairs to control circuits or safety devices, an operator shall be in constant attendance until controls have functioned through several cycles and equipment has been fully placed in service.

20.C.04 Fusible plugs shall be provided on all boilers, other than those of the water tube type.

a. Fusible plugs shall be replaced at inspections.

b. When necessary to renew fusible plugs between inspections, a written report covering the circumstances and giving make and heat number of plugs removed and inserted shall be forwarded to the responsible boiler inspector.

20.C.05 All boilers shall be equipped with water columns, gauge glass, and try cocks approved by a nationally-recognized testing laboratory.

a. Gauge glasses and water columns shall be guarded.

b. When shutoffs are used on the connections to a water column, they shall be approved locking or sealing type.

20.C.06 All boilers shall be equipped with blowoff cocks or valves approved by a nationally-recognized testing laboratory; the blowoff line shall be arranged so that leakage can be observed by the operator.

20.D COMPRESSED GAS CYLINDERS

20.D.01 Compressed gas cylinders shall be visually inspected in accordance with 49 CFR Parts 171-179 and the CGA Pamphlets C-6 and C-8.

20.D.02 All Government owned cylinders shall be color coded and the gas contained identified by name in accordance with Mil-Std 101B, *Color Code for Compressed Gas Cylinders*.

20.D.03 Storage.

a. Cylinders shall be stored in well-ventilated locations.

b. Cylinders containing the same gas shall be stored in a segregated group; empty cylinders shall be stored in the same manner.

c. Cylinders in storage shall be separated from flammable or combustible liquids and from easily ignitible materials (such as wood, paper, packaging materials, oil, and grease) by at least 12 m (40 ft) or by fire resistive partition having at least a one hour rating.

d. Cylinders containing oxygen or oxidizing gases shall be separated from cylinders in storage containing fuel gases by at least 6 m (20 ft) or a fire resistive partition, having at least a one hour rating.

e. Areas containing hazardous gas in storage shall be appropriately placarded.

20.D.04 Smoking shall be prohibited wherever cylinders are stored, handled, or used.

20.D.05 Cylinders shall be protected from physical damage, electric current, and extremes of temperature: the temperature of cylinders shall not be allowed to exceed 54° C (130° F).

20.D.06 Cylinders containing oxygen and acetylene (or other fuel gas) shall not be taken into confined spaces.

20.D.07 Cylinder valves and valve caps.

a. Cylinder valves shall be closed when cylinders are in storage, in transit, not in use, or empty.

b. Cylinder valve caps shall be in place when cylinders are in storage, in transit, or whenever the regulator is not in place.

20.D.08 All compressed gas cylinders in service shall be secured in substantial fixed or portable racks or hand trucks.

20.D.09 Compressed gas cylinders transported by crane, hoist, or derrick shall be securely transported in cradles, nets, or skip pans, and never directly by slings, chains or magnets.

20.D.10 Compressed gas cylinders shall be secured in an upright position at all times, except when being hoisted (except acetylene cylinders shall never be laid horizontal): horizontal storage configurations approved for transportation are permitted for cylinders other than acetylene.

20.D.11 Valve wrench or wheel shall be in operating position when cylinder is in use.

a. Valves shall be opened slowly.

b. Quick closing valves on fuel gas cylinders shall not be opened more than 1-1/2 turns.

20.D.12 Cylinders shall be used only for their designed purpose of containing a specific compressed gas.

20.D.13 Cylinders shall be refilled only by qualified persons.

20.D.14 Cylinders shall be handled in a manner which will not

weaken or damage the cylinder or valve.

20.D.15 Leaking cylinders shall be moved to an isolated location out of doors, the valve shall be cracked and gas allowed to escape slowly.

a. Personnel and all sources of ignition shall be kept away.

b. The cylinder shall be tagged **DEFECTIVE**.

20.D.16 Cylinders containing different gases shall not be bled simultaneously in close proximity of each other.

20.D.17 Bleeding of cylinders containing toxic gases shall be accomplished only under the direct supervision of qualified personnel.

20.D.18 Oxygen cylinders and fittings shall be kept away from oil or grease.

a. Cylinders, cylinder valves, couplings, regulators, hose, and apparatus shall be kept free from oil or greasy substance and shall not be handled with oily hands or gloves.

b. Oxygen shall not be directed at oily surfaces, greasy cloths, or within a fuel oil or other storage tank or vessel.

20.D.19 Oxygen and fuel gas pressure regulators, including their related gauges, shall be in proper working order while in use.

DEFINITIONS

Air receiver: a tank used for the storage of air discharged from the compressor; used to help eliminate pressure pulsations in the discharge line.

Automatic trap: a device for removing moisture from compressed gas systems.

Fusible plug: a device designed to relieve pressure and to indicate certain conditions that contribute to low water.

Safety and relief valves: valves which relieve excess pressure or vacuum (depending on their design) that would otherwise damage equipment or cause injury to personnel.

Unfired pressure vessels: vessels which can withstand internal pressure or vacuum but do not have the direct fire of burning fuel or electric heaters (heat may be generated in the vessel due to chemical reactions or the application of heat to vessel contents).

SECTION 21

SAFE ACCESS AND FALL PROTECTION

21.A GENERAL

21.A.01 Safe access shall be provided to all work areas.

a. Where there is a horizontal or vertical break of 48 cm (19 in) or more in a route of access, a stairway, ladder, ramp, or personnel hoist shall be provided.

b. Means of access constructed of metal shall not be used for electrical work or where they might contact electrical conductors.

c. When a structure has only one means of access between levels, that means shall be kept clear to permit free passage of employees: if work is performed in an area that restricts free passage, a second means of access shall be provided.

d. When a structure has two or more means of access between levels, at least one means of access shall always be available for free passage of employees.

21.A.02 The hazard analysis, approved by the designated authority, for the activity in which means of access are to be used shall delineate the following:

a. the design, construction, and maintenance of the means of access, and

b. erection and dismantling procedures, including provisions for providing fall protection during the erection or dismantling when the erection or dismantling involves work at heights which expose the workers to falls of 1.8 m (6 ft) or more.

21.A.03 Job-made means of access shall be designed to support, without failure, at least four times the maximum

intended load.

21.A.04 Means of access shall not be loaded beyond the maximum intended load for which they were designed or beyond their manufactured rated capacity: when loaded, planking and decking shall not deflect more than 1/60 the span length.

21.A.05 The width of accessways shall be determined by the purpose for which they are built and shall be sufficient to provide safe passage for supplying materials and movement of personnel: except for ladders, in no case shall the width be less than 46 cm (18 in). ***> See 21.D.02***

21.A.06 Load-carrying timber members shall be a minimum of 3.1 m€ MPa (1,500 lb-ft/in$^{2)}$ (stress grade) construction grade lumber.

a. All dimensions are nominal sizes (except where rough sizes are noted) as provided by NBS Voluntary Product Standard PS 20-70, American Softwood Lumber Standard, published by the National Bureau of Standards of the US Department of Commerce: where rough sizes are noted, only rough or undressed lumber of the size specified will satisfy minimum requirements.

b. Lumber shall be reasonably straight-grained and free of shakes, checks, splits, cross grains, unsound knots or knots in groups, decay and growth characteristics, or any other condition which will decrease the strength of the material.

21.A.07 Supporting members and foundations shall be of sufficient size and strength to safely distribute loading.

a. Supporting members shall be placed on a firm, smooth foundation that will prevent lateral displacement.

b. Unstable objects such as barrels, boxes, loose bricks, or concrete blocks shall not be used as supports.

21.A.08 Vertical members (e.g., poles, legs, or uprights) shall be plumb and securely braced to prevent swaying or displacement.

21.A.09 The design and construction or selection of planking and platform for means of access shall be based upon either the number of persons for which they are rated or the uniform load distribution to which they will be subjected - whichever is the more restrictive in accordance with the following tables:

RATED LOAD CAPACITY	DESIGNED AND CONSTRUCTED TO CARRY	LOAD PLACED
one person	115 kg	at center of span
two persons	115 kg 115 kg	45 cm to left of center of span and 45 cm to right of center of span
three persons	115 kg 115 kg 115 kg	at center of span and 45 cm to left of center of span and 45 cm to right of center of span

RATED LOAD CAPACITY	MAXIMUM INTENDED LOAD
light duty	1200 kg per square meter applied uniformly over entire span area
medium duty	2400 kg per square meter applied uniformly over entire span area
heavy duty	3600 kg per square meter applied uniformly over entire span area

21.A.10 Planking.

a. All wood planking shall be selected for scaffold plank use as recognized by grading rules established by a recognized independent inspection agency for the species of wood used. The maximum permissible spans for 5 cm x 25 cm (2 in x 10 in)

(nominal) or 5 cm x 22.5 cm (2 in x 9 in) (rough) solid sawn wood planks shall be as follows:

Maximum intended load, Pa	Maximum permissible span - full thickness undressed lumber, m	Maximum permissible span - nominal thickness lumber, m
1,200	3.0	2.4
2,400	2.4	1.8
3,600	1.8	n/a

The maximum permissible span for 3 cm x 22.5 cm ($1^1/_4$ in x 9 in) or wider wood plank of full thickness with a maximum intended load of 50 psf shall be 1.2 m (4 ft).

b. Fabricated planks and platforms may be used in lieu of solid sawn wood planks. Maximum spans for such units shall be as recommended by the manufacturer based on the maximum intended load being calculated as specified in Table 21-1.

c. Planking shall be secured to prevent loosening, tipping, or displacement and supported or braced to prevent excessive spring or deflection; intermediate beams shall be provided to prevent dislodgement of planks due to deflection. ***> See 21.A.04***

d. Planking shall be laid with edges close together across the entire access surface: there will be no spaces through which personnel, equipment, or material could fall.

e. When planking is lapped, each plank shall lap its supports at least 30 cm (12 in).

f. Where the ends of planks abut each other to form a flush floor, the butt joint shall be at the centerline of a pole and abutted ends shall rest on separate bearers.

21.A.11 Accessways shall have overhead protection equal to 5 cm (2 in) solid planking whenever work is performed over them

or if personnel are exposed to hazards from falling objects.

21.A.12 Nails shall be driven full length; double-headed nails shall not be used on decks, guardrails, or handrails.

21.A.13 Accessways shall be inspected daily and maintained in a safe manner.

a. Accessways shall be kept free of ice, snow, grease, mud, debris or any other material or equipment which could obstruct passage, cause a tripping hazard, or render them unsafe in any other way.

b. Where accessways are slippery, abrasive material shall be used to assure safe footing.

c. All obstructions or projections into an accessway shall be removed or conspicuously marked: obstructions or projections which are sharp, pointed, or which may cause lacerations, contusions, or abrasions shall be covered with protective material.

d. Accessways, including their accessories, which become damaged or weakened shall not be used until they are repaired or replaced.

21.A.14 When moving platforms to the next level, the old platform shall be left undisturbed until the new bearers have been set to receive the platform planks.

21.A.15 Fall protection.

a. Employees shall be protected by standard guardrail, catch platforms, temporary floors, safety nets, personal fall protection devices, or the equivalent, in the following situations:

(1) on accessways (excluding ladders) or work platforms from which they may fall 1.8 m (6 ft) or more,

(2) on accessways or work platforms over water, machinery, or dangerous operations,
(3) on runways from which they may fall 1.2 m (4 ft) or more.

b. Every stairway and ladder way floor opening shall be guarded on all exposed sides, except the entrance opening, by securely anchored standard guardrail; entrance openings shall be offset or provided with a gate to prevent anyone walking into the opening.

c. Platforms, except scaffolds, 1.2 m to 1.8 m (4 ft to 6 ft) in height, having a minimum horizontal dimension in either direction of less than 115 cm (45 in) shall have standard railing installed on all open sides and ends of the platform or the workers shall use personal fall protection.

21.A.16 Training.

a. Each employee who might be exposed to fall hazards shall be trained by a competent person qualified in the following areas, in the safe use of accessways and fall protection systems and the recognition of hazards related to their use, including:

(1) the nature of access and fall hazards in the work area,
(2) the correct procedures for constructing, erecting, maintaining, using, and dismantling accessways and fall protection systems,
(3) the maximum intended load-carrying capacities of accessways and fall protection systems, and
(4) all applicable requirements from this section, and
(5) the limitations on the use of mechanical equipment during the performance of roofing work on low-sloped roofs, the correct procedures for handling and storage of equipment and materials, and the erection of overhead protection.

b. Retraining shall be provided as necessary for employees to maintain an understanding of these subjects.

c. The employer shall verify employee training by a written certification record which identifies the employee trained, the dates of the training, and the signature of the trainer.

21.B STANDARD GUARDRAILS AND HANDRAILS

21.B.01 A standard guardrail shall consist of toprails, midrails, and posts, and shall have a vertical height of 105 cm +/- 7.5 cm (42 in +/-3 in) from the upper surface of the toprail to the floor, platform, runway, or ramp level. Standard guardrail systems shall be provided with toeboards on all open sides/ends at locations where persons are required or permitted to pass or work under the elevated platform or where needed to prevent persons and material from falling from the elevated platform.

21.B.02 Guardrail systems shall be designed to meet the following requirements.

a. capable of withstanding, without failure, a force of at least 90 kg (200 lbs) applied within 5 cm (2 in) of the top edge, in any outward or downward direction, at any point along the top edge.
b. when the force described in a, above, is applied in a downward direction, the top edge of the guardrail shall not deflect to a height less than 97.5 cm (39 in) above the walking/working level.
c. midrails, screens, mesh, intermediate vertical members, solid panels, and equivalent structural members shall be capable of withstanding, without failure, a force of at least 68 kg (150 lb) applied in any downward or outward direction at any point along the midrail or other member.

21.B.03 Dimensions of standard guardrail components. The following guidelines may be used in designing guardrail systems to satisfy the requirements specified in 21.B.02. The employer is still responsible for designing a complete system and assembling these components in accordance with 21.B.02.

a. For wood railings:

(1) toprails shall be of at least 5 cm x 10 cm (2 in x 4 in) lumber,
(2) midrails shall be at least 2.5 cm x 15 cm (1 in x 6 in) lumber, and
(3) posts shall be at least 5 cm x 10 cm (2 in x 4 in) lumber spaced not to exceed 2.4 m (8 ft) on centers.

b. For pipe railings:

(1) toprails and midrails shall be at least 3.8 cm (1.5 in) nominal diameter (schedule 40 pipe) and
(2) posts shall be at least 3.8 cm (1.5 in) nominal diameter (schedule 40 steel pipe) spaced not more than 2.4 m (8 ft) on centers.

c. For structural steel railings:

(1) toprails and midrails shall be at least 5 cm x 5 cm x 1 cm (2 in x 2 in x 3/8 in) angles and
(2) posts shall be at least 5 cm x 5 cm x 1 cm (2 in x 2 in x 3/8 in) angles spaced not more than 2.4 m (8 ft) on centers.

21.B.04 Guardrail systems shall be so surfaced as to prevent injury to an employee from punctures or lacerations and to prevent snagging of clothing.

21.B.05 Toprails and midrails.

a. Midrails shall be halfway between the toprails and the floor, platform, runway, or ramp.

b. The ends of the toprails and midrails shall not overhang the terminal posts except where such overhang does not create a projection hazard.

c. Synthetic or natural fiber ropes shall not be used as toprails or midrails: wire rope may be used as toprails or midrails if

tension is maintained to provide not more than 7.5 cm (3 in) deflection, in any direction from the center line, under a 90 kg (200 lb), if support posts are located not more than 2.4 m (8 ft) apart, and if the wire rope is flagged at not more than 1.8 m (6 ft) intervals with high-visibility material.

21.B.06 Toeboards.

a. Toeboards shall be 2.5 cm x 10 cm (1 in x 4 in) (minimum 10 cm (4 in) (nominal) vertically) lumber or the equivalent.

b. Toeboards shall be securely fastened in place and have not more than 6.4 mm (1/4 in) clearance above floor level.

c. Toeboards shall be made of any substantial material, either solid or with openings not greater than 2.5 cm (1 in) in greatest dimension.

d. Where material is piled to such a height that a standard toeboard does not provide protection, paneling or screening from floor to toprail or midrail shall be provided.

21.B.07 Guardrails receiving heavy stresses from employees trucking or handling materials shall be provided additional strength by using heavier stock, closer spacing of posts, bracing, or by other means.

21.B.08 Handrails.

a. A standard handrail shall be of construction similar to a standard guardrail except that it is mounted on a wall or partition and does not include a midrail.

b. Handrails shall have smooth surfaces along the top and both sides.

c. Handrails shall have an adequate handhold for anyone grasping it to avoid falling.

d. Ends of handrails shall be constructed so as not to constitute a projection hazard.

e. The height of handrails shall be not more than 85 cm (34 in) nor less than 75 cm (30 in) from upper surface of handrail to surface of tread, in line with face of riser or to surface of ramp.

21.B.09 All handrails and railings shall be provided with a clearance of approximately 7.5 cm (3 in) between the handrail or railing and any other object.

21.C PERSONAL FALL PROTECTION DEVICES AND SAFETY NETS

21.C.01 Personal fall protection devices (personal fall arrest systems and positioning devices), independently attached or attended, or safety nets shall be used when performing such work as the following when the requirements of 22.A.04a cannot be met.

a. work in hoppers, bins, silos, tanks, or other confined spaces;
b. work on hazardous slopes, structural steel, poles;
c. erection or dismantling of safety nets;
d. tying reinforcing bars;
e. work from boatswain's chairs, swinging scaffolds, or other unguarded locations at elevations greater than 1.8 m (6 ft);
f. work on skips and platforms used in shafts by crews when the skip or cage does not block the opening to within 0.3 m (1 ft) of the sides of the shaft, unless cages are provided.

21.C.02 Selection of personal fall protective equipment shall be based on the type of work; the work environment; the weight, size, and shape of the user; the type and position of anchorage; and the length of the lanyard. ***> See Section 05.F***

21.C.03 Personal fall arrest systems, when stopping a fall, shall:

a. limit maximum arresting force on an employee to 820 kg

(1,800 lb) when used with a body harness;
b. be rigged such that an employee can neither free fall more than 1.8 m (6 ft) nor contact any lower level or other physical hazard;
c. bring an employee to a complete stop and limit maximum deceleration distance an employee travels to 1 m (3.5 ft); and
d. have sufficient strength to withstand twice the potential impact energy of an employee free falling a distance of 1.8 m (6 ft) or the free fall distance permitted by the system, whichever is less.

21.C.04 Positioning device systems shall:

a. be rigged such that an employee cannot free fall more than 0.6 m (2 ft);
b. be secured to an anchorage capable of supporting at least twice the potential impact load of an employee's fall or 1360 kg (3,000 lb), whichever is greater.

21.C.05 Body belts and harnesses shall have two lanyards when necessary to insure that a person is tied-off with at least one lanyard at all times, or where the lanyard is the primary support for operations such as rock-scaling and high-wall concrete finishing.

21.C.06 The manufacturer's recommendations shall be followed in the fitting, adjustment, use, inspection, testing, and care of personal fall protection equipment: before an employee uses personal fall protection equipment, he/she shall receive instruction in these recommendations and the potential fall hazards of the activity.

21.C.07 Personal fall protection equipment shall be inspected before use each day to determine that it is in safe working condition: defective equipment shall be immediately replaced.

21.C.08 Personal fall protection equipment shall be used only for employee safeguarding: any such equipment subjected to impact

loading shall be immediately removed from service, and shall not be used again for employee safeguarding.

21.C.09 Lifelines.

a. When vertical lifelines are used, each employee shall be attached to a separate lifeline.

b. On suspended scaffolds or similar work platforms with horizontal lifelines which may become vertical lifelines, the devices used to connect to a horizontal lifeline shall be capable of locking in both directions on the lifeline.

c. Horizontal lifelines shall be designed, installed, and used under the supervision of a qualified person as part of a complete fall arrest system which maintains a safety factor of at least two.

d. Lifelines used on rock-scaling operations or in areas where the line may be subject to cutting or abrasion shall be specifically designed and constructed for such applications.

21.C.10 Anchorage and attachment.

a. Anchorages used for attachment of personal fall arrest equipment shall be independent of any anchorage used to support or suspend platforms and shall be capable of supporting at least 2,270 kg (5,000 lb) per employee attached.

b. The attachment point for body belts shall be located in the center of the wearer's back; the attachment point for body harnesses shall be located in the center of the wearer's back near shoulder level, or above the wearer's head.

c. Personal fall arrest systems shall not be attached to guardrail systems nor shall they be attached to hoists.

d. When a personal fall arrest system is used at hoist areas, it shall be rigged to allow the movement of the employee only as

far as the edge of the walking/working surface.

21.C.11 Installation of safety nets.

a. Safety nets shall be installed as close under the work surfaces as practical but in no case more than 7.5 m (25 ft) below such work surface. Nets shall be hung with sufficient clearance to prevent contact with the surfaces or structures below: such clearance shall be determined by impact load testing. When nets are used on bridges, the potential fall area from the walking/working surface to the net shall be unobstructed.

b. Nets shall extend outward from the outermost projection of the work surface as follows:

VERTICAL DISTANCE FROM WORKING LEVEL TO HORIZONTAL PLANE OF NET	MINIMUM REQUIRED HORIZONTAL DISTANCE OF OUTER EDGE OF NET FROM EDGE OF WORKING SURFACE
up to 1.5 m	2.4 m
1.5 m up to 3.0 m	3.0 m
more than 3.0 m	4 m

c. Operations requiring safety net protection shall not be undertaken until the net(s) is in place and has been tested without failure. ***> See 05.G.02 for load testing***

21.C.12 Debris nets.

a. When used with personnel safety nets, debris nets shall be secured on top of the personnel safety net but shall not compromise the design, construction, or performance of the personnel nets.

b. A competent person shall determine, and document, the size, weight, and height-of-fall of anticipated debris: the debris

netting shall have a mesh of the size and strength sufficient to contain the expected debris without penetration when properly supported.

21.C.13 Debris shall be removed from safety and debris nets; nets and debris shall be protected from sparks and hot slag resulting from welding and cutting operations.

21.C.14 Inspection of safety and debris nets.

a. Safety and debris nets shall be inspected by a competent person in accordance with the manufacturer's recommendations.

b. Inspections shall be conducted after installation, at least weekly thereafter, and following any alteration, repair, or any occurrence which could affect the integrity of the net system. Inspections shall be documented.

c. Defective nets shall not be used; defective components shall be removed from service

21.C.15 If any welding or cutting operations occur above the nets, weld protection shall be provided. The frequency of inspections shall be increased in proportion to the potential for damage to the nets.

21.C.16 Materials, scrap pieces, equipment, and tools which have fallen into the safety net shall be removed as soon as possible from the net and at least before the next work shift.

21.D LADDERS

21.D.01 The construction, installation, and use of ladders shall conform to the following, as applicable.

a. *Safety Codes for Portable Ladders*, ANSI A14.1;
b. *Portable Metal Ladders*, ANSI A14.2;

c. *Fixed Ladders*, ANSI A14.3; and
d. *Job-Made Ladders*, ANSI A14.4.

21.D.02 Length.

a. All portable ladders shall be of sufficient length and shall be placed so that workers will not stretch or assume a hazardous position.

b. Portable ladders used as temporary access shall extend at least 0.9 m (3 ft) past the landing.

(1) When a 0.9 m (3 ft) extension is not possible, a grasping device (such as a grab rail) shall be provided to assist employees in mounting and dismounting the ladder.

(2) In no case shall the length of the ladder be such that ladder deflection under a load would, by itself, cause the ladder to slip from its support.

c. The length of portable step ladders shall not exceed 6 m (20 ft).

d. When splicing is required to obtain a given length of side rail, the resulting side rail must be at least equivalent in strength to a one-piece side rail made of the same material.

21.D.03 Width.

a. The minimum clear distance between the sides of individual-rung/step ladders shall be 40 cm (16 in).

b. The minimum clear distance between side rails for all portable ladders shall be 29 cm (11.5 in).

21.D.04 Spacing of rungs, cleats, and steps.

a. On portable ladders, spacing shall be not less than 25 cm

(10 in), nor more than 35 cm (14 in), apart as measured from their centerlines.

b. On step stools, spacing shall be not less than 20 cm (8 in), nor more than 30 cm (12 in), apart as measured from their centerlines.

c. On extension trestle ladders, spacing on the base section shall be not less than 20 cm (8 in), nor more than 45 cm (18 in), apart as measured from their centerlines; on the extension section spacing shall not be less than 6 inches, nor more than 30 cm (12 in), apart as measured from their centerlines.

21.D.05 Ladders shall be surfaced so as to prevent injury to an employee from punctures or lacerations and to prevent snagging of clothing.

21.D.06 Wood ladders shall not be coated with any opaque covering, except for identification or warning labels which may be placed on only one face of a side rail.

21.D.07 A metal spreader bar or locking device shall be provided on each stepladder to hold the front and back sections in an open position.

21.D.08 Set-up.

a. Ladders shall not be placed in passageways, doorways, drives, or any locations where they may be displaced by any other work unless protected by barricades or guards.

b. Portable ladders shall be used at such a pitch that the horizontal distance from the top support to the foot of the ladder will not be greater than one-fourth the vertical distance between these points.

c. Wood job-made ladders with spliced rails shall be used at an angle such that the horizontal distance is one-eighth the length

of the ladder.

d. Ladders shall be secured by top, bottom, and intermediate fastenings as required to hold them rigidly in place and to support the loads which will be imposed upon them.

e. The steps or rungs of all ladders shall be set to provide at least 17.5 cm (7 in) toe space from the inside edge of the rung to the nearest interference.

f. The top of a non-self supporting ladder shall be placed with the two rails supported equally unless it is equipped with a single support attachment.

21.D.09 Use.

a. No work requiring lifting of heavy materials or substantial exertion shall be done from ladders.

b. When ladders are the only means of access to or from a working area for 25 or more employees, or when a ladder is to serve simultaneous two-way traffic, double-cleated ladders shall be used.

c. Portable ladders shall have slip-resistant feet.

d. Ladders shall not be moved, shifted, or extended while occupied.

e. The top or top step of a step ladder shall not be used as a step.

f. Ladders shall be inspected for visible defects on a daily basis and after any occurrence that could affect their safe use.

g. Broken or damaged ladders shall be immediately tagged "**DO NOT USE**," or similar wording, and withdrawn from service until restored to a condition meeting their original design.

21.D.10 Fixed ladders shall comply with the requirements in Appendix J.

21.D.11 Single-rail ladders shall not be used; three-legged ladders may be used for specific tasks if approved by the designated authority.

21.E STAIRWAYS

21.E.01 On all structures 6 m (20 ft) or more in height, stairways shall be provided during construction.

a. Where permanent stairways are not installed concurrently with the construction of each floor, a temporary stairway shall be provided to the work level.

b. Alternatives to the use of stairways shall be addressed in the activity hazard analysis and shall be accepted by the designated authority.

21.E.02 Design.

a. Temporary stairways shall have landings not less than 75 cm (30 in) in the direction of travel and extend at least 55 cm (22 in) in width at every 3.6 m (12 ft) or less of vertical rise.

b. Stairs shall be installed between 30° and 50° from horizontal.

c. Risers shall be of uniform height and treads of uniform width.

21.E.03 Metal pan landings and metal pan treads, when used, shall be secured in place and filled with concrete, wood, or other material at least to the top of each pan.

21.E.04 Wooden treads shall be nailed in place.

21.E.05 Every flight of stairs with four or more risers or rising more than 75 cm (30 in) shall have standard stair railings (defined

below) or standard handrails. ***> See 21.B for standard handrail requirements***

a. On stairways less than 1.1 m (44 in) wide having both sides enclosed, at least one standard handrail shall be installed, preferably on the right side descending.

b. On stairways less than 1.1 m (44 in) wide having one side open, at least one standard stair railing shall be installed on the open side.

c. On stairways less than 1.1 m (44 in) wide having both sides open, one standard stair railing shall be installed on each side.

d. On stairways more than 1.1 m (44 in) wide, but less than 2.2 m (88 in) wide, one standard handrail shall be installed on each enclosed side and one standard stair railing installed on each open side.

e. On stairways 2.2 m (88 in) or more wide, one standard handrail shall be installed on each enclosed side, one standard stair railing on each exposed side, and a standard handrail in the middle of the stairway.

21.E.06 Standard stair railing shall be installed around all stair wells.

21.E.07 Standard stair railing.

a. A stair railing shall have a vertical height not less than 90 cm (36 in) from the upper surface of the stair rail system to the surface of the tread, in line with the face of the riser at the forward edge of the tread.

b. Midrails, screens, mesh, intermediate vertical members, or equivalent intermediate structural members shall be provided between the toprail and the stairway steps.

(1) Midrails shall be located at a height midway between the top edge of the stairway system and the stairway steps.

(2) Screens or mesh, when used, shall extend from the toprail to the stairway steps and along the entire opening between rail supports.

(3) Intermediate vertical members, when used, shall be not more than 48 cm (19 in) apart.

(4) Other structural members, when used, shall be installed in such a manner that there are no openings in the stair rail system that are more than 48 cm (19 in) wide.

21.E.08 Doors or gates opening onto a stairway shall have a platform; swinging of the door shall not reduce the width of the platform to less than 50 cm (20 in).

21.E.09 Spiral stairways shall not be permitted except for special limited usage and secondary access where it is not practical to provide a conventional stairway.

21.F RAMPS, RUNWAYS, AND TRESTLES

21.F.01 Inclined ramps, runways, and platforms shall be as flat as conditions will permit; where the incline exceeds 1-on-5 (1 ft in a 5 ft run), traverse cleats shall be applied to the working surface.

21.F.02 Vehicle ramps, trestles, and bridges on which foot traffic is permitted shall be provided with a walkway and guardrail outside the roadway. The roadway structures shall be provided with wheel guards, fender logs, or curbs not less than 20 cm (8 in) high placed parallel and secured to the sides of the runway.

21.F.03 All locomotive and gantry crane trestles which extend into or pass over a work area, except where a crane is hoisting between rails, shall be decked solid with not less than 5 cm (2 in) planking, or the equivalent, for the full length of the extension into

the working area.

21.F.04 When used in lieu of steps, ramps shall be provided with cleats to ensure safe access.

21.G CRANE- OR DERRICK-HOISTED PERSONNEL PLATFORMS

21.G.01 The use of a crane or derrick to hoist personnel on a platform is prohibited except:

a. for routine access of employees to underground construction via a shaft;
b. when the erection, use, or dismantling of conventional means of access (e.g., personnel hoist, scaffold, ladder, aerial lift, etc.) would be more hazardous than the use of a crane or derrick hoisted personnel platform; or
c. when the erection, use, or dismantling of conventional means of reaching the worksite (e.g., personnel hoist, scaffold, ladder, aerial lift) is not possible due to structural design or workplace conditions.

21.G.02 Other requirements for crane or derrick hoisting of personnel platforms.

a. Cranes and derricks shall comply with the requirements of Section 16.

b. Personnel platforms shall comply with the requirements of Section 22.F

21.G.03 Operational criteria.

a. Hoisting of the personnel platform shall be in a slow, controlled, cautious manner with no sudden movements.

b. Load lines shall be capable of supporting, without failure, at least 7 times the maximum intended load except where

rotation-resistant rope is used the lines shall be capable of supporting, without failure, at least 10 times the maximum intended load: the required design factor is achieved by taking the current safety factor of 3.5 and applying the 50% derating of the crane capacity.

c. Load and boom hoist brakes, swing brakes, and locking devices such as pawls and dogs shall be engaged when hoisted personnel are in a stationary position.

d. The crane shall be uniformly level within 1% of level grade and located on firm footing: cranes equipped with outriggers shall have them all fully deployed following manufacturer's specifications, as far as practical, when hoisting personnel.

e. The total weight of the loaded personnel platform and related rigging shall not exceed 50% of the rated capacity for the radius and configuration of the crane or derrick.

f. The use of machines having live booms is prohibited.

21.G.04 Instruments and components.

a. Cranes and derricks with variable angle booms shall be equipped with a boom angle indicator, readily visible to the operator.

b. Cranes with telescoping booms shall be equipped with a device to indicate clearly to the operator, at all times, the boom's extended length, or an accurate determination of the load radius to be used during the lift shall be made prior to hoisting personnel.

c. A positive acting device shall be used to prevent contact between the load block or overhaul ball and the boom tip (anti-two blocking device), or a system shall be used which deactivates the hoisting action before damage occurs in the

event of a two-blocking situation (two-block damage prevention feature).

d. The load line hoist drum shall have a system or device on the power train, other than the load hoist brake, which regulates the lowering rate of speed of the hoist mechanism (controlled load lowering): free-fall is prohibited.

21.G.05 Trial lift and inspection.

a. A trial lift with the unoccupied personnel platform loaded at least to the anticipated lift weight shall be made from ground level, or any other location where employees will enter the platform, to each location at which the personnel platform is to be hoisted and positioned.

(1) This trial lift shall be made immediately prior to pacing personnel on the platform.

(2) The operator shall determine that all systems, controls and safety devices are activated and functioning properly; that no interferences exist; and that all configurations necessary to reach those work locations will allow the operator to remain under the 50% limit of the hoist's rated capacity.

(3) Materials and tools to be used during the actual lift can be loaded in the platform (evenly distributed and secured) for the trial lift.

(4) A single trial lift may be performed at one time for all locations that are to be reached from a single set-up position.

b. The trial lift shall be repeated prior to hoisting employees whenever the crane or derrick is moved and set up in a new location or returned to a previously used location and when the lift route lift is changed unless the operator determines that the route change is not significant.

c. After the trial lift and just prior to hoisting employees, the platform shall be hoisted a few inches and inspected to ensure that it is secure and properly balanced.

d. A visual inspection of the crane or derrick, rigging, personnel platform, and the crane or derrick support base shall be conducted by a competent person immediately after the trial lift to determine whether the testing has exposed any defect or produced any adverse effect upon any component or structure.

e. Any defects found during inspections shall be corrected before hoisting personnel.

21.G.06 Proof testing.

a. At each job site, prior to hoisting employees on the personnel platform, and after any repair or modification, the platform and rigging shall be proof tested to 125% of the platform's rated capacity by holding it in a suspended position for five minutes with the test load evenly distributed on the platform (this may be done concurrently with the trial lift).

b. After proof testing, a competent person shall inspect the platform and rigging.

21.G.07 Employees shall not be hoisted unless the following conditions are determined to exist:

a. the load test and proof test requirements are satisfied,
b. hoist ropes are free of kinks,
c. multiple part lines are not twisted around one another,
d. the primary attachment is centered over the platform, and
e. the hoisting system is inspected if the load rope is slack to ensure all ropes are properly seated on drums and in sheaves.

21.G.08 Work practices.

a. Employees (except a designated signalperson) shall keep all

parts of the body inside the platform during raising, lowering, and positioning.

b. Before employees enter or exit a hoisted personnel platform that is not landed, the platform shall be secured to the structure, unless securing to the structure creates an unsafe situation.

c. Taglines shall be used unless their use presents a hazard.

d. The crane or derrick operator shall remain at the controls at all times, with the crane engine running, when the platform is occupied.

e. Hoisting of employees shall be discontinued upon indication of any dangerous weather conditions or other impending danger.

f. Employees being hoisted shall remain in continuous sight of and in direct communication with the operator or signal person; in situations where this is not possible, direct communication by radio shall be maintained at all times.

21.G.09 Personal fall protection.

a. Except over water, employees occupying the personnel platform shall use a body belt/harness system with a lanyard appropriately attached to the lower load block or overhaul ball or to a structural member within the personnel platform capable of supporting a fall impact for employees using the anchorage.

b. When working over water, personal floatation devices and lifesaving and safety skiffs shall be provided and used as specified in Sections 5.I and 5.J.

21.G.10 Traveling.

a. Hoisting of personnel while the crane is traveling is prohibited, except for:

(1) portal, tower, and locomotive cranes, or
(2) where it is demonstrated and documented that there is no less hazardous way to perform the work.

b. If the requirements of 21.G.10a are satisfied, the following safeguards shall be implemented while cranes travel with hoisted personnel:

(1) crane travel shall be restricted to a fixed track or runway,
(2) travel shall be limited to the load radius of the boom used during the lift,
(3) the boom must be parallel to the direction of travel,
(4) a completed trial run shall be performed to test the route of travel before employees are allowed to occupy the platform (this trial run may be performed when the trial lift required by 21.G.05 is performed), and
(5) if travel is done with a rubber-tired carrier, the condition and air pressure of the tires shall be checked; the chart capacity for lifts on rubber shall be used for application of the 50% reduction of rated capacity; outriggers may be partially retracted as necessary for travel.

21.G.11 Pre-lift meeting.

a. A meeting attended by the crane or derrick operator, signal person, employees to be lifted, and the person responsible for the task to be performed shall be held to review the appropriate requirements of this subsection (21.G) and the activity hazard analysis.

b. This meeting shall be held prior to the trial lift at each new work location and shall be repeated for any employees newly assigned to the operation.

21.H PERSONNEL HOISTS AND ELEVATORS

21.H.01 Standards for design, construction, installation or erection, operation, inspection, testing, and maintenance.

a. Design, construction, installation or erection, operation, inspection, testing, and maintenance of personnel hoists and elevators shall be in accordance with the manufacturer's recommendations and the applicable ANSI standard.

(1) Track-guided personnel hoist systems and structures which are temporarily installed inside or outside buildings during construction, alteration, or demolition shall be in compliance with ANSI 10.4, *Safety Requirements for Personnel Hoists*;
(2) Rope-guided personnel hoist systems which are temporarily erected during construction, alteration, or demolition shall be in compliance with ANSI 10.22, *Safety Requirements for Rope-guided and Nonguided Workmen's Hoists*;
(3) Nonguided personnel hoist systems which are temporarily erected during construction, alteration, or demolition shall be in compliance with ANSI A10.8, *Scaffolds, and ANSI 10.22, Safety Requirements for Rope-guided and Nonguided Workmen's Hoists*;
(4) Elevators operating in permanent hoistways on the permanent guide rails for handling personnel during construction shall be in compliance with ANSI A17.1, *Safety Code for Elevators, Dumbwaiters, Escalators, and Moving Walks*.

b. A copy of the manufacturer's manual covering construction, installation or erection, operation, inspection, testing, and maintenance and a copy of the applicable ANSI standard shall be available on site.

c. Personnel hoists and elevators shall comply with applicable requirements from Section 16, Machinery and Mechanized Equipment.

21.H.02 Personnel hoists used in bridge tower construction shall be approved by a registered engineer and erected under the supervision of a registered engineer competent in this field.

21.I ACCESS AND HAUL ROADS

21.I.01 The contractor shall construct necessary access and haul roads.

21.I.02 No employer shall move, or cause to be moved, any equipment or vehicle upon an access or haul road unless the roadway is constructed and maintained to safely accommodate the movement of the equipment or vehicle involved.

21.I.03 When road levels are above working levels, berms, barricades, or curbs shall be constructed to prevent vehicles overrunning the edge or end of embankment.

21.I.04 Roadways shall have a crown and ditches for drainage.

21.I.05 Haul roads shall be constructed to widths suitable for safe operation of the equipment at the travel speeds proposed by the contractor and accepted by the Government's designated authority.

21.I.06 Curves.

a. All curves shall have open sight line and as great a radius as practical.

b. Vehicle speed shall be limited on curves so that vehicles can be stopped within one-half the visible distance of the roadway.

c. The design of horizontal curves shall consider vehicle speed, roadway width and surfacing, and superelevation.

21.I.07 Grades.

a. When necessary, based on grade and machine and load weight, machines shall be equipped with retarders to assist in controlling downgrade descent.

b. The maximum allowable grade shall be limited to 10%.

21.I.08 Lighting shall be provided as necessary.

21.I.09 Traffic control lights, barricades, road markings, signs, and signalpersons for the safe movement of traffic shall be provided in accordance with the Federal Highway Administration's Manual on Uniform Traffic Control Devices and Section 8 of this manual.

21.I.10 For every access and haul road, a plan shall be submitted to the government's designated authority. The plan shall address the following:

a. equipment usage, traffic density, and hours of operation;
b. road layout and widths, horizontal and vertical curve data, and sight distances;
c. sign and signalperson requirements, road markings, and traffic control devices;
d. drainage controls;
e. points of contact between vehicles and the public, and safety controls at these points of contact; and
f. maintenance requirements, including roadway hardness and smoothness and dust control.

21.I.11 Roadway hardness, smoothness, and dust control shall be used to maintain the safety of the roadway.

DEFINITIONS

Body belt: a strap with means for securing about the waist and for attachment to a lanyard, lifeline, or deceleration device.

Body harness: a design of straps which is secured about the body in a manner to distribute the arresting forces over at least the thighs, waist, chest, shoulders, and pelvis, with provision for attaching a lanyard, lifeline, or deceleration device.

Deceleration device: a mechanism which serves to dissipate energy during a fall.

Double-cleated ladder: a ladder, similar to a single cleat ladder but with a center rail, which allows simultaneous two-way traffic for employees ascending or descending.

Extension trestle ladder: a ladder consisting of a trestle ladder with an additional vertical single ladder, having parallel sides, which is adjustable perpendicularly and is provided with a device to lock it into place.

Fixed ladder: a ladder that cannot be readily moved or carried because it is an integral part of a building or structure.

Hardware: buckles, D-rings, snap-hooks, and associated devices used to attach the components of a personal fall protection system.

Individual-rung/step ladder: a ladder without a side rail or center rail support, made by mounting individual steps or rungs directly to the side or wall of the structure.

Job-made ladder: a ladder fabricated by employees, typically at the construction site, and is not commercially manufactured.

Lanyard: a flexible line used to secure a body belt or body harness to a lifeline or directly to a point of anchorage.

Lifeline: a line provided for direct or indirect attachment to a worker's body belt, body harness, lanyard, or deceleration device: may be horizontal or vertical in application.

Live boom: a boom in which lowering is controlled by a brake without aid from other lowering retarding devices.

Nominal dimension: the dimension of material before it is surfaced and finished.

Nonguided personnel hoist system: a hoist system used to transport personnel in a device which is not attached to fixed tracks or guide ropes (a boatswain's chair is an example of a non-guided personnel hoist).

Personal fall arrest system: an engineered system used to arrest an employee in a fall; consists of an anchorage, connectors, body harness, and may include a lanyard, deceleration device, lifeline, or suitable combination of these.

Personal fall protection system: an engineered system which protects employees from falls.

Positioning device: a body belt or body harness system rigged to allow an employee to be supported on an elevated vertical surface, such as a wall, and work with both hands free while leaning.

Portable ladder: a ladder that can be readily moved or carried.

Planking: a wood board or fabricated component which is used as a flooring member.

Rails: the side structural members of a ladder to which rungs, cleats, or steps are attached.

Rope grab: a device which attaches to a lifeline as an anchoring point that provides a means of arresting a fall.

Rope-guided personnel hoist system: a hoist system, used to transport personnel in a cage, which is guided by wire ropes as differentiated from a hoist system using anchored rail arrangements.

Rotation-resistant rope: a wire rope - consisting of an inner layer of strand laid in one direction covered by a layer of strand laid in the opposite direction - which has the effect of counteracting torque and reducing the tendency of the finished rope to rotate.

Runway: a personnel passageway elevated above the surrounding floor or ground level, such as a footwalk along shafting or a walkway between scaffolds.

Side-step fixed ladder: a fixed ladder which requires a person getting off at the top to step to the side of the ladder side rails to reach the landing.

Single-cleat ladder: a ladder consisting of a pair of side rails connected together by cleats, rungs, or steps.

Single-rail ladder: a portable ladder with rungs, cleats, or steps mounted on a single rail instead of the typical two rails.

Step stool: a self-supporting, foldable, portable ladder, non-adjustable in length, 80 cm (32 in) or less in height, with flat steps and without a pail shelf, designed to be climbed on the ladder top cap as well as all steps.

Through-step fixed ladder: a fixed ladder which requires a person getting off at the top to step between the side rails of the ladder to reach the landing.

Track-guided personnel hoist system: a hoist system used to transport personnel in a car which is attached to fixed tracks or guide members.

Trestle ladder: a self-supporting ladder consisting of two single ladders hinged or joined at the top to form equal angles with the base.

Trolley line: a horizontal line for direct attachment to a worker's body belt, lanyard, or deceleration device.

SECTION 22

WORK PLATFORMS

22.A GENERAL

22.A.01 Manufactured work platforms shall be erected, used, inspected, tested, maintained, and repaired in accordance with the manufacturers' recommendations as outlined in the operating manual or in accordance with guidance from the Scaffolding, Shoring, and Forming Institute. A copy of the manufacturer's recommendations (operating manual) or guidance from the Scaffolding, Shoring, and Forming Institute shall be available at the work site.

22.A.02 Work platforms shall comply with appropriate access and fall protection requirements of Section 21.

a. All requirements of Section 21.A shall be applied to work platforms and means of access.

b. Standard railing and handrails for work platforms shall be in compliance with the requirements of Section 21 and personal fall protection devices and safety nets shall be in compliance with the requirements of Section 21.C.

c. Ladders used as work platforms shall be in compliance with the requirements of Section 21.D.

22.A.03 Prior to commencing any activity which requires work in elevated areas, all provisions for access and fall protection shall be delineated in the hazard analysis, accepted by the designated authority, for the activity.

22.A.04 The following hierarchy and prohibitions shall be followed in selecting appropriate work platforms.

a. Scaffolds, platforms, or temporary floors shall be provided

for all work except that which can be done safely from the ground or similar footing.

b. Ladders may be used as work platforms only when use of small hand tools or handling of light material is involved.

c. Ladder jacks, lean-to and prop-scaffolds are prohibited.

d. Emergency descent devices shall not be used as working platforms.

22.A.05 Erection, moving, dismantling, or altering of work platforms shall be under the supervision of a person responsible for job safety.

22.A.06 Work platforms shall not be erected or used in the immediate vicinity of power lines or electrical conductors until such are insulated, deenergized, or otherwise rendered safe against accidental contact. ***> See Section 11.E***

22.A.07 The use of work platforms for the support of an outrigger boom, hoist, well pulley, or any other device or equipment used for hoisting materials will be permitted provided the platform supports, and the individual member to which each device is attached, are reinforced and braced to withstand the additional loads imposed.

22.A.08 Where persons are required to work or pass under a working platform, a screen - consisting of No. 18 gauge US Standard wire 12.5 mm (0.5 in) mesh or the equivalent - shall be provided between the toeboard and the guardrail and extending over the entire opening.

22.B SCAFFOLDS - GENERAL

22.B.01 Capacities.

a. Scaffolds and their components shall be capable of

supporting without failure at least 4 times the maximum anticipated load.

b. Scaffold system components which are subjected to a bending moment (such as outrigger beams with suspended scaffold and counterweights) shall be capable of providing a resisting moment of at least four times the tipping moment.

22.B.02 Design.

a. The dimensions of the members and materials used in the construction of various working platforms or scaffolds shall conform to the sizes shown in the tables and appendices in this manual.

b. Factory-fabricated scaffolds and components shall be designed and fabricated in accordance with the applicable ANSI standard. When there is a conflict between the ANSI standard and this manual concerning the design or fabrication of factory-fabricated scaffolds, the ANSI standard shall prevail.

22.B.03 Scaffolds shall be plumb and level.

22.B.04 Scaffolds (other than suspended scaffolds) shall bear on base plates upon sills or other adequate foundation.

22.B.05 Working levels of work platforms shall be fully planked or decked.

22.B.06 Planking.

a. All planking of platforms shall be either overlapped (minimum 30 cm (12 in)) or secured from movement.

b. Scaffold planks shall extend over their end supports not less than 15 cm (6 in) (unless the planking is manufactured with

restraining hooks or equivalent means) nor more than 30 cm (12 in).

c. Planking on scaffolds shall extend from the toeboard to not more than 35 cm (14 in) from the face of the building or structure unless standard guardrails are installed or personal fall protection systems are used; the maximum distance for outrigger scaffolds shall be 7.5 cm (3 in).

d. Planking shall be supported or braced to prevent excessive spring or deflection and secured and supported to prevent loosening, tipping, or displacement.

e. When a scaffold materially changes its direction, the platform planks shall be laid to prevent tipping.

(1) the planks that meet the corner bearer at an angle shall be laid first, and extend over the diagonally placed bearer far enough to have a good safe bearing but not far enough to involve any danger from tipping, and
(2) the planking running in the opposite direction at an angle shall be laid so as to extend over and rest on the first layer of planking.

22.B.07 Work platforms shall be securely fastened to the scaffold.

22.B.08 Access.

a. An access ladder or equivalent safe access shall be provided.

b. Where a built-in ladder is part of a scaffold system, it shall conform to the requirements for ladders.

c. Climbing of braces shall be prohibited.

22.B.09 When the scaffold height exceeds four times the

minimum scaffold base dimension (and including the width added by outriggers, if used), the scaffold shall be secured to the wall or structure.

a. the first vertical and horizontal tie shall be placed at this point;
b. vertical ties shall be repeated at intervals not greater than 8 m (26 ft) with the top tie placed no lower than four times the base dimension from the top of the scaffold;
c. horizontal ties shall be placed at each end and at intervals not greater than 9 m (30 ft).

22.B.10 The use of brackets on scaffolds shall be prohibited unless the tipping effect is controlled

22.B.11 Use of the following types of scaffolding are permitted if they are designed and constructed in accordance with ANSI A10.8, *Scaffolds*:

a. outrigger scaffolds,
b. needle beam scaffolds,
c. interior hung scaffolds,
d. bricklayer's square scaffolds,
e. float/ship scaffolds,
f. boatswain's scaffolds,
g. window jack scaffolds, and
h. carpenter's bracket scaffolds.

22.C METAL SCAFFOLDS AND TOWERS

22.C.01 Scaffold components made of dissimilar metals shall not be used together unless a competent person has determined that galvanic action will not reduce the strength of any component to a level below that required by 22.B.01.

22.C.02 The sections of metal scaffolds shall be securely connected and all braces shall be securely fastened.

22.C.03 A ladder or stairway shall be provided for access and shall be affixed or built into all metal scaffolds and so located that when in use it will not have a tendency to tip the scaffold.

22.C.04 Tube and coupler scaffolds.

a. Tube and coupler scaffolds shall have posts, runners, and bracing of nominal 5 cm (2 in) (outside diameter) steel tubing or pipe: other structural metals, when used, must be designed to carry an equivalent load. The size of bearers (outside diameter) and the spacing of posts shall be as specified below:

Duty	Bearers	Posts
Light	5 cm	1.2 m x 3 m
Medium	5 cm	1 m x 2.4 m
Medium	6.3 cm	1.8 m x 2.4 m
Heavy	6.3 cm	1.8 m x 1.8 m

b. Tube and coupler scaffolds shall be limited in heights and working levels to those permitted in Table 22-1. Drawings and specifications for tube and coupler scaffolds which exceed the limitations in Table 22-1 shall be designed by a registered engineer.

c. All tube and coupler scaffolds shall be constructed to support four times the maximum intended loads, as set forth in Table 22-1, or as specified by a professional engineer.

d. Runners shall be erected along the length of the scaffold and shall be located on both the inside and the outside posts at even heights.

(1) When tube and coupler guardrails and midrails are used on outside posts, they may be used in lieu of outside runners: if guardrail systems are removed to other levels, extra runners shall be installed to compensate.

(2) Runners shall be interlocked to form continuous lengths and coupled to each post.

(3) The bottom runners shall be located as close to the base as possible.

(4) Runners shall be placed not more than 2 m (6 ft - 6 in) on center.

e. Bearers.

(1) Bearers shall be installed transversely between posts.

(2) When coupled to the post, the inboard coupler shall bear directly on the runner coupler: when coupled to the runners, the couplers shall be kept as close to the post as possible.

(3) Bearers shall extend beyond the posts and runners and shall provide full contact with the coupler.

f. Bracing across the width of the scaffold shall be installed at the ends of the scaffold at least every fourth level vertically and repeated every third set of posts horizontally.

(1) Such bracing shall extend diagonally from the outer post or runner at this level upward to the inner post or runner at the next level.

(2) Building ties shall be installed adjacent to bracing.

g. Longitudinal diagonal bracing across the inner and outer rows of poles shall be installed at approximately a 45° angle in both directions from the base of the end post upward to the extreme top of the scaffold.

(1) Where the longitudinal length of the scaffold permits, such bracing shall be repeated beginning at every fifth post.

(2) On scaffolds where the length is shorter than the height the longitudinal bracing shall extend diagonally from the base of the end posts upward to the opposite end posts and then in alternating directions until reaching the top of the scaffold.

(3) Where conditions preclude the attachment of bracing to the posts, it may be attached to the runners.

22.C.05 Metal frame scaffolds.

a. Spacing of tubular welded panels or frames shall be consistent with the loads imposed.

b. Scaffolds shall be properly braced by cross, horizontal, or diagonal braces (or combination of these) to secure vertical members together laterally, and the cross braces shall be of such length as will automatically square and align vertical members so that the erected scaffold is always plumb, square, and rigid. All brace connections shall be made secure.

c. Scaffold legs shall be set on adjustable bases or plain bases placed on mud sills or other foundations adequate to support the maximum rated loads.

d. Frames shall be placed one on top of the other with coupling or stacking pins to provide vertical alignment of the legs.

e. Where uplift may occur, panels shall be locked together vertically by pins or other equivalent suitable means.

f. Drawings and specifications for all frame scaffolds over 38 m (125 ft) in height above the base plates shall be designed by a registered engineer.

22.C.06 Manually propelled mobile scaffolds.

a. All wheels and casters on rolling scaffolds shall have a positive locking device, securely fastened to the scaffold, to

prevent accidental movement.

b. Casters or wheel shall be locked when scaffold is in use.

c. The force necessary to move the mobile scaffold shall be applied as close to the base as practical and provision shall be made to stabilize the tower during movement from one location to another.

d. Rolling scaffolds shall be used only on firm, level, clean surfaces.

e. Free-standing mobile scaffold working platform heights shall not exceed three times the smallest base dimension.

f. No person shall be allowed to ride on manually propelled scaffolds unless all of the following conditions exist:

(1) the ground surface is within 3° of level and free from pits, holes, or obstructions;
(2) the minimum dimension of the scaffold base (when ready for rolling) is at least one-half of the height and outriggers, if used, are installed on both sides of staging;
(3) the wheels are equipped with rubber or similar resilient tires; and
(4) all tools and materials are secured or removed from the platform before the scaffold is moved.

22.D SCAFFOLDS - WOOD POLE

22.D.01 All wood scaffolds 18 m (60 ft) or less in height shall be constructed in accordance with Table 22-2: wood scaffolds over 18 m (60 ft) high shall be designed by a licensed professional engineer and constructed in accordance with such design.

22.D.02 Bracing.

a. Diagonal bracing shall be provided to prevent the poles from

moving in a direction parallel with the wall of the building or from buckling.

b. Full diagonal bracing shall be erected across the entire face of pole scaffolds in both directions; braces shall be spliced at the poles. The inner row of poles on medium and heavy duty scaffolds shall be braced in a similar manner.

c. Cross bracing shall be provided between inner and outer sets of poles in independent pole scaffolds.

d. The free ends of pole scaffolds shall be cross braced.

22.D.03 Splices.

a. Where wood poles are spliced, the ends shall be squared and the upper section shall rest squarely on the lower section.

b. Splice plates shall be provided on two adjacent sides and shall be not less than 1.2 m (4 ft) in length, overlapping the abutted ends equally, and have the same width and not less then the cross sectional area of the pole: the splice shall be capable of developing strength in any direction equal to the spliced members.

22.D.04 Ledgers and bearers.

a. Ledgers and bearers shall be installed on edge.

b. Ledgers and bearers shall not be spliced between poles.

c. Ledgers shall be long enough to extend over a minimum of two poles and shall be reinforced by bearing blocks nailed to the side of the pole to form a support for the ledger.

d. Bearers shall be long enough to project at least 7.5 cm (3 in) over the ledgers of the inner and outer rows of poles for support.

e. Every wooden bearer on single pole scaffolds shall be reinforced with a 5 mm x 5 cm (3/16 in x 2 in) steel strip, or equivalent, secured to its lower edge throughout the length.

22.D.05 Independent pole scaffolds shall be set as near to the wall of the building as practical.

22.D.06 All pole scaffolds shall be securely guyed or tied to the structure. Where the height or length exceeds 7.5 m (25 ft), the scaffold shall be secured at intervals not greater than 7.5 m (25 ft) vertically and horizontally.

22.E SCAFFOLDS - SUSPENDED

22.E.01 Suspended scaffolds shall be designed, constructed, operated, inspected, tested, and maintained as specified in the operating manual for the device.

22.E.02 Inspections.

a. Suspended scaffold systems shall be inspected prior to being placed in service to determine that the system conforms to this manual and the manufacturer's specifications.

b. Every suspended scaffold shall be tested with twice the maximum anticipated load before being put into operation.
> See 22.B.01

c. Each hoist shall be inspected before, and trial operated after, every installation and re-rigging in accordance with the manufacturer's specifications.

d. Connection and anchorage systems of suspended scaffold shall be inspected at the beginning of each shift.

e. All wire ropes, fiber and synthetic ropes, slings, hangers, hoists, rigging, fall protection equipment, platforms, anchorage points and their connections, and other supporting parts shall be

inspected before every installation, daily thereafter, and periodic while the scaffold is in use.

f. Governors and secondary brakes for powered hoists shall be inspected and tested per the manufacturer's recommendations: at the minimum, inspections shall be made annually.

(1) Inspections and tests shall include a verification that the initiating device for the secondary braking operates as intended.

(2) A copy of the latest inspection and test report shall be maintained on the job site.

g. Records of inspections conducted while the unit is at the work site shall be maintained at the work site.

22.E.03 Only personnel trained in the use of the elevating work platform shall be authorized to operate it. Training shall include:

a. reading and understanding the manufacturer's operating manual and any associated rules and instructions, or training by a qualified person on the contents on these documents, and
b. reading and understanding all decals, warnings, and instructions on the device.

22.E.04 All parts of all suspended scaffolds shall have a minimum safety factor of 4: a minimum safety factor of 6 is required for support ropes.

22.E.05 Support ropes.

a. Support ropes shall be attached at the vertical centerline of the outrigger and the attachment shall be directly over the hoist machine.

b. Support ropes shall be vertical for their entire length; the scaffold shall not be swayed nor the support ropes fixed to any intermediate points to change the original path of travel.

c. Support ropes shall have the fixed end equipped with a proper size thimble and secured by eyesplicing or equivalent means: free ends shall be brazed or secured to prevent fraying.

d. The wire rope for traction hoists shall be of such length that the operator may descend to the lowest point of travel without the end of the wire rope entering the hoist: where the wire rope is inadequate for the lowest descent, provision shall be made to prevent the hoist from running off the wire rope.

e. On winding drum type hoists, running ends of suspension ropes shall be attached by positive means to the hoisting drum and at least four wraps of the rope shall remain on the drum at all times.

f. Support ropes shall be capable of resisting chemicals or conditions to which they are exposed.

g. No welding, burning, riveting, or open flame work shall be performed on any platform suspended by fiber or synthetic rope.

h. Defective or damaged rope shall not be used as life lines or suspension lines: the repairing of wire rope is prohibited.

22.E.06 All suspension scaffold support devices such as outrigger beams, cornice hooks, parapet clamps, or similar devices shall:

a. be made of mild steel, wrought iron, or equivalent materials;
b. be supported by bearing blocks;
c. rest on surfaces capable of supporting the reaction forces imposed by the scaffold hoist operating at its maximum rated load; and
d. be secured against movement by tiebacks installed at right angles to the face of the building whenever possible and secured to a structurally sound portion of the building: tiebacks shall be equivalent in strength to the hoisting rope.

22.E.07 Outrigger beams.

a. Outrigger beams shall be made of structural metal and shall be restrained to prevent movement.

b. The inboard ends of outrigger beams shall be stabilized by bolts or other direct connections to the floor or roof deck, or they shall have their inboard ends stabilized by counterweights, except mason's multiple point adjustable suspension scaffold outrigger beams shall not be stabilized by counterweights.

c. Before use, direct connections shall be evaluated by a competent person who shall affirm that the supporting surfaces are capable of supporting the loads to be imposed. Mason's multiple point adjustable suspension scaffold connections shall be designed by a licensed engineer experienced in scaffold design.

d. Counterweights shall be made of non-flowable solid material, shall be secured to the outrigger beams by mechanical means, and shall not be removed until the scaffold is disassembled.

e. Outrigger beams shall be secured by tiebacks equivalent in strength to the suspension ropes: tiebacks shall be secured to a structurally sound portion of the building or structure and shall be installed parallel to the centerline of the beam.

f. Outrigger beams shall be provided with stop bolts or shackles at both ends.

g. When channel iron beams are used in place of I-beams, the channels shall be securely fastened together with the flanges turned outward.

h. Outrigger beams shall be installed with all bearing supports perpendicular to the beam centerline.

I. Outrigger beams shall be set and maintained with the web in a vertical position.

j. Where a single outrigger beam is used, the steel shackle or clevises with which the wire ropes are attached to the beam shall be placed directly over the hoisting machines.

22.E.08 Hoisting machines.

a. Hoisting machines shall be of a type tested and listed by a nationally-recognized testing laboratory.

b. Each hoist shall contain a name plate(s) stating:

(1) manufacturer's name,
(2) maximum load rating,
(3) identification number, and
(4) wire rope specifications.

c. Powered hoists shall be electric-, air-, hydraulic-, or propane-powered: gasoline-powered hoists are prohibited.

d. All powered hoists shall be equipped with speed reducers and shall be provided with a primary brake and a secondary brake.

(1) the primary brake shall automatically engage whenever power is interrupted or whenever the operator ceases to apply effort;
(2) the secondary brake shall stop and hold the hoist under overspeed or abnormal conditions: every secondary brake shall be periodically tested under simulated conditions in accordance with the manufacturer's recommendations.

e. Each powered hoist shall have its own separate control.

(1) if the control is of the push-button type, it shall be constant pressure;

(2) if the control is of the fixed-position type, it shall have provision for automatic locking when in the off position, or shall be guarded against accidental actuation;
(3) if the control is of the level type, it may be of the constant pressure type or of the fixed-position type.

f. Manual operation of powered hoists may be provided if the hoist is designed so that not more than one person per hoist is required to perform this operation.

(1) During manual operation, a means shall be provided to make the prime mover inoperative.

(2) Instruction shall be provided advising personnel to disconnect the power source before using a manual crank.

g. Manually-operated hoists.

(1) Manual operation shall provide a means to prevent rapid handle movement or fast unspooling; mechanisms used to allow fast unspooling during the erection process shall not be in place on the scaffold.

(2) In the event a controlled descent device is used, it shall not bypass the secondary brake.

(3) All winding drum hoists shall be provided with a driving pawl and a locking pawl that automatically engages when the driving pawl is released.

(4) Gripping-type hoists shall be designed so that the hoist is engaged on the suspension rope at all times, including all travel actuations of the operating lever.

(5) Each winding drum hoist shall be provided with a positive means of attachment of the suspension hoist: the drum attachment shall develop a minimum of four times the rated capacity of the hoist.

(6) Each hoist shall require a positive crank force to descend.

22.E.09 Platforms.

a. Light metal platforms, when used, shall be of a type tested and listed by a nationally recognized testing laboratory.

b. Ladder-type platforms.

(1) Ladder-type platforms shall be constructed in accordance with Table 22-3.

(2) The side stringer for ladder-type platforms shall be of clear straight-grained spruce or materials of equivalent strength and durability.

(3) The rungs shall be of straight-grained oak, ash, or hickory, at least 3 cm (1-1/8 in) in diameter, with 22 mm (7/8 in) tenons mortised into the side stringers at least 22 mm (7/8 in).

(4) The stringers shall be tied with tie rods not less than 6 mm (1/4 in) diameter passing through the stringers and riveted up tight against washers on both ends.

(5) The flooring strips shall be spaced not more than 16 mm (5/8 in) apart except at the side rails where the space may be 2.5 cm (1 in).

c. Plank platforms.

(1) Plank platforms shall be composed of not less than nominal 5 cm x 25 cm (2 in x 10 in) unspliced planks, cleated together on the underside, starting 6 inches from each end at intervals not to exceed 1.2 m (4 ft).

(2) The plank platform shall not extend beyond the hangers more than 30 cm (12 in): a bar or other effective means shall be securely fastened to the platform at each end to prevent its

slipping off the hanger.

(3) The span between hangers for plank platforms shall not exceed 2.4 m (8 ft).

d. Beam platforms.

(1) Beam platforms shall have side stringers of lumber not less than 5 cm x 15 cm (2 in x 6 in), set on edge.

(2) The span between hangers shall not exceed 3.6 m (12 ft) when beam platforms are used.

(3) The flooring shall be of 2.5 cm x 15 cm (1 in x 6 in) material properly nailed; floor boards shall not be spaced more than 12.5 mm (½ in) apart.

(4) The flooring shall be supported on 5 cm x 15 cm (2 in x 6 in) cross beams, laid flat and set into the upper edge of the stringers with a snug fit, at intervals of not more than 1.2 m (4 ft), nailed securely in place.

22.E.10 Suspended scaffolds shall be guyed, braced, guided, or equipped with tag line to prevent swaying.

22.E.11 Two-point suspension scaffolds.

a. Two-point suspension scaffold platforms shall be not less than 50 cm (20 in) nor more than 90 cm (36 in) wide. The platform shall be securely fastened to the hangers by U-bolts or by other equivalent means.

b. The hangers of two-point suspension scaffolds shall be made of mild steel, or equivalent materials, having a cross sectional area capable of sustaining four times the maximum rated load and shall be designed with a support for a standard railing.

c. Two-point suspension scaffolds shall be securely lashed to the structure: window cleaner's anchors shall not be used.

d. The platform on every two-point suspension scaffolds shall be of the light metal-, ladder-, plank-, or beam-type.

e. Two-point suspension scaffolds shall not be joined by bridging.

f. Two-point suspension scaffold platforms, when in use, shall be level within 2.5 cm (1 in) for every 0.3 m (1 ft) of platform length.

22.E.12 Mason's multiple-point adjustable suspension scaffolds.

a. W hen employees on the scaffold are exposed to overhead hazards, overhead protection equivalent in strength to 5 cm (2 in) planking shall be provided on the scaffold not more than 2.7 m (9 ft) above the platform, laid tight and extending the entire width of the scaffold.

b. The scaffold shall be capable of sustaining a load of 2400 Pa (50 psf) and shall not be overloaded.

c. The platform shall be suspended by wire ropes from overhead outrigger beams.

22.E.13 Stonesetters' multiple-point adjustable suspension scaffolds.

a. Stonesetters' multiple-point adjustable suspension scaffolds shall be capable of sustaining a load of 1200 Pa (25 psf) and shall not be overloaded.

b. Stonesetters' multiple-point adjustable suspension scaffolds shall not be used for storage of stone or other heavy materials.

c. The scaffold platform shall be securely fastened to the

hangers by U-bolts or other equivalent means.

d. Stonesetters' multiple-point adjustable suspension scaffolds shall be suspended from metal outriggers, iron brackets, wire rope slings, or iron hooks.

e. When two or more stonesetters' multiple-point adjustable suspension scaffolds are used on a structure, they shall not be bridged one to the other, but shall be maintained at even height with platforms abutting closely.

22.E.14 Working capacities.

a. On suspension scaffolds designed for a working load of 225 kg (500 lb), no more than two employees shall be permitted to work at one time.

b. On suspension scaffolds with a working load of 340 kg (750 lb), no more than three people shall be permitted to work at one time.

22.E.15 Fall protection.

a. Each person supported by a suspended scaffold shall be protected by a Type I body belt or body harness system. ***> See 21.C.01***

b. Body belts and body harnesses shall be attached by lanyard to a lifeline, trolley line, or scaffold structural member: however, when overhead obstructions or additional platform levels are part of a single point or two-point adjustable suspension scaffold, then lifelines shall not be used.

(1) lifelines, when used, shall be fastened to a fixed safe point of anchorage, shall be independent of the scaffold, and shall be protected from sharp edges and abrasion;
(2) trolley lines, when used, shall be secured to two or more structural members of the scaffold and shall not be attached to

the suspension ropes;
(3) when lanyards are connected to trolley lines or structural members on a single-point or two-point adjustable suspension scaffold, the scaffold shall be equipped with additional independent support lines and automatic locking devices capable of stopping the fall of the scaffold in the event one or both of the suspension ropes fail. The independent support lines shall be equal in number and strength to the suspension ropes; and
(4) lifelines, independent support lines, and suspension ropes shall not be attached to one another and shall not be attached to or use the same point of anchorage.

c. To keep the lifeline continuously attached, with a minimum of slack, to a fixed structure, the attachment point of the lifeline shall be changed as the work progresses.

22.F CRANE SUPPORTED WORK PLATFORMS

22.F.01 The work platform and suspension system shall be designed by a registered engineer or a qualified person competent in structural design.

a. The work platform (excluding fall protection systems) shall be capable of supporting, without failure, its own weight and at least five times the maximum intended load.

b. The suspension system shall be designed to minimize tipping of the platform due to movement of the employees on the work platform.

22.F.02 Crane supported work platforms shall meet the following requirements:

a. The scaffold shall be of metal or metal frame construction with a standard railing.

b. A grab rail shall be installed inside the entire perimeter of the personnel platform.

c. Access gates, if installed, shall not swing outward during hoisting and shall be equipped with a restraining device to prevent accidentally opening.

d. Headroom shall be provided which will allow employees to stand upright in the platform.

e. All welding of the work platform and its components shall be performed by a qualified welder familiar with the weld grades, types, and material specified in the platform design.

f. The platform shall be conspicuously posted with a plate or other permanent marking which indicates the weight of the platform and its rated load capacity or maximum intended load.

22.F.03 Rigging.

a. When a wire rope bridle is used to connect the work platform to the load line, each bridle leg shall be connected to a master link or shackle in such a manner to ensure that the load is evenly distributed among the bridle legs.

b. The hook connection to the platform rigging shall be of a type that can be closed and locked to eliminate the hook throat opening: alternately, an alloy anchor type shackle with a bolt, nut, and retaining pin may be used.

c. Wire rope and rigging hardware shall be capable of supporting, without failure, at least five times the maximum intended load; where rotation-resistant rope is used the slings shall be capable of supporting without failure at least ten times the maximum intended load.

d. All eyes in wire rope slings shall be fabricated with thimbles.

e. Bridles and associated rigging for attaching the platform to the hoist line shall be used only for the platform and the employees and their tools and materials necessary for the work

and shall not be used for any other purpose when not hoisting personnel.

22.F.04 Work platform use.

a. Only cranes with power-operated up and down boom hoists and load lines shall be used to support work platforms; platforms shall be lowered only under power and not by the brake.

b. A thorough inspection by a qualified person shall be made of all hoisting parts prior to each use.

c. A competent supervisor shall observe the operations while personnel are working from crane supported work platforms.

d. The number of employees occupying the work platform shall not exceed the number required for the work being performed.

e. Work platforms shall be used only for employees and their tools and materials necessary for the work; work platforms shall not be used as material hoists when not hoisting personnel.

f. Materials and tools for use during a personnel lift shall be secured to prevent displacement and shall be evenly distributed within the platform while it is suspended.

22.F.05 See also applicable requirements in Sections 16 and 21.G.

22.G FORM AND CARPENTER'S BRACKET SCAFFOLDS

22.G.01 At the minimum, form scaffolds shall be designed in accordance with Table 22-4.

22.G.02 Each bracket, except for wooden bracket form scaffolds,

shall be attached to the supporting formwork or structure by means of one or more of the following:

a. nails,
b. a metal stud attachment device,
c. welding,
d. hooking over a secured structural supporting member, provided the form walers are bolted to the form or secured by snap ties or tie-bolts extending through the form and securely anchored, or
e. for carpenter's bracket scaffolds only, by a bolt extending through to the opposite side of the structure's wall.

22.G.03 Wooden form scaffolds shall be an integral part of the form panel.

22.G.04 Folding-type metal brackets, when extended for use, shall be either bolted or secured with a locking-type pin.

22.G.05 Brackets shall consist of a triangular shaped frame made of wood with a cross-section not less than 5 cm x 7.5 cm (2 in x 3 in) or of 31 mm x 31 mm x 3 mm (1-1/4 in x 1-1/4 in x 1/8 in) structural angle iron.

22.G.06 Bolts used to attach brackets to structures shall not be less than 15 mm (5/8 in) in diameter.

22.G.07 Maximum bracket spacing shall be 2.4 m (8 ft) on centers.

22.G.08 Figure-four form scaffolds shall have bearers consisting of two pieces of 2.5 cm x 15 cm (1 in x 6 in) lumber nailed on opposite sides of the vertical support; bearers shall project not more than 1 m (3.5 ft) from the outside of the form support and shall be braced and secured to prevent tipping or turning.

22.G.09 The knee or angle brace for figure four form scaffolds shall intersect the bearer at least 0.9 m (3 ft) from the form at an

angle of 45° and the lower end shall be nailed to a vertical support.

22.H HORSE SCAFFOLDS

22.H.01 Horse scaffolds shall not be constructed or arranged more than two tiers or 3 m (10 ft) in height: scaffolds shall be 5° feet or less in height and 1.5 m (5 ft) or more in width.

22.H.02 The members of horse scaffolds shall not be less than those specified below:

Members	Dimensions
Horizontal members or bearers	7.5 cm x 10 cm
Legs	5 cm x 10 cm
Longitudinal brace between legs	2.5 cm x 15 cm
Gusset brace at top of legs	2.5 cm x 20 cm
Half diagonal braces	5 cm x 10 cm

22.H.03 Horse scaffolds shall be spaced not more than 1.5 m (5 ft) for medium duty and not more than 2.4 m (8 ft) for light duty.

22.H.04 When arranged in tiers, each horse scaffold shall be placed directly over the horse scaffold in the tier below: the legs shall be nailed or otherwise secured to the planks to prevent displacement or thrust and each tier shall be cross braced.

22.I PUMP JACK SCAFFOLDS

22.I.01 Pump jack scaffolds shall not carry a working load exceeding 230 kg (500 lb); the components shall not be loaded in excess of the manufacturer's recommended limits.

22.I.02 Pump jack brackets, braces, and accessories shall be fabricated from metal plates and angles.

22.I.03 Poles.

a. Pole lumber shall be two 5 cm x 10 cm (2 in x 4 in) stock, of Douglas fir, or equivalent, straight-grained, clear, free of cross-grain, shakes, large loose or dead knots, and other defects which might impair strength.

b. Poles shall not exceed 9 m (30 ft) in height.

c. When poles are constructed of two continuous lengths they shall be of 5 cm x 10 cm (2 in x 4 in) stock, spiked together with the seam parallel to the bracket, and with 10d nails, no more than 36 mm (12 in) center-to-center, staggered uniformly from opposite outside edges.

d. If 5 cm x 10 cm (2 in x 4 in) stock are spliced to make up the pole, the splices shall be so constructed as to develop the full strength of the member.

e. Poles shall be secured to the wall by triangular bracing, or equivalent, at the bottom, top, and other points to provide a maximum vertical spacing of not more than 3 m (10 ft) between braces: each brace shall be capable of supporting a minimum of 100 kg (225 lb) tension or compression.

f. When wood scaffold planks are used as platforms, poles used for pump jacks shall not be spaced more than 3 m (10 ft) on center; when fabricated platforms are used that comply with all other provisions of this section, pole spacing may exceed 3 m (10 ft) on center if permitted by the manufacturer.

22.I.04 Brackets.

a. Each pump jack bracket shall have two positive gripping mechanisms to prevent any failure or slippage.

b. Platform brackets shall be fully decked and the planking secured.

c. For the pump jack bracket to pass bracing already installed, an extra brace shall be used approximately 1.2 m (4 ft) above the one to be passed until the original brace is reinstalled.

22.I.05 Not more than two persons shall be permitted at one time upon a pump jack scaffold between any two supports.

22.I.06 When a work bench is used at an approximate height of 1 m (42 in), the top guardrail may be eliminated if the work bench is fully decked, the planking secured, and is capable of withstanding 90 kg (200 lb) pressure in any direction; employees shall not be permitted to use a work bench as a scaffold platform.

22.I.07 A ladder shall provide access to the platform during use.

22.J ELEVATING WORK PLATFORMS

22.J.01 Elevating work platforms shall be designed and constructed in accordance with the appropriate American National Standard Institute standard:

a. ANSI A92.3, *Manually Propelled Elevating Work Platforms*;
b. ANSI A92.6, *Self-propelled Elevating Work Platforms*; or
c. ANSI A92.5, *Boom-supported Elevating Work Platforms*.

22.J.02 Elevating work platforms shall be operated, inspected, and maintained as specified in the operating manual for the equipment.

a. Elevating work platforms shall also comply with requirements of this Section and Section 16.A.

b. Records of inspections conducted while the unit is at the work site shall be maintained at the work site.

22.J.03 All boom-supported elevating work platforms shall be equipped with an alarm, or other suitable warning device, at the platform: the alarm shall be in operable condition and shall

automatically activate when the machine base is more than 5° out of level in any direction.

22.J.04 Only personnel trained in the use of the elevating work platform shall be authorized to operate it. Training shall consist of:

a. reading and understanding the manufacturer's operating manual and any associated rules and instructions, or training by a qualified person on the contents on these documents, and
b. reading and understanding all decals, warnings, and instructions on the elevating work platform.

22.J.05 Before operating the work platform the operator shall:

a. survey the work area for loose or soft ground, ditches, dropoffs or holes, bumps and floor obstructions, debris, overhead obstructions, ground and elevated energy sources, and other possible hazards;
b. ensure the elevating work platform is on a firm, level surface;
c. ensure the work platform is loaded in accordance with the manufacturer's specifications;
d. ensure that outriggers and/or stabilizers are used if required by the manufacturer;
e. ensure that, if the vehicle is on wheels, the wheels are locked or chocked; and
f. ensure that fall protection systems are in place.

22.J.06 Elevating work platforms shall not be used by persons working on energized electrical wiring and/or equipment.

22.J.07 The use of personnel fall protection devices shall be as specified in the manufacturer's operating manual: personal fall protection devices, if used, may only be secured to manufacturer-approved hard points.

22.K VEHICLE-MOUNTED ELEVATING AND ROTATING WORK PLATFORMS

22.K.01 Vehicle-mounted elevating and rotating work platforms shall be designed and constructed in accordance with ANSI standard A92.2, *Vehicle-mounted Elevating and Rotating Aerial Devices*.

22.K.02 Vehicle-mounted elevating and rotating work platforms shall be operated, inspected, tested, and maintained as specified in the operating manual for that piece of equipment.

a. Vehicle-mounted elevating and rotating work platforms shall also comply with requirements of this section and Section 16.A.

b. Records of inspections conducted while the unit is at the work site shall be maintained at the work site.

c. If the unit is considered, rated, and used as an insulating device, copies of the electrical insulating components and system tests conducted while the unit is at the work site shall be maintained at the work site.

22.K.03 Only personnel trained in the use of the vehicle-mounted elevating and rotating work platform shall be authorized to operate it. Training shall consist of:

a. reading and understanding the manufacturer's operating manual and any associated rules and instructions, or training by a qualified person on the contents on these documents, and
b. reading and understanding all decals, warnings, and instructions on the vehicle-mounted elevating and rotating work platform.

22.K.04 Transporting.

a. An aerial lift truck shall not be moved when the boom is

elevated in a working position with personnel in the basket except for equipment which is specifically designed for this type of operation.

b. Before moving an aerial lift, the boom(s) shall be inspected to see that it is properly cradled and outriggers are in stowed positions, except as provided in a, above.

c. Aerial ladders shall be secured in the lower traveling position by the locking device on top of the truck cab and the manually operated device at the base of the ladder before the truck is moved for highway travel.

22.K.05 Operating practices.

a. When outriggers are used they shall be positioned on pads or a solid surface and the brakes shall be set.

b. Wheel chocks shall be in place before using an aerial lift.

22.K.06 Fall protection.

a. Belting off to an adjacent pole structure or equipment while working from an aerial lift shall not be permitted.

b. Employees shall always stand firmly on the floor of the basket and shall not sit or climb on the edge of the basket or use planks, ladders, or other devices for a work position.

c. A body belt shall be worn and a lanyard attached to the boom or basket when working from an aerial lift.

DEFINITIONS

Aerial lift: include the following vehicle-mounted aerial devices used to elevate personnel to job sites above the ground: aerial ladder; extensible boom platform; articulating boom platform; vertical tower; and a combination of these devices.

TABLE 22-1

TUBE AND COUPLER SCAFFOLD HEIGHT AND LEVEL LIMITS

Light duty, 2-inch OD bearer
Uniformly distributed load not to exceed 25 psf
Longitudinal post spacing = 3 m (10 ft)
Traverse post spacing = 1.2 m (4 ft)

Working levels	Additional planked levels	Maximum height
1	16	38 m (125 ft)
2	11	38 m (125 ft)
3	6	38 m (125 ft)
4	1	38 m (125 ft)

Medium duty, 2-1/2 in OD bearer
Uniformly distributed load not to exceed 50 psf
Longitudinal post spacing = 2.4 m (8 ft)
Traverse post spacing = 1.8 m (6 ft)

Working levels	Additional planked levels	Maximum height
1	11	38 m (125 ft)
2	1	38 m (125 ft)

Heavy duty, 2-1/2 in OD bearer
Uniformly distributed load not to exceed 75 psf
Longitudinal post spacing = 1.8 m (6 ft)
Traverse post spacing = 1.8 m (6 ft)

Working levels	Additional planked levels	Maximum height
1	6	38 m (125 ft)

TABLE 22-2

WOOD POLE SCAFFOLD HEIGHT AND LEVEL LIMITS
Minimum nominal size and maximum spacing of members of single pole scaffolds

	Light duty		Medium duty	Heavy duty
Maximum height of scaffold	20 ft	60 ft	60 ft	60 ft
Maximum uniformly distributed load	25 psf	25 psf	50 psf	75 psf
Poles or uprights	2 in x 4 in	4 in x 4 in	4 in x 4 in	4 in x 4 in
Pole spacing, longitudinal	6 ft	10 ft	8 ft	6 ft
Maximum width of scaffold	5 ft	5 ft	5 ft	5 ft
Bearers or putlogs	2 in x 4 in+ 2 in x 6 in (rough) or 3 in x 4 in (rough)++	2 in x 4 in+ 2 in x 6 in (rough) or 3 in x 4 in (rough)++	2 in x 9 in (rough) or 3 in x 4 in (rough)	2 in x 9 in (rough) or 3 in x 5 in (rough)
Spacing of bearers or putlogs			8 ft	6 ft
Ledgers	1 in x 4 in	1-1/4 in x 9 in	2 in x 9 in (rough)	2 in x 9 in (rough)
Vertical spacing of horizontal members	7 ft	7 ft	9 ft	6 ft 6 in
Bracing, horizontal	1 in x 4 in	1 in x 4 in	1 in x 6 in or 1-$^{1}/_{4}$ in x 4 in	2 in x 4 in
Bracing, diagonal	1 in x 4 in	1 in x 4 in	1 in x 4 in	2 in x 4 in
Tie-ins	1 in x 4 in	1 in x 4 in	1 in x 4 in	1 in x 4 in

all members are used on edge
+ to 3 ft width, ++ to 5 ft width,

TABLE 22-2, continued

WOOD POLE SCAFFOLD HEIGHT AND LEVEL LIMITS
Minimum nominal size and maximum spacing of members of independent pole scaffolds

	Light duty		Medium duty	Heavy duty
Maximum height of scaffold	20 ft	60 ft	60 ft	60 ft
Maximum uniformly distributed load	25 psf	25 psf	50 psf	75 psf
Poles or uprights	2 in x 4 in	4 in x 4 in	4 in x 4 in	4 in x 4 in
Pole spacing, longitudinal	6 ft	10 ft	8 ft	6 ft
Maximum width of scaffold	6 ft	10 ft	6 ft	6 ft
Bearers	2 in x 4 in+ 2 in x 6 in (rough) or 3 in x 4 in (rough)++	2 in x 4 in+ 2 in x 6 in (rough) or 3 in x 4 in (rough)++	2 in x 9 in (rough) or 2 in x 10 in (rough)	2 in x 9 in (rough)
Spacing of bearers			8 ft	6 ft
Ledgers	1 in x 4 in	1-1/4 in x 9 in	2 in x 9 in (rough)	2 in x 9 in (rough)
Vertical spacing of horizontal members	7 ft	7 ft	6 ft	4 ft 6 in
Bracing, horizontal	1 in x 4 in	1 in x 4 in	1 in x 6 in or 1-$^{1}/_{4}$ in x 4 in	2 in x 4 in
Bracing, diagonal	1 in x 4 in	1 in x 4 in	1 in x 4 in	2 in x 4 in
Tie-ins	1 in x 4 in	1 in x 4 in	1 in x 4 in	1 in x 4 in

all members are used on edge
+ to 3 ft span, ++ to 10 ft span
* these data are based on one working level and two additional planked levels

TABLE 22-3
LADDER-TYPE PLATFORMS

Component	Length of platform (feet)				
	12	14 & 16	18 & 20	22 & 24	28 & 30
Side stringers, minimum cross sections (finished sizes, inches): at ends	1-3/4 x 2 3/4	1-3/4 x 2 3/4	1-3/4 x 3	1-3/4 x 3	1-3/4 x 3 1/2
at middle	1-3/4 x 3 3/4	1-3/4 x 3 3/4	1-3/4 x 4	1-3/4 x 4 1/4	1-3/4 x 5
Reinforcing strips	[1]	[1]	[1]	[1]	[1]
Rungs	[2]	[2]	[2]	[2]	[2]
Tie rods: number (minimum)	3	4	4	5	6
diameter (minimum)	1/4 in	1/4 in	1/4 in	1/4 in	1/4 in
Flooring, minimum finished sizes (inches)	1/2 x 2	1/2 x 2 3/4	1/2 x 2 3/4	1/2 x 2 3/4	1/2 x 2 3/4

[1] a 1/8 in x 7/8 in steel reinforcing strip or its equivalent shall be attached to the side or underside, full length
[2] rungs shall be 1 1/8 in minimum diameter with at least 1/8 in diameter tenons and the maximum spacing shall be 12 in center to center

TABLE 22-4

FORM SCAFFOLDS

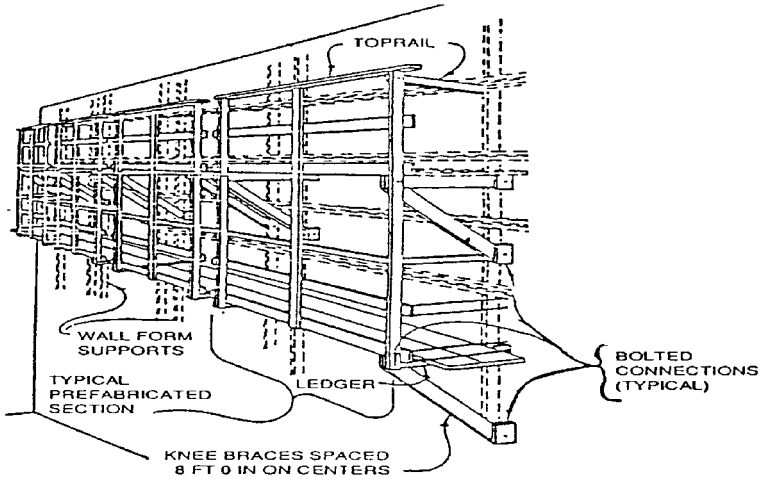

Minimum design criteria for light-duty wooden bracket form scaffolds

Members	Dimensions
Bracket uprights	2 in x 4 in or 2 in x 6 in
Bracket support ledgers	2 in x 6 in
Maximum bracket width	3 ft 6 in
Bracket braces	1 in x 6 in
Guardrail post	2 in x 4 in
Guardrail height	36 in to 42 in
Midrail	1 in x 6 in
Toeboards	1 in x 6 in
Bracket upright spacing	8 ft 0 in (on centers)

TABLE 22-4, continued

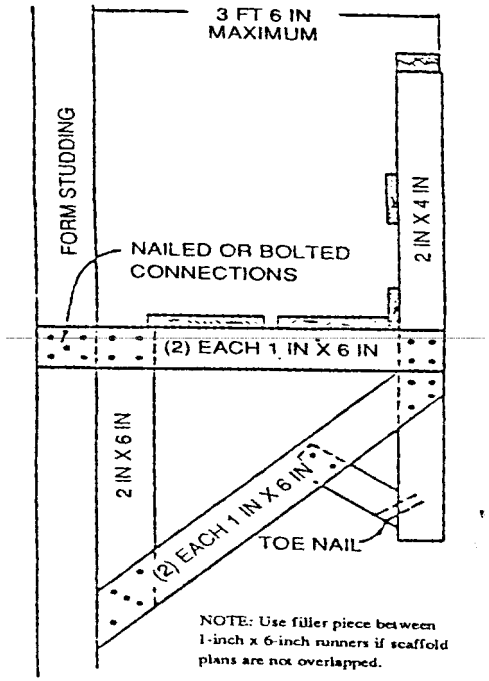

Mimimum design criteria for light-duty figure-four form scaffolds

Members	Dimensions
Bracket uprights	2 in x 4 in or 2 in x 6 in
Bracket outrigger ledgers (two)	1 in x 6 in
Bracket braces (two)	1 in x 6 in
Maximum length of ledgers	3 ft 6 in (unsupported)
Bracket upright spacing	8 ft 0 in (on centers)

TABLE 22-4, continued

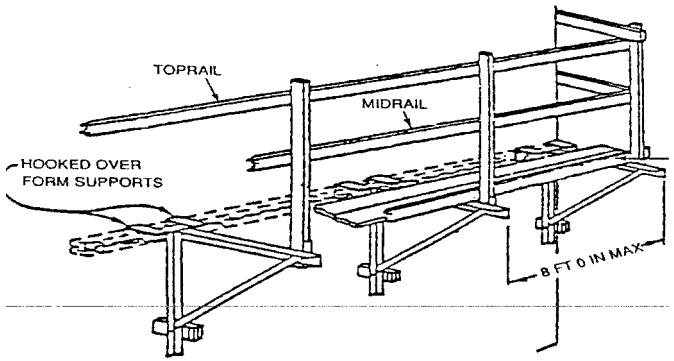

Minimum design criteria for light-duty metal bracket form scaffolds

Members	Dimensions
Guardrail post	2 in x 4 in
Guardrail	2 in x 4 in
Guardrail height	36 in to 45 in
Midrail	1 in x 6 in
Toeboards	1 in x 6 in
Metal bracket spacing (metal bracket or scaffold jack dimensions in accordance with manufacturer's design)	8 ft 0 in

Beam platform: a work platform made up of wood beams (oriented vertically).

Bearer: a horizontal member of a scaffold upon which the platform rests and that may be supported by runners.

Bending moment: the overturning effect at a point which is the product of a force and the distance from the point from which the force is applied.

Boatswain's scaffold: a suspended seat designed to accommodate one worker.

Bricklayers' square scaffold: a scaffold made up of a work platform (planking) supported on bricklayers' squares.

Carpenter's bracket scaffold: a scaffold made up of a work platform supported on wood or metal brackets.

Elevating work platform: a vertically-adjustable, integral chassis, power operated work platforms, which may be horizontally extended or rotated relative to the elevating mechanism; an integral frame boom supported power operated elevating work platforms which either telescope, articulate, rotate, or extend beyond their base dimensions.

Figure-four form scaffold: a scaffold consisting of a work platform supported by brackets designed in the shape of a "4."

Float/ship scaffold: a scaffold hung from overhead supports by means of ropes and consisting of a unit having diagonal bracing underneath: the scaffold rests upon and is securely fastened to two parallel plank bearers at right angles to the span.

Form scaffold: a scaffolding system integrated to formwork.

Free-standing scaffold: a scaffold which is independent of and not rigidly attached to a structure.

Horse scaffold: a scaffold composed of work platforms supported by construction horses.

Inside post: the post nearest to the structure against which the scaffold is erected.

Interior-hung scaffold: a suspended scaffold consisting of a work platform suspended from the ceiling or roof structure by fixed length supports.

Ladder-type platform: a platform which resembles a ladder covered by planking.

Ledger: a horizontal scaffold member upon which bearers rest; the longitudinal member which joins scaffold uprights, posts, poles, and similar members.

Mason's multiple point adjustable suspension scaffold: a scaffold having a continuous platform supported by bearers suspended by wire rope hoists from overhead supports.

Metal frame scaffold: a scaffold consisting of a work platform supported by prefabricated metal frames.

Needle-beam scaffold: a platform resting on two bearers that is suspended by a line.

Outrigger scaffold: a scaffold consisting of a work unit supported by outriggers projecting beyond the wall or face of the building or structure, the inboard ends of which are secured inside of such building or structure.

Outside post: the post away from the structure against which the scaffold is erected.

Plank platform: a work platform made up of wood boards (oriented horizontally).

Pump jack scaffold: a scaffold consisting of a work platform supported by movable support brackets mounted on vertical poles.

Runner: the lengthwise horizontal bracing or bearing member which supports bearers on tube and coupler scaffolds.

Snap-ties: a concrete wall-form tie, the end of which can be twisted or snapped off after the forms have been removed.

Stonesetters' multiple point adjustable suspension scaffold: a swinging type scaffold having a unit supported by members which is suspended at four points.

Swing scaffold: see two-point suspension scaffold.

Tube and coupler scaffold: a scaffold consisting of a work platform supported by individual pieces of tubing (uprights, bearers, runners, bracing) connected with couplers.

Two-point suspension scaffold (swinging scaffold/swinging stage): a suspension scaffold consisting of a platform supported by hangers (stirrups) suspended by two ropes from overhead supports and equipped with means to raise and lower the platform.

Vehicle-mounted elevating and rotating work platforms: an elevating and rotating work platform mounted on the chassis of a commercial vehicle.

Window jack scaffold: a supported scaffold consisting of a platform supported by a bracket or jack which projects through a window opening.

SECTION 23

DEMOLITION

23.A GENERAL

23.A.01 Surveys and planning.

a. Prior to initiating demolition activities the following surveys and plan shall be accomplished: ***> see lead and asbestos requirements in Section 06***

(1) an engineering survey - by a competent person - of the structure to determine the structure layout, the condition of the framing, floors, walls, the possibility of unplanned collapse of any portion of the structure (any adjacent structure where employees or property may be exposed shall be similarly checked), and the existence of other potential or real demolition hazards;
(2) an asbestos survey, in accordance with 29 CFR 1926.1101, and a lead survey in accordance with EPA and State requirements, shall be conducted by qualified persons (meeting the EPA model accreditation plan training requirements for the "Inspector" category as specified in 40 CFR Part 763 for asbestos and 40 CFR for lead) to determine the presence and extent of asbestos containing materials in the structure and its components; and
(3) a demolition plan - by a competent person and based on the engineering and lead and asbestos surveys - for the safe dismantling and removal of all building components and debris.

b. The Designated Authority (Government and contractor) shall be provided written evidence that the required surveys have been performed and shall be provided a copy of the demolition plan.

c. All employees engaged in demolition activities shall be instructed in the demolition plan so that they may conduct their work activities in a safe manner.

23.A.02 All electric, gas, water, steam, sewer, and other service lines shall be shut off, capped, or otherwise controlled outside the building line before demolition is started.

a. In each case, any utility company which is involved shall be notified in advance.

b. The contractor shall provide the Designated Authority (Government and contractor) with an engineering drawing (e.g., site plans, utility plans) which indicates the location of all service lines and the means for their control.

c. If it is necessary to maintain any power, water or other utilities during demolition, such lines shall be temporarily relocated and protected.

d. If the project includes the abandonment or demolition of existing gas lines, ensure that the existing lines are accurately located and that procedures and installations are accomplished in accordance with the American Gas Association's "*Guide for the Gas Transmission and Distribution (GTPC)*."

23.A.03 It shall be determined if any hazardous building materials, hazardous chemicals, gases, explosives, flammable materials, or dangerous substances have been used in any building construction, pipes, tanks, or other equipment on the property.

a. When such hazards are identified, testing shall be conducted to determine the type and concentration of the hazardous substance and test results provided to the Designated Authority (Government and contractor).

b. Such hazards shall be controlled or eliminated before demolition is started.

23.A.04 When employees work within a structure to be demolished which has been damaged by fire, flood, explosion,

or other cause, the walls or floor shall be shored or braced.

23.A.05 Work progression.

a. Except for cutting holes in floors for chutes, holes through which to drop materials, preparation of storage space, and similar preparatory work, the demolition of floors and exterior walls shall begin at the top of the structure and proceed downward.

b. Each story of exterior wall and floor construction shall be removed and dropped into the storage space before commencing the removal of exterior walls and floors in the next story below.

23.A.06 Hazards to anyone from the fragmentation of glass shall be controlled.

23.A.07 Mechanical equipment shall not be used on floors on working surfaces unless such floors or surfaces are of sufficient strength to support the imposed load.

23.A.08 Employee entrances to multistory structures being demolished shall be protected by sidewalk sheds, canopies, or both.

a. Protection shall be provided from the face of the building for a minimum of 2.4 m (8 ft).

b. All such canopies shall be at least 0.6 m (2 ft) wider than the building entrances or openings (0.3 m (1 ft) wider on each side), and shall be capable of sustaining a load of 1035 kPa (150 psi).

23.A.09 Only those stairways, passageways, and ladders designated as means of access to the structure shall be used.

a. The designated means of access shall be indicated on the demolition plan: other access ways shall be indicated as not

safe for access and closed at all times.

b. The stairwell shall be covered at a point no less than two floors below the floor on which work is being performed.

c. Access to a floor where work is in progress shall be through a separate lighted, protected passageway.

23.A.10 During demolition, continuing inspections by a competent person shall detect hazards resulting from weakened or deteriorated floors, walls, or loosened material: no employee shall be permitted to work where such hazards exist until they are corrected by shoring, bracing, or other means.

23.B DEBRIS REMOVAL

23.B.01 Any chute opening into which debris is dumped shall be protected by a guardrail 1 m (42 in) above the floor or other surface on which personnel stand to dump the material; any space between the chute and the edge of openings in the floors through which it passes shall be covered.

23.B.02 When debris is dropped through openings in the floors without chutes, the openings and the area onto which the material is dropped shall be enclosed with barricades not less than 1 m (42 in) high and not less than 1.8 m (6 ft) back from the projected edge of the opening above.

a. Signs warning of the hazard of falling materials shall be posted at each side of the debris opening at each floor.

b. Debris removal shall not be permitted in lower areas until debris handling ceases on the floors above.

23.B.03 All material chutes, or sections thereof, at an angle of more than 45° from the horizontal shall be enclosed, except for openings equipped with closures at or about floor level for the insertion of materials.

a. The openings shall not exceed 1.2 m (48 in) in height measured along the wall of the chute.

b. Such openings, when not in use, shall be kept closed at all floors below the top floor.

23.B.04 A substantial gate shall be installed in each chute at or near the discharge end: a competent employee shall be assigned to control operation of the gate and the backing and loading of trucks.

23.B.05 When operations are not in progress, the area surrounding the discharge end of a chute shall be closed.

23.B.06 Where material is dumped from mechanical equipment or wheelbarrows, a toeboard or bumper, not less than 10 cm (4 in) thick and 15 cm (6 in) high, shall be attached at each chute opening.

23.B.07 Chutes shall be designed and constructed of such strength as to eliminate failure due to impact of materials or debris loaded therein.

23.B.08 The storage of waste and debris on any floor shall not exceed the allowable floor loads.

23.B.09 In buildings having wood floor construction, the floor joists may be removed from not more than one floor above grade to provide storage space for debris provided falling material is not permitted to endanger the stability of the structure.

a. When wood floor beams serve to brace interior walls or free-standing exterior walls, such beams shall be left in place until other support can be installed to replace them.

b. Floor arches, to an elevation of not more than 7.5 m (25 ft) above grade, may be removed to provide storage area for debris provided such removal does not endanger the stability

of the structure.

c. Storage space into which material is dumped shall be blocked off, except for openings for the removal of materials; such openings shall be kept closed when material is not being removed.

d. Floor openings shall have curbs or stop-logs to prevent equipment from running over the edge.

e. Any opening cut in a floor for the disposal of materials shall be not longer in size than 25% of the aggregate of the total floor area, unless the lateral supports of the removed flooring remain in place; floors weakened or otherwise made unsafe by demolition shall be shored to carry safely the intended imposed load for demolition.

23.C WALL REMOVAL

23.C.01 Masonry walls, or sections of masonry, shall not be permitted to fall upon the floors of the building in such masses as to exceed the safe carrying capacities of the floors.

23.C.02 No wall section which is more than ten feet in height shall be permitted to stand without lateral bracing, unless such wall was designed and constructed to stand without such lateral support and is in a condition safe enough to be self-supporting. No wall section shall be left standing without lateral bracing any longer than necessary for removal of adjacent debris interfering with demolition of the wall. Exception to this requirement will be allowed for such wall sections which are designed and constructed to stand without lateral support.

23.C.03 Employees shall not be permitted to work on the top of a wall when weather constitutes a hazard.

23.C.04 Structural or load-supporting members on any floor shall not be cut or removed until all stories above such a floor have

been demolished and removed: this shall not prohibit the cutting of floor beams for the disposal of materials or for the installation of equipment, providing the requirements of 23.B.09 and 23.D. are met.

23.C.05 Floor openings within 3 m (10 ft) of any wall being demolished shall be planked solid, except when employees are kept out of the area below.

23.C.06 In buildings of skeleton-steel construction, the steel framing may be left in place during the demolition of masonry. Where this is done, all steel beams, girders, and structural supports shall be cleared of all loose material as the masonry demolition progresses downward.

23.C.07 Walls which serve as retaining walls to support earth or adjoining structures shall not be demolished until such earth has been braced or adjoining structures have been underpinned. See 23.A.05.

23.C.08 Walls shall not be used to retain debris unless capable of safely supporting the imposed load.

23.D FLOOR REMOVAL

23.D.01 Openings cut in a floor shall extend the full span of the arch between supports.

23.D.02 Before demolishing any floor arch, debris and other material shall be removed from such arch and other adjacent floor area.

a. Planks not less than 5 cm x 25 cm (2 in x 10 in) in cross section, full sized undressed, shall be provided for and shall be used by employees to stand on while breaking down floor arches between beams.

b. Such planks shall be so located as to provide a safe

support for personnel should the arch between the beams collapse.

c. Straddle space between planks shall not exceed 40 cm (16 in).

23.D.03 Safe walkways, not less than 45 cm (18 in) wide, formed of wood planks not less than 5 cm (2 in) thick or of equivalent strength, shall be provided and used by personnel when necessary to enable them to reach any point without walking upon exposed beams.

23.D.04 Stringers of ample strength shall support the flooring planks: the ends of such stringers shall be supported by floor beams or girders and not by floor arches alone.

23.D.05 Planks shall be laid together over solid bearings with the ends overlapping at least 0.3 m (1 ft).

23.D.06 When floor arches are being removed, employees shall not be allowed in the area directly underneath; the area shall be barricaded to prevent access and signed to warn of the hazard.

23.E STEEL REMOVAL

23.E.01 When floor arches have been removed, planking shall be provided for the workers razing the steel framing.

23.E.02 Steel construction shall be dismantled column-by-column and tier-by-tier (columns may be in two-story lengths).

23.E.03 Any structural member being dismembered shall not be overstressed.

23.F MECHANICAL DEMOLITION

23.F.01 No person shall be permitted in any area which can be affected by demolition when balling or clamming is being

performed: only those persons necessary for the operations shall be permitted in this area at any other time.

23.F.02 The weight of the demolition ball shall not exceed 50% of the crane's rated load, based on the length of the boom and the maximum angle of operation at which the demolition ball will be used, or it shall not exceed 25% of the nominal breaking strength of the line by which it is suspended,
whichever is less.

23.F.03 The crane boom and load line shall be as short as possible.

23.F.04 The ball shall be attached to the loadline with a swivel connection to prevent twisting of the loadline and shall be attached by positive means so that the weight cannot accidently disconnect.

23.F.05 When pulling over walls or portions of walls, all steel members affected shall have been cut free.

23.F.06 All roof cornices or other ornamental stonework shall be removed prior to pulling walls over.

DEFINITIONS

Floor arch: the masonry arch shaped filling between steel floor beams or girders, whatever the type of flooring system.

SECTION 24

FLOOR AND WALL HOLES AND OPENINGS

24.A GENERAL

24.A.01 All floor and roof openings into which persons can accidentally walk or fall through shall be guarded by a physical barrier or covered.

24.A.02 All floor and roof holes through which equipment, materials, or debris can fall shall be covered.

24.A.03 Coverings for floor and roof openings shall be of sufficient strength to support any load which may be imposed and shall be secured in place to prevent accidental removal or displacement.

24.A.04 Conduits, trenches, and manhole covers and their supports, when exposed to vehicles or equipment, shall be designed to carry a truck rear axle load of 2 times the maximum anticipated load.

24.A.05 Wall openings, from which there is a drop of more than 1.2 m (4 ft) and the bottom of the opening is less than .9 m (3 ft) above the working surface, shall be guarded with a top rail or a top rail and intermediate rail or a standard guardrail. A toeboard or enclosing screen shall be provided where the bottom of the wall opening, regardless of width, is less than 10 cm (4 in) above the working surface.

24.A.06 Wall opening protection shall meet one of the following requirements:

a. barriers of such construction and mounting that, when in place at the opening, the barrier is capable of withstanding a

load of at least 90 kg (200 lb) applied in any direction (except upward) with a minimum of deflection at any point on the top rail or corresponding member, or

b. screens of such construction and mounting that they are capable of withstanding a load of at least 90 kg (200 lb) applied horizontally at any point on the near side of the screen: they may be of solid construction, or grill work with openings not more than 20 cm (8 in) long, or of slat work with openings not more than 10 cm (4 in) wide with length unrestricted.

24.A.07 Every hatchway and chute floor opening shall be guarded by a hinged floor-opening cover. The opening shall be barricaded with railings so as to leave only one exposed side; the exposed side shall be provided either with a swinging gate or so offset that a person cannot walk into the opening.

24.A.08 An extension platform outside a wall opening onto which materials can be hoisted for handling shall have a standard railing that meets Section 21.B of this manual. However, one side of an extension platform may have removable railings to facilitate handling materials.

DEFINITIONS

Floor (roof) hole: a ground, floor, or roof opening measuring less than 30 cm (12 in) but more than 2.5 cm (1 in) in its least dimension.

Floor (roof) opening: a ground, floor, or roof opening measuring 30 cm (12 in) or more in its least dimension; <u>includes</u> <u>skylights</u>.

Wall hole: a wall opening less than 75 cm (30 in) but more than 2.5 cm (1 in) in height and of unrestricted width.

Wall opening: a wall opening at least 75 cm (30 in) high and 45 cm (18 in) wide.

SECTION 25

EXCAVATIONS

25.A GENERAL

25.A.01 Planning.

a. Prior to opening an excavation, underground installations (e.g., sewer, telephone, water, fuel, electric lines) shall be located and protected from damage or displacement: utility companies and other responsible authorities shall be contacted to locate and mark the locations and, if they so desire, direct or assist with protecting the underground installations.

b. Where excavations are to be performed in areas known or suspected to be contaminated with explosives, unexploded munitions, or military ordnance, surface and subsurface clearance by qualified explosive ordnance disposal (EOD) personnel shall be accomplished prior to excavation work.

25.A.02 Excavation inspection and testing.

a. When persons will be in or around an excavation, the excavation, the adjacent areas, and protective systems shall be inspected daily, as needed throughout the work shifts, and after every rainstorm or other hazard-increasing occurrence by a competent person.

b. If evidence of a situation which could result in possible cave-ins, slides, failure of protective systems, hazardous atmospheres, or other hazardous condition is identified, exposed workers shall be removed from the hazard and all work in the excavation stopped until all necessary safety precautions have been implemented.

c. In locations where oxygen deficiency or gaseous

conditions are known or suspected, air in the excavation shall be tested prior to the start of each shift or more often if directed by the designated authority: a log of all test results shall be maintained at the work site. ***> See Sections 5 and 6***

25.A.03 Protective systems.

a. The sides of all excavations in which employees are exposed to danger from moving ground shall be guarded by a support system, sloping or benching of the ground, or other equivalent means.

b. Excavations less than 1.5 m (5 ft) in depth and which a competent person examines and determines there to be no potential for cave-in do not require protective systems.

c. Sloping or benching of the ground shall be in accordance with Section 25.C.

d. Support systems shall be in accordance with Section 25.D.

e. Protective systems shall have the capacity to resist without failure all loads that are intended or could reasonably be expected to be applied to the system.

25.A.04 Stability of adjacent structures.

a. Except in stable rock, excavations below the level of the base of footing of any foundation or retaining wall shall not be permitted unless:

(1) a support system, such as underpinning, is provided to ensure the stability of the structure and to protect employees involved in the excavation work or in the vicinity thereof; or
(2) a registered professional engineer has approved the determination that the structure is sufficiently removed from the excavation so as to be unaffected by the excavation and

that the excavation will not pose a hazard to employees.

b. If the stability of adjoining buildings or walls is endangered by excavations, shoring, bracing, or underpinning designed by a qualified person shall be provided to ensure the stability of the structure and to protect employees.

c. Sidewalks, pavements, and related structures shall not be undermined unless a support system is provided to protect employees and the sidewalk, pavement, or related structure.

25.A.05 Where it is necessary to undercut the side of an excavation, overhanging material shall be safely supported.

25.A.06 Protection from water.

a. Diversion ditches, dikes, or other means shall be used to prevent surface water entering an excavation and to provide good drainage of the area adjacent to the excavation.

b. Employees shall not work in excavations in which there is accumulated water or in which water is accumulating unless the water hazards posed by accumulation is controlled.

(1) Freezing, pumping, drainage, and similar control measures shall be planned and directed by a registered engineer. Consideration shall be given to the existing moisture balances in surrounding soils and the effects on foundations and structures if it is disturbed.

(2) When continuous operation of ground water control equipment is necessary, an emergency power source shall be provided. Water control equipment and operations shall be monitored by a competent person to ensure proper operation.

25.A.07 Protection from falling material.

a. Employees shall be protected (by scaling, ice removal,

benching, barricading, rock bolting, wire mesh, or other means) from loose rock or soil which could create a hazard by falling from the excavation wall. Special attention shall be given to slopes which may be adversely affected by weather, moisture content, or vibration.

b. Materials, such as boulders or stumps, that may slide or roll into the excavation shall be removed or made safe.

c. Excavated material shall be placed at least 0.6 m (2 ft) from the edge of an excavation or shall be retained by devices which are sufficient to prevent the materials from falling into the excavation. In any case, material shall be placed at a distance to prevent excessive loading on the face of the excavation.

25.A.08 Mobile equipment and motor vehicle precautions.

a. When vehicles or mobile equipment are utilized or allowed adjacent to an excavation, substantial stop logs or barricades shall be installed: the use of a ground guide is recommended.

b. Workers shall stand away from vehicles being loaded or unloaded to avoid being struck by spillage or falling materials.

c. Excavating or hoisting equipment shall not be allowed to raise, lower, or swing loads over personnel in the excavation without substantial overhead protection.

25.A.09 Employees shall not be permitted to work on the faces of sloped or benched excavations at levels above other employees except when employees at lower levels are adequately protected from the hazard of falling material or equipment.

25.A.10 When operations approach the location of underground utilities, excavation shall progress with caution until the exact location of the utility is determined. Workers shall be protected from the utility and the utility from damage or displacement.

25.A.11 Employees entering excavations classified as confined spaces or which otherwise present the potential for emergency rescue shall wear a harness with a lifeline securely attached to it. ***> See Section 5.F***

25.B SAFE ACCESS

25.B.01 Protection shall be provided to prevent personnel, vehicles, and equipment from falling into excavations. Protection shall be provided according to the following hierarchy. ***> See definitions of Class I, Class II, and Class III perimeter protection***

a. if the excavation is exposed to members of the public (e.g., other than those individuals engaged in project-specific work at the site) or vehicles or equipment, then Class I perimeter protection is required;
b. if the excavation does not meet the requirements for Class I perimeter protection but is (1) routinely exposed to employees and (2) either is deeper than 1.8 m (6 ft) or contains hazards (e.g., impalement hazards, hazardous substances), then Class II perimeter protection is the minimum protection required; when workers are in the zone between the warning barricades/flagging and the excavation, they shall be provided with fall protection as specified in Section 21;
c. if the excavation does not meet the requirements for either Class I or Class II perimeter protection, then Class III perimeter protection is the minimum protection required.

25.B.02 All wells, calyx holes, pits, shafts, etc., shall be barricaded or covered.

25.B.03 Excavations shall be backfilled as soon as possible. Upon completion of exploration and similar operations, test pits, temporary wells, calyx holes, etc., shall be backfilled immediately.

25.B.04 Walkways or bridges with standard guardrails shall be provided where people or equipment are required or permitted to

cross over excavations.

25.B.05 Where personnel are required to enter excavations over 1.2 m (4 ft) in depth, sufficient stairs, ramps, or ladders shall be provided to require no more than 7.5 m (25 ft) of lateral travel.

a. At least two means of exit shall be provided for personnel working in excavations: where the width of the excavation exceeds 30 m (100 ft), two or more means of exit shall be provided on each side of the excavation.

b. When access to excavations in excess of 6 m (20 ft) in depth is required, ramps, stairs, or mechanical personnel hoists shall be provided.

25.B.06 Ramps. ***> See Sections 21.B and 21.F***

a. Ramps used solely for personnel access shall be a minimum width of 1.2 m (4 ft) and provided with standard guardrails.

b. Ramps used for equipment access shall be a minimum width of 3.6 m (12 ft); curbs not less than 20 cm x 20 cm (8 in x 8-in) timbers, or equivalent protection, shall be provided: equipment ramps shall be designed and constructed in accordance with accepted engineering practice.

25.B.07 Ladders used as accessways shall extend from the bottom of the excavation to not less than 0.9 m (3 ft) above the surface.

25.C SLOPING AND BENCHING

25.C.01 Sloping or benching of the ground shall be in accordance with one of the systems outlined in a through c below:

a. For excavations less than 6 m (20 ft) in height, the maximum slope shall be 34° measured from the horizontal (1-1/2 horizontal to 1 vertical).

b. The design shall be selected from and be in accordance with written tabulated data, such as charts and tables. At least one copy of the tabulated data shall be maintained at the job site during excavation. The tabulated data shall include:

(1) identification of the parameters that affect the selection of a sloping or benching system drawn from the data,
(2) identification of the limits of use of the data, to include the magnitude and configuration of slopes determined to be safe,
(3) explanatory information as may be necessary to aid the user in correctly selecting a protective system from the data, and
(4) the identity of the registered professional engineer who approved the data.

c. The sloping or benching system shall be designed by a registered engineer. At least one copy of the design shall be maintained at the job site during excavation. Designs shall be in writing and include:

(1) the magnitudes and configurations of the slopes that were determined to be safe for the particular excavation, and
(2) the identity of the registered engineer who approved the design.

25.D SUPPORT SYSTEMS

25.D.01 Support systems shall be in accordance with one of the systems outlined in a through c below:

a. Designs drawn from manufacturer's tabulated data shall be in accordance with all specifications, limitations, and recommendations issued or made by the manufacturer.

(1) Deviation from the specifications, recommendations, and limitations are only allowed after the manufacturer issues specific written approval.
(2) A copy of the manufacturer's specifications, recommendations, and limitations - and the manufacturer's

approval to deviate from these, if required - shall be in written form and maintained at the job site during excavation.

b. Designs shall be selected from and be in accordance with tabulated data (such as tables and charts). At least one copy of the tabulated data which shall be maintained at the job site during excavation. The tabulated data shall include:

(1) identification of the parameters that affect the selection of the protective system drawn from such data,
(2) identification of the limits of use of the data, and
(3) explanatory information as may be necessary to aid the user in correctly selecting a protective system from the data, and
(4) the identity of the registered professional engineer who approved the data.

c. Designed by a registered engineer. At least one copy of the design shall be maintained at the job site during excavation. Designs shall be in writing and include:

(1) a plan indicating the sizes, types, and configurations of the materials to be used in the protective system, and
(2) the identity of the registered engineer who approved the design.

25.D.02 Materials and equipment used for protective systems.

a. Materials and equipment shall be free from damage or defects that might impair their proper function.

b. Manufactured materials and equipment shall be used and maintained in a manner consistent with the recommendations of the manufacturer and in a manner that will prevent employee exposure to hazards.

c. When material or equipment is damaged, a competent person shall examine the material or equipment and evaluate its suitability for continued use.

25.D.03 Installation and removal of support systems.

a. Members of support systems shall be securely connected together to prevent sliding, falling, kickouts, or other predictable failure.

b. Support systems shall be installed and removed in manners that protect employees from cave-ins, structural collapses, or from being struck by members of the support system.

c. Individual members of a support system shall not be subjected to loads exceeding those which they were designed to withstand.

d. Before temporary removal of individual members, additional precautions shall be taken to ensure the safety of employees, such as installing other structural members to carry the loads imposed on the support system.

e. Removal shall begin at and progress from the bottom of the excavation; members shall be released slowly as to note any indication of possible failure of the remaining members or possible cave-in of the sides of the excavation.

f. Backfilling shall progress together with the removal of support systems from excavations.

25.D.04 Shield systems.

a. Shields shall be installed in a manner to restrict lateral or other hazardous movement of the shield in the event of the application of sudden lateral loads.

b. Employees shall be protected from the hazard of cave-ins when entering or exiting the area protected by shields.

c. Employees shall not be allowed in shields when shields are being installed, removed, or moved vertically.

25.D.05 Additional requirements for trenching.

a. Installation of support systems shall be closely coordinated with excavations of trenches.

b. Bracing or shoring of trenches shall be carried along with the excavation.

c. Backfilling and removal of trench supports should progress together from the bottom of the trench: jacks or braces shall be released slowly and, in unstable soil, ropes shall be used to pull out the jacks or braces from above after personnel have cleared the trench.

d. Excavation of material to a level no greater than 0.6 m (2 ft) below the bottom of the members of a trench support system (including a shield) shall be permitted, but only if the system is designed to resist the forces calculated for the full depth of the trench and there are no indications while the trench is open of a possible loss of soil from behind or below the bottom of the support system.

25.E COFFERDAMS

25.E.01 If overtopping of the cofferdams by high water is possible, design shall include provisions for controlled flooding of the work area.

25.E.02 If personnel or equipment are required or permitted on cofferdams, standard railings, or equivalent protection, shall be provided.

25.E.03 At least two means of access shall be provided for personnel and equipment working on cofferdams.

25.E.04 A plan (including warning signals) for excavation of personnel and equipment in case of emergency and for controlled flooding shall be developed and posted.

25.E.05 Cofferdams located close to navigable shipping channels shall be protected from vessels in transit.

DEFINITIONS

Benching: a method of protecting employees from cave-ins by cutting the sides of the excavation in the arrangement of one or more horizontal levels, usually with vertical or near-vertical walls between steps.

Calyx hole: a hole, typically 75 cm (30 in) in diameter or larger, drilled into the earth primarily for subsurface exploration.

Class I perimeter protection: meets the following requirements.

a. When Class I perimeter protection guards against personnel falling into an excavation it shall meet the following. ***> See Section 21.B***

(1) the strength, height, and maximum deflection requirements for guardrails;
(2) provide fall protection equivalent to that provided by a toprail, midrail, and toeboard; and
(3) have post spacing equivalent to a standard guardrail.

b. When Class I perimeter protection guards against traffic (vehicles and/or equipment) falling into an excavation it shall be designed, by qualified person, to withstand the potential forces and bending moments due to impact by traffic; if the area adjacent to the barricade will be used by both personnel and vehicles or equipment, provisions shall be made for physically dividing the excavation, personnel, and traffic areas from one another.

Class II perimeter protection: Class II perimeter protection consists of warning barricades or flagging placed at a distance not closer than 1.8 m (6 ft) from the edge of the excavation: warning barricades of flagging do not have to meet the requirements for

Class I perimeter protection but do need to display an adequate warning at an elevation of 0.9 m (3 ft) to 1.2 m (4 ft) above ground level.

Class III perimeter protection: warning barricades or flagging placed a distance not closer than 15 cm (6 in) nor more than 1.8 m (6 ft) from the edge of the excavation: warning barricades or flagging do not have to meet the requirements for Class I perimeter protection but do need to display an adequate warning at an elevation of 0.9 m (3 ft) to 1.2 m (4 ft) above ground level.

Cofferdam: a temporary structure used to keep water (and earth) out of an excavation during construction of the permanent structure.

Protective system: a method of protecting employees from cave-ins, from material falling into an excavation, or from the collapse of adjacent structures; includes benching, sloping, shoring, trench shields, underpinning, rock bolting, etc.

Scaling: the removal of loose, overhanging, protruding, or otherwise precariously-positioned material from above or along the sides of an excavation.

Sheeting: see uprights.

Shield: a structure that is designed to withstand the forces imposed on it by the walls of an excavation and prevent cave-ins.

Shoring: a support member that resists compressive forces imposed by a load.

Sloping: a method of protecting employees from cave-ins by cutting the sides of the excavation in the arrangement of slopes. The angle of the slope needed to prevent cave-in is a function of the soil type, environmental factors such as moisture and freezing weather, and the magnitude and location of any loads and

vibration surcharged upon the slopes.

Stable rock: natural solid mineral material that can be excavated with vertical sides and remain intact while exposed.

Support system: a structural means of supporting the walls of an excavation to prevent cave-ins; includes shields, shoring, underpinning, rock bolts, etc.

Trench: an excavation which is narrow in relation to its length; in general, the depth is greater than the width, and the width is not greater than 4.5 m (15 ft).

Underpinning: the process of placing a new foundation beneath an existing foundation to replace or strengthen the existing foundation; shoring or other temporary support systems are used to support the underpinned structure until its loads can be effectively transferred to the new foundation.

Upright: a vertical structural support member. In excavation support systems, uprights are placed in contact with the earth and are usually spaced so that individual uprights do not contact one another. Uprights which are spaced such that they are in contact with or interconnected to one another are referred to as sheeting.

Waler: a horizontal structural member; in excavation support systems, walers are placed parallel to the face of the excavation and bear against uprights or the excavation wall.

SECTION 26

UNDERGROUND CONSTRUCTION (TUNNELS), SHAFTS, AND CAISSONS

26.A GENERAL

26.A.01 Access.

a. Access to all underground openings shall be controlled to prevent unauthorized entry.

b. Unused accessways or other openings shall be tightly covered or fenced off and shall be posted with warning signs indicating **KEEP OUT** or similar language.

c. Completed or unused sections of underground structures shall be barricaded.

d. See Section 6.I for confined space requirements.

26.A.02 Every location of underground construction shall have a check-in/check-out system that will ensure that above-ground personnel can determine the identification of all underground personnel.

26.A.03 Oncoming shifts shall be informed of any hazardous occurrences or conditions that have affected or might affect employee safety, including liberation of gas, equipment failures, earth or rock slides, cave-ins, flooding, fires, or explosions.

26.A.04 Communications.

a. In situations where unassisted voice communication is inadequate, power-assisted means shall be used to provide communication among workers and support personnel.

b. At least two effective means of communication - at least

one of which shall be voice communication - shall be provided in all shafts which are being developed or used either for personnel access or for hoisting.

c. Powered communication systems shall operate on an independent power supply and shall be installed so that the use of or disruption of any one phone or signal location will not disrupt the operation of the system from any other location.

d. Communication systems shall be tested upon initial entry of each shift to the underground and as often as necessary thereafter to ensure proper operation.

e. Any employee working alone underground who is both out of range of natural unassisted voice communication and not under observation by other persons shall be provided with effective means to communicate the need for and to obtain emergency assistance. Employees working alone shall be required to check in with their supervisor at least once an hour.

26.A.05 Emergency rescue plans and equipment.

a. Plans for rescuing personnel who might become injured or incapacitated while underground or in a shaft or caisson shall be developed.

(1) Plans shall be incorporated in either the accident prevention plan or the activity hazard analysis and posted at the job site.

(2) Plans shall be periodically reviewed with all affected personnel so that they maintain a working knowledge of emergency responsibilities and procedures.

(3) Emergency plans shall be drilled on a periodic basis to ensure their efficacy

b. Emergency equipment specified in the emergency plan shall be provided within 15 minutes of each portal or shaft entry.

Inspections and workability tests of the equipment shall be made and documented monthly.

c. When a shaft is used as a means of egress, arrangements shall be made for power-assisted hoisting capability to be readily available in an emergency, unless the regular hoisting means can continue to function during a power failure.

d. Hoisting devices used for emergencies shall be designed so that the load hoist drum is powered in both directions of rotation and so that the brake is automatically applied upon power release or failure.

e. Self-rescuing/emergency respirators with current approval from NIOSH and MSHA shall be immediately available to all employees at work stations in underground areas where they may be trapped by smoke or gas. ***> See Section 5.E.***

f. At least one designated person shall be on duty above ground whenever personnel are underground.

(1) The designated person shall be responsible for keeping an accurate count of employees underground and securing immediate aid in case of emergency.

(2) The designated person shall not be given other responsibilities which could affect his <u>or</u> <u>her</u> emergency response duties.

g. Each worker underground shall have an acceptable portable hand lamp or cap lamp in his<u>/her</u> work area for emergency use, unless natural light or an emergency lighting system provides adequate illumination for escape.

26.A.06 Rescue teams.

a. On job sites where less than twenty-five persons are underground at one time, provisions shall be made for at least

one five-person rescue team to be either on the job site or within 30 minutes travel time from the underground entry point: this rescue team may be provided by local emergency response services.

b. On job sites where twenty-five or more persons are underground at one time, provisions shall be made for at least two five-person rescue teams - one on the job site or within 30 minutes travel time from the underground entry point, and the other within 2 hours travel time. These rescue teams may be provided by local emergency response services.

c. Rescue team members shall be qualified in rescue procedures, the use and limitations of breathing apparatus, and the use of firefighting equipment.

d. On job sites where flammable or noxious gases are encountered or anticipated in hazardous quantities, rescue team members shall practice donning and using self-contained breathing apparatus monthly.

e. Rescue teams shall be kept informed of conditions at the job site which may impact their response.

26.A.07 In addition to the requirements of Section 5, personnel in wet underground areas shall wear rubber boots and rain gear.

26.A.08 First aid facilities.

a. A fully equipped first aid station and emergency transportation shall be provided at each underground construction project regardless of the number of persons employed.

b. If an underground construction project has multiple portals a first aid station or stations shall be provided at each portal or entry shaft or shall be so located between them that the distance from the station to each portal/entry shaft is less than

8 km (5 mi) and travel time less than 15 minutes.

26.A.09 Electrical and lighting.

a. All electrical systems used in hazardous locations must be approved for that location. ***> See Section 11.G***

b. Lighting circuits shall be installed on one side of the tunnel near the spring line and shall be mounted on insulators at each point of suspension.

c. Light fixtures shall be nonmetallic and weatherproof and mounted in a manner which provides safe clearance for personnel and equipment.

d. Only portable lighting equipment which is approved for the hazardous location shall be used within:

(1) storage areas, or
(2) 15 m (50 ft) of any underground heading during explosives handling.

26.A.10 Inspections and testing.

a. A program for testing all rock bolts for tightness shall be established. The frequency of testing shall be determined by rock conditions and the distance from vibration sources.

b. The employer shall examine and test the roof, face, and walls of the work area at the start of each shift and frequently thereafter.

c. Ground conditions along underground haulways and accessways shall be inspected as frequently as necessary to maintain safe passage.

d. All drilling and associated equipment to be used during a

shift shall be inspected before each shift by a competent person.

e. Drilling areas shall be inspected for hazards before drilling operations are started.

f. A competent person shall inspect haulage equipment before each shift.

g. Whenever defects affecting safety or health are identified the defects shall be corrected before activities are initiated or continued.

26.A.11 Protection from falling material.

a. Portal openings and access areas shall be guarded by shoring, fencing, head walls, shotcreting, or other equivalent means to ensure safe access of employees and equipment. Adjacent areas shall be scaled or otherwise secured to prevent loose soil or rock from endangering the portal and access areas.

b. Ground stability in hazardous subsidence areas shall be ensured by shoring, filling in, or by erecting barricades and posting warning signs to prevent entry.

c. Loose ground in underground areas that might be hazardous to employees shall be taken down, scaled, or supported.

d. Rock masses separated from the main mass by faults, joints, or fractures shall be secured by rock bolting or other suitable means or shall be removed: the means of securing shall be designed by a foundation engineer, an engineering geologist, or other qualified person.

e. Anchored chain-link fabric or other method approved by the designated authority shall be provided on rock faces subject to spalling.

f. Where tunnels are excavated through earth or shale, any excavation above or adjacent to portal areas shall be sloped to the angle of repose or held in place by ground supports. When undercutting occurs on these slopes - whether due to erosion or other causes - the overhanging material shall be promptly removed.

g. Where the need is indicated, a protective shelter shall be provided at each underground portal to protect persons and equipment from the hazards of falling rock or other material. The protective shelter shall project at least 4.5 m (15 ft) out from the portal.

h. Ice or snow buildup on rock faces or earth slopes which create a hazard shall be promptly removed.

26.A.12 Tunneling in soil.

a. Where tunnels are excavated by conventional methods, the excavation shall not be extended more than 60 cm (24 in) ahead of ground supports; where continuous mining machines are used for tunnel excavation, the excavation shall not be extended more than 120 cm (48 in) ahead of ground supports.

b. Under no circumstances shall persons be permitted to work in unsupported sections of the tunnels.

c. All voids in back of ground supports shall be filled, blocked, braced, or treated to prevent further cave-ins.

d. Where liner plate is not used for tunnel support, 5 cm (2 in) wire mesh or chain-link fabric shall be installed over the crown section, extending down to the spring line on each side of the tunnel and secured in place.

26.A.13 Ground support systems.

a. Torque meters or/and torque wrenches shall be used where

rock bolts are used for ground support.

b. Frequent tests shall be made to determine if bolts meet the required torque. the test frequency shall be determined by rock conditions and distance from vibration sources.

c. Rock bolt support systems shall be designed by a foundation engineer, a geologist, or other qualified person. Suitable protection shall be provided for employees exposed to the hazard of loose ground while installing ground support systems.

d. Support sets shall be installed so that the bottoms have sufficient anchorage to prevent ground pressures from dislodging the support base of the sets. Lateral bracing shall be provided between immediately adjacent sets to provide added stability.

e. Damaged or dislodged ground supports shall be repaired or replaced. Whenever possible, new supports shall be installed before removing the damaged supports.

f. A shield or other type of support shall be used to maintain a safe travelway for personnel working in dead-end areas ahead of any support replacement operation.

26.A.14 Material handling equipment.

a. Powered mobile haulage equipment shall have audible warning devices to inform personnel to stay clear. The operator shall sound the warning device before moving the equipment and whenever necessary during travel.

b. All vehicles and mobile equipment required to move in and out of underground construction areas shall have a revolving, flashing amber light, mounted so as to be visible in all directions. The flashing light shall be on whenever a vehicle or mobile equipment is in operation.

c. Haulage equipment shall be equipped with two headlights at both ends, a backup light, and an automatic backup alarm.

d. Conveyors used to transport muck from tunnels shall be installed, guarded, and maintained as required by Section 17. Fire extinguishers or equivalent protection shall be provided at the head and tail pulleys of underground belt conveyors and at 90 m (300 ft) intervals along the belt line.

e. No person shall ride haulage equipment unless it is equipped with seating for each passenger and passengers are protected from being struck, or crushed, or caught between other equipment or surfaces.

f. When dumping cars by hand, the car dumps shall be provided with tie-down chains or bumper blocks to prevent cars from overturning.

g. Where narrow-gage railroads are used for haulage, the tracks shall be secured to prevent shifting: no "humping" of mine dump cars shall be permitted.

h. Whenever rails serve as a return for a trolley circuit, both rails shall be bonded at every joint and cross-bonded every 60 m (200 ft).

I. Mine dump cars shall be equipped with automatic safety couplings, and cradle cars shall be equipped with a positive locking device to prevent accidental dumping.

j. Berms, bumper blocks, safety hooks, or equivalent means shall be provided to prevent overtravel and overturning of haulage equipment at dumping locations.

k. Bumper blocks or equivalent shall be provided at all track dead ends.

26.A.15 Vehicles not directly involved in work shall be kept away

from portals and separated from construction activities.

26.A.16 A caution sign reading **BURIED LINE** (or similar wording) shall be posted where air lines are buried or otherwise hidden by water or debris.

26.A.17 Where underground openings are located adjacent to sources of water with potential for causing flooding in the underground work area, measures shall be taken to ensure that the underground area cannot be flooded.

26.B HAZARDOUS CLASSIFICATIONS

26.B.01 Underground construction operations shall be classified in accordance with the following.

a. Underground construction operations shall be classified as potentially gassy operations if either:

(1) air monitoring discloses 10% or more of the lower explosive limit for methane or other flammable gases measured at 30 cm +/- 0.65 cm (12 in +/- 0.25 in) from the roof, face, floor, or walls for a period of more than 24 hours; or
(2) the history of the geological area or geological formation indicates that 10% or more of the lower explosive limit for methane or other flammable gas is likely to be encountered.

b. Underground operations shall be classified as gassy operations if:

(1) air monitoring discloses 10% or more of the lower explosive limit for methane or other flammable gases measured at 30 cm +/- 0.65 cm (12 in +/- 0.25 in) from the roof, face, floor, or walls for three consecutive days; or
(2) there has been an ignition of methane or other flammable gases emanating from the strata that indicates the presence of such gases; or
(3) the underground construction operation is both connected to

an underground work area which is currently classified as gassy and is also subject to a continuous course of air containing the flammable gas concentration.

26.B.02 Underground construction gassy operations may be downgraded to potentially gassy operations when air monitoring results remain under 10% of the lower explosive limit for methane or other flammable gases for three consecutive days.

26.B.03 Requirements for gassy operations.

a. Only equipment approved for the hazardous location and maintained in suitable condition shall be used in gassy operations.

b. Mobile diesel-powered equipment used in gassy operations shall be approved in accordance with the requirements of 30 CFR Part 36 by MSHA and State regulations and shall be operated in accordance with these requirements and the manufacturer's instructions.

c. Each entrance to a gassy operation shall be prominently posted with signs notifying all entrants of the gassy classification.

d. Smoking shall be prohibited in all gassy operations and the employer shall be responsible for collecting all personal sources of ignition, such as matches and lighters, from all persons entering a gassy operation.

e. A fire watch shall be maintained when hot work is performed.

f. Once an operation has been classified as gassy, all activities in the affected area - except the following - shall be discontinued until the operation either is in compliance with all gassy operation requirements or has been downgraded to potentially gassy:

(1) activities related to the control of the gas concentration;
(2) installation of new equipment, or conversion of existing equipment, to comply with subparagraph (1), above; and
(3) installation of above-ground controls for reversing the air flow.

26.C AIR MONITORING, AIR QUALITY STANDARDS, AND VENTILATION

26.C.01 Air monitoring requirements.

a. Air monitoring devices shall be inspected, calibrated, maintained, and used in accordance with the manufacturer's instructions: back-up monitoring devices shall be maintained in calibrated and working condition at the worksite. ***> See Section 6.A***

b. When air monitoring is required "as often as necessary," the competent person shall determine which substances to monitor and how frequently to monitor. Such determination shall be based on:

(1) the location of the job site and proximity to fuel tanks, sewers, gas lines, old landfills, coal deposits, and swamps;
(2) the geology of the job site, particularly the soil types and their permeability;
(3) any history of air contaminants in nearby job sites or any changes in air quality monitored during a previous shift; and
(4) work practices and job site conditions (use of diesel engines, explosives, or fuel gas, ventilation characteristics, visible atmospheric conditions, decompression of the atmosphere, welding, cutting, or hot work, etc.).

c. A record - including location, date, time, substance, monitoring results, and name of person conducting the test - of all air quality tests shall be maintained at the job site.

d. The atmosphere in all underground work areas shall be

tested as often as necessary to assure that the atmosphere at normal atmospheric pressure contains at least 19.5% oxygen and no more than 22% oxygen.

e. The atmosphere in all underground work areas shall be tested quantitatively for carbon monoxide, nitrogen dioxide, hydrogen sulfide, and other toxic gases, dusts, vapors, mists, and fumes as often as necessary to ensure that the permissible exposure limits are not exceeded.

f. The atmosphere in all underground work areas shall be tested quantitatively for methane and other flammable gases as often as necessary to determine whether action is to be taken under 26.C.02f-h and to determine whether an operation is to be classified gassy or potentially gassy under 26.B.01.

g. The atmosphere in all underground work areas shall be tested as often as necessary to ensure that the ventilation requirements of 26.C.03-05 are met.

h. If diesel-engine or gasoline-engine driven ventilating fans or compressors are used, an initial test shall be made of the inlet air of the fan or compressor, with the engine operating, to ensure that the air supply is not contaminated by engine exhaust.

I. When rapid excavation machines are used, a continuous flammable gas monitor shall be operated at the face with the sensor(s) placed as high and close to the front of the machine's cutter head as possible.

j. Operations which meet the criteria for potentially gassy or gassy operations shall be subjected to the following monitoring:

(1) tests for oxygen content shall be conducted in all affected work areas and work areas immediately adjacent to such areas at least at the beginning and midpoint of each shift;

(2) when using rapid excavation machines, continuous automatic flammable gas monitoring equipment shall be used to monitor the air at the heading, on the rib, and in the return air duct: the continuous monitor shall signal the heading and shut down electric power in the affected underground work area, except for acceptable pumping and ventilation equipment, when 20% or more of the lower explosive limit for methane or other flammable gases is encountered.

(3) a manual flammable gas monitor shall be used as needed, but at least at the beginning and midpoint of each shift, to ensure that the limits prescribed in 26.B 01 and 26.C.01d and f are not exceeded. In addition, a manual electrical shut down control shall be provided near the heading.

(4) local gas tests shall be made prior to and continuously during any welding, cutting, or other hot work.

(5) in underground operations driven by drill-and-blast methods, the air in the affected area shall be tested for flammable gas prior to re-entry after blasting and continuously when employees are working underground.

26.C.02 Air quality standards.

a. Whenever air monitoring indicates the presence of 5 ppm or more of hydrogen sulfide, a test shall be conducted in the affected underground work areas, at least at the beginning and midpoint of each shift, until the concentration of hydrogen sulfide has been less than 5 ppm for three consecutive days.

b. Whenever hydrogen sulfide is detected in an amount exceeding 10 ppm, a continuous sampling and indicating hydrogen sulfide monitor shall be used to monitor the affected work areas.

c. Employees shall be informed when a concentration of 10 ppm hydrogen sulfide is exceeded.

d. The continuous sampling and indicating hydrogen sulfide monitor shall be designed, installed, and maintained to provide

a visual and aural alarm when the hydrogen sulfide concentration reaches 10 ppm to signal that additional measures might be necessary to maintain hydrogen sulfide exposure below the permissible exposure limit.

e. When the competent person determines, on the basis of air monitoring results or other information, that air contaminants may be present in sufficient quantities to be dangerous to life, the employer shall:

(1) prominently post a notice at all entrances to the underground area to inform all entrants of the hazardous condition, and

(2) ensure that the necessary precautions are taken.

f. Whenever 5% or more of the lower explosive limit for methane or other flammable gases is detected in any underground work area or in the air return, steps shall be taken to increase ventilation air volume or otherwise control the gas concentration, unless operations are conducted in accordance with the potentially gassy or gassy operation requirements: such additional ventilation controls may be discontinued when gas concentrations are reduced below 5% of the lower explosive limit.

g. Whenever 10% or more of the lower explosive limit for methane or other flammable gases is detected in the vicinity of welding, cutting, or other hot work, such work shall be suspended until the concentration of such flammable gas is reduced to less than 10% of the lower explosive limit.

h. Whenever 20% or more of the lower explosive limit for methane or other flammable gases is detected in any underground work area or in the return:

(1) all employees, except those necessary to eliminate the hazard, shall be immediately withdrawn to a safe location above ground, and

(2) electrical power, except for acceptable pumping and

ventilation equipment, shall be cut off to the area endangered by the flammable gas until the concentration of such gas is reduced to less than 20% of the lower explosive limit.

I. When ventilation has been reduced to the extent that hazardous levels of methane or other flammable gas may have accumulated, all affected areas shall be tested after ventilation has been restored and before any power, other than for acceptable equipment, is restored or work is resumed and shall determine whether the atmosphere is within flammable limits.

j. Whenever the ventilation system has been shut down with all employees out of the underground area, only competent persons authorized to test for air contaminants shall be allowed underground until the ventilation has been restored and all affected areas have been tested for air contaminants and declared safe.

26.C.03 Ventilation.

a. Fresh air shall be supplied to all underground work areas in sufficient quantities to prevent dangerous accumulation of dusts, fumes, mists, gases, or vapors.

b. Mechanical ventilation shall be provided in all underground work areas except where it is demonstrated that natural ventilation provides the necessary air quality through sufficient air volume and air flow.

(1) ventilation and exhaust systems for tunnel excavation shall be of sufficient capacity to maintain an adequate supply of uncontaminated air at all points in the tunnel.

(2) the supply of fresh air shall not be less than 95 L/s (200 cfm) for each employee underground plus that necessary to operate the equipment.

(3) the linear velocity of air flow in all underground work areas

shall be at least 0.15 m/s (30 ft/min) where blasting or rock drilling is conducted or where there are other conditions likely to produce dusts, fumes, vapors, or gases in harmful quantities.

(4) the direction of mechanical air flow shall be reversible.

(5) ventilation doors shall be designed and installed so that they remain closed when in use, regardless of the direction of air flow.

c. Following blasting, ventilation systems shall exhaust smoke and fumes to the outside atmosphere before work is resumed in affected areas.

d. Potentially gassy or gassy operations shall have ventilation systems installed which are constructed of fire-resistant materials and have acceptable electrical systems, including fan motors.

e. Gassy operations shall be conducted with controls for reversing the air flow of ventilation systems located above ground.

f. In potentially gassy or gassy operations, wherever mine-type ventilation systems using an offset main fan installed on the surface are used, they shall be equipped with explosion-doors or a weak-wall having an area at least equivalent to the cross sectional area of the airway.

g. Air that has passed through underground oil or fuel-storage areas shall not be used to ventilate work areas.

26.C.04 When drilling rock or concrete, appropriate dust control measures shall be taken to maintain dust levels within safe limits.

26.C.05 Internal combustion engines, except diesel-powered engines on mobile equipment, are prohibited underground.

Mobile diesel-powered equipment used underground in atmospheres other than gassy operations shall be either approved by MSHA (30 CFR Part 32), or shall be demonstrated to be fully equivalent to such MSHA-approved equipment, and shall be operated in accordance with that part.

26.D FIRE PREVENTION AND PROTECTION

26.D.01 Fire prevention and protection plans.

a. For every underground construction project, a fire prevention and protection plan shall be developed and implemented. The plan shall detail:

(1) the specific work practices to be implemented for preventing fires;
(2) response measures to be taken in case of fire to control and extinguish the fire;
(3) equipment required for fire prevention and protection;
(4) personnel requirements and responsibilities for fire prevention and protection; and
(5) requirements for daily and weekly fire prevention and protection inspections.

b. Fire prevention and protection plans shall be incorporated in either the accident prevention plan or the activity hazard analysis and posted at the job site.

c. Fire prevention and protection plans shall be reviewed with all affected personnel as often as is necessary for them to maintain a working knowledge of emergency responsibilities and procedures.

d. Plans shall be drilled as often as is necessary to ensure their efficacy.

26.D.02 Fire extinguishers.

a. Fire extinguishers shall be provided and maintained in accordance with the requirements of Section 9.

b. Fire extinguishers - or equivalent protection - shall be provided and maintained at each portal and shaft entry, within 30 m (100 ft) of the advancing face of each tunnel, and at locations containing combustible materials.

c. A fire extinguisher of at least 4A:40B:C rating or other equivalent extinguishing means shall be provided at the head pulley and tail pulley of underground belt conveyors.

26.D.03 Open flames/fires and smoking.

a. Open flames and fires are prohibited in all underground construction operations except as permitted for welding, cutting, and other hot work operations.

b. Smoking may be allowed only in areas free of fire and explosion hazards.

c. Readily visible signs prohibiting smoking and open flames shall be posted in areas having fire or explosion hazards.

26.D.04 Heating devices used in tunnels shall be approved for such locations by a nationally-recognized testing laboratory.

26.D.05 Gasoline shall not be taken, stored, or used underground.

26.D.06 Acetylene, LP-Gas, and methylacetylene propadiene stabilized gas may be used underground only for welding, cutting, and other hot work: no more than the amount necessary for work during the next 24-hour period shall be permitted underground.

26.D.07 Only fire-resistant hydraulic fluids approved by a nationally recognized authority or agency shall be used in hydraulically actuated underground machinery and equipment unless the machinery or equipment is protected by a fire suppression system or a multi-purpose fire extinguisher rated for sufficient capacity for the type and size of hydraulic equipment involved (but at least 4A:40B:C).

26.D.08 Storage of flammable and combustible materials.

a. Not more than one day supply of diesel fuel may be stored underground.

b. Oil grease, and diesel fuel stored underground shall be kept in tightly sealed containers in fire resistant areas at least 90 m (300 ft) from underground explosive magazines and at least 30 m (100 ft) from shaft stations and steeply inclined passageways.

c. Flammable or combustible materials shall not be stored above ground within 30 m (100 ft) of any access opening to any underground operation unless they are located as far as practical from the opening and either a fire-resistant barrier of not less than one hour rating is placed between the stored material and the opening.

d. Electrical installations in underground areas where oil, grease, or diesel fuel are stored shall be used only for lighting fixtures.

e. Lighting fixtures in storage areas or within 7.5 m (25 ft) of underground areas where oil, grease, or diesel fuel are stored shall be approved for Class I, Division 2 locations. ***> See 11.G***

26.D.09 The piping of diesel fuel from the surface to an underground location is permitted only if:

a. diesel fuel is contained at the surface in a tank whose

maximum capacity is no more than the amount required to supply the equipment serviced by the underground fueling station for a 24-hour period;

b. the surface tank is connected to the underground fueling station by an acceptable pipe or hose system controlled at the surface by a valve, and at the shaft bottom by a hose nozzle (nozzle shall not be of the latch-open type);

c. the pipe is empty at all times except when transferring diesel fuel from the surface tank to a piece of equipment in use underground; and

d. hoisting operations in the shaft are suspended during refueling operations if the supply piping in the shaft is not protected from damage.

26.D.10 Any structure located underground or within 30 m (100 ft) of an opening to the underground shall be constructed of material having a fire resistance rating of at least 1 hour.

26.D.11 Oil-filled transformers shall not be used underground unless they are located in a fire-resistant enclosure and surrounded by a dike to contain the contents of the transformers in event of a rupture.

26.D.12 Noncombustible barriers shall be installed below welding or burning operations in or over shaft or raise.

26.E DRILLING

26.E.01 Drilling machines.

a. Employees shall not be allowed on a drill mast while the drill bit is in operation or the drill machine is being moved.

b. When drill machines are being moved from one drilling area

to another, drill steel, tools, and other equipment shall be secured and the mast placed in a safe position.

c. Drills on columns shall be anchored firmly before drilling is started and shall be retightened frequently.

d. Jumbos.

(1) Safe access shall be provided to all working levels of drill jumbos.

(2) Jumbo decks and stair treads shall be designed to be slip-resistant and secured to prevent accidental displacement.

(3) Only employees assisting the operator shall be allowed to ride on jumbos, unless the jumbo meets the requirements for adequate seating arrangements which protect passengers from being struck, crushed, or caught between equipment or surfaces and has safe access.

(4) Employees working under jumbo decks shall be warned whenever drilling is about to begin.

(5) On jumbo decks over 3 m (10 ft) in height, guardrails, which are removable, or equal protection shall be provided on all open sides, excluding access openings of platforms, unless an adjacent surface provides equivalent fall protection.

(6) Stair access to jumbo decks wide enough to accommodate two persons if the deck is over 3 m (10 ft) in height.

(7) Receptacles or racks shall be provided for drill steel stored on jumbos.

(8) The employer shall provide mechanical means for lifting drills, roof bolts, mine straps, and other material to the top decks of jumbos over 3 m (10 ft) in height.

26.E.02 Scaling bars shall be available at scaling operations and shall be maintained in good conditions at all times: blunted or severely worn bars shall not be used.

26.E.03 Blasting holes shall not be drilled through blasted rock (muck) or water.

26.E.04 Before commencing the drill cycle after a blast, the face and any remaining blasting holes shall be examined for misfires which, if found, shall be removed.

26.E.05 Employees in a shaft shall be protected either by location or by suitable barriers if powered mechanical loading equipment is used to remove muck containing unfired explosives.

26.F SHAFTS

26.F.01 All wells or shafts over 1.5 m (5 ft) in depth that employees must enter shall be supported by lagging, piling, or casing of sufficient strength to withstand shifting of the surrounding earth.

a. The full depth of the shaft shall be supported by casing or bracing except where the shaft penetrates into solid rock having characteristics that will not change because of exposure.

(1) Where the shaft passes through earth into solid rock or through solid rock into earth and where there is potential for shear, the casing or bracing shall extend at least 1.5 m (5 ft) into the solid rock.

(2) When the shaft terminates in solid rock, the casing of bracing shall extend to the end of the shaft or 1.5 m (5 ft) into the solid rock, whichever is less.

b. The casing or bracing shall extend 105 cm +/- 7.5 cm (42 in +/- 3 in) above ground level, except that the minimum casing height may be reduced to 30 cm (12 in) provided that a standard

railing is installed, that the ground adjacent to the top of the shaft is sloping away from the shaft collar to prevent entry of liquids, and that effective barriers are used to prevent mobile equipment operating near the shaft from jumping over the 30 cm (12 in) barrier.

26.F.02 After blasting operations in shafts, a competent person shall inspect the walls, ladders, timbers, blocking, and wedges to determined if they have loosened following blasting operations. Where found unsafe, corrections shall be made before shift operations are started.

26.F.03 No employee shall be permitted to enter an unsupported auger-type excavation in unstable material for any purpose: in such cases, necessary clean-out shall be accomplished without entry.

26.F.04 There shall be two safe means of access in shafts at all times: this may include the ladder and hoist.

26.G HOISTING

26.G.01 A warning light suitably located to warn employees at the shaft bottom and subsurface shaft entrances shall flash whenever a load is being moved in the shaft, except in fully enclosed hoistways.

26.G.02 Whenever a hoistway is not fully enclosed and employees are at the shaft bottom, conveyances or equipment shall be stopped at least 4.5 m (15 ft) above the bottom of the shaft and held there until the signalman at the bottom of the shaft directs the operator to continue lowering the load; except that the load may be lowered without stopping if the load or conveyance is within full view of a bottom signalman who is in constant voice communication with the operator.

26.G.03 Before maintenance, repairs, or other work is commenced in a shaft served by a cage, skip, or bucket, the

operator and other employees shall be informed and given suitable safety precautions: a sign warning that work is being performed in the shaft shall be installed at the shaft collar, at the operator's station, and at each underground landing.

26.G.04 Any connection between the hoisting rope and the cage or skip shall be compatible with the type of wire rope used for hoisting.

26.G.05 Spin-type connections, where used, shall be maintained in a clean condition and protected from foreign matter that could affect their operation.

26.G.06 Cage, skip, and load connections to the hoist rope shall be made so that the force of the hoist pull, vibration, misalignment, release of lift force, or impact will not disengage the connection: moused or latched open-throat hooks do not meet this requirement.

26.G.07 When using wire rope wedge sockets, means shall be provided to prevent wedge escapement and to ensure that the wedge is properly seated.

26.H CAISSONS

26.H.01 In caisson work in which compressed air is used and the working chamber is less than 3.3 m (11 ft) in length, whenever such caissons are at any time suspended or hung while work is in progress so that the bottom of the excavation is more than 2.7 m (9 ft) below the deck of the working chamber, a shield shall be erected for the protection of the workers.

26.H.02 Shafts shall be subjected to a hydrostatic test, at which pressure they shall be tight. The shaft shall be stamped on the outside shell about 30 cm (12 in) from each flange to show the safe working pressure.

25.H.03 Whenever a shaft is used, it shall be provided, where

space permits, with a safe, proper, and suitable staircase for its entire length, including landing platforms (not more than 6 m (20 ft) apart). Where this is impractical, ladders not more than 6 m (20 ft) high shall be installed with each section offset from adjacent sections and a guarded landing provided at each offset.

26.H.04 All caissons having a diameter or side greater than 3 m (10 ft) shall be provided with a man lock and shaft for the exclusive use of employees.

26.H.05 In addition to gauges in the locks, an accurate gauge shall be maintained on the outer and inner side of each bulkhead: these gauges shall be accessible at all times and kept in accurate working order.

26.H.06 In caisson operations where employees are exposed to compressed air working environments, the requirements of Section 26.I shall be complied with.

26.I COMPRESSED AIR WORK

26.I.01 All safety requirements for compressed air work will be carefully detailed in a compressed air work plan which shall be included as a part of the accident prevention plan or activity hazard analysis.

26.I.02 The compressed air work plan shall include the following considerations:

a. requirements for a medical lock and its operation.
b. an identification system for compressed air workers;
c. communications system requirements;
d. requirements for signs and record keeping;
e. special compression and decompression requirements;
f. man lock and decompression chamber requirements;
g. requirements for compressor systems and air supply;
h. ventilation requirements;
I. electrical power requirements;

j. sanitation considerations;
k. fire prevention and fire protection considerations; and
l. requirements for bulkheads and safety screens;

26.I.03 Work in compressed air environments shall be performed in compliance with the requirements of 29 CFR 1910.803.

26.J UNDERGROUND BLASTING

26.J.01 Explosives.

a. Dynamite used in tunnel blasting should be Fume Class 1: Fume Class 2 and Fume Class 3 explosives may be used if adequate ventilation is provided.

b. Storage of explosives, blasting agents, and detonators in tunnels or underground work areas shall be prohibited.

c. Trucks used for the transportation of explosives underground shall have the electrical system checked weekly to detect any failures which may constitute an electrical hazard: a written record of such inspections shall be kept on file and available for review. The installation of auxiliary lights on truck beds, which are powered by the truck's electrical system, shall be prohibited.

d. Explosives or blasting agents, not in original containers, shall be placed in a suitable container when transported manually; detonators, primers, and other explosives shall be carried in separate containers when transported manually.

26.J.02 Blasting circuits.

a. All underground blasts fired by external power shall be by a power blasting switch system shown in Figure 29-1.

b. Blasting power circuits shall be separate and distinct from, and kept clear of, other power and lighting circuits and pipes, rails, and other conductive material (excluding earth) to prevent

explosives initiation or employee exposure to electric current.

c. Sectioning switches or equivalent shall be installed in the firing line at 150 m (500 ft) intervals.

26.J.03 Loading.

a. Prior to loading, all power, water, and air lines shall be disconnected from the loading jumbo and power lines, including lighting circuits, shall be moved back a minimum of 15 m (50 ft).

b. The loading area shall be illuminated (minimum 110 lx (10 footcandles)) by floodlights located 15 m (50 ft) from the face. If additional illumination is needed, the loading crew shall be provided with head lamps approved by the United States Bureau of Mines.

c. Equipment used for pneumatic placement of non-cap-sensitive blasting agents shall be designed for that purpose and shall be grounded while in use.

26.J.04 Blasting.

a. The person in charge of blasting shall be the last to leave the blast area, shall see that no one remains in the blast area, and shall operate the sectioning switches in the firing line while proceeding out of the blast area.

b. No persons shall enter the tunnel blast area until the ventilation system has cleared the heading of harmful gases, smoke, and dust.

c. After each blast the underground supports in the blast area shall be inspected and secured as necessary before work is resumed. Rock surfaces shall be inspected, scaled, and if required, provided with shoring, bracing, rock bolts, shotcrete, or chain-link fabric, before mucking is started. Rock bolts within

30 m (100 ft) of a blast shall be tested after each blast before drilling for the next round begins.

d. The muck pile shall be wet down prior to mucking and kept wet during mucking operations.

26.J.05 Blasting in excavation work under compressed air.

a. When detonators or explosives are brought into an air lock, no employee - except the blaster, lock tender, and employees necessary for transport - shall be permitted to enter the air lock; no other material, supplies, or equipment shall be locked through with the explosive materials.

b. Detonators and explosives shall be taken separately into pressure working chambers.

c. All metal pipes, rails, air locks, and steel tunnel lining shall be electrically bonded and grounded at or near the portal or shaft, and such pipes and rails shall be cross-bonded at not less than 300 m (1000 ft) intervals throughout the length of the tunnel; in addition, each low air supply pipe shall be grounded at its delivery end.

d. The explosive suitable for use in wet holes shall be water resistant and shall be Fume Class 1.

e. When tunnel excavation in rock face is approaching mixed face, and when tunnel excavation is in mixed face, blasting shall be performed with light charges and with light burden on each hole; advance drilling shall be performed as tunnel excavation in rock face approaches mixed face to determine the nature and extent of rock cover and the remaining distance ahead to soft ground.

26.J.06 See Section 29 for blasting requirements.

DEFINITIONS

Caisson: a watertight chamber (of wood or steel sheeting or a concrete or steel cylinder) used in construction work underwater or as a foundation. When the bottom of the structure extends below the surface of free water, excavation is performed by workers in a working chamber at an air pressure greater than atmospheric pressure.

Face: that part of the tunnel or shaft where excavation is in progress or was last done; the vertical surface at the head of a tunnel excavation.

Humping: the use of an elevated or "humped" rail in switching cars. On one side of the hump, cars are pushed up the rail by an engine; on the other side of the hump, cars are switched, by gravity, to their proper tracks.

Lagging: timber planks, steel plates, or other structural members used for transferring loads and supporting soil or rock.

Portal: the entrance to a tunnel.

Shaft: a passage made from the surface of the ground to a point underground; shafts cut through the ground at an angle greater than 20 to the horizontal. ***> See definition of tunnel***

Spring line: an imaginary line connecting the points at which the ceiling (roof) arches begin.

Tunnel: an excavation beneath the surface of the ground, the longer axis of which makes an angle not greater than 20° to the horizontal. ***> See definition of shaft***

SECTION 27

CONCRETE AND MASONRY CONSTRUCTION AND STEEL ERECTION

27.A CONCRETE AND MASONRY CONSTRUCTION-GENERAL

27.A.01 Construction loads shall not be placed on a concrete or masonry structure or portion of a concrete or masonry structure unless the employer determines, based on information from a person who is qualified in structural design, that the structure or portion of the structure is capable of supporting the loads.

27.A.02 Employees shall not be permitted to work above or in positions exposed to protruding reinforcing steel or other impalement hazards unless provisions have been made to control the hazard.

27.A.03 Post-tensioning operations.

a. No employee (except those essential to the post-tensioning operations) shall be permitted to be behind jacks or end anchorages during post-tensioning operations.

b. Signs and barriers shall be erected to limit employee access to the post-tensioning area during tensioning operations.

27.A.04 Equipment.

a. Bulk storage bins, containers, or silos shall have conical or tapered bottoms with mechanical or pneumatic means of starting the flow of material.

b. Concrete mixers equipped with 1-yard or larger loading skips shall be equipped with a mechanical device to clear the skip of material and shall have guardrails installed on each side of the skip.

c. Handles on bull floats used where they may contact energized electrical conductors shall be constructed of nonconductive material or insulated with a nonconductive sheath whose electrical and mechanical characteristics provide equivalent protection.

d. Powered and rotating concrete troweling machines that are manually guided shall be equipped with a control switch that will automatically shut off the power whenever the operator removes his/her hands from the equipment handles.

e. Concrete pumping systems using discharge pipes shall be provided with pipe supports designed for 100% overload.

f. Handles of concrete buggies shall not extend beyond the wheels on either side of the buggy.

g. Concrete buckets equipped with hydraulic or pneumatically operated gates shall have positive safety latches or similar safety devices installed to prevent premature or accidental dumping; the buckets shall be designed to prevent material from accumulating on the top and sides of the bucket.

h. Sections of tremies and similar concrete conveyances shall be secured with wire rope (or equivalent material) in addition to the regular couplings or connections.

27.A.05 Riding on concrete buckets shall be prohibited.

27.A.06 Elevated concrete buckets shall be routed, to the extent practical, to minimize the exposure of workers to hazards associated with falling buckets or concrete; vibrator crews shall be kept out from under concrete buckets suspended from cranes of cableways.

27.A.07 Structural and reinforcing steel for walls, piers, columns, and similar vertical structures shall be supported and/or guyed to prevent overturning or collapse: support systems for reinforcing

steel that are independent of other form or shoring support systems shall be designed by a registered engineer.

a. Connections of equipment used in plumbing-up shall be secured.

b. The turnbuckles shall be secured to prevent unwinding while under stress.

c. Plumbing-up guys and related equipment shall be placed so that employees can get at the connection points.

d. Plumbing-up guys shall be removed only under the supervision of a competent person.

27.A.08 Measures shall be taken to prevent unrolled wire mesh from recoiling.

27.B FORMWORK AND SHORING

27.B.01 All formwork, shoring, and bracing shall be designed, fabricated, erected, supported, braced, and maintained so that it will safely support all vertical and lateral loads that might be applied until such loads can be supported by the structure.

27.B.02 Planning and design.

a. The planning and design of formwork and shoring shall be in accordance with provisions of American Concrete Institute Publication ACI 347R, *Guide to Formwork for Concrete*.

b. The design and the erection and removal plans for formwork and shoring shall be submitted for review to the Designated Authority.

c. The manufacturer's specifications for fabricated shoring systems shall be available at the job site during job planning

and execution.

27.B.03 Base support.

a. Supporting ground or completed construction upon which formwork and shoring is to be placed shall be of adequate strength to carry the vertical and lateral loads to be imposed.

b. Sills for shoring shall be sound, rigid, and capable of carrying the maximum intended load.

c. Baseplates, shore heads, extension devices, or adjustment screws shall be in firm contact with the footing sill and form material and, as applicable, shall be snug against the posts.

27.B.04 Splices shall be designed and constructed to prevent buckling and bending.

27.B.05 Diagonal bracing shall be provided in vertical and horizontal planes to provide stiffness and to prevent buckling of individual members.

27.B.06 Inspection.

a. All shoring equipment shall be inspected prior to erection to determine that it is as specified in the shoring design: any equipment found to be damaged shall not be used.

b. Erected shoring equipment shall be inspected immediately prior to, during, and immediately after the placement of concrete: any shoring equipment that is found to be damaged, displaced, or weakened shall be immediately reinforced or reshored.

27.B.07 Reshoring shall be provided to safely support slabs and beams after stripping or where such members are subjected to superimposed loads due to construction.

27.B.08 Fabricated shoring shall not be loaded beyond the safe working load recommended by the manufacturer.

27.B.09 Single post shores.

a. Wherever single post shores are used in more than one tier, the layout shall be designed and inspected by an engineer qualified in structural design.

b. Single post shores shall be vertically aligned and spliced to prevent misalignment.

c. When shoring is at an angle, sloping, or when the surface shored is sloping, the shoring shall be designed for such loading.

d. Adjustment of single post shores to raise formwork shall not be made after concrete is in place.

e. Fabricated single post shores and adjusting devices shall not be used if heavily rusted, bent, dented, rewelded, or have broken weldments or other defects; if they contain timber, they shall not be used if timber is split, cut, has sections removed, is rotted, or otherwise structurally damaged.

f. All timber and adjusting devices to be used for adjustable timber single post shores shall be inspected before erection.

g. All nails used to secure bracing or adjustable timber single post shores shall be driven home and the point of the nail bent over if possible.

h. For stability, single post shores shall be horizontally braced in both the longitudinal and transverse directions.

(1) Single-post shores shall be adequately braced in two mutually perpendicular directions at the splice level.

(2) Each tier shall also be diagonally braced in the same two directions.
(3) Bracing shall be installed as the shores are erected.

27.B.10 Tube and coupler shoring.

a. The material used for the couplers shall be of a structural type such as drop-forged steel, malleable iron, or structural grade aluminum. Gray cast iron shall not be used. No dissimilar metals shall be used together.

b. Couplers shall not be used if they are deformed, broken, or have defective or missing threads on bolts, or other defects.

c. When checking the erected shoring towers with the shoring design, the spacing between posts shall not exceed that shown on the layout and all interlocking of tubular members and tightness of couplings shall be checked.

27.B.11 Tubular welded-frame shoring.

a. All locking devices on frames and braces shall be in good working order, coupling pins shall align the frame or panel legs, pivoted cross braces shall have their center pivot in place, and all components shall be in a condition similar to that of original manufacture.

b. When checking the erected shoring frames with the shoring design, the spacing between towers and cross brace spacing shall not exceed that shown in the design and all locking devices shall be closed.

c. Devices for attaching external lateral stability bracing shall be fastened to the legs of the shoring frames.

27.B.12 Vertical slip forms.

a. The steel rods or pipe on which the jacks climb or by

which the forms are lifted shall be designed specifically for that purpose: such rods shall be braced where not encased in concrete.

b. Jacks and vertical supports shall be positioned in such a manner that the vertical loads are distributed equally and do not exceed the capacity of the jacks.

c. The jacks or other lifting devices shall be provided with mechanical dogs or other automatic holding devices to provide protection in case of failure of the power supply or the lifting mechanism.

d. Lifting shall proceed steadily and uniformly and shall not exceed the predetermined safe rate of lift.

e. Lateral and diagonal bracing of the forms shall be provided to prevent excessive distortion of the structure during the jacking operation.

f. During jacking operations, the form structure shall be maintained in line and plumb.

g. All vertical lift forms shall be provided with scaffolding or work platforms completely encircling the area of placement.

27.B.13 Removal of formwork.

a. Forms and shores (except those on slab or grade and slip forms) shall not be removed until the individual responsible for forming and/or shoring determines that the concrete has gained sufficient strength to support its weight and all superimposed loads. Such determination shall be based on one of the following:

(1) satisfaction of conditions stipulated in the plans and specifications for removal of forms and shores, or
(2) concrete testing (in accordance with ASTM standard test

methods) indicates that the concrete has achieved sufficient strength to support its weight and superimposed loads.

b. Reshoring shall not be removed until the concrete being supported has attained adequate strength to support its weight and all loads placed on it.

27.C PRECAST CONCRETE OPERATIONS

27.C.01 Precast concrete members shall be adequately supported to prevent overturning or collapse until permanent connections are complete.

27.C.02 Lifting inserts and hardware.

a. Lifting inserts which are embedded or otherwise attached to tilt-up precast concrete members shall be capable of supporting at least two times the maximum intended load applied or transmitted to them.

b. Lifting inserts which are embedded or otherwise attached to precast concrete members, other than tilt-up members, shall be capable of supporting at least four times the maximum intended load applied or transmitted to them.

c. Lifting hardware shall be capable of supporting at least five times the maximum intended load applied or transmitted to the lifting device.

27.C.03 No employee shall be permitted under precast concrete members being lifted or tilted into position except employees required for the erection of those members.

27.D LIFT-SLAB OPERATIONS

27.D.01 Lift-slab operations shall be planned and designed by a registered engineer or architect: such plans and designs shall include detailed instructions and sketches indicating the

prescribed method of erection and shall be submitted to the Designated Authority for review.

27.D.02 Jacking equipment.

a. The manufacturer's rated capacity shall be legibly marked on all jacks and shall not be exceeded.

b. Threaded rods and other members that transmit loads to the jacks shall have a minimum safety factor of 2.5

c. Jacks shall be designed and installed so that they will not continue to lift when overloaded.

d. All jacks shall have a positive stop to prevent overtravel.

e. Hydraulic jacks used in lift slab construction shall have a safety device which will cause the jacks to support the load in any position if the jack malfunctions.

27.D.03 Jacking operations.

a. When it is necessary to provide a firm foundation, the base of the jack shall be blocked or cribbed; where there is a possibility of slippage of the metal cap of the jack, a wood block shall be placed between the cap and the load.

b. The maximum number of manually-controlled jacks on one slab shall be limited to fourteen, and in no event shall the number be too great to permit the operator to maintain the slab level within specific tolerances.

c. Jacking operations shall be synchronized to ensure even and uniform lifting of the slab.

d. During lifting, all points of the slab support shall be kept within 1.25 cm (0.5 in) of that needed to maintain the slab in a level position.

(1) If leveling is automatically controlled, a device shall be installed which will stop the operation when the 1.25 cm (0.5 in) leveling tolerance is exceeded.

(2) If leveling is manually controlled, such controls shall be located in a central location and attended by a trained operator while lifting is in progress.

e. No one shall be permitted under the slab during jacking operations.

27.E STRUCTURAL STEEL ASSEMBLY

27.E.01 Material and equipment.

a. Impact wrenches shall have a locking device for retaining the socket.

b. Containers shall be provided for storing or carrying rivets, bolts, and drift pins, and secured against accidental displacement when aloft.

c. A safety wire shall be properly installed on the snap and on the handle of the pneumatic riveting hammer and shall be used at all times: the wire size shall be not less than No. 9 (B&S gauge), leaving the handle and annealed No. 14 on the snap or equivalent.

27.E.02 Structural and reinforcing steel for walls, piers, columns, and similar vertical structures shall be guyed and supported to prevent collapse.

27.E.03 During the final placing of solid web structural members, the load shall not be released from the hoisting line until the members are secured with not less than two bolts or 10% of the bolts, whichever is greater, at each connection, drawn up wrench tight.

27.E.04 Open web steel joists shall not be placed on any structural steel framework until the framework is permanently bolted or welded.

a. No loading shall be placed upon steel joists until all bridging is completely and permanently installed.

b. For individual joists, the hoisting cables shall not be removed until sufficient top and bottom chord bridging is attached to provide lateral restraint.

27.E.05 Lateral bracing.

a. In steel framing, where bar joists are used and columns are not framed in at least two directions with structural steel members, a bar joist shall be field-bolted at columns to provide lateral stability during construction.

b. Where longspan joists or trusses, 12 m (40 ft) or longer, are used, a center row of bolted bridging shall be installed to provide lateral stability during construction prior to slacking of hoisting line.

c. No load shall be placed on open web steel joists until the stability requirements of 27.E.03 are met.

27.E.06 Workers shall be provided fall protection whenever they are exposed to falls of 1.8 m (6 ft) or more. ***> See Section 21***

27.E.07 Riveting shall not be done near combustible material unless precautions are taken to prevent fire.

27.E.08 When bolts, drift pins, or rivets are being knocked out, they shall be kept from falling.

27.F FLOORING

27.F.01 Temporary flooring - skeleton steel erection.

a. Derrick or erection floors shall be planked or decked over their entire surface except for access openings.

b. On structures not adaptable to temporary floors, and where scaffolds or personnel lifting platforms are not used, safety nets shall be installed and maintained whenever the potential fall distance exceeds two stories or 7.5 m (25 ft). ***> See Section 21.C***

c. Temporary flooring shall be maintained within two stories or 9 m (30 ft), whichever is less, below and directly under that portion of each tier of beams on which any work is being performed, except:

(1) when removing temporary flooring on a lower floor in preparation for transfer to an upper floor, or
(2) where such a floor is not practical, in which case safety nets shall be used.

d. The design of temporary flooring shall be approved by a registered engineer.

e. Planking or metal decking shall be of sufficient strength and thickness to carry the working load: planking shall be not less than 5 cm (2 in) thick (full size undressed).

f. Planking and metal decking shall be laid tight and secured to prevent displacement.

g. A fall protection system, delineated in an activity hazard analysis and accepted by the designated authority, shall be provided for employees placing and removing temporary flooring.

27.F.02 Permanent flooring - skeleton steel erection.

a. Permanent floors shall be installed as the erection of structural members progresses.

b. There shall be not more than eight stories between the erection floor and the uppermost permanent floor, except where the structural integrity is maintained by design.

c. At no time shall there be more than two floors or 9 m (30 ft) of unfinished bolting or welding above the foundation or uppermost permanently secured floor unless the column is one continuous member and approval has been obtained from the designated authority: in no case shall 4 floors or 15 m (48 ft) be exceeded.

27.F.03 Flooring - other construction.

a. In the erection of a building having double wood floor construction, the rough flooring shall be completed as the building progresses, including the tier below the one on which floor joists are being installed.

b. In the erection of a building having a single wood floor or other flooring systems, the floor immediately below the story where the floor joists are being installed shall be kept planked or decked over.

27.F.04 After a temporary working floor is provided, a safety line of 1.25 cm (0.5 in) wire rope or the equivalent shall be installed around the periphery of all temporary-planked or metal-decked floors with a fall potential of 1.8 m (6 ft) or more.

a. The line shall be installed approximately 105 cm (42 in) above the working floor and shall be flagged to provide visibility.

b. The line shall be attached to all perimeter columns and kept taut by use of a turnbuckle or other means.

c. The line shall remain in place until it is replaced by walls or standard guardrails.

27.G MASONRY CONSTRUCTION

27.G.01 A limited access zone shall be established whenever a masonry wall is being constructed. The limited access zone shall conform to the following.

a. The limited access zone shall be established prior to the start of construction on the wall.

b. The limited access zone shall be equal to the height of the wall to be constructed plus 1.2 m (4 ft), and shall run the entire length of the wall.

c. The limited access zone shall be established on the side of the wall which will be unscaffolded.

d. The limited access zone shall be restricted to entry by employees actively engaged in constructing the wall; no other employees shall be permitted to enter the zone.

e. The limited access zone shall remain in place until the wall is adequately supported to prevent overturning and to prevent collapse unless the height of the wall is over 2.4 m (8 ft), in which case the limited access zone shall remain in place until the requirements of 27.G.02 have been met.

27.G.02 All masonry walls over 2.4 m (8 ft) in height shall be adequately braced to prevent overturning and to prevent collapse unless the wall is adequately supported so that it will not overturn or collapse. The bracing shall remain in place until permanent supporting elements of the structure are in place.

27.G.03 Scaffolds for masonry construction workers shall not be used to provide temporary lateral support of masonry walls.

27.G.04 Cleanouts shall be on the side of the masonry wall opposite to the scaffolding.

27.G.05 Fall protection shall be provided to masonry workers exposed to falls of 6 feet or more. ***> See Section 21***

27.H ROOFING

27.H.01 Fall protection requirements.

a. In the construction, maintenance, repair, and demolition, of roofs, fall protection systems shall be provided which will prevent personnel from slipping and falling from the roof and prevent personnel on lower levels from being struck by falling objects. ***> See Section 21***

b. Employees engaged in the construction, maintenance, or repair of built-up roofing (but not construction of the roof deck) on roofs having a slope less than or equal to four vertical to twelve horizontal and edges 1.8 m (6 ft) or more above lower levels, shall be protected from falling by one of the following: guardrail systems; safety net systems; personnel fall arrest systems; or warning line system combined with guardrail, safety net, personnel fall arrest, or safety monitoring system.

27.H.02 On all roofs greater than 4.8 m (16 ft) in height, a hoisting device, stairways, or progressive platforms shall be furnished for supplying materials and equipment.

27.H.03 Roofing materials and accessories which could be moved by the wind, including metal roofing panels, which are on the roof and unattached shall be secured when wind speeds are greater than, or are anticipated to exceed, 15 km/h (10 mph).

27.H.04 Level, guarded platforms shall be provided at the landing area on the roof.

27.H.05 Crawling boards

a. Crawling boards shall be not less than 25 cm (10 in) wide and 2.5 cm (1 in) thick, having cleats 2.5 cm x 3.75 cm (1 in x 1.5 in).

b. Cleats shall be equal in length to the width of the board and

spaced at equal intervals not to exceed 60 cm (24 in).

c. Nails shall be driven through and clinched on the underside.

d. Crawling boards shall be secured and extend from the ridge pole to the eaves when used with roof construction, repairs, or maintenance.

e. A firmly fastened lifeline of at least 2 cm (0.75 in) diameter rope, or equivalent, shall be strung beside each crawling board for a handhold.

27.H.06 Roofing brackets.

a. Roofing brackets shall be secured by nailing in addition to the pointed metal projections.

b. When it is impractical to nail brackets, rope supports shall be used. When rope supports are used, they shall consist of first-grade manila rope, 2 cm (0.75 in) diameter or equivalent.

27.H.07 When their use is permitted, warning line systems shall comply with the following:

a. Warning lines shall be erected around all sides of the work area.

(1) When mechanical equipment is not being used, the warning line shall be erected not less than 1.8 m (6 ft) from the roof edge.

(2) When mechanical equipment is being used the warning line shall be erected not less than 1.8 m (6 ft) from the roof edge which is parallel to the direction of mechanical equipment operation and not less than 3 m (10 ft) from the roof edge which is perpendicular to the direction of mechanical equipment operation.

b. Warning lines shall consist of ropes, wires, or chains, and supporting stanchions erected as follows:

(1) The rope, wire, or chain shall be flagged at not more than 1.8 m (6 ft) intervals with high visibility material.

(2) The rope, chain, or wire shall be rigged and supported in such a way that its lowest point (including sag) is no less than 85 cm (34 in) from the roof surface and its highest point no more than 100 cm (39 in) from the roof surface.

(3) After being erected, with the rope, wire, or chain attached, stanchions shall be capable of resisting, without tipping over, a force of at least 7 kg (16 lb) applied horizontally against the stanchion 75 cm (30 in) above the walking/working surface, perpendicular to the warning line, and in the direction of the roof, floor, or platform edge.

(4) The rope, wire, or chain shall have a minimum tensile strength of 230 kg (500 lb), and after being attached to the stanchions shall be capable of supporting, without breaking, the loads applied to the stanchions (as described in (3)).

(5) The lines shall be attached at each stanchion in such a way that pulling on one section of the line between stanchions will not result in slack being taken up in adjacent sections before the stanchion tips over.

(6) No employee shall be allowed in the area between a roof edge and a warning line unless the employee is performing work in that area.

(7) Mechanical equipment on roofs shall be used or stored only in areas where employees are protected by a warning line, guardrail, or personnel fall arrest system.

c. Access paths shall be erected as follows:

(1) points of access, materials handling areas and storage areas shall be connected to the work area by a clear access path formed by two warning lines.

(2) when the path to a point of access is not in use, a rope, wire, or chain, equal in strength and height to the warning line, shall be placed across the path at the point where the path intersects the warning line erected around the work area, or the path shall be offset such that a person cannot walk directly into the work area.

27.H.08 Employees working in a roof-edge materials handling or storage area located on a roof having a slope less than or equal to four vertical to twelve horizontal and with edges 1.8 m (6 ft) or more above lower levels shall be protected by the use of a guardrail, safety net, or personal fall arrest system along all unprotected roof sides and edges of the area.

a. When guardrails are used at hoisting areas, a minimum of 1.2 m (4 ft) of guardrail shall be erected on each side of the access point through which materials are hoisted.

b. A chain or gate shall be placed across the opening between the guardrail sections when hoisting operations are not taking place.

c. When guardrails are used at bitumen pipe outlets, a minimum of 1.2 m (4 ft) of guardrail shall be erected on each side of the pipe.

d. When personal fall arrest systems are used they shall not be attached to the hoist.

e. When personal fall arrest systems are used they shall be rigged to allow the movement of employees only as far as the roof edge.

f. Materials may not be stored within 1.8 m (6 ft) of the roof

edge unless guardrails are erected at the roof edge.

g. Materials which are to be piled, stacked, or grouped shall be stable and self-supporting.

DEFINITIONS

Built-up roofing: a weather-proofing cover, applied over roof decks, consisting of either a liquid-applied system, a single-ply system, or a multiple-ply system.

Bull float: a tool comprising a large, flat, rectangular piece of wood, aluminum, or magnesium, with a handle, used to smooth uniform surfaces of freshly placed concrete.

Double-wood floor construction: a system in which a second layer of wooden flooring is placed upon a layer of rough wooden flooring.

Eaves: the bottom edges of a sloping roof.

Formwork: the total system of support for freshly placed or partially cured concrete, including the mold or sheathing (form) that contacts the concrete and all supporting members, including shores, reshores, hardware, and bracing.

Lift-slab: a method of concrete construction in which floor and roof slabs are cast at or on the ground level and, using jacks, lifted into position.

Limited access zone: an area alongside a masonry wall which is clearly demarcated to limit access by employees.

Post-tensioning: a method of pre-stressing concrete with tendons that are tensioned after the concrete has hardened.

Precast concrete: concrete members (such as walls, panels, slabs, columns, and beams) which have been formed, cast, and

cured prior to final placement in a structure.

Reshoring: the construction operation in which shoring equipment (also called reshores or reshoring equipment) is placed, as the original forms and shores are removed, in order to support partially cured concrete and construction loads.

Ridge pole: the longitudinal board, set on end, which is tied to the upper ends of roof trusses.

Roofing bracket: a bracket fastened to the roof or supported by ropes fastened over the ridge of the roof and secured to a suitable structural member,

Safety monitoring system: a safety system in which a competent person monitors the safety of all employees in a roofing crew and warns them when it appears to the monitor that they are unaware of the hazard or are acting in an unsafe manner. This competent person must be on the same roof as and within visual sighting distance of the employees and must be close enough to verbally communicate with the workers.

Shoring: a supporting member that resists a compressive force imposed by a load.

Shore head: a horizontal member fastened atop vertical shoring.

Sill: a horizontal member placed on the foundation and upon which shores are supported.

Tremie: a pipe or tube through which concrete is placed under water.

Troweling machine: a device utilizing rotating trowels on radial arms and used in concrete finishing operations.

Vertical slip forms: forms which are jacked vertically during the placement of concrete.

SECTION 28

HAZARDOUS, TOXIC, AND RADIOACTIVE WASTE (HTRW) AND UNDERGROUND STORAGE TANK (UST) ACTIVITIES

28.A GENERAL

28.A.01 The requirements in this section apply to:

a. clean-up operations, including initial investigations and assessments and underground tank removal, involving hazardous, toxic, and radioactive waste (HTRW) activities, and
b. emergency operations in response to releases of hazardous substances at HTRW sites.

28.A.02 Hazard evaluation and control.

a. HTRW activities shall be evaluated to identify hazards specific to the activity and to determine procedures appropriate for controlling employee exposure to those hazards. ***> See Section 28.C***

b. Control procedures shall be implemented prior to initiating site activities.

28.A.03 Employees who will be working on an HTRW activity shall be informed of any risks that have been identified.

a. Any information concerning the chemical, physical, or toxicological properties of each substance known or suspected to be present on site that is available to the employer and relevant to the duties an employee is expected to perform, shall be made available to the affected employees prior to the commencement of their work activities. Any MSDS developed for hazard communication may also be used.

b. An information program shall be developed and implemented to inform personnel engaged in hazardous

waste activities of the nature, level, and degree of exposure likely because of participation in such activities and the hazards of, and controls for, those exposures. This information program shall be part of the safety and health program (SHP).

c. Contractors and subcontractors shall inform all employees engaged in HTRW activities of:

(1) any potential safety, health, fire, explosion, or other hazard of the activity:
(2) applicable requirements of the safety and health program; and
(3) emergency response procedures.

28.A.04 Training. ***> See Section 28.D***

a. All employees working on an HTRW activity, and their supervisors and management responsible for the activity, shall receive training before they are allowed to engage in HTRW activities that could expose them to hazardous substances or safety or health hazards.

b. Personnel are prohibited from participating in, or in the on-site supervision of, HTRW activities unless they have been certified as having successfully completed the training to a level required by their position function and responsibilities.

28.A.05 Pre-entry briefings shall be held for employees prior to their initiating any new or differing site activity and at such other times as necessary to ensure that employees are knowledgeable of the site-specific safety and health plan (SSHP) and activity hazard analysis and that the plan and analysis are being followed. ***> Briefings shall be documented per 01.B.03b***

28.A.06 Medical surveillance shall be conducted in accordance with the requirements delineated in Appendix K; employees included in medical surveillance shall maintain documentation, in their possession or otherwise on site, of current medical status

while they are engaged in site activities.

28.A.07 Inspections.

a. Inspections shall be conducted by the Site Safety and Health Supervisor or, in the absence of that individual, another individual who is knowledgeable in occupational safety and health, acting on the behalf of the employer as necessary to determine the effectiveness of the SSHP. ***> See Section 01.A for inspection requirements***

b. Deficiencies in the implementation or effectiveness of the SSHP shall be brought to the attention of the employer for correction.

28.A.08 Prior to initiating excavation, subsurface exploration shall be used to determine the location and depth of drums. Subsurface exploration shall not create additional hazards nor present a hazard to subsurface drums: the use of non-intrusive techniques shall be taken into consideration.

28.A.09 Drums and containers used during hazardous waste clean-up shall meet the appropriate DOT, OSHA, and EPA requirements.

28.A.10 Emergency operations.

a. Emergency operations involving hazardous, toxic, or radioactive waste conducted at USACE facilities shall be conducted in accordance with 29 CFR 1910.120(q).

b. Prior to performing emergency operations, all persons shall have successfully completed training specified in 29 CFR 1910.120(q)(6) to a level required by their position functions and responsibilities.

28.B SAFETY AND HEALTH PROGRAM

28.B.01 When employees are engaged in HTRW activities (including preliminary assessments and underground tank work) a safety and health program shall be developed and implemented; existing written SHPs are acceptable if they are modified to cover the criteria in Table 28-1. ***> See Table 28-1***

a. The SHP shall cover the items listed in Table 28-1 and provide for the identification, evaluation, and control of safety and health hazards and provide for emergency response for HTRW activities.

b. SHPs and SSHPs shall have a cover sheet for the names, titles, and signatures of the qualified competent persons assigned by the employer to develop and review them: a SHP or SSHP will not be considered to have been reviewed or accepted unless this cover sheet has all of the necessary signatures.

c. For government operations, the SSHP shall be made available to all contractor and subcontractor employees.

d. For contract activities, the prime contractor shall integrate all subcontractor work activities into the SSHP, make the SSHP available to all contractor and subcontractor employees, and ensure all subcontractors integrate provisions of the SSHP in their work activities.

e. The SSHP shall be reviewed and updated as necessary in order to keep it current and effective.

f. A project SSHP may be considered to satisfy the requirement for an accident prevention plan if the SHP covers all of the elements required of an accident prevention plan. ***> See Section 01.A***

28.B.02 A site control program (included in the SSHP portion of

TABLE 28-1

SAFETY AND HEALTH PROGRAM OUTLINE REQUIREMENTS

1. Organizational structure. Establishes the safety and health policy for the project; specifies the lines of authority and the overall responsibilities of employees, management, and supervisors; details the means, lines, and procedures for communication; outlines requirements for safety and health inspections, safety and health meetings, and accident investigating and reporting. In addition, identifies:
   a. The general supervisor who has the responsibility and authority to direct all hazardous waste operations,
   b. The site safety and health officer who has the responsibility and authority to develop and implement the site-specific safety and health plan and verify compliance, and
   c. Other personnel needed for the safety and health of HTRW operations and emergency response, specifying their general functions and responsibilities.

2. Comprehensive workplan. Defines work tasks and objectives of the site activities; identifies the methods, logistics, and resources for accomplishing those tasks and objectives; and establishes personnel requirements for implementing the comprehensive workplan.

3. Site-specific safety and health plan (SSHP). Addresses the safety and health hazards of each phase of site activity and the procedures for their control. The SSHP is developed from information obtained during site characterization and analysis and addresses the following:
   a. Safety and health risk or hazard analysis for each site task and operation delineated in the workplan,
   b. Employee training assignments,
   c. Personnel protective equipment program (including personal protective equipment requirements for site activities) and decontamination procedures,
   d. Medical surveillance requirements,
   e. Frequency and type of air monitoring, personnel monitoring, and environmental sampling techniques and instrumentation to be used, including methods of maintenance and calibration,
   f. Emergency response plan, including necessary personal protective equipment,
   g. Confined space entry procedures,
   h. Spill containment program, and
   I. Site control program.

the SHP) shall be developed during the planning stages of HTRW clean-up activities and modified as necessary when new information becomes available. As a minimum, the site control program shall include:

a. a site map and site work zones;
b. requirements for use of the buddy system;
c. requirements for site communications, including alert means for emergencies;
d. standing operating procedures and safe work practices (safe work practices shall be in the form of an activity hazard analysis);
e. identification and phone numbers of the nearest emergency assistance; and
f. site security procedures.

28.C. SITE CHARACTERIZATION AND ANALYSIS AND INITIAL SITE ENTRY

28.C.01 Preliminary evaluation.

a. A preliminary evaluation of a site's characteristics and hazards shall be conducted by a qualified person prior to site entry in order to determine the appropriate safety and health controls.

b. The following information, to the extent available, shall be obtained prior to allowing employees to enter a site and shall be included in this evaluation;

(1) location and approximate size of the site;
(2) description of the response activities and/or position tasks to be performed and the duration of planned employee activities;
(3) site topography and accessibility by air and roads;
(4) safety and health hazards anticipated at the site and their chemical and physical properties;
(5) pathways for hazardous substance dispersion; and
(6) present status and capabilities of emergency response teams that would provide assistance to HTRW site employees,

the names and responsibilities of team members and leaders, and the procedures for contacting the team.

28.C.02 Detailed evaluation.

a. Immediately following initial site entry, a detailed evaluation of the site-specific hazards shall be performed by a qualified person.

b. The results of the detailed evaluation shall be used to verify the preliminary evaluation, to further identify existing site hazards, and to determine appropriate safety and health controls for the activities to be performed.

28.C.03 Hazard Identification.

a. All suspected conditions that may pose inhalation or skin absorption hazards that are IDLH, and any other condition that could cause death of serious harm, shall be identified during the preliminary survey and analyzed in the detailed evaluations.

b. Once the presence and concentrations of specific hazardous substances and health hazards have been established, the risks associated with these substances shall be identified and controls appropriate for the hazards shall be determined and implemented. ***> See 28.A.03***

28.C.04 PPE shall be provided and used during initial site entry.

a. Personal protective equipment shall provide protection to a level of exposure below permissible exposure limits and published exposure levels for known or suspected hazardous substances and health hazards, and which will provide protection against other known and suspected hazards identified during the preliminary evaluation. (If a hazard does not have a permissible exposure limit or published exposure level, other published guidelines and information may be used as a guide to appropriate personal protective equipment.)

b. If positive-pressure self-contained breathing apparatus is not used as part of the entry ensemble, and if respiratory protection is warranted by the potential hazards identified during the preliminary evaluation, an escape self-contained breathing apparatus of at least five minutes duration shall be carried by each employee during initial site entry.

c. If the preliminary evaluation does not produce sufficient information to identify the hazards or suspected hazards at the site, an ensemble providing protection equivalent to Level B personal protective equipment shall be used for minimum protection and direct reading instruments shall be used as appropriate for identifying IDLH conditions.

28.C.05 Monitoring.

a. During initial site entry, the following monitoring shall be conducted when the preliminary evaluation indicates the potential for ionizing radiation or IDLH conditions or when the preliminary evaluation does not produce sufficient information to reasonably eliminate the possibility of these conditions:

(1) monitoring with direct reading instruments for hazardous levels of ionizing radiation,
(2) air monitoring with appropriate direct reading test equipment for IDLH conditions, or
(3) visually observing for signs of actual or potential IDLH or other hazardous conditions.

b. An on-going air monitoring program shall be implemented after site characterization has determined the site is safe for start up of activities. ***> See Section 28.F***

28.D TRAINING

28.D.01 All personnel performing on-site work activities in which they may be exposed to safety or health hazards resulting from hazardous waste operations shall have completed applicable

training in compliance with 29 CFR 1910.120(e).

a. Training shall be conducted by instructors who meet trainer qualifications of 1910.120(e)(5).

b. Each employee successfully completing their training and field experience specified shall be certified as having successfully completed the necessary training and shall maintain a copy of the written certification at the project site.

28.D.02 Prior to conducting on-site HTRW activities, all USACE and contractor personnel shall successfully complete a 40-hour HTRW safety and health training course to be followed by an 8-hour annual refresher and/or 8-hour supervisors course as mandated in 29 CFR 1910.120(e).

28.D.03 Site-specific training. Employees shall be trained in the following:

a. names of personnel and alternates responsible for site safety and health;
b. safety, health, and other hazards present on site;
c. use of personal protective equipment;
d. work practices by which the employee can minimize risks from hazards;
e. safe use of engineering controls and equipment on the site;
f. medical surveillance requirements, including recognition of symptoms and signs indicative of overexposure to hazards;
g. decontamination procedures;
h. emergency response plan, including the necessary personal protective equipment and other equipment;
I. confined space entry procedures; and
j. spill containment program.

28.D.04 Employees who are engaged in responding to hazardous emergency situations at HTRW sites that may expose them to hazardous substances shall be trained and drilled in responding to such emergencies. The frequency of training and

drills shall be such that the employees maintain knowledge of and proficiency in the emergency response procedures.

28.E PERSONAL PROTECTIVE EQUIPMENT

28.E.01 A personal protective equipment program shall be developed as part of the SSHP. The program shall address:

a. personal protective equipment selection based on site-specific hazards,
b. the use and limitations of personal protective equipment,
c. HTRW activity duration,
d. maintenance and storage of personal protective equipment,
e. decontamination and disposal of personal protective equipment,
f. personal protective equipment training and fitting,
g. equipment donning and doffing procedures,
h. procedures for inspecting equipment before, during, and after use,
I. evaluation of the effectiveness of the personal protective equipment program, and
j. medical considerations, including work limitations due to temperature extremes.

28.E.02 Personal protective equipment selection shall be based on the performance characteristics of the equipment relative to:

a. the requirements and limitations of the site,
b. the task-specific conditions and duration, and
c. the hazards and potential hazards identified at the site.

> See Section 5.E personal protective equipment requirements and Appendix L for description of levels of protection

28.E.03 The level of protection provided by personal protective equipment shall be increased when additional information on site conditions indicates that increased protection is necessary to

reduce exposure below permissible exposure limits or published exposure levels for hazardous substances and health hazards.

28.F MONITORING AND SAMPLING

28.F.01 A monitoring and sampling program shall be established as part of the SSHP. The program shall identify:

a. the frequency and types of personnel and air monitoring and environmental sampling techniques and instrumentation to be used, and
b. methods of maintenance and calibration of monitoring and sampling equipment.

28.F.02 Initial and periodic monitoring.

a. Upon initial site entry, representative air monitoring shall be conducted to identify any IDLH condition, exposure above permissible exposure limits or published exposure levels, exposure over a radioactive material's dose limits, or other dangerous conditions.

b. Periodic monitoring shall be conducted when the possibility of an IDLH condition or flammable atmosphere has developed, there is indication that exposure may have risen above permissible exposure limits or published exposure levels since prior monitoring, or for the following situations:

(1) when work begins on a different portion of the site,
(2) when contaminants other than those previously identified are being handled,
(3) when a different type of activity is initiated, or
(4) when employees are handling leaking drums or containers or working in areas with obvious liquid contamination.

28.F.03 Monitoring high-risk employees.

a. After commencement of HTRW activities, the employer shall

monitor those employees likely to have the highest exposures to hazardous substances and health hazards likely to be present above permissible exposure levels by using personal sampling frequently enough to characterize employee exposures.

b. If the employees likely to have the highest exposure are over permissible exposure limits or published exposure limits, then monitoring shall continue to determine all employees likely to be above those limits.

c. The employer may use a representative sampling approach by documenting that the employees and chemicals chosen for monitoring are based on the criteria stated above. This requirement does not apply to employees engaged in site characterization activities covered by Section 28.C.

28.G UNDERGROUND STORAGE TANK REMOVAL

28.G.01 Prior to initiating the removal or disposal of an underground storage tank (UST) system, information required by 28.A.03 shall be provided to employees. Such information shall be used to select sampling techniques to verify the contents of the tank.

28.G.02 Sampling data shall be used to assess the hazards of the contents and determine controls appropriate for those hazards.

28.G.03 The removal or disposal of UST systems which contained petroleum or other hazardous substances shall be in accordance with the procedures of American Petroleum Institute (API) Recommended Practice 1604, Removal and Disposal of Used Underground Petroleum Storage Tanks. A copy of this publication will be used in developing the hazard analyses for UST system removal/disposal activities and shall be available at the job site.

28.G.04 Hazard analyses for the removal or disposal of an

underground storage tank (UST) system shall address the following:

a. hazards of UST system contents and procedures for hazard control, to include explosion prevention;
b. monitoring requirements and procedures;
c. UST system draining, purging, and cleaning procedures;
d. excavation safety requirements and procedures for blocking free-standing tanks;
e. procedures and safety precautions for disassembly, removal, and disposal of system; and
f. spill contingency planning.

28.H HANDLING DRUMS AND CONTAINERS

28.H.01 The handling of HTRW drums and containers shall be kept to the minimum necessary for:

a. responding to problems which may affect safety and health,
b. unstacking and orienting drums and containers for sampling, or
c. organizing drums and containers in staging areas to facilitate characterization and remedial actions.

28.H.02 Site activities shall be organized to minimize the amount of drums or container movement.

28.H.03 Identification and inspection.

a. Prior to handling or opening a drum or other container, efforts shall be made to identify their contents.

b. Drums and containers shall be inspected and their integrity shall be assured prior to being moved.

c. Drums or containers that cannot be inspected before being moved because of storage conditions (e.g., buried beneath the earth, stacked behind other drums, stacked several tiers high in

a pile, etc.) shall be moved to an accessible location and inspected prior to further handling.

d. Unlabeled drums and containers shall be considered to contain hazardous substances and handled accordingly until the contents are positively identified and labeled.

28.H.04 Handling requirements.

a. Prior to movement of drums or containers, all employees exposed to the transfer operation shall be warned of the potential hazards associated with the contents of the drums or containers and their handling and instructed to minimize handling as much as possible.

b. Where major spills may occur, a spill containment program shall be implemented to contain and isolate the entire volume of the hazardous substance being transferred: USDOT specified salvage drums or containers and suitable quantities of proper absorbent shall be kept available and used in areas where spills, leaks, or ruptures may occur.

c. Drums and containers that cannot be moved without rupture, leakage, or spillage shall be emptied into a sound container using a device classified for the material being transferred.

d. Subsurface exploration shall be used to estimate the location and depth of buried drums or containers; soil or covering material shall be removed with caution to prevent drum or container rupture. ***> See 28.A.08***

28.H.05 Opening drums or containers.

a. Where an airline respirator system is used, connections to the source of air supply shall be protected from contamination and the entire system protected from physical damage.

b. Employees not involved in opening drums or containers shall be kept a safe distance from the drums or containers being opened.

c. If employees must work near or adjacent to drums or containers being opened, a suitable shield that does not interfere with the work operation shall be placed between the employee and the drums or containers being opened to protect the employees in case of an accidental explosion.

d. Controls for drum or container opening equipment, monitoring equipment, and fire suppression equipment shall be located behind the explosion-resistant barrier.

e. When there is a reasonable possibility of flammable atmospheres being present, material handling equipment and hand tools shall be of a type to prevent sources of ignition (e.g., non-sparking tools).

f. Drums and containers shall be opened in such a manner that excess interior pressure will be safely relieved, if pressure cannot be relieved from a remote location, appropriate shielding shall be placed between the employee and the drums or containers to reduce the risk of employee injury.

g. Employees shall not stand upon or work from drums or containers.

28.H.06 Material handling equipment used to transfer drums and containers shall be selected, positioned, and operated to minimize sources of ignition related to the equipment from igniting vapors released from drums or containers.

28.H.07 The following precautions shall be taken when drums or containers containing, or suspected of containing, shock sensitive waste are handled.

a. All non-essential employees shall be kept a safe distance

from the area of transfer.

b. Material handling equipment shall be provided with explosive containment devices or protective shields to protect equipment operators from exploding containers.

c. An employee alarm system, capable of being perceived above surrounding light and noise conditions, shall be used to signal the commencement and completion of explosive waste handling activities.

d. Continuous communications shall be maintained between the employee in charge of the immediate handling area and both the site safety and health supervisor and the command post until the handling operation in completed. Communication equipment or methods which could cause shock sensitive materials to explode shall not be used.

e. Drums and containers under pressure, as evidenced by bulging or swelling, shall not be moved until the cause for excess pressure is determined and appropriate containment procedures have been implemented to protect employees from explosive relief of the drum.

f. Drums and containers containing packaged laboratory wastes shall be considered to contain shock-sensitive or explosive materials until they have been characterized.

28.H.08 When handling laboratory waste packs, the following precautions shall be taken in addition to the requirements of paragraph 28.H.07f.

a. Lab packs shall be opened only when necessary and then only by an individual knowledgeable in the inspection, classification, and segregation of the containers within the pack according to the hazards of the wastes.

b. If crystalline material is noted on any container, the contents

shall be handled as a shock sensitive waste until the contents are identified.

28.H.09 Sampling of drum and container contents shall be done in accordance with a sampling procedure which is part of the site-specific safety and health plan.

28.H.10 Shipping and transport.

a. Drums and containers shall be identified and classified prior to packaging for shipment.

b. Drum or container staging areas shall be kept to the minimum number necessary to identify and classify materials safety and prepare them for transport.

c. Bulking of hazardous wastes shall be permitted only after a thorough characterization of the materials has been completed.

28.H.11 Tank and vault procedures.

a. Tanks and vaults containing hazardous substances shall be handled in a manner similar to that for drums and containers, taking into consideration the size of the tank or vault.

b. Entry into tanks or vaults shall be avoided if possible. When entry is required, appropriate tank or vault entry procedures as described by the site-specific safety and health plan shall be followed.

28.I DECONTAMINATION

28.I.01 Procedures for all phases of decontamination shall be developed, communicated to all employees, and implemented before any employee or equipment may enter areas on a site where potential exposure to hazardous substances exists. Decontamination procedures shall specify:

a. decontamination methods and procedures for testing and evaluating their effectiveness,
b. the number and layout of decontamination stations and the decontamination equipment needed,
c. procedures to prevent contamination of clean areas and to minimize employee contact with hazardous substances or with equipment that has contacted hazardous substances,
d. procedures to be taken if the non-impermeable clothing of an employee becomes wetted with hazardous substances,
e. methods for disposing of clothing and equipment that are not completely decontaminated, and
f. methods for disposing of decontamination water and waste.

28.I.02 All employees leaving a contaminated area shall be decontaminated; all contaminated clothing and equipment leaving a contaminated area shall be appropriately disposed of or decontaminated.

28.I.03 Decontamination procedures shall be monitored by the site safety and health coordinator to determine their effectiveness: when such procedures are found to be ineffective, site work shall immediately cease and remain shut down until the situation is correct.

28.I.04 Decontamination shall be conducted in geographical areas that will minimize the exposure of uncontaminated employees and equipment to contaminated employees or equipment.

28.I.05 All equipment and solvents used for decontamination shall be decontaminated or disposed of property.

28.I.06 Personal protective equipment.

a. Personal protective equipment shall be decontaminated, cleaned, laundered, maintained, or replaced as needed to maintain their effectiveness.

b. Unauthorized employees shall not remove protective equipment from change rooms.

c. Commercial laundries or cleaning establishments that decontaminate protective clothing or equipment shall be informed of the potential harmful effects of exposures to hazardous substances.

28.I.07 Where the decontamination procedure indicates the need for regular showers and change rooms outside a contaminated area, or if clean-up or removal operations will require six months or more to complete, showers and change rooms shall be provided and meet the requirements of Section 2: if temperature effects prevent the use of water, then other effective means for cleansing shall be provided and used.

28.J EMERGENCY RESPONSE

28.J.01 Emergency response plan.

a. An emergency response plan shall be developed and implemented to handle anticipated emergencies prior to the commencement of hazardous waste activities.

b. The plan shall be in writing and shall be available for inspection and copying.

c. If the employees on a hazardous waste site are to be evacuated from the danger zone when an emergency occurs and are not permitted to assist in handling the emergency, an emergency plan, meeting the requirements of Section 01.E, may be used in lieu of an emergency response plan.

28.J.02 The emergency response plan shall address, as a minimum, the following:

a. pre-emergency planning,
b. personnel roles, lines of authority, and communication,

c. emergency recognition and prevention,
d. safe distances and staging areas (safety zones),
e. site security and control,
f. evacuation routes and procedures,
g. decontamination procedures which are not covered by the site-specific safety and health plan,
h. emergency medical treatment and first aid,
I. emergency alerting and response procedures,
j. critique of response and follow-up, and
k. personal protective and emergency equipment,
l. site topography, layout, and prevailing wind conditions, and
m. procedures for reporting incidents to federal, state, and local governments.

28.J.03 The emergency response plan shall be a separate section of the SSHP.

28.J.04 The emergency response plan shall be compatible and integrated with the disaster, fire, and emergency response plans of local, state, and federal agencies or, for work conducted on DOD installations, the installation.

28.J.05 The emergency response plan shall be rehearsed regularly as part of the overall training program for site operations.
> See 28.D.04

28.J.06 The emergency response plan shall be reviewed periodically and, as necessary, amended to keep it current with new or changing site conditions or operations.

28.J.07 An employee alarm system shall be installed to notify employees of an emergency condition, to stop work activities - if necessary, to lower background noise in order to speed communications, and to begin emergency procedures.

28.J.08 Based on the information available at the time of the emergency, the incident and the site response capabilities shall be evaluated and appropriate steps taken to implement the site

emergency response plan.

28.K RESOURCE CONSERVATION AND RECOVERY ACT OPERATIONS

28.K.01 When Resource Conservation and Recovery Act (RCRA) operations are conducted at a treatment, storage, or disposal (TSD) facility, the following programs shall be developed and implemented.

a. a safety and health program, designed to identify, evaluate, and control safety and health hazards, per Section 28.B,
b. a hazard communication program per 29 CFR 1910.1200,
c. a medical surveillance program, per Appendix K,
d. a decontamination program, per Section 28.I, and
e. a safety and health training program, per paragraph 28.K.02.

28.K.02 Employees exposed to health hazard or hazardous substances at TSD operations shall be trained to enable them to perform their assigned duties and function in a safe and healthful manner: employees shall receive certificates documenting their successful completion of all required training and shall maintain a copy of this certification at the TSD.

a. All employees engaged in TSD operations shall have received a 24-hour initial training program covering the items delineated in paragraph 28.E.01.

b. All employees shall receive an 8-hour refresher training program annually.

c. All employees who assist in handling emergencies at the TSD shall receive annual training sufficient to certify the employees as knowledgeable of and proficient in the following:

(1) the recognition of safety and health hazards,
(2) safety and health control methods and equipment,

(3) the selection and use of personal protective equipment
(4) the emergency response plan,
(5) the activity hazard analyses for the emergency operations,
(6) coordination and communication procedures,
(7) the appropriate response in over-exposure to health hazards or injury, and
(8) the recognition of symptoms which may result from over-exposures to health hazards.

28.K.03 Drums and containers shall be handled in accordance with the requirements of Section 28.H.

28.K.04 Emergency response plans.

a. An emergency response plan shall be developed and implemented when employees are allowed to assist in handling an emergency at the TSD: if employees are to be evacuated from the worksite and not permitted to assist in handling emergencies, the emergency response plan is not required.

b. The emergency response plan shall cover those items specified in Section 28.J.

DEFINITIONS

Hazardous, Toxic, Radioactive Waste (HTRW) activity: refers to the overall project or worksite involving the investigation, assessment, or clean-up of HTRW or the emergency response to releases of hazardous substances, hazardous waste, or hazardous material as defined by 29 CFR 1910.120(a)(3) or 1926.65, at an HTRW site. Includes those activities undertaken for the EPA's Superfund program, the Defense Environmental Restoration Program (which also includes Formerly Used Defense Sites and Installation Restoration Program activities), HTRW actions associated with Civil Works projects, and HTRW projects of other government agencies. Such activities include, but are not limited to, preliminary assessments/site inspections;

remedial investigations; feasibility studies; engineering evaluations/cost analyses; RCRA facility investigations/corrective measures studies/corrective measures implementations/closure plans/Part B permits; or any other predesign investigations, remedial design, or remedial construction at known, suspected, or potential HTRW sites. Also includes activities conducted at containerized HTRW sites (leaking PCB transformers and leaking or suspected leaking underground storage tanks that contain hazardous substances).

Hazardous, Toxic, Radioactive Waste (HTRW) operation: refers to a specific function on an HTRW site, such as sampling, monitoring, excavation, drum removal, etc.

Hazardous, Toxic, Radioactive Waste (HTRW) site: any facility or location which (1) requires the planned or emergency clean-up of hazardous, toxic, radioactive waste, and (2) is designated as an uncontrolled hazardous waste site or covered by the Resource Conservation and Recovery Act.

Laboratory waste pack: a drum containing individual containers of laboratory materials normally surrounded by cushioning absorbent material.

Levels of protection: see Appendix L.

Overexposure: exposure to a safety or health hazard above the permissible exposure limits or, if there is no permissible exposure limit, above the published exposure levels for the hazard.

Pre-entry briefings: an information briefing given by the site safety and health supervisor to employees before their entry to an HTRW site and instructing employees in the contents of the site-specific safety and health plan.

Safety and health program: a written program which describes the worksite; the work activities; the hazards associated with the work activities and the means for their control; and the structure,

policies, and procedures of the organizations involved in the HTRW activities.

Site control procedures: procedures delineated in the site control program which will be used to minimize any potential contamination of workers, protect members of the public from the site's hazards, and prevent vandalism.

Site Safety and Health Supervisor: that individual on an HTRW site who is responsible to the employer and has the authority and knowledge necessary to implement the site-specific safety and health plan and verify compliance with safety and health requirements.

Site-specific safety and health plan (SSHP): a written plan which establishes policies and procedures for protecting workers and members of the public from the specific hazards of the HTRW site for which the plan was developed.

Site work zones: zones of differing work activities and hazards established to reduce the accidental spread of hazardous substances from a contaminated to an uncontaminated area and to control exposure of personnel to HTRW hazards. There are generally three categories of site work zones - (1) exclusion zones, where contamination does or could occur, (2) contamination-reduction zones, which are transition areas between contaminated areas and clean areas and where decontamination takes place, and (3) support zones, which are uncontaminated areas where administrative and support functions are located.

SECTION 29

BLASTING

29.A GENERAL

29.A.01 Prerequisites.

a. Permission in writing shall be obtained from the Government's designated authority before explosive materials are brought on the job site; periodic replenishment of approved supplies does not require written approval.

b. Prior to bringing explosives on site, the contractor shall develop a blasting safety plan. As a minimum, this plan shall be accepted by the Government's designated authority and include the following:

(1) list the names, qualifications, and responsibilities of personnel involved with explosives, and
(2) delineate the contractor's requirements for handling, transportation, and storage of explosives; loading procedures; safety signals; danger area clearance; methods for securing the site; vibration and damage control; post-blast inspection and misfire procedures; and post-blast ventilation requirements.

29.A.02 The transporting, handling, storage, and use of explosives, blasting agents, and blasting equipment shall be directed and supervised by a person of proven experience and ability in blasting operations: these activities shall be in accordance with the requirements of the manufacturers, the Institute of Makers of Explosives, and, where applicable, DOD explosives safety standards. ***> See Section 26.J***

29.A.03 All persons working with explosives shall be in good physical condition and be able to understand and give written and verbal orders.

29.A.04 Warning signs shall be provided at points of access to blasting area.

29.A.05 Operations involving the handling or use of explosive materials shall be discontinued and personnel moved to a safe area during the approach or progress of a thunderstorm or dust storm; controls will be established to prevent accidental discharge of electric blasting caps from extraneous electricity.

29.A.06 Blasting operations near overhead power lines, communications lines, utility services, or other structures shall not be carried on until the operators and/or owners have been notified and measures for safe control have been taken.

29.A.07 All loading and firing shall be directed and supervised by one designated person.

29.A.08 A positive system to detect and measure the probability of lightning or massive static electrical discharges shall be used.

29.A.09 Before adopting any system of electrical firing, a thorough survey shall be made for extraneous currents and all dangerous currents shall be eliminated before any holes are loaded.

29.A.10 Blasts using electric detonators shall be fired with an electric blasting machine or a properly designed power source.

a. Blasts using non-electric detonators shall be fired by a blasting machine or starting device prescribed by the manufacturer.

b. When blasting near radar or radio transmission facilities or near electrical energy sources where testing has shown that radio frequency (RF) energy or stray electrical current may present a hazard to electrical blasting, an approved non-electrical initiation system shall be employed.

c. When electric detonators are used, leg wires shall be short circuited (shunted) until connected into the circuit for firing.

29.A.11 Detonating cord shall be initiated by non-electric detonator (cap and fuse), electric detonator, shock tube detonator or gas initiated detonator in accordance with the manufacturer's recommendation.

29.A.12 Delay electric detonators, non-electric delay detonators, detonating cord connectors, or sequential blasting machines shall be used for all delayed blasts; the practice shall conform to the manufacturer's recommendations.

29.A.13 Blasting machines.

a. Blasting machines shall be operated, maintained, tested, and inspected as prescribed by the manufacturer.

b. Blasting machines shall be tested prior to use and periodically thereafter as prescribed by the manufacturer.

c. Blasting machines shall be secured and accessible only to the blaster; only the blaster shall connect the leading wire to the machine.

29.A.14 When energy for blasting is taken from power circuits, the voltage shall not exceed 550 volts; the wiring controlling arrangements shall conform to the following (see Figure 29-1):

a. The blasting switch shall be an ungrounded UL (or other nationally recognized testing laboratory) listed, enclosed, externally operated double-pole double-throw switch which, when locked in the open position, will shunt the firing lines.

b. A grounded switch shall be installed between the blasting switch and the power circuit at a distance not less than 4.5 m (15 ft) from the blasting switch.

FIGURE 29-1

POWER FIRING SYSTEMS

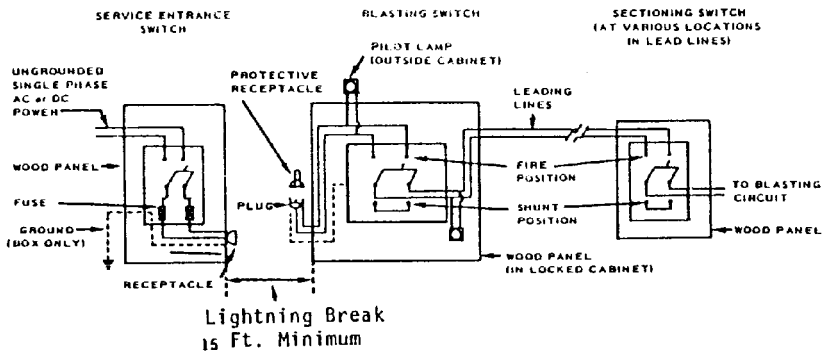

Power Firing System for Series and Parallel Series Firing (No Arcontroller)

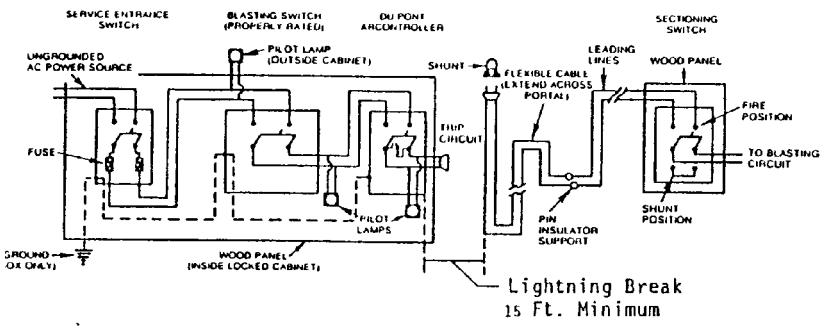

Recommended Installation of Shooting Station and Accessory Arrangement for Using Arcontroller

c. A lightning gap of at least 4.5 m (15 ft) shall be provided between the two switches; the gap connection shall be made by cable, plug and receptacle.

29.A.15 The cable between switches shall be disconnected and both switches shall be locked in the open position immediately after firing the shot.

29.A.16 Keys to the switches shall remain in the possession of the blaster at all times.

29.A.17 Insulated solid core wires of an appropriate gage in good condition shall be used for all lines.

29.A.18 Sufficient firing line shall be provided to permit the blaster to be located at a safe distance from the blast.

29.A.19 Mechanized equipment (including drills) shall not be operated within 15 m (50 ft) of a loaded hole.

29.A.20 The use of black powder shall be prohibited.

29.A.21 No explosive materials shall be abandoned.

29.A.22 All refuse from explosive loading such as empty boxes, paper, and fiber packing shall not be used again for any purpose, but shall be destroyed by burning at an approved location.

29.A.23 Storage of explosives.

a. The storage of explosives shall be in accordance with requirements of the Bureau of Alcohol, Tobacco and Firearms (as outlined in 27 CFR 55, Subpart K) or the state in which they are stored.

b. An accurate running inventory of all explosives and blasting agents stored at the project shall be maintained: two copies shall be maintained - one at the magazine and one in a facility

which is at least 50 feet from the magazine.

29.B TRANSPORTATION OF EXPLOSIVE MATERIALS

29.B.01 Transportation of explosives by the following modes shall be in accordance with the prescribed federal regulations and the applicable state requirements.

a. Transportation of explosive materials over public highways shall be in accordance with DOT requirements.

b. Marine transportation of explosive materials shall be in accordance with USCG requirements.

c. Transportation of explosive materials by aircraft shall be in accordance with FAA requirements.

29.B.02 Vehicles used for transportation of explosive materials shall not be loaded beyond their rated capacity and the explosive materials shall be secured to prevent shifting of load or dislodgment from the vehicle; when explosive materials are transported by a vehicle with an open body, a magazine or closed container shall be securely mounted on the bed to contain the cargo.

29.B.03 All vehicles transporting explosive materials shall display all placards, lettering, and/or numbering required by DOT.

29.B.04 Explosive materials and blasting supplies shall not be transported with other materials or cargoes; blasting caps (including electric) shall not be transported in the vehicle or conveyance with other explosives unless the conditions of 49 CFR 177.835(g) are met.

29.B.05 Personnel.

a. All vehicles for transportation of explosive materials shall be in the charge of and operated by a person who is physically fit,

careful, reliable, able to read and understand safety instructions, and not under the influence of intoxicants or narcotics.

b. Only the authorized driver and his or her helper shall be permitted to ride on any conveyance transporting explosive materials or detonators.

29.B.06 Vehicles used in the transportation of explosives shall be substantially constructed, in good repair, and shall have tight beds to prevent explosives from falling from the vehicle; the ends and sides of vehicles shall be high enough to prevent containers from falling off.

29.B.07 Explosives shall not be exposed to sparkling metal during transportation materials and all electric wiring completely protected and securely fastened to prevent short circuits; a written record of such inspection shall be kept on file.

29.B.12 Vehicles transporting explosive materials shall be operated with extreme care; full stops shall be made at approaches to all railroad crossings and main highways and the vehicles shall not proceed until it is known that the way is clear.

29.B.13 No vehicle shall be refueled while explosive materials are on the motor vehicle except in an emergency.

29.B.14 Persons employed in the transportation, handling, or other use of explosive materials shall not smoke or carry on their persons or in the vehicle, matches, firearms, ammunition, or flame-producing devices.

29.B.15 Provision shall be made for safe transfer of explosive materials to magazine vessels including substantial ramps or walkways free of tripping hazards.

29.B.16 Vehicles transporting explosive materials shall not be left unattended.

29.B.17 The hoist operator shall be notified before explosive materials are transported in a shaft conveyance.

29.B.18 Explosive materials shall be hoisted, lowered, or conveyed in a powder car; no other materials, supplies or equipment shall be transported in the same conveyance at the same time.

29.B.19 No person shall ride in any shaft conveyance transporting explosive materials; loading and unloading shall be accomplished only when the conveyance is stationary.

29.B.20 No explosive materials shall be transported on any locomotive; at least two car lengths shall separate the locomotive from the powder car.

29.B.21 No explosive materials shall be transported on a man haul trip.

29.B.22 The car or conveyance containing explosive materials shall be pulled, not pushed, whenever possible.

29.B.23 The powder car or conveyance built for transporting explosive materials shall bear a reflectorized sign with a sharply contrasting background on each side with the word **"EXPLOSIVES"** in letters not less than 10 cm (4 in) in height.

29.C HANDLING OF EXPLOSIVE MATERIALS

29.C.01 There shall be no smoking, open lights, or fire of any kind within 15 m (50 ft) of any area where explosives are being handled: no source of ignition, except necessary means to light fuses or fire electric detonators, shall be permitted in an area containing loaded holes.

29.C.02 Containers of explosive materials shall be opened only with non-sparking tools or instruments; metal slitters may be used for opening fiberboard boxes, paper bags or plastic tubes.

29.C.03 Explosive materials shall be removed from containers only as they are needed for immediate use.

29.C.04 Explosive materials and detonators or primers shall be separated and taken to the blasting area in original containers, Type 3 Magazines, or containers prescribed by 49 CFR 177.835.

29.C.05 Primers shall not be made up in excess of immediate need for holes to be loaded.

29.C.06 Primers shall not be made up in or near magazines or excessive quantities of explosive materials.

29.C.07 After loading of a blast is completed, all excess explosive materials and detonators shall be removed to a safe location or returned at once to the storage magazines, observing the same rules as when being conveyed to the blasting area.

29.C.08 The quantity of explosive materials taken to an underground loading area shall not exceed the amount estimated to be necessary for the blast.

29.C.09 Detonators and explosive materials shall be taken separately into pressure working chambers.

29.D ELECTROMAGNETIC RADIATION

29.D.01 Blasting operations or storage of electrical detonators shall be prohibited in vicinity of operating radio frequency (RF) transmitters or other RF producing devices except where the clearances in American National Standards Institute (ANSI) standard C95.4 can be maintained.

29.D.02 When necessary to perform blasting operations at a distance less than those shown in ANSI C95.4 tables, an approved non-electric initiation system shall be used.

29.D.03 Mobile radio transmitters, which are less than 100 feet

away from electric blasting caps in other than original containers, shall be deenergized and effectively locked, except in blasting areas where a non-electric initiation system as described in 29.A.10 is used.

29.E VIBRATION AND DAMAGE CONTROL

29.E.01 Blasting operations in or adjacent to cofferdams, piers, underwater structures, buildings, structures, or other facilities shall be carefully planned with full consideration for all forces and conditions involved.

29.E.02 Prior to initiation of vibration controlled blasting operations, a written plan for monitoring the operations shall be established.

29.E.03 When appropriate, owners, occupants, and the public shall be notified of the nature of blasting operations to be undertaken and controls to be established.

29.E.04 Where vibration damage may occur, energy ratios and peak particle velocities shall be limited in accordance with state requirements or the requirements in Table 29-1, whichever is more stringent. When any recording indicates either the energy ratio or peak particle velocity limits have been exceeded, blasting shall be suspended and the designated authority (Government and contractor) shall be immediately notified; blasting shall not be resumed until the probable cause has been determined and corrective measures taken.

29.E.05 Where required by state regulations, scaled distances shall be determined before each shot and included in the records: scaled distances shall not exceed limitations set by the state.

29.E.06 Air blast pressure exerted on structures resulting from blasting shall not exceed 133 db (0.013 psi).

TABLE 29-1

ENERGY RATIO AND PEAK PARTICLE VELOCITY FORMULAE

The maximum total energy ratio (ER) shall be limited to 1.0, calculated as follows: $ER = (3.29FA)^2$ where F = frequency in cycles per second A = amplitude in inches The total energy ratio is equal to the arithmetical sum of the energy ratios in the three mutually perpendicular planes of motion in the vertical and horizontal directions at any one instant of time.
The maximum total peak particle velocity (PV) shall be limited to 1.92, calculated as follows: $PV = A/t$ where A = amplitude in inches t = time in seconds The total peak particle velocity is equal to the vector sum of the particle velocities in three mutually perpendicular planes of motion in the vertical and horizontal directions at any one instant of time.

29.E.07 The monitoring, recording, and interpreting of vibrations shall be by qualified personnel: records and interpretations shall be furnished to the designated authority.

29.F DRILLING AND LOADING

29.F.01 All drill holes shall be sufficiently large to admit freely the insertion of the cartridges of explosives.

29.F.02 Drilling shall not be done in an area already blasted until remaining "bootlegs" are examined for unexploded charges and the total area has been examined to make sure that there are no unexploded charges remaining.

a. Never insert a drill, pick, or bar into bootlegs even if examination fails to disclose explosives.

b. When misfires have occurred and drilling must be done in an area where undetonated holes may exist, holes shall not be drilled where there is danger of intersecting a misfired hole.

c. All drilling necessary to neutralize misfires must be done under the supervision of a competent person who has a working knowledge of the explosive materials involved and is familiar with the conditions under which the misfired holes were drilled, loaded, primed, and initiated.

29.F.03 Drilling and loading operations shall not be carried on in the same area: drilling shall be separated from loaded holes by at least the depth of the loaded hole but in no case less than 15 m (50 ft).

29.F.04 No person shall be allowed to deepen drill holes that have contained explosives or blasting agents.

29.F.05 Holes shall not be drilled so that they disturb or intersect a loaded hole.

29.F.06 See Section 16.M for earth drilling requirements.

29.F.07 The loading or loaded area shall be kept free of any equipment, operations, or persons not essential to loading; no vehicle traffic shall be permitted over loaded holes; the blast site shall be guarded or barricaded and posted with danger signs to restrict unauthorized entry.

29.F.08 No holes shall be loaded except those to be fired in the next round of blasting; after loading, all remaining explosive materials and detonators shall be immediately returned to an authorized magazine; no explosive materials or loaded holes shall be left unattended at the blast site at any time.

29.F.09 Loading of sprung or jet-pierced holes shall be prohibited until it is established that the hole has cooled sufficiently to allow loading.

29.F.10 No explosive shall be loaded or used underground in the presence of combustible gases or combustible dusts unless the conditions of use have been thoroughly identified and accepted, in writing, as safe by a competent person qualified by a thorough knowledge of the factors to be evaluated or by the written permission of the authority having jurisdiction where an authority exercises jurisdiction.

29.F.11 Cartridges shall be primed only in the number required for a single round of blasting.

29.F.12 No detonator shall be inserted in explosive materials which do not have a cap well without first making a hole in the cartridge with a non sparking punch of proper size, or the appropriate pointed handle of a cap crimper.

29.F.13 Cartridges shall be seated by even steady pressure only.

29.F.14 Tamping shall be done with wood rods without exposed metal parts (non-sparking metal connectors may be used for joint

poles); an approved plastic tamping pole may also be used.

29.F.15 A borehole shall never be sprung when it is adjacent to or near a hole that is loaded; flashlight batteries shall never be used as a power source to replace a blasting machine when springing boreholes.

29.F.16 Use of detonating cord.

a. Detonating cord shall be handled and used with the same respect and care given other explosives: care shall be made to avoid damaging or severing cord during and after loading and hooking-up.

b. When using a detonating cord downline, after the primer is loaded in the hole, the detonating cord shall be cut from the supply reel before loading the rest of the charge.

c. Detonating cord connections shall be positive in accordance with recommended methods; knot or other cord-to-cord connections shall be made only with detonating cord in which the explosive core is dry.

d. All detonating cord trunklines and branchlines shall be free of loops, sharp kinks, or angles that direct the cord back toward the oncoming line of detonation.

e. When connecting a detonator to detonating cord, the detonators shall be taped or otherwise attached securely along the side or the end of the detonating cord, with the end of the detonator containing the explosive charge pointing in the direction in which the detonation is to proceed.

f. Detonators for firing the trunkline shall not be brought to the loading area nor attached to the detonating cord until everything else is in ready for the blast.

29.F.17 The blaster shall keep an accurate, up-to-date record of

explosives, blasting agents, and blasting supplies used in a blast.

29.F.18 Loaded holes shall be stemmed to the collar with non-combustible material.

29.F.19 All loaded holes or charges shall be checked and located and all detonating cord connections shall be inspected before firing the blast.

29.F.20 All charges shall be covered with blasting mats or back covered before firing where blasting may cause injury or damage by flying rock or debris; where mats are used, care shall be taken to protect electric blasting circuits.

29.G WIRING

29.G.01 In any blast using electric detonators, all blasting caps shall be from the same manufacture.

29.G.02 Wiring.

a. Bus wires shall be single solid wires of sufficient current carrying capacity.

b. The insulation on all firing lines shall be adequate and in good condition.

29.G.03 The number of electric blasting caps in a circuit shall not exceed the capacity of blasting machine or power source.

29.G.04 A power circuit used for firing electric detonators shall not be grounded.

29.G.05 Whenever the possibility exists that a leading wire might be thrown onto a live power source by the force of the explosion, care shall be made to see that the total length of wires is kept too short to contact the source or that the wires are securely anchored to the ground: if neither of these requirements can be

met, a nonelectric system shall be used.

29.G.06 The manufacturer's shunt shall not be removed from the cap leg wires until the cap is connected to the lead line or to another cap in preparation for the assembly of two or more caps into a series circuit or when the cap is to be tested.

29.G.07 No lead wire shall be connected to the circuit until it has been grounded to dissipate any static charge.

29.G.08 The circuit, including all caps, shall be tested with an approved blasting instrument (blasting galvanometer, blasting ohmmeter, blaster's ohmmeter, or blaster's multimeter) before being connected to a firing line.

29.G.09 No firing line shall be connected to a blasting machine or other power source until the shot is to be fired; the firing line shall be checked with an approved blasting instrument before being connected to the blasting machine or other power source. ***> See 29.G.08***

29.G.10 When a single series of caps is to be fired, or a number of series of caps is to be fired as a series-in-parallel circuit, the resistance of the circuit shall be checked with an approved blasting instrument. ***> See 29.G.08***

29.G.11 For series-in-parallel circuits, each series shall be "balanced," i.e., have the same resistance.

29.G.12 Each series circuit shall be separately tested for two readings:

a. to insure that the series is complete; and
b. to insure that each series shows the same resistance and that this resistance is as close to the calculated resistance for such a series of caps as the testing instrument will read.

If the first reading shows a series to be incomplete, the faulty cap

or connection shall be located and corrected; if the second reading shows incorrect resistance, the cause shall be found and corrected.

29.H FIRING

29.H.01 Prior to the firing of a shot, all persons in the danger area shall be warned of the blast and ordered to a safe distance from the area; blasts shall not be fired until it is certain that every person has retreated to a safe distance and no one remains in a dangerous location.

29.H.02 Prior to the firing of a shot, a competent flagperson shall be posted at all access points to danger areas.

29.H.03 Prior to the firing of a shot, drill boats and other vessels shall be moved a safe distance from the danger area.

a. Prior to and while the drill boat or vessel is being moved from the danger area, a series of short signals by horn or whistle similar to the usual navigation warning signals shall be given.

b. No blast shall be fired while any vessel under way is closer than 450 m (1,500 ft) to the underwater blasting area; those on board vessels or craft moored or anchored within 450 m (1,500 ft) must be notified before a blast is fired.

c. No blast shall be fired closer than 75 m (250 ft) to a boat or vessel containing an explosive magazine; personnel engaged in drilling operations on another drill boat within 150 m (500 ft) shall leave the drill frames for cover if any holes have been loaded.

d. No blast shall be fired while any swimming or diving is in progress near the blasting area.

e. Whenever a drill boat is moved from the drilling setting, all loaded under water holes shall be fired.

29.H.04 Safety signals.

a. All blasting operations shall use the following safety signals:

(1) WARNING SIGNAL - a one-minute series of long audible signals 5 minutes prior to blast signal;
(2) BLAST SIGNAL - a series of short audible signals I minute prior to the shot; and
(3) ALL CLEAR SIGNAL - a prolonged audible signal following the inspection of blast area.

b. The safety signals shall be given by use of a compressed air whistle, a horn, or equivalent means, and shall be clearly audible at the most distant point in the blast area; the boat whistle on a drill boat shall not be used as a blasting signal.

c. The code for safety signals and warning signs and flags shall be posted at all access points.

d. Employees shall be made familiar with the signals and instructed accordingly.

29.H.05 The person making leading wire connections shall fire the shot: all connections shall be made from the bore hole back to the source of firing current and the leading wire shall remain shorted and not be connected to the blasting machine or other source of current until the charge is to be fired.

29.H.06 After firing an electric blast, the leading wires shall be immediately disconnected from the power source and shunted.

29.H.07 When firing a circuit of electric blasting caps care shall be exercised to ensure that an adequate quantity of delivered current is available in accordance with the manufacturer's recommendations.

29.I POST-BLAST PROCEDURES

29.I.01 Immediately after blast has been fired, the firing line shall be disconnected from the blasting machine or power source; power switches shall be locked open.

29.I.02 An inspection shall be made by the blaster to determine that all charges have been exploded; all wires shall be traced and search made for unexploded cartridges.

29.I.03 Other persons shall not be allowed to return to the area of the blast until an "all clear" signal is given.

29.I.04 Loose pieces of rock and other debris shall be scaled down from the sides of the face of excavation and the area made safe before proceeding with the work.

29.I.05 Misfires.

a. Misfires shall be handled under the direction of the blaster; the blaster shall determine the safest method for handling the hazards of misfires (some misfires may require consultation with the supplier or manufacturer of the explosive material).

b. If a misfire is found, the blaster shall provide proper safeguards for excluding all employees, except those necessary to do the work, from the danger zone.

c. No other work shall be done except that necessary to remove the hazard of the misfire and only those employees necessary to do the work shall remain in the danger zone.

d. No drilling, digging, or picking shall be permitted until all missed holes have been detonated or the blaster has approved that work can proceed.

29.J UNDERWATER BLASTING

29.J.01 A blaster shall conduct all blasting operations and no shot shall be fired without his or her approval.

29.J.02 Loading tubes and casings of dissimilar metals shall not be used because of possible electric transient currents from galvanic action of the metals and water.

29.J.03 Only water-resistant blasting caps and detonating cords shall be used for all marine blasting; loading shall be done through a nonsparking metal loading tube when necessary.

29.J.04 Blasting flags shall be displayed.

29.J.05 The storage and handling of explosive materials aboard vessels used in underwater blasting operations shall be according to provisions in 29.A and 29.C.

29.J.06 When more than one hole is loaded to be fired underwater, a steel shot line shall be anchored and floated over the row of loaded holes.

a. The detonation down line from each loaded hole shall be tied to the steel line and the loose end shall be tied to the detonation trunkline.

b. After the trunkline fires, the steel shotline shall be inspected for misfires; misfires shall be handled in accordance with the requirements of 29.I.

29.J.07 When drilling near or adjacent to a loaded hole, drilling shall be limited to vertical holes only and drilling shall be separated from loaded holes by the depth of water plus the depth of the loaded hole.

a. If a solid casing or drill mast - vertically plumbed with an inclinometer - is extended from the barge and firmly seated on

bedrock, the distance between a loaded hole and one being drilled shall be 1/3 the depth of the hole, with a minimum of 2.4 m (8 ft) between the loaded hole and the one being drilled.

b. Drilling shall be halted to check alignment with an inclinometer every 1.2 m (4 ft) of hole depth.

DEFINITIONS

Blast area: the area in which explosive loading and blasting activities are being conducted.

Blaster: the person(s) authorized to use explosives for blasting purposes.

Blasting agent: any material or mixture, consisting of a fuel and oxidizer, intended for blasting, not otherwise classified as an explosive, and in which none of the ingredients is classified as an explosive, provided that the finished product, as mixed and packaged for use or shipment, cannot be detonated by means of a No. 8 blasting cap when unconfined.

Blasting machine: a device used to supply initiation current to blasting circuits.

Bus wire: an expendable wire used in parallel or series-in-parallel circuits to which are connected the leg wires of electric blasting caps.

Detonating cord: a flexible cord containing a center core of high explosives that when detonated will have sufficient strength to detonate other cap-sensitive explosives with which it is in contact.

Detonator: blasting caps, electric blasting caps, delay electric blasting caps, and nonelectric delay blasting caps.

Energy ratio: a measure of the seismic energy impact of an explosive blast.

Explosives: (1) any chemical compound, mixture, or device, the primary or common purpose of which is to function by explosion (with substantially instantaneous release of gas and heat), unless such compound, mixture, or device is otherwise specifically classified by DOT; (2) all material classified as Class A, Class B, or Class C explosive by DOT.

Lead (leading) wire: an insulated expendable wire used between the electric power source and the electric blasting cap circuit.

Misfire: an explosive charge that failed to detonate.

Mudcapping (bulldozing, adobe blasting, or dobying): blasting by placing a quantity of explosives against a rock or other object without confining the explosives in a drill hole.

Peak particle velocity: a measure of how fast the ground moves during an explosive blast.

Primer: a cartridge or container of explosives into which a detonator or detonating cord is inserted or attached.

Scaled distance: a scaled factor (ft/lb units) of the potential damage to a structure, based on the distance from the nearest structure to the blast site and the weight of explosives per delay.

Springing: the creation of a chamber or pocket in the bottom of a drill hole so that larger quantities of explosives may be inserted; made by the use of a moderate quantity of explosives.

Stemming: a suitable inert incombustible material or device used to confine or separate explosives in a drill hole, or to cover explosives in mudcapping.

SECTION 30

CONTRACT DIVING OPERATIONS

30.A GENERAL

30.A.01 Diving shall not be utilized as a work method if the work objective can be more safely and efficiently accomplished by another means, e.g., using remote controlled television systems in lieu of divers.

30.A.02 Surface supplied air shall be utilized whenever possible in accordance with the practical constraints of diving operations.

30.A.03 Any failure to meet the requirements of this Section will be cause for rejection or cessation of operations.

30.A.04 All contract diving operations shall be performed in accordance with this manual.

30.A.05 The USACE Command, at their discretion, may elect to implement and enforce more stringent diving requirements than stated herein, but under no circumstances will the operational requirements be less than specified in this section.

30.A.06 Contractors shall demonstrate that:

a. each diver potentially exposed to hyperbaric environments is medically fit as attested by a licensed physician.
b. each dive team member has documented training and/or experience consistent with the performance requirements of the scope of work.
c. the Dive Plan format adheres to prescribed safe operating procedures.

30.A.07 Divers will wait at least 12 hours before flying after any dive: this interval should be extended to 24 hours following multiple days of repetitive dives.

30.A.08 Each dive team member shall have current nationally recognized certification in first aid and CPR. First aid training should include the use of oxygen systems required in this section.

30.A.09 Contract diving operations will be monitored and/or inspected by USACE employees who are certified as divers, diving supervisors, or diving inspectors through HQUSACE sponsored training courses; however, use of trained monitors/inspectors with other credentials will be considered on a case-by-case basis and approved in writing by the District Diving Coordinator or USACE Command Diving Coordinator (DDC/UDC).

30.A.10 When diving at altitudes of 300 m (1000 ft) or more of elevation above sea level, contractors shall use appropriate high altitude decompression tables that compensate for the increased elevation.

30.A.11 Contractors shall develop and maintain a safe practices manual that encompasses the contractor's entire diving program.

a. The safe practices manual shall include, as a minimum, the following:

(1) safety procedures and checklists;
(2) assignments and responsibilities of dive team members;
(3) equipment certification, procedures, and checklists;
(4) emergency procedures for fire, equipment failure, adverse weather conditions, and medical illness or injury; and
(5) requirements for inspections.

b. The manual shall be submitted to the USACE Command Dive Coordinator for review at least fifteen days prior to the commencement of dive operations. The manual shall be accepted by the Dive Coordinator prior to the commencement of dive operations.

c. The manual shall be available to all dive team members and Government representatives at the dive location.

30.A.12 The contractor shall submit verification of satisfactory completion of medical fitness examinations for each dive team member who is, or is likely to be, exposed to hyperbaric pressure.

a. This verification, along with an approval for diving, will be performed and signed by a licensed physician and will be submitted to the USACE prior to the commencement of diving operations. This examination will be repeated every twelve months with verification submitted to the USACE.

b. Each diver shall be reexamined after injury requiring medical attention or illness requiring hospitalization.

30.A.13 A dive operations plan shall be developed and implemented by the contractor for each separate diving operation.

a. As a minimum, the plan shall contain the following:

(1) names and duties of dive team members, including diving supervisor;
(2) date, time, and location of the dive operation;
(3) diving mode to be utilized (SCUBA, surface-supplied air, etc.), giving a description of the backup air supply;
(4) nature of work to be performed by the divers and requirements for inspections;
(5) surface and underwater conditions, to include visibility, temperature, thermal protection, and currents;
(6) activity hazard analysis for each phase of work, to include the hazards associated with flying after diving;
(7) maximum depth and bottom time (altitude adjustments to dive tables shall be made for dives made at altitudes of 300 m (1000 ft) or more above sea level);
(8) emergency management plan, to include emergency procedures, means of notification, telephone numbers (for ambulance, doctors, and recompression chamber), and locations of evacuation route, nearest USCG rescue center, and emergency assistance;
(9) lockout/tagout procedures, including procedures for dealing

with differential water pressures due to unequal water elevations;

(10) equipment certification, procedures, and checklists and requirements for special tools and equipment; and
(11) the following statement: "If for any reason the dive plan is altered in mission, depth, personnel, or equipment, the USACE Command Diving Coordinator (UDC) at the district level shall be contacted and shall review any revision prior to actual operation."

b. This plan shall be submitted to the district and reviewed and accepted by the DDC/UDC and the Safety and Occupational Health Office prior to commencement of diving operations.

c. A copy of the accepted plan shall be at the diving location whenever diving is conducted.

d. The plan shall be made available to the government representative: all dive plans will become a part of the contract file.

30.A.14 Prior to each dive, and at the scene of the dive, a Pre-Dive Conference shall be held with all members of the dive team and a representative of the contractor with sufficient authority to implement any requirements made by the USACE diving inspector or coordinator.

30.A.15 Prior to each dive, the entire dive team will be briefed in detail on the following (as a minimum):

a. description of mission and location, including drawings and/or photographs pertinent to the mission and equipment and materials that are to be installed as part of the mission;
b. description of diving apparatus/equipment and craft to be used;
c. maximum working depth with estimated bottom times and water temperatures;
d. names and duties of personnel on the team (when possible, incorporate at least one person on the dive that has previously

performed the same or similar mission);
e. discussion of activity hazard analysis; and
f. emergency procedures.

30.A.16 If for any reason the dive mission is altered, the DDC/UDC shall be contacted by the dive inspector and a revised dive plan will be established, reviewed, and accepted by the DDC/UDC prior to continuing the operation. This review may be conducted electronically and confirmed in writing after completion of the dive operation.

30.A.17 For each diver and dive, the following dive log information, as a minimum, shall be recorded and maintained at the dive location:

a. full name;
b. date and location of dive;
c. maximum depth and bottom time;
d. surface interval between dives;
e. breathing medium and type of equipment used;
f. group classification at beginning and end of each interval;
g. water and ambient air temperature;
h. depth(s) and duration(s) of any decompression stops; and
I. date and time of last previous dive.

30.A.18 For each dive in which decompression sickness and/or pulmonary barotrauma is suspected or symptoms are evident, the following information shall be recorded and maintained:

a. description of signs and symptoms (including depth and time of onset);
b. description and results of treatment; and
c. name, address, and phone number of attending physician.

30.A.19 Copies of the dive logs shall be submitted to the DDC/UDC after completion of the dive operation.

30.B SCUBA DIVING OPERATIONS

30.B.01 SCUBA diving operations shall not be conducted:

a. at depths greater than 30 m (100 ft);
b. on dives outside the no-decompression limits unless a dual lock, multi-place, recompression chamber (capable of recompressing diver at the surface to a depth equivalent to 50 m (165 ft) of sea water) is available at the dive location and is immediately available for use, a diving physician or trained chamber operator is present, and the chamber is of sufficient size to accommodate the patient as well as the chamber tender;
c. against currents exceeding one knot;
d. in enclosed or physically confining spaces, unless line-tended with diver/surface two-way voice communications and an in-water tender/diver located at the underwater point of entry;
e. using closed circuit or semi-closed circuit SCUBA; or
f. in visibility less than 1 m (3 ft) unless line tended with diver/surface two-way voice communications.

30.B.02 Contractor SCUBA teams shall be manned in accordance with the criteria established in Appendix N.

30.B.03 Specific operational requirements for SCUBA operations are as follows:

a. Each SCUBA diver shall be equipped with an alternate air source, e.g., an octopus or bailout bottle with a minimum of 0.85 m^3 (30 ft^3) of air and separate regulator. The safest method shall be analyzed and used during each dive operation.

b. Each diver shall be equipped with a buoyancy compensation device (BCD) capable of maintaining the diver at the surface in a face-up position.

c. Each SCUBA diver shall be equipped with a submersible cylinder pressure gauge capable of being monitored by the diver during the dive.

d. Each SCUBA diver shall be equipped with a weight belt or assembly capable of quick release.

e. Each SCUBA diver shall be equipped with a depth gauge and knife.

f. SCUBA air cylinders shall comply with the following requirements:

(1) air cylinders of seamless steel or aluminum which meet DOT 3AA and DOT 3AL specifications are approved for use on USACE projects;
(2) each cylinder used on USACE projects must have identification symbols stamped into the shoulder of the tank; and
(3) SCUBA tanks used on USACE projects must be visually inspected internally at least annually and hydrostatically tested at least once every 5 years in accordance with DOT and the CGA regulations: test dates will be stamped into the shoulder of each tank.

g. A timekeeping device shall be used for recording diving times for all SCUBA diving operations. When two-way voice communications are not used, each dive supervisor and diver shall have a timekeeping device. When two-way voice communications are used, the dive supervisor, at a minimum shall have a timekeeping device.

h. Each tethered SCUBA diver shall wear a safety harness with a positive buckling device, attachment point for the safety line, and a lifting point to distribute the pull force of the line over the diver's body while maintaining the body in a heads-up vertical position when unconscious or inert.

30.C SURFACE SUPPLIED AIR OPERATIONS

30.C.01 Surface supplied air operations shall not be conducted at depths greater than 58 m (190 ft), except that dives with bottom times of 30 minutes or less may be conducted to depth of 67 m

(220 ft); exceptional exposure dives, as defined by the US Navy Diving Manual, shall not be conducted except in emergency lifesaving situations.

30.C.02 Surface supplied air equipment components shall be a type specifically designed to be used in diving support systems.

30.C.03 Dual lock, multi-place, recompression chambers shall be available and ready for use at the dive location for any dive outside the no-decompression limits or deeper than 30 m (100 ft). A diving physician, or a trained chamber operator in communication with a diving physician, shall be in attendance with the chamber.

30.C.04 A bell shall be used for dives with an in-water decompression time greater than 120 minutes, unless heavy gear is worn or diving is conducted in physically confining spaces.

30.C.05 Each surface supplied air diving team will be manned in accordance with the criteria established in Appendix N.

30.C.06 Minimum specific operational requirements for surface supplied air diving operations are as follows:

a. each diver shall be continuously tendered while in the water, with one diver per tender, regardless of depth;
b. an underwater tender/diver shall be stationed at the underwater point of entry when diving is conducted in enclosed or physically confining spaces;
c. each diving operation shall have a primary breathing air supply sufficient to support divers for the duration of the planned dive, including decompression;
d. a surface supplied standby diver will be dressed out and readily available when a diver is in the water (the standby diver may remove his or her head gear after it is tested for proper operation);
e. except where heavy gear is worn, each diver must have a

reserve breathing supply available which can be turned on immediately by the diver in the event of loss of air;
f. each dive location shall have a reserve breathing air supply in-line capable of supporting the dive operation;
g. for dives deeper than 30 m (100 ft) or outside the no-decompression limits and using heavy gear, an extra air hose supplying breathing air to the diver shall be available to the standby diver: an in-water support stage shall be provided to divers in water when using heavy gear, regardless of depth; and
h. electronic communication systems shall be incorporated in all surface supplied air diving operations: all dives shall be terminated if voice communications are lost.

30.D MIXED-GAS DIVING OPERATIONS

30.D.01 Mixed-gas diving will be in compliance with the requirements of 29 CFR 1910 Subpart T, the Association of Diving Contractors (ADC) Consensus Standards for Commercial Diving Operations, and the requirements of this Section.

30.D.02 Mixed-gas diving shall be conducted only when a decompression chamber is ready for use at the dive location and either:

a. a bell is used at depths greater than 67 m (220 ft) or when the dive involves in-water decompression time of greater than 120 minutes (except when heavy gear is worn or when diving in physically confining spaces), or
b. a closed bell is used at depths greater than 90 m (300 ft), except when diving is conducted in physically confining spaces.

30.D.03 A separate dive team member shall tend each diver in the water.

30.D.04 A standby diver shall be dressed out and readily available while a diver is in the water. (The standby diver may remove his or her head gear after it is tested for proper operation.)

30.D.05 A diver shall be stationed at the underwater point of entry when diving is conducted in enclosed or physically confining spaces.

30.D.06 Each diving operation shall have a primary breathing gas supply sufficient to support divers for the duration of the planned dive, including decompression.

30.D.07 Each diving operation shall have a dive-location reserve breathing gas supply.

30.D.08 When heavy gear is worn:

a. an extra breathing gas hose capable of supplying breathing gas to the diver in the water shall be available to the standby diver, and
b. an in-water stage shall be provided to divers in the water.

30.D.09 An in-water stage shall be provided for divers without access to a bell for dives deeper than 30 m (100 ft) or outside the no-decompression limits.

30.D.10 When a closed bell is used, one dive team member in the bell shall be available and tend the diver in the water.

30.D.11 Except when heavy gear is worn or where physical space does not permit, a diver-carried reserve breathing gas supply shall be provided for each diver:

a. diving deeper than 30 m (100 ft) or outside the no-decompression limits, or
b. prevented by the configuration of the dive area from directly ascending to the surface.

30.E EQUIPMENT REQUIREMENTS

30.E.01 Equipment modifications, repairs, tests, calibrations, or maintenance shall be recorded by means of a tagging or logging

system, and include the date and nature of work performed and the name of the individual performing the work.

30.E.02 Air compressor systems used to supply air to surface supplied air divers shall be equipped with a volume tank with a check valve on the inlet side, a pressure gauge, a relief valve, and a drain valve.

30.E.03 Compressors shall be of sufficient capacity to overcome any line loss or other losses and deliver a minimum 4.5 cfm (actual) to each diver at the maximum diving depth.

30.E.04 Air compressor intakes shall be located away from areas containing exhaust or other contaminants.

30.E.05 Air compressor systems, both high pressure (SCUBA) and low pressure (surface-supplied) will be tested for air purity on a six-month basis by means of sampling at the connection to the distribution system. Purchased air will also be tested and certified.

a. Proof of air certification shall be provided the USACE Command prior to the commencement of operations. Proof of air certification may be verified by submittal of the contractor's air testing logbook (or similar verification) or by submittal of private laboratory test results. Contractors may self-test contractor-owned air compressors.

b. Air purity standards are as follows:

(1) air shall not contain a level of carbon monoxide greater than 20 ppm;
(2) air shall not contain a level of carbon dioxide greater than 1,000 ppm;
(3) air shall not contain a level of oil mist greater than 5 milligrams per cubic meter;
(4) air shall not contain a level of hydrocarbons other than methane greater than 25 ppm; and

(5) air shall not contain a noxious or pronounced odor.

30.E.06 Breathing air supply hoses.

a. Breathing air supply hoses shall meet the specifications listed in SAE 100-R3, have a working pressure of the total breathing gas system, and have a rated bursting pressure at least four times the working pressure.

b. Breathing air supply hoses shall have connectors made of corrosion resistant materials and have a working pressure at least equal to the working pressure of the hose to which they are attached: connectors must not be able to become accidentally disengaged.

c. Umbilicals shall be marked in 3 m (10 ft) increments to 30 m (100 ft) (beginning at the divers end) and in 15 m (50 ft) increments thereafter.

d. Umbilicals shall have a nominal breaking strength of 1200 kg (2650 lb) and shall be made of kink resistant materials.

e. A safety line of at least 1 cm (3/8 in) synthetic material shall be included as an integral part of each umbilical.

f. Hoses must be tested at least annually to 1.5 times the working pressure.

g. When hoses are not in use, their open ends must be closed by taping or other means.

30.E.07 Surface-supplied air and mixed gas helmets and masks shall have a non-return valve at the attachment between the helmet or mask and hose which will close readily and also have an exhaust valve; helmets and masks shall have a minimum ventilation rate capacity of 2.1 L/s (4.5 cfm) (actual) at the depth at which they are operated.

30.E.08 Surface-supplied air and mixed gas helmets and masks must be capable of supporting a reserve breathing supply which can be immediately turned on by the diver in event of loss of air.

30.E.09 Surface-supplied air and mixed gas helmets and masks must be capable of supporting a two-way, diver-surface communication system.

30.E.10 Weights and harnesses.

a. Unless heavy gear is worn, divers shall be equipped with a weight belt or assembly capable of quick release.

b. Unless heavy gear is worn, each diver shall wear a safety harness with a positive buckling device, attachment point for the safety line, and a lifting point to distribute the pull force of the line over the diver's body while maintaining the body in a heads-up vertical position when unconscious or inert.

30.E.11 The following emergency and first aid equipment shall be located at all dive sites:

a. a first aid kit meeting the requirements of Section 3;
b. an oxygen resuscitation system capable of delivering oxygen for a minimum of 30 minutes; and
c. a stokes litter or backboard, with attached floatation device.

30.E.12 An appropriate dive flag will be displayed at the dive location during diving operations.

30.E.13 Hand-held power tools shall be tested and certified to be safe for underwater use; these tools shall be de-energized before being placed into or retrieved from the water and shall not be supplied with power until requested by the diver.

30.F ADVANCED DIVING TECHNOLOGY

30.F.01 The use of one-atmosphere suits, e.g., Newt Suits,

requires the specific approval of the HQUSACE Diving Coordinator prior to the use of such equipment.

30.F.02 The use of "enriched air" or Nitrox (EANx) breathing mixtures by contractors requires the prior approval by the DDC/UDC. Decompression tables designed specifically for the Nitrox mixture being used shall be followed without exception.

a. Contractors must provide evidence of training and experience with Nitrox breathing mixtures prior to actual diving operations.

b. Nitrox breathing mixture shall be analyzed/tested by the diver to assure proper mix prior to each use.

DEFINITIONS

Bell: an enclosed compartment, pressurized (closed bell) or unpressurized (open bell), which allows the diver to be transported to and from the underwater work area and which may be used as a temporary refuge during diving operations.

Bottom time: the total elapsed time, measured in minutes, from the time when the diver leaves the surface in descent to the time that the diver begins ascent.

Decompression sickness: a condition with a variety of symptoms which may result from gas or bubbles in the tissues of divers after pressure reduction.

Decompression table: a profile or set of profiles of depth-time relationships for ascent rate and breathing mixtures to be followed after a specific depth-time exposure or exposures.

Dive location: a surface or vessel from which a diving operation is conducted.

Diving inspector: a USACE employee who inspects a contractor's

diving operations while work is in progress. Diving inspectors shall be designated in writing by the USACE

Commander upon nomination by the employee's staff level supervisor and with concurrence of the UDC. Diving inspectors must have successfully completed a USACE diving safety, diving supervisor, or diving inspector course and shall maintain certification by attending a HQUSACE-sponsored diving inspectors course every four years.

Diving supervisor: the employer, or an employee designated by the employer, at the dive location in charge of all aspects of the diving operation which affect the safety and health of dive team members. The diving supervisor shall have experience and training in the conduct of the assigned diving operation.

Dive team: divers and support employees involved in a diving operation, including the diving supervisor.

Heavy gear: diver-worn deep-sea dress, including helmet, breastplate, dry suit, and weighted shoes, e.g., U.S. Navy Mark V gear.

In-water stage: a suspended underwater platform which supports a diver in the water.

Mixed-gas diving: a diving mode in which the diver breathes a mixture other than air, e.g., helium-oxygen.

No-decompression limits: the depth-time limits of the "no-decompression limits and repetitive dive group designation table for no-decompression air dives" as specified in the U.S. Navy Diving Manual or equivalent.

Recompression chamber: a pressure vessel for human occupancy such as a surface decompression chamber, closed bell, or deep diving system used to decompress divers to treat decompression sickness.

Safety and Occupational Health Office Dive Safety Representative: the Safety and Occupational Health Office representative assigned the responsibility of dive safety. This individual provides dive safety advice to operational elements and actively participates in the review and comment process for all diving plans and hazard analyses, as well as on-site monitoring of diving operations; must successfully complete the USACE diving safety, diving supervisor or diving inspector course and maintain certification by attending a HQUSACE-sponsored dive inspector course every four years. Unless required by position, this individual is not required to perform twelve working/training dives to maintain certification.

Standby diver: a diver at the dive location available to assist a diver in the water; standby divers will be dressed for immediate entry into the water.

USACE Diving Coordinator (UDC**)**: a USACE employee assigned the responsibility for organizing, integrating, and monitoring the total dive program within a USACE Command. This individual and an alternate (to perform in the absence of the primary UDC) shall be appointed, in writing, by the USACE Commander/-Director and shall assure adherence to all applicable rules and regulations: at the Major Subordinate Command (Division), the Diving Coordinator shall provide program guidance and monitor and annually review the MSC dive program at all subordinate levels; at the District, Laboratory, and FOA level, the Diving Coordinator shall review all safe practices manuals, dive plans, medical certificates, and dive team qualifications and experience to assure compliance with this regulation. The UDC and the alternate shall, as a minimum, successfully complete the HQUSACE-approved Diving Safety or Diving Supervisor Training Course and shall maintain certification by attending the diving refresher course every four years. UDCs attending the Diving Safety course are not required to perform twelve working/-training dives unless they are in a dual position as a USACE diver or USACE Diving Supervisor.

SECTION 31

TREE MAINTENANCE AND REMOVAL

31.A GENERAL

31.A.01 Each location where tree maintenance or removal is done shall be under the direction of a qualified tree worker.

31.A.02 Working near electrical equipment and systems. ***> Also see Section 11***

a. Employees working in the proximity of electrical equipment or conductors shall consider all such equipment or conductors energized with potentially fatal voltage, never to be touched (directly or indirectly).

b. An inspection shall be made by a qualified tree worker to determine whether an electrical hazard exists before climbing, otherwise entering, or performing any work in or on a tree.

c. Only a qualified line-clearance tree trimmer or qualified line-clearance tree trimmer trainee (under the direct supervision of qualified personnel) shall be assigned to the work if it is found that an electrical hazard exists.

d. There shall be a second qualified line-clearance tree trimmer or line-clearance tree trimmer trainee within normal voice communication during the clearing operations aloft under the following conditions:

(1) when the line-clearance tree trimmer or line-clearance tree trimmer trainee must approach any closer than 3 m (10 ft) to any conductor or electrical apparatus energized in excess of 750 volts;
(2) when branches or limbs being removed cannot first be cut (with a pole pruner/pole saw) sufficiently clear of the equipment or conductors so as to avoid contact; or

(3) when roping is required to remove branches or limbs from such equipment or conductors.

e. Line-clearance tree trimmers and line-clearance tree trimmer trainees shall maintain the distances from energized conductors as specified in Table 11-5. All other tree workers shall maintain a minimum distance of 3 m (10 ft) from energized conductors rated 50 kilovolt phase-to-phase or less; for conductors rated over 50 kilovolt phase-to-phase, the minimum distance shall be 3 m +/- 1 cm (10 ft + 4/10 in) for each kilovolt over 50 kilovolt.

31.A.03 During all tree working operations above a height of 3.6 m (12 ft) which are not subject to the requirements of 31.A.02d there shall be a second worker in the vicinity.

31.A.04 Equipment.

a. Equipment shall be inspected, maintained, repaired, and used in accordance with the manufacturer's instructions.

b. Employees shall be instructed in the safe and proper use of all equipment provided to them.

31.A.05 Climbing ropes shall not be used to lower limbs or other parts of trees or to raise or lower equipment.

31.A.06 A handle shall be used for raising and lowering tools.

31.A.07 Tools used for cabling, bark tracing, cavity work, etc., shall be carried in a bag or belt designed to hold tools and not put in the pockets or stuck in the top of a boot.

31.A.08 When placing an employee in a tree with an aerial device, prior to leaving the basket for entry onto the tree, and before removing the safety line attached to the basket, the employee shall be safely secured to the tree; the procedure shall be reversed when entering the basket from the tree.

31.A.09 See Appendix O for recommended safe tree maintenance and removal practices.

31.B TREE CLIMBING

31.B.01 Equipment.

a. Climber spurs shall be of the tree-climbing type and shall have gaffs of the type and length suitable for the tree being climbed.

b. Climbing ropes shall have a minimum diameter of 1.25 cm (0.5 in) and be constructed of a synthetic fiber, with a minimum nominal breaking strength of 2450 kg (5400 lb) when new: maximum working elongation (elasticity) shall not exceed 7% at a load of 245 kg (540 lb) (10% maximum breaking strength).

c. Polypropylene or other synthetic ropes having similar low melting points shall not be used as climbing ropes.

31.B.02 A tree worker shall be tied in with an approved type of climbing rope and safety saddle when working above the ground: this does not necessarily apply to a worker ascending into a tree; work may be performed while standing on a self-supporting ladder but only when the worker is tied in as required.

31.B.03 During climbing operations, tree limbs should be inspected before weight is applied to them.

31.B.04 A 16 mm (5/8 in) metal shackle shall be secured to the end of a support line that meets minimum standards for a climbing line. The support line shall be tied to the pin of the shackle with the climbing line placed through the shackle; the support line shall be tied off at the base of the tree or any other acceptable anchor.

31.B.05 The climbing line shall be crotched as soon as

practicable after the employee is aloft, and a taut-line hitch tied and checked.

31.B.06 The worker shall be completely secured with the climbing line before starting the operation. The worker shall remain tied in until the work is completed and he/she has returned to the ground; if it is necessary to recrotch the rope in the tree, the worker shall re-tie in or use the safety strap before releasing the previous tie.

31.B.07 Tree workers shall not carry tools in their hands while climbing: tools shall be raised and lowered one at a time by means of a line, except when working from an aerial-lift device or during topping or removing operations.

31.C FELLING

31.C.01 Prior to felling operations, the employee shall consider:
a. the tree and the surrounding area for anything that may cause trouble when the tree falls;
b. the shape of the tree, the lean of the tree, and decayed or weak spots;
c. wind force and direction;
d. the location of other people; and
e. electrical hazards.

31.C.02 Prior to felling operations, the work area shall be cleared to permit safe working conditions and an escape route shall be planned.

31.C.03 Each worker shall be instructed as to exactly what he/she is to do: all workers not directly involved in the operation shall be kept clear of the work area.

31.C.04 Before starting to cut, the operator shall be sure of his/her footing and must clear away brush, fallen trees, and other materials that might interfere with cutting operations.

31.C.05 A notch and backcut shall be used in felling trees over 13 cm (5 in) in diameter (measured at breast height): no tree shall be felled by "slicing" or "ripping" cuts.

a. The depth or penetration of the notch shall be about one-third the diameter of the tree.

b. The opening or height of the notch shall be about 65 mm (2.5 in) for each 0.3 m (1 ft) of the tree's diameter.

c. The backcut shall be made higher (approximately 5 cm (2 in)) than the base of the notch to prevent kickback.

31.C.06 The employee shall work from the uphill side whenever possible.

31.C.07 Just before the tree or limb is ready to fall, an audible warning shall be given to all those in the area: all persons shall be safely out of range when the tree falls.

31.C.08 If there is danger that the trees being felled may fall in the wrong direction or damage property, wedges, block and tackle, rope, or wire cable (except when an electrical hazard exists) shall be used: all limbs shall be removed from trees to a height and width sufficient to allow the tree to fall clear of any wires and other objects in the vicinity.

31.C.09 Special precautions shall be taken when roping rotten or split trees due to the potential for falling in an unexpected direction even though the cut is made on the proper side.

31.C.10 Persons shall be kept back from the butt of a tree that is starting to fall.

31.D BRUSH REMOVAL AND CHIPPING

31.D.01 Brush and logs shall not be allowed to create a hazard at the work site.

31.D.02 Employees working with a brush chipper shall be trained in its safe operation; the chipper shall be operated in accordance with the manufacturer's recommendations.

31.D.03 Brush chippers.

a. Rotary drum and disk-type tree or brush chippers not equipped with a mechanical in-feed system shall be equipped with an in-feed hopper not less than 215 cm (85 in) (the sum of the horizontal distance from the chipper blade out along the center of the chute to the end of the chute and the vertical distance from the chute down to the ground) and shall have sufficient height on its side members to prevent personnel from contacting the blades or knives of the machine during normal operations.

b. Rotary drum and disk-type tree or brush chippers not equipped with a mechanical in-feed system shall have a flexible antikickback device installed in the in-feed hopper for the purpose of protecting the operator and other persons in the machine area from the hazards of flying chips and debris.

c. Disk-type tree or brush chippers equipped with a mechanical in-feed system shall have a quick stop and reversing device on the in-feed: the activating mechanism for the quick stop and reversing device shall be located across from the top, along each side of, and as close as possible to the feed end of the in-feed hopper and within easy reach of the operator.

d. The feed chute or feed table of a chipper shall have sufficient height on its side members to prevent operator contact with the blades or knives during normal operation.

e. A swinging baffle shall be mounted in front of the knives to prevent throwback of material.

f. Brush chippers shall be equipped with an exhaust chute of sufficient length or design to prevent contact with the blade.

g. Brush chippers shall be equipped with a locking device on the ignition system to prevent unauthorized starting of the equipment.

h. Brush chipper cutting bars and blades shall be kept sharp, properly adjusted, and otherwise maintained in accordance with the manufacturer's recommendations.

31.D.04 Trailer brush chippers detached from trucks shall be chocked or otherwise secured.

31.D.05 All workers feeding brush into chippers shall wear eye protectors: loose clothing, gauntlet-type gloves, rings, and watches shall not be worn by workers feeding the chipper.

31.D.06 Employees shall never place hands, arms, feet, legs, or any other part of the body on the feed table when the chipper is in operation or the rotor is turning; push sticks - of material which can be consumed by brush chipper - shall be used.

31.D.07 Brush chippers shall be fed from the side of the centerline, and the operator shall immediately turn away from the feed table when the brush is taken into the rotor; chippers shall be fed from the curbside whenever possible.

31.D.08 Material such as stones, nails, sweepings, etc. shall not be fed into brush chippers.

31.D.09 The brush chipper chute shall not be raised while the rotor is turning.

31.E OTHER OPERATIONS AND EQUIPMENT

31.E.01 Pruning and trimming.

a. Pole pruners, pole saws, and similar tools shall be equipped with wood or nonmetallic poles; actuating cords shall be of a nonconducting material.

b. Pole pruners and pole saws shall be hung securely in a vertical position with the sharp edges away from employees; they shall not be hung on utility wires or cables or left overnight in trees.

c. When necessary, warning shall be given by the worker in the tree before a limb is dropped.

31.E.02 Limbing and bucking.

a. Whenever it is possible to do so, the tree worker shall work on the side on which the limb is being cut.

b. Branches bent under tension shall be considered hazardous.

c. When topping or lowering limbs, consideration shall be given to the use of taglines to control the limbs: a separate line shall be attached to limbs which cannot be dropped or are to heavy to be controlled by hand; the use of the same crotch for both safety rope and work rope shall be avoided.

d. In bucking, tree workers shall stand on the uphill side of the work whenever possible; the tree worker shall block the log to prevent rolling when necessary.

e. When bucking, wedges shall be used as necessary to prevent binding of the guide bar or chain.

31.E.03 Stump cutters shall be equipped with enclosures or guards that effectively protect the operator.

31.E.04 Trucks.

a. A steel bulkhead or equivalent protection shall be provided to protect the occupants of vehicles from load shifts.

b. Logs or brush shall be securely loaded onto trucks in such a

manner as not to obscure taillights or brake lights and vision, or to overhang the side.

c. In order to avoid the hazard of spontaneous combustion or the production of undesirable products, wood chips shall not be left in trucks for extended periods.

31.E.05 Power saws.

a. Power saws weighing more than 7 kg (15 lb) that are used in trees shall be supported by a separate line, except when used from an aerial lift device.

b. Where there are no lateral branches on which to crotch a separate support line for power saws weighing more than 7 kg (15 lb), a false crotch shall be used.

c. The engine shall be started and operated only when all co-workers are clear of the saw.

d. The operator will shut off the saw when carrying it over slippery surfaces, through heavy brush, and when adjacent to personnel: the saw may be carried running (idle speed) for short distances (less than 15 m (50 ft)) as long as it is carried to prevent contact with the chain or muffler.

31.E.06 Chopping tools.

a. Chopping tools that have loose or cracked heads or splintered handles shall not be used.

b. Chopping tools shall never be used while working aloft.

c. Chopping tools shall be swung away from the feet, legs, and body, using the minimum power practical for control.

d. Chopping tools shall not be driven as wedges or used to drive metal wedges.

31.E.07 Cant hooks, cant dogs, tongs, and carrying bars.

a. Hooks shall be firmly set before applying pressure.

b. Workers shall be warned and shall be in the clear before logs are moved.

c. The points of hooks shall be at least 5 cm (2 in) long and shall be kept sharp.

d. Workers shall stand to the rear and uphill when rolling logs.

31.E.08 Wedges and chisels.

a. Wedges and chisels shall be properly pointed and tempered.

b. Only wood, plastic, or soft metal wedges shall be used with power saws.

c. Wood-handled chisels should be protected with a ferrule on the striking end.

DEFINITIONS

Aloft: at a height of 6 feet or more above the ground.

Backcut: the final cut in a felling operation, made horizontally on the opposite side from the undercut. ***> See definition of notch***

Bucking: the act of sawing a felled tree or limbs into smaller sections.

Crotch: to pass a rope through the crotch of a limb, or false crotch, in such a way that the load will be supported by the main leader.

False crotch: a pulley, block, sling, lashing, or metal ring,

affixed to a tree's leader of limb, through which a load line is passed, to raise or lower limbs or equipment.

Leader: the upper portion of the primary axis of a tree.

Limbing: to cut limbs from a tree.

Notch: when cutting a tree to be felled, a notch is cut into the tree on the same side to which the tree is to fall; the notch consists of a horizontal cut (of depth approximately one-third the tree's diameter); the top of the notch is cut at a 45° angle from a height of 65 mm (2.5 in) per 0.3 m (1 ft) of diameter above the base of the notch.

Qualified line-clearance tree trimmer: a tree worker who, through related training and on-the-job experience is familiar with the hazards in line clearance and has demonstrated his or her ability in the performance of the special techniques involved.

Qualified line-clearance tree trimmer trainee: any worker undergoing line-clearance tree trimming training who, in the course of such training, is familiar with the hazards in line clearance and has demonstrated his ability in the performance of the special techniques involved.

Qualified tree worker: an individual who, through related training and on-the-job experience, is familiar with equipment, techniques, and hazards of tree maintenance and removal and with the equipment used in such operations and has demonstrated his or her ability in the performance of the special techniques involved.

Taut-line hitch: a knot used for securing all workers aloft to their climbing rope, and consisting of either one or two wraps over two wraps.

Tied in: the term that describes a tree climber whose climbing line has been properly crotched and attached to the saddle and

whose taut-line hitch is tied.

SECTION 32

AIRFIELD OPERATIONS

32.A GENERAL

32.A.01 The following safety requirements shall be in addition to the airfield's safety requirements. When an airfield has safety requirements which differ from those of this section, the more stringent requirements shall prevail.

32.A.02 Prior to the performance of any work upon or around an airfield, the Government's Designated Authority shall be informed and provided a written description of work activities, work locations, work equipment and personnel requirements, and work schedules.

a. The Government's Designated Authority shall also be informed, in writing, of any changes to this information.

b. The Government's Designated Authority shall keep the airport operator informed so that Notice to Airmen can be issued to reflect hazardous conditions.

32.A.03 Unless a runway is closed by the airfield operator and properly marked, it shall not be used for purposes other than aircraft operation without permission of the Government's Designated Authority.

32.A.04 All paved surfaces, such as runways, taxiways, and hardstands, shall be kept clean at all times, particularly with regards to stones and other small objects which might damage aircraft propellers or jet aircraft.

32.A.05 When mobile equipment is not performing work on an airfield it shall be removed to a location(s) which is approved by the Government's Designated Authority and at a distance of at

least 225 m (750 ft) (plus any additional distance necessary to ensure the safety of airfield operations) from the runway centerline

32.A.06 Excavations.

a. An excavation shall not be opened unless there is material on hand and ready for placing in it.

b. As soon as practicable after material has been placed and work approved, the excavation shall be backfilled and compacted; meanwhile, all hazardous conditions shall be identified as specified in this section.

32.A.07 Nothing shall be placed upon the landing areas without authorization of the Government's Designated Authority.

32.A.08 Effective control of vehicles required to enter or cross aircraft movement areas shall be maintained.

32.A.09 Those landing areas hazardous to aircraft shall be outlined (unless otherwise directed by the Government's Designated Authority).

a. During daylight, areas shall be outlined with red flags spaced every 60 m (200 ft).

b. During periods of darkness, areas shall be outlined with battery-operated low-intensity red flashing lights spaced every 60 m (200 ft).

c. During dawn and dusk, and when weather conditions reduce visibility, areas shall be outlined with both red flags and battery-operated low-intensity red flashing lights spaced every 60 m (200 ft).

32.A.10 When work is to be performed at an airfield where flying is controlled, permission to enter a landing area shall be obtained

from the control tower operator every time entry is required, unless the landing area has been closed by the airfield operator and marked as hazardous in accordance with 32.A.09a-c.

a. All vehicles which operate in landing areas shall be identified by means of a red flag on a staff attached to, and flying above, the vehicle: the flag shall be 1 m (3 ft) square and consist of a checkered pattern of international orange and white squares of 0.3 m (1 ft) on each side.

b. All other equipment and materials in the landing area shall be marked as specified in 32.A.09a-c.

32.A.11 When working in landing areas, work shall be performed so as to leave that portion of the landing area which is available to aircraft free from hazards, including holes, piles or material, and projecting shoulders that might damage an airplane tire.

32.A.12 Nothing shall be placed upon a safety precaution area without permission of the Government's Designated Authority.

32.A.13 All equipment and materials in a safety precaution area shall be marked as specified in 32.A.09a-c: if an object in a safety precaution area projects above the approach-departure clearance surface or above the transitional surface, the object shall be marked with a red light.

DEFINITIONS

Approach-departure clearance surface: an extension of the primary surface and the clear zone at each end of the runway, first along an inclined plane (glide angle) and then along a horizontal plane, both flaring symmetrically about the runway centerline extended.

Approach-departure clearance zone: the ground area under the approach-departure clearance surface.

Landing area: (1) the primary surfaces, comprising the surface of the runway, runway shoulders, and lateral safety zones, (2) the "clear zone" beyond the ends of each runway (i.e., the extension of the primary surface), (3) all taxiways, and the lateral clearance zones along each side for the length of the taxiways), and (4) all aircraft parking aprons plus the area extending beyond each edge all around the aprons.

Safety precaution area: those portions of approach-departure clearance zones and transitional zones where placement of objects incident to contract performance might result in vertical projections at or above the approach-departure clearance, or the transitional surface.

Transitional surface: a sideways extension of all primary surfaces, clear zones, and approach-departure clearance surfaces along inclined planes.

Transitional zone: the ground area under the transitional surface (and adjoining the primary surface, clear zone, and approach-departure clearance zone).

APPENDIX A

MINIMUM BASIC OUTLINE FOR ACCIDENT PREVENTION PLAN

An accident prevention plan is, in essence, a safety and health policy and program document. The following areas are typically addressed in an accident prevention plan, but a plan shall be job-specific and shall also address any unusual or unique aspects of the project or activity for which it is written.
The accident prevention plan shall interface with the employer's overall safety and health program. Any portions of the overall safety and health program that are referenced in the accident prevention plan shall be included as appropriate.

1. SIGNATURE SHEET. Title, signature, and phone number of the following:
   a. plan preparer (corporate safety staff person, QC);
   b. plan approval, e.g., owner, company president, regional vice president (HTRW activities require approval of a Certified Industrial Hygienist (or qualified Industrial Hygiene personnel for in-house USACE activities; a Certified Safety Professional (or qualified USACE safety personnel for in-house work) may approve the plan for operations involving UST removal where contaminants are known to be petroleum, oils, or lubricants);
   c. plan concurrence (provide concurrence of other applicable corporate and project personnel (contractor)), e.g., Chief of Operations, Corporate Chief of Safety, Corporate Industrial Hygienist, project manager or superintendent, project safety professional, project QC.

2. BACKGROUND INFORMATION. List the following:
   a. contractor;
   b. contract number;
   c. project name;
   d. brief project description, description of work to be performed, and location (map);
   e. contractor accident experience (provide information such