CEMP-RT Engineer Manual 1110-1-4002	Department of the Army U.S. Army Corps of Engineers Washington, DC 20314-1000	EM 1110-1-4002 30 Jun 1997
	Engineering and Design GUIDANCE FOR LOW-LEVEL RADIOACTIVE WASTE (LLRW) AND MIXED WASTE (MW) TREATMENT AND HANDLING	
	Distribution Restriction Statement Approved for public release; distribution is unlimited.	

EM 1110-1-4002
30 June 1997

US Army Corps
of Engineers®

ENGINEERING AND DESIGN

Guidance for Low-Level Radioactive Waste (LLRW) and Mixed Waste (MW) Treatment and Handling

This manual is approved for public release, distribution is unlimited.

ENGINEER MANUAL

AVAILABILITY

Copies of this and other U.S. Army Corps of Engineers publications are available from National Technical Information Service, 5285 Port Royal Road, Springfield, VA 22161. Phone (703)487-4650.

Government agencies can order directly from the U.S. Army Corps of Engineers Publications Depot, 2803 52nd Avenue, Hyattsville, MD 20781-1102. Phone (301)394-0081. U.S. Army Corps of Engineers personnel should use normal publication distribution channels.

UPDATES

For a list of all U.S. Army Corps of Engineers publications and their most recent publication dates, refer to Engineer Pamphlet 25-1-1, Index of Publications, Forms and Reports.

DEPARTMENT OF THE ARMY
U. S. Army Corps of Engineers
Washington, DC 20314-1000

EM 1110-1-4002

CEMP-RT

Manual
No. 1110-1-4002

30 June 1997

Engineering and Design
GUIDANCE FOR LOW-LEVEL RADIOACTIVE WASTE (LLRW) AND MIXED WASTE (MW) TREATMENT AND HANDLING

1. Purpose. This engineer manual (EM) contains guidelines for the treatment and handling of contaminated materials and structures during the cleanup and environmental restoration of sites contaminated by radioactive waste containing low-level radioactive waste (LLRW) either alone or combined with hazardous/toxic components to make mixed waste (MW). Specifically y, the guidelines relate to remedial action concerning essentially uncontrolled LLRW or MW contamination arising from past practices at the sites. The primary purpose of this manual is to describe alternatives for LLRW and MW collection, handling, treatment, volume reduction, packaging, temporary storage, and transportation. These descriptions are intended to allow evaluation and selection of the most appropriate courses of action for the site to be remediated. This manual is not intended to provide in-depth and detailed technical recommendations, sophisticated scientific procedures, or site-specific recommendations. In addition to the USACE, Army, and Department of Defense (DoD), technical information on the treatment and handling of LLRW and MW are described and regulated by other Federal agencies including the Nuclear Regulatory Agency (NRA), the Department of Energy (DOE), the Environmental Protection Agency (EPA), the Department of Transportation (DOT), and the Occupational Safety and Health Administration (OSHA).

2. Applicability. The guidelines within this manual are applicable to all USACE elements and major subordinate commands (MSC) having responsibility through governmental interagency agreement or by assignment by HQUSACE for the remediation of sites contaminated by LLRW and MW. These guidelines are applicable to accomplishment of both the Military and Civil Works missions of USACE. Strictly chemical or biological aspects of sites are not addressed except in passing reference to their component part of MW. Involvement may arise, for example, as support to site-owning agencies such as the DOE or as support to the EPA activities associated with non-government-owned site remediation. Such site remediation activities will fall within the purview of the Comprehensive Environmental Response, Compensation, and Liability Act (CERCLA); the Resource Conservation and Recovery Act (RCRA); the Hazardous and Solid Waste Amendments (to RCRA) (HSWA); or the Superfund Amendments and Reauthorization (of CERCLA) Act (SARA). In the event of military (Department of the Army, specifically) responsibility for MW and LLRW sites requiring remediation, this manual applies as directed by HQUSACE. Such involvement will fall under the Defense Environmental Restoration Program (DERP). Oversight responsibilities for managing disposal of DoD LLRW have been assigned to Headquarters, U.S. Army Industrial Operations Command (IOC), Rock Island, Illinois. In such a role IOC is responsible for disposal of all radioactive material generated by the DoD at all currently licensed land burial sites in the United States, and for

maintaining the required records for the DOD on the type and quantity of disposed radioactive material.

FOR THE COMMANDER:

OTIS WILLIAMS
Colonel, Corps of Engineers
Chief of Staff

EM 1110-1-4002

DEPARTMENT OF THE ARMY
U.S. Army Corps of Engineers
Washington, DC 20314-1000

CEMP-RT

Manual
No. 1110-1-4002

30 June 1997

Engineering and Design
GUIDANCE FOR LOW-LEVEL RADIOACTIVE WASTE (LLRW) AND MIXED WASTE (MW) TREATMENT AND HANDLING

Table of Contents

Subject	Paragraph	Page
Chapter 1		
Introduction		
Purpose	1-1	1-1
Applicability	1-2	1-1
References	1-3	1-1
Background	1-4	1-1
Scope	1-5	1-1
Coordination of DoD LLRW Disposal with AMCCOM	1-6	1-2
Chapter 2		
Definitions and Effects		
Radioactivity	2-1	2-1
Radioactive Waste Definitions	2-2	2-6
Hazardous Waste Definitions	2-3	2-10
Mixed Waste Definitions	2-4	2-10
Chapter 3		
Laws and Regulations Affecting Disposal of Low-Level Radioactive Waste and Mixed Waste		
Introduction	3-1	3-1
Importance and Applicability	3-2	3-1
Additional Information Sources	3-3	3-1
Chapter 4		
Types and Sources of Wastes		
Low-Level Radioactive Wastes	4-1	4-1
Hazardous Wastes	4-2	4-1
Mixed Wastes	4-3	4-3
Observed Radionuclide Components in MW	4-4	4-17
Chapter 5		
Health and Safety		
General	5-1	5-1
Responsibilities	5-2	5-1
Site Safety and Health Plan	5-3	5-1
Designated Personnel	5-4	5-1
Worker Health and Safety	5-5	5-1
References	5-6	5-1
Chapter 6		
Characterization Methods		
Introduction	6-1	6-1
Measurement of Beta Radiation	6-2	6-1
Measurement of Alpha Radiation	6-3	6-2
Measurement of Gamma and X-rays	6-4	6-5
Nonintrusive Drum Imaging Techniques	6-5	6-5
Chapter 7		
Collection and Handling of Low-Level Radioactive Waste		
Introduction	7-1	7-1
Drum Handling	7-2	7-1
Excavation of Contaminated Soils	7-3	7-1
Excavation of Contaminated Sediments	7-4	7-2
Removal or Isolation of Contaminated Groundwater	7-5	7-2
Decontamination of Equipment	7-6	7-4

Subject	Paragraph	Page
Chapter 8		
Treatment of Low-Level Radioactive Waste		
Introduction	8-1	8-1
Volume Reduction of Solids	8-2	8-1
Decontamination of Solid Surfaces and Equipment	8-3	8-9
Solid-Liquid Separation	8-4	8-17
Immobilization	8-5	8-22
Chapter 9		
Final Waste Form Requirements of Low-Level Radioactive Waste		
10 CFR 61 Requirements	9-1	9-1
NRC Requirements	9-2	9-1
Chapter 10		
Packaging, Transportation, and Labeling of Low-Level Radioactive Waste		
Packaging	10-1	10-1
Transportation and Labeling	10-2	10-3
Chapter 11		
Final Disposal of Low-Level Radioactive Waste		
General Considerations for Planning	11-1	11-1
Commercial Offsite Facilities	11-2	11-1
Site Selection	11-3	11-3
Planned Future Disposal Sites	11-4	11-4
Chapter 12		
Treatment and Disposal of Mixed Wastes		
General Approaches	12-1	12-1
Approach to Treatment Technique Selection	12-2	12-2
Techniques for Treating Hazardous Waste Components	12-3	12-3
Appendix A		
References		
Appendix B		
Glossary		
Appendix C		
Vendors		

Chapter 1
Introduction

1-1. Purpose

The purpose of this Engineer Manual is to provide specific technical and engineering guidance to personnel for the collection, handling, treatment, and disposal of low-level radioactive wastes (LLRW) and mixed radioactive and hazardous wastes (MW). It is intended to supplement the general management guidelines contained in Engineer Manual (EM) 1110-35-1, "Management Guidelines for Low-Level Radioactive Waste (LLRW) and Mixed Waste (MW) Site Remediation" and EM 1110-1-502, "Technical Guidelines for Hazardous and Toxic Waste Treatment and Cleanup Activities."

1-2. Applicability

This manual applies to all HQUSACE elements and all USACE Divisions and Districts whose work involves low-level radioactive wastes and mixed wastes.

1-3. References

Required and related references cited in this manual are listed in Appendix A.

1-4. Background

The U.S. Army Corps of Engineers has a long history of service to the nation, but Corps programs have changed dramatically in recent years. During the 1980s, the Corps began to take on numerous aspects of the job of providing engineering expertise for environmental cleanups at many federal facility sites. These federal facility sites, most of which were under the control of the Department of Energy (DOE) or the Department of Defense (DoD), have been contaminated by a wide variety of hazardous wastes, including radioactive waste. Much of the contamination occurred in the 1940s, 1950s, and 1960s, when actions of federal agencies and their contractors met the regulatory requirements at the time and were not thought to pose any risk to the public or the environment. However, these actions are now being governed by the laws of the 1970s and 1980s, and are being judged by the standards of practice of the 1990s. In addition, during wartime and the pressures of the cold war, national security assumed a higher priority than environmental protection, and practices were allowed that would not be allowed today. The public, acting through its representatives in Congress, has decided that this situation should be remedied, and the remediation of contaminated sites has become a very large federal program.

1-5. Scope

a. The cleanup of a site contaminated with radioactive waste materials can be a long and involved process. It starts with a general survey and characterization study of the area, followed by a feasibility study, and proceeds through evaluation of various technical alternatives for cleanup, volume reduction, waste handling, temporary storage, transportation, and permanent disposal.

b. This manual focuses on the evaluation of alternatives for low-level and mixed radioactive waste collection, handling, treatment, volume reduction, packaging, temporary storage, and transportation. The various types of disposal facilities are described briefly in order to demonstrate how different types of disposal practices influence the requirements for treatment, volume reduction, packaging, and transportation. Technologies that have been proven to work satisfactorily and have been demonstrated in full-scale operations, either in the United States or in Europe, are presented. Some technologies are included in the discussion because many promising treatment technologies are emerging in the demonstration stages.

c. Enough background and fundamentals are given in each section to enable the reader to understand the material provided, but extensive discussion of theory is not included. References are provided to other documents and works where the reader can find such material. Legal and administrative aspects are covered only briefly. If more detailed information is necessary, it should be obtained through Office of Counsel or from regulatory offices within the Corps.

d. Overall management guidelines for LLRW and MW site remediation are given in EM 1110 -35-1 to include procedures for Comprehensive Environmental Response, Compensation, and Liability Act (CERCLA) and Resource Conservation and Recovery Act (RCRA) investigations, health and safety considerations, data quality management, and quality assurance/quality control measures. The guidance contained in EM 1110-35-1 is applicable to the treatment and handling procedures described in this manual in the broader context of site remediation.

1-6. Coordination of DoD LLRW Disposal with IOC

a. DoD has officially designated the Department of the Army (DA) as the DoD Executive Agent for managing disposal of DoD's LLRW. These requirements are not binding on projects not involving DoD LLRW. The DA has delegated this responsibility to the U.S. Army Industrial Operations Command (IOC). IOC will perform the following services:

(1) Provide LLRW disposal services on a cost-reimbursable basis for the DoD components.

(2) Maintain central inventory of all LLRW disposed of through the DoD program and foster relationships with licensing agencies and compacts on behalf of the DoD LLRW program.

(3) Provide guidance to installations for management, storage, and disposal of LLRW.

(4) Maintain records necessary to demonstrate that all DoD LLRW is disposed of properly.

(5) Maintain a current compilation of federal and state LLRW disposal requirements.

(6) Report to the Deputy Under Secretary of Defense (Environmental Security) within 90 days after the close of each fiscal year the status of DoD's LLRW program, with a copy furnished to each DoD component.

b. USACE has responsibilities with regard to the Defense Environmental Restoration Program (DERP) and the Base Realignment and Closure Program. However, installation commanders may determine the appropriate contractual mechanisms to manage and dispose of LLRW generated by remediation activities associated with RCRA actions or DERP activities. Commanders may utilize LLRW disposal mechanisms available within USACE or IOC, or other mechanisms, as appropriate.

c. USACE must coordinate all LLRW disposal actions with IOC in order to ensure that appropriate records are maintained and reported. Therefore, all USACE elements must coordinate and report all LLRW potential projects and activities to the USACE HTRW-CX, (Omaha, NE 68144-3869). The USACE HTRW-CX will handle all USACE coordination with IOC.

d. In order to ensure that this is accomplished, all scopes of work or disposal plans that require or describe disposal of LLRW shall be submitted to the HTRW-MC for technical review. This review process is to assure that all requirements are being addressed and to provide guidance on disposal options. These documents need to be submitted as early in the planning stage as possible, to assure that a disposal mechanism is available and to avoid delays in the project. In addition, all requests for coordination with IOC shall be routed through the HTRW-CX after scopes of work or disposal plans have been reviewed. The HTRW-CX will provide assistance in coordination with IOC. The HTRW-CX will keep an inventory of all military and nonmilitary projects requiring disposal of LLRW and may request additional information as to the type and volumes of waste requiring disposal, and the proposed disposal or storage facility. Through an existing Inter-Service Support Agreement with IOC, the Corps can request disposal-related services from IOC. However, all such requests must be directed through the USACE HTRW-CX.

Chapter 2
Definitions and Effects

2-1. Radioactivity

a. General information

(1) Nuclear processes. Radioactivity is the process in which an unstable nucleus of an atom decays to a more stable state, with a lower energy level, and radiates energy in the process. This energy is the energy difference between the unstable and stable nuclear states and is emitted as either particles with kinetic energy, such as alpha particles (two protons and two neutrons), beta particles (electrons), neutrons, or photons (gamma rays). These types of radiation are called ionizing radiation because the energetic particles or rays which are emitted have enough energy to, directly or indirectly, eject orbital electrons from atoms or molecules, thereby converting them to positive ions.

(2) Natural radioactivity. Many elements in the earth's crust are naturally radioactive, and others are made radioactive (unstable) by being exposed to radiation (energy) from another source. Some elements exist naturally in different forms, known as isotopes, each with the same number of electrons and protons, but with different numbers of neutrons in the nucleus. An example is hydrogen, with the stable ^{1}H and the unstable (radioactive) ^{3}H, which decays to stable ^{3}He with the emission of an electron.

(3) Beta decay. Tritium is an example of beta decay, in which an ordinary electron is ejected from the nucleus of an unstable atom. The electron is formed when a neutron transforms into a proton. Beta decay occurs among isotopes with a surplus of neutrons. Another example of beta decay is the decay of Cobalt-60 to Nickel-60 with the emission of beta particles and gamma rays.

(4) Alpha decay. An alpha particle is a positively charged assembly of two protons and two neutrons. This configuration is identical to the nucleus of the helium atom. An alpha particle is emitted from the nucleus of a radioactive isotope when the neutron-to-proton ratio is too low, and this occurs mainly in elements with atomic numbers greater than 82 (lead). An example of alpha decay is the decay of Uranium-235 to Thorium-23 1, which produces an alpha particle and gamma rays.

(5) Gamma decay. A photon (gamma ray) is emitted in gamma decay, which typically accompanies both beta and alpha decay, as is shown in the examples above.

(6) Activity. The traditional unit for the activity, or rate of decay, of a radioactive material is the curie (Ci), which is 3.7 x 1010 disintegrations per second (alps). The modem Systeme Internationale d'Unites (SI) unit is the becquerel (Bq), which is equivalent to 1 dlps. It is impossible to predict when a given single unstable atom will decay. It is a random process. However, each isotope has a certain tendency to decay, depending on how unstable it is. The overall average rate of decay of a large mass of an isotope containing billions and billions of atoms can be measured.

(7) Activity equations. The rate of decay of unstable atoms is proportional to the number of unstable atoms present, so a given fraction of the total unstable atoms of the mass will decay in a given time period. Thus,

$$N_t = N_o e^{-\lambda t} \tag{2-1}$$

where

N, = number of unstable atoms of the isotope present after time, *t* (unitless)

No = initial number of unstable atoms of the isotope (unitless)

λ = decay rate constant (1/time)

t = time (time can be in any units as long as they are consistent)

(8) Half-1ife. The fact that radioactive decay is proportional to the number of unstable atoms present means that first-order kinetics hold, and an exponential rate can be used to describe it. The relationship most commonly used is the concept of half-life. Since certain fractions of a given isotope always decay in a given time, one half of a mass of an isotope always decays in the same time, no matter how much is present. This time is called the half-life. It varies from isotope to isotope and ranges from instantaneous to millions of years. The half-life is *0.693/k,* where *k* is the decay rate constant *(0.693* is the in of 2).

Example:

If a mass of an isotope has a half-life of 10 years and an activity of 64 Bq at time zero, the activity will be as follows:

32 Bq in 10 years
16 Bq in 20 years
8 Bq in 30 years
4 Bq in 40 years
2 Bq in 50 years
1 Bq in 60 years

b. Units and measurements.

(1) Dosimetry. The ionizing radiation from a radioisotope can damage living tissue. Thus, a system has been devised to measure and quantify the radiation that interacts with tissue. This system is known as radiation dosimetry and involves the quantities of exposure, absorbed dose, dose equivalent, and effective dose equivalent.

(2) Exposure. Exposure is defined as the amount of x- or gamma radiation absorbed per unit mass of air. Radiation is measured by electric charge per unit mass, Coulombs (C) per kilogram of air. There is no SI unit for exposure. The unit formerly used for exposure is the Roentgen (R), which is equivalent to 2.58 x 10^{-4} C/kg air (88 ergs/gin).

(3) Absorbed dose. The absorbed dose is the mean energy imparted by ionizing radiation per unit mass of material. The SI unit for absorbed dose is the gray (Gy), which is equal to an absorbed dose of 1 Joule/kilogram (100 rads). The rad (radiation absorbed dose) was previously used as a measure of the dose of any ionizing radiation to the body tissues in terms of the energy absorbed per unit of mass tissue. One rad is the dose corresponding to the absorption of 100 ergs/gin of tissue.

(4) Quality factor. Biologically, the type of radiation is important as well as the amount. Each type of ionizing radiation has an associated quality factor *(Q)* which describes the rate at which the emitted particle deposits its energy when traveling through matter. Thus, the quality factor is a modifying factor for the amount of ionization produced by a given amount of each type of ionizing radiation. An alpha particle is large, heavy, and doubly charged, and it deposits its energy quickly. Therefore, it is assigned a quality factor of 20. Gamma rays (including x-rays) and beta rays are assigned a quality factor of 1. High-energy protons and neutrons of unknown energy both have a quality factor of 10. These factors are summarized in Table 2-1.

Table 2-1
Quality Factors and Absorbed Dose Equivalences

Type of Radiation	Quality Factor Q	Absorbed Dose Equal to a Unit Dose Equivalent[1]
X-, gamma, or beta radiation	1	1
Alpha particles, multiple-charged particles, fission fragments and heavy particles of unknown charge	20	0.05
Neutrons of unknown energy	10	0.1
High-energy protons	10	0.1

[1] Absorbed dose in rad equal to 1 rem, or the absorbed dose in gray equal to 1 sievert. Source: 10 CFR 20 (Federal regulations are listed in Appendix B, Section B-3, "Bibliography of Regulatory Documents.")

(5) Dose equivalent. The dose equivalent (H_T) is the product of the absorbed dose in tissue in rads or grays *(D)*, quality factor *(Q)* (unitless), and all other necessary modifying factors at the location of interest *(N)* (unitless). The dose equivalent can be represented by the following equation:

$$H_T = DQN \tag{2-2}$$

The special unit for dose equivalent is the rem, roentgen Equivalent man, which is equal to the absorbed dose in rads multiplied by the quality factor and other modifying factors.

The rem is a measure of the dose of any ionizing radiation to body tissues in terms of its estimated biological effect relative to a dose of one roentgen of x-rays. The SI unit is the sievert (Sv) which is equal to the absorbed dose in grays multiplied by the quality factor and other modifying factors (1 Sv = 100 reins).

(6) Committed, deep, and eye dose equivalents. The committed dose equivalent $(H_{T,50})$ means the dose equivalent to organs or tissues of reference *(T)* that will be received from the intake of radioactive material by an individual during the 50-year period following the intake. The deep-dose equivalent (H_d), which applies to external whole-body exposure, is the dose equivalent at a tissue depth of 1 cm (1,000 mg/cm^2). The shallow-dose equivalent (H_s), which applies to external exposure

of the skin or an extremity, is taken as the dose equivalent at a tissue depth of 0.007 cm (7 *mg/cm²*) averaged over an area of 1 cm^2. Eye-dose equivalent applies to the external exposure of the lens of the eye and is taken as the dose equivalent at a tissue depth of 0.3 cm (300 - mg/cm^2).

(7) Effective dose equivalent. Different organs have differing sensitivities to radiation. The effective dose equivalent (H_E) is the sum of the products of the dose equivalent to an organ or tissue in rem or Sv (H_T) and the weighting factors (W_T) applicable to each of the body organs or tissues that are irradiated.

$$H_E = \sum W_T H_T \tag{2-3}$$

Effective dose equivalents have the same units as dose equivalents which are Sv and rem.

(8) Committed and total effective dose equivalents. The committed effective dose equivalent in rem or Sv ($H_{E,50}$) is the sum of the products of the weighting factors applicable to each of the body organs or tissues that are irradiated and the committed dose equivalent to these organs or tissues.

$$H_{E,50} = \sum w_T H_{T,50} \tag{2-4}$$

The total effective dose equivalent (TEDE) in rem or Sv means the sum of the deep-dose equivalent (for external exposures) and the committed effective dose equivalent (for internal exposures).

$$TEDE = H_d + H_{E,50} \tag{2-5}$$

(9) Weighting factors, maximum TEDEs, and units. The organ dose weighting factors can be found in Table 2-2, and the maximum effective dose equivalents can be found in Table 2-3. Table 2-4 is a summary of the units explained in the previous discussion. The International Commission on Radiation Protection (ICRP) has recommended new limits and definitions for the values discussed above in the ICRP 60 publication (ICRP 1990). These values have been indicated in parentheses.

c. Effects of radiation exposure.

(1) Direct and indirect effects. Ionizing radiation may affect the human body either directly, by ionizing atoms or molecules, or indirectly, by the production of free radicals and hydrogen peroxide in the water of body fluids. The direct effect is the mutation of a cell, while the indirect effect is toxicity from the free radicals. Thus, the damage from radiation overexposure can manifest itself in numerous ways.

(2) Acute and chronic doses. Effects from overexposure also depend upon the amount and length of exposure. An acute exposure is a single exposure to a high dose of radiation in a short period of time. Biological effects from an acute exposure will appear relatively soon for doses greater than 50 reins. A chronic exposure is a repeated or prolonged exposure so as to lead to a cumulative effect, and the effects may not be apparent for years.

Table 2-2
Organ Dose Weighting Factors

Organ or Tissue	W_T[1]	ICRP 60
Gonads	0.25	(0.20)
Breast	0.15	(0.05)
Red Bone Marrow	0.12	(0.12)
Lung	0.12	(0.12)
Thyroid	0.03	(0.05)
Bone Surfaces	0.03	(0.01)
Colon[2]		(0.12)
Stomach[2]		(0.12)
Bladder[2]		(0.05)
Liver[2]		(0.05)
0esophagus[2]		(0.05)
Skin[2]		(0.01)
Remainder (no more than 0.06 for any single organ)	0.303	(0.05)[4]
Whole Body	1.005	

[1] From 10 CFR 20, dated January 1, 1993.
[2] These organs are not assigned separate tissue weighting factors under 10 CFR 20.
[3] 0.30 results from 0.06 for each five "remainder" organs (excluding the skin and lens of the eye) that receive the highest doses.
[4] The remainder is composed of the following additional tissues and organs: adrenals, brain, upper large intestine, small intestine, kidney, muscle, pancreas, spleen, thymus, and uterus.
[5] For the purpose of weighting the external whole body dose, a single weighting factor, $W^T = 10$, has been specified. The use of other weighting factors for external exposure will be approved on a case-by-case basis until such time as specific guidance is issued.

Table 2-3
10 CFR Dose Limits

1. Occupational
A. Annual limit (more limiting 09.
1. Total effective dose equivalent of 5 reins (0.05 Sv), or 2. Sum of deep-dose equivalent and the committed dose equivalent to any individual organ or tissue other than lens of the eye of 50 reins (0.5 Sv)
B. Annual limits to lens of the eye, to the skin, and to the extremities. which are
1, An eye dose equivalent of 15 reins (0.15 Sv), and 2. A shallow-dose equivalent of 50 reins (0.50 Sv) to the skin or to any extremity.
C. Annual limit to minors is 10 percent of that for adult workers.
II. Members of the Public
A. The total effective dose equivalent does not exceed 0.1 rem (1 mSv) per year (exclusive of dose from sanitary sewerage).
B. Dose in any unrestricted area from external source does not exceed 0.002 rem (0.02 mSv) in any one hour,
C. May apply for NRC authorization for an annual dose 0.5 rem (5 mSv).

(3) Effects of acute doses. The probable early effects of acute whole-body radiation dosages are summarized by Lamarsh in Table 2-5 (Lamarsh 1983).

(4) Carcinogenic effects. Delayed effects can be the result of an acute or chronic overexposure. Carcinogenic effects of radiation on the bone marrow, breast, thyroid gland, lung, stomach, colon, ovary, and other organs reported for the A-bomb survivors of Hiroshima and Nagasaki are similar to findings reported for other irradiated human populations. With few exceptions, however, the effects have been observed only at relatively high doses and dose rates. Studies of populations chronically exposed to low-level radiation, such as those residing in regions of elevated natural background radiation, have not shown consistent evidence of an associated increase in the risk of cancer.

(5) Genetic effects and life shortening. Ionizing radiation damages the genetic material in reproductive cells and results in mutations that are transmitted from generation to generation. However, genetic effects of radiation exposure in man have not been demonstrated at the present time. Radiation has been found to be mutagenic in all organisms studied so far, and there is no reason to suppose that humans are exempt from radiation's mutagenic effects. Life shortening by increasing the rate of physiological aging is another effect that has been demonstrated in animals but not in humans. Detectable injury of the lens of the eye can result from a dose of as low as 1 Gy, depending on the dose rate and length of exposure time (LET) of the radiation. However, the threshold for a vision-impairing cataract under conditions of highly protracted exposure is thought to be no less than 8 Sv. This dose exceeds the amount of radiation that can be accumulated by the lens through occupational exposure to irradiation under normal working conditions and greatly exceeds that which is likely to be accumulated by a member of the general population through other types of exposure.

(6) In utero exposure effects. Children in utero are extremely susceptible to the effects from radiation exposure. Thus, a female worker who becomes pregnant should immediately notify her employers and remove herself from any potentially harmful situations.

(7) Possibility of new standards. There exists the possibility of modifications of the standards for the protection of human health due to new data gathered from the former Soviet Union. Preliminary, unreviewed data from the chronic internal and external exposures to beta-gamma radiation by whole populations affected by discharges from the Chelyabinsk complex, in contrast to the acute, neutron-gamma external exposure of the Japanese population, would indicate lower responses by a factor of 3 to 5. In addition, new interpretations of Japanese data have recently been formulated that may develop into new standards .

(8) Shielding requirements. Most external radiation exposures result from being unprotected or underprotected from the ionizing radiation. The proper amount of shielding can be determined by a trained health physicist and should be used at all times.

(a) Alpha shielding. Alpha particles are a unique type of radiation because they travel such short distances. The dead outer layer of skin is thick enough to absorb external alpha radiations. They are dangerous because, if they were to be ingested, inhaled, or absorbed by the skin, all of their energy would be deposited in living tissue in a localized region of the body, which might lead to cancer.

Table 2-4
Units for Health Physics

Concept	Special Unit Si Unit	Symbol	Definition	Conversion
Activity	Curie	Ci	3.7×10^{10} dps[1]	1 Ci = 3.7×10^{10} Bq
	Becquerel	Bq	1 dps[1]	1 Bq = 2.7×10^{-11} Ci
Exposure	Roentgen or charge/mass	R	2.58×10^{-4} C/kg air[1]	1 R = 2.58×10^{-4} C/kg air[1]
	Air			
	Charge/mass air'	C/kg[1]	1 Coulomb/kg air	1 C/kg = 3,876 R[1]
Absorbed	Energy/mass matter	rad	100 erg/g or	1 rad = 0.01 Gy
Dose			0.01 joule/kg matter	
	Gray	Gy	1 joule/kg matter	1 Gy = 100 rad
Dose	Roentgen	rem	(Abs. dose) (Q)[1] or	1 rem = 0.01 Sv
Equivalent	Equivalent man		0.01 joule (Q)/kg matter	
	Sievert	Sv	1 joule (Q)[1]/kg matter	1 Sv = 100 rem
Effective	Roentgen	rem	(Abs. dose) (Q)(W^T)[1] or	1 rem = 0.01 Sv
Dose Equivalent	Equivalent man		0.01 joule (Q)(LW^T)/kg matter	
	Sievert	Sv	1 joule (Q)(W^T)[1]/kg matter	1 Sv= 100 rem

[1] dps = disintegration per second; C = coulomb; Q = quality factor; W^T = organ weighting factor.
[2] There is no SI unit for exposure. Exposure is still expressed in Roentgens or in C/kg of air exposed.

Source: Stewart (1985)

Table 2-5
Probable Early Effects of Acute Whole-Body Radiation Doses[1,2]

Acute dose (rems)	Probable Observed Effect
5 to 75	Chromosomal aberrations and temporary depression of white blood cell levels in some individuals. No other observable effects.
75 to 200	Vomiting in 5 to 50 percent of exposed individuals within a few hours, with fatigue and loss of appetite. Moderate blood changes. Recovery within a few weeks for most symptoms.
200 to 600	For doses of 300 reins or more, all exposed individuals will exhibit vomiting within 2 hours or less. Severe blood changes, with hemorrhage and increased susceptibility to infection, particularly at the higher doses. Loss of hair after 2 weeks of doses over 300 reins. Recovery from 1 month to a year for most individuals at the lower end of the dose range; only 20 percent survive at the upper end of the range.
600 to 1,000	Vomiting within 1 hour. Severe blood changes. hemorrhage, infection, and loss of hair. From 80 to 100 percent of exposed individuals will succumb within 2 months; those who survive will be convalescent over a long period.

[1] The whole-body doses given in this table are those measured in soft tissue near the body surface; because of energy absorption in the body, the interior (or vertical midline) doses, which are sometimes quoted, are about 70 percent of the values in the table.
[2] Lamarsh (1983).

(b) Beta, gamma, and neutron shielding. Beta rays can easily be stopped by a few centimeters of plastic. However, when stopped by high-atomic number (Z) shielding, beta rays produce Bremsstrahlung x-rays, which can be highly penetrating. This effect is minimized by first using a low atomic number shield, such as plastic, to stop the beta rays, and then a high atomic numbered material, such as lead, to reduce the x-ray intensity to an acceptable level. X-rays and gamma rays can also be effectively attenuated by high atomic numbered lead, iron, and concrete. Neutrons can be effectively shielded by low Z materials such as water or paraffin.

2-2. Radioactive Waste Definitions

a. Low-level radioactive waste.

(1) Legal definition. As given in the Low-Level Radioactive Waste Policy Act, Public Law 96-573, low-level radioactive waste is defined as

> "...radioactive waste not classified as high-level radioactive waste, transuranic waste, spent nuclear fuel, or by-product materials as defined in Section 11 e(2) of the Atomic Energy Act (uranium and thorium tailings and wastes)."

Thus, (a) high-level radioactive waste, (b) transuranic waste, (c) spent nuclear fuel, and (d) by-product materials need to be defined.

(a) High-level radioactive waste means the highly radioactive material resulting from the reprocessing of spent nuclear fuel, including liquid waste produced directly in reprocessing and any solid material derived from such liquid waste that contains fission products in sufficient concentrations. High-1evel radioactive waste also includes other highly radioactive material that the Commission, consistent with existing law, determines by rule requires permanent isolation.

(b) Transuranic waste means waste containing more than 100 nanocuries of alpha-emitting transuranic isotopes, with half-lives greater than 20 years, per gram of waste, except for:

- High-level radioactive waste.
- Wastes that the Department has determined, with the concurrence of the Administrator, do not need the degree of isolation required by this part.
- Wastes that the Commission has approved for disposal on a case-by-case basis in accordance with 10 CFR 61.

(c) Spent nuclear fuel is fuel that has been withdrawn from a nuclear reactor following irradiation, the constituent elements of which have not been separated by reprocessing.

(d) By-product material means:

- Any radioactive material (except special nuclear material) yielded in or made radioactive by exposure to the radiation incident to the process of producing or utilizing special nuclear material.

- Tailings or wastes produced by the extraction or concentration of uranium or thorium from any ore processed primarily for its source material content.

(2) Regulatory definition. In 10 CFR 61, "Licensing Requirements for Land Disposal of Radioactive Waste" (low-level waste only), the definition states that "waste means those low-level radioactive wastes containing source, special nuclear, or by-product materials that are acceptable for disposal in a land disposal facility. For purposes of this definition, low-level waste has the same meaning as in the LLRWPA." Thus, source material and special nuclear material now need to be defined as given in 10 CFR 20.

"Source material" means--

(a) Uranium or thorium or any combination of uranium and thorium in any physical or chemical form; or

(b) Ores that contain, by weight, one-twentieth of 1 percent (0.05 percent), or more, of uranium, thorium, or any combination of uranium and thorium. Source material does not include special nuclear material.

"Special nuclear material" means--

(a) Plutonium, uranium-233, uranium enriched in the isotope 233 or in the isotope 235, and any other material that the Commission, pursuant to the provisions of section 51 of the Act, determines to be special nuclear material, but does not include source material; or

(b) Any material artificially enriched by any of the foregoing (does not include source material).

(3) Class designations. Once a radioactive waste has been determined to be low-level, it must be classified as Class A, B, or C. Low-level wastes are divided by 10 CFR 61 into these three classes based upon their long-lived and short-lived constituents. Numerical limits for Class A, B, and C low-level wastes are determined by the concentrations of long-lived radionuclides, as shown in Table 2-6, and concentrations of short-lived radionuclides, shown in Table 2-7.

Table 2-6
Lena-Lived Material

Radionuclide	Concentration
C-14	8 Ci/m^3
C-14 in activated metal	80 Ci/m^3
Ni-59 in activated metal	220 Ci/m^3
Nb-94 in activated metal	0.2 Ci/m^3
Tc-99	3 Ci/m^3
1-129	0.08 Ci/m^3
Alpha-emitting, transuranic nuclides with half-life >5 yr	100 nCi/g
Pu-241	3,500 nCi/g
Cm-242	20.000 nCi/a

Table 2-7
Short-Lived Material

	Concentration, Ci/m^3		
Radionuclide	Column 1	Column 2	Column 3
Total of all nuclides with half-life <5 yr[1]	700		
H-3[1]	40		
CO-60[1]	700		
Ni-63	3,5	70	700
Ni-63 in activated metal	35	700	7,000
Sr-90	0.04	150	7,000
Cs-137	1	44	4,600

[1] There are no limits established for these radionuclides in Class B or C wastes. Practical considerations such as the effects of external radiation and internal heat generation on transportation, handling, and disposal will limit the concentrations for these wastes. These wastes shall be Class B unless the concentrations of other nuclides in the table determine the waste to be Class C independent of these nuclides.

(a) Class A Definition. Class A wastes are defined as waste that does not contain sufficient amounts of radionuclides to be of concern with respect to migration of radionuclides, long-term active maintenance, and potential exposures to intruders, and that tends to be stable, such as ordinary trash wastes.

(b) Class B definition. Because of their higher activity level and greater hazard potential, Class B wastes must meet more rigorous disposal requirements for waste form stability than do Class A wastes.

(c) Class C definition. Class C wastes have even greater activity, so they must also meet more rigorous requirements for waste form, and have further restrictions on their burial, such as a minimum depth of 5 m below the top surface of the cover, or with barriers designed to protect against inadvertent intrusion for at least 500 years.

(d) Greater-than-Class C definition. Wastes that do not meet the requirements of Class C for near-surface disposal require waste forms and disposal methods that are different and in general more stringent than those specified for Class C waste. Wastes that are considered greater than Class C wastes are now treated as high-level wastes and, thus, do not fall under the scope of this EM.

(e) Use of Table 2-6 for class designations. The following are the guidelines for using Tables 2-6 and 2-7 to identify the class designation of low-level radioactive waste. If a waste contains only those radionuclides listed in Table 2-6, it is classified as follows:

If the concentration does not exceed 0.1 of the value in Table 2-6, it is Class A waste.

If the concentration exceeds 0.1 of the value, but is less than the value in Table 2-6, it is Class C waste.

If it exceeds the concentration in Table 2-6, the waste is not generally acceptable for near-surface disposal.

For mixtures of long-lived Table 2-6 wastes, the standard sum of the ratios of the concentration of each of the contained wastes to the concentrations in the table shall not exceed the limits indicated above.

(f) Use of Table 2-7 for class designations. If the wastes do not contain any of the long-lived radionuclides listed in Table 2-6, then they are classified by the short-lived radionuclides in Table 2-7, as follows:

If the concentrations do not exceed those listed in Column 1, the waste is Class A.

If the concentrations are greater than those in Column 1, but equal to or less than those in Column 2, the waste is Class B.

If the concentration is greater than the values in Column 2 and equal to or less than those in Column 3, the waste is Class C.

If the concentrations are greater than those in Column 3, the waste is not generally acceptable for near-surface disposal.

If the wastes contain a mixture of Table 2-7 short-lived radionuclides, the sum of the fractions of the concentration of each of the contained wastes to the concentrations in the table shall not exceed the limits indicated above.

(g) Mixtures of Table 2-6 and 2-7 wastes. If the waste contains a mixture of Table 2-6 and Table 2-7 wastes, then the following applies.

If the waste is classified as Class A by Table 2-6, the classification shall be determined by Table 2-7.

If the waste is classified as Class C by Table 2-6, it shall be classified as Class C, provided the concentration of Table 2-7 wastes does not exceed the values in Column 3.

(h) Designation for waste not included in Table 2-6 or 2-7. If the radioactive waste contains only radionuclides not listed in either Table 2.6 or 2.7, then the waste shall be classified as Class A.

(i) Example of class determination. An example of the classification of a waste follows: suppose a waste contained 0.2 Ci/m^3 of ^{14}C, 0.002 Ci/m^3 of ^{90}Sr, and 10 Ci/m^3 of ^{137}Cs. By Table 2-6, the waste is classified as Class A because 0.2 Ci/m^3 of carbon-14 is less than 0.1 of the carbon-14 limit given in Table 2-6. Thus, the determination falls on the Table 2-7 radionuclides.

The comparison concentrations from Column 1 in Table 2-7 are 0.04 Ci/m^3 and 1 Ci/m^3, respectively, for ^{90}Sr and ^{137}Cs. Thus.

$$\frac{0.002}{0.04} + \frac{10}{1} > 1 \qquad (2\text{-}6)$$

and the sum of fractions of the standards in column 1 are greater than 1 and, therefore, the mixture is greater than class A. The standards from Column 2 are 150 Ci/m^3 and 44 Ci/m^3, respectively. Thus, the sum of the fractions is less than 1.

$$\frac{0.002}{150} + \frac{10}{44} < 1 \qquad (2\text{-}7)$$

Thus, the waste would be classified as Class B.

b. Below regulatory concern (BRC) waste.

(1) BRC concept. Many believe that there should be a minimum level of radioactivity needed for waste to be considered low-level radioactive waste for regulatory purposes. The BRC concept defines radiation exposures associated with radioactive waste disposal that are so low that regulation with respect to radiation hazard is not warranted. BRC levels are dependent upon the waste stream, disposal technologies available, and the potential for exposure. BRC levels are designated by conscious decision at values below which the benefits of society outweigh the risk.

(2) Advantages of a BRC level. Since many waste streams are treated as low-level radioactive waste streams because of trace or even only suspected levels of man-made radioactivity, the establishment of a BRC level would allow such wastes to be disposed of in a less restrictive manner, at substantial cost savings, and with minimal risk to the public. A BRC level might also allow some waste streams currently classified as mixed to become hazardous waste streams. However, after the furor of the Nuclear Regulatory Commission (NRC) attempt to promulgate a BRC rule, Congress has forbidden any such rulemaking.

c. *De minim is waste.*

(1) De minimis definition. A de *minimis* dose defines a range of exposure below which health physicists think no quantifiable risks exist. *De minimis* means the least and is an abbreviation for *de minimis non curat lex,* generally translated "the law does not pay attention to the trivial." Unlike BRC levels, *de minimis* levels are generally defined solely in terms of probable mortality for exposed individuals, exclusive of the size of the exposed population and the total number of expected mortalities.

(2) Advantages of de minimis level. The NRC has set *de minimis* levels (0.05 microcuries per gram) for triium and ^{14}C in liquid scintillation fluids and animal carcasses so that they may be disposed of without regard to their radioactivity. If *de minimis* levels could be established for other radionuclides in other wastes, the volume of low-level waste needing disposal would be reduced which would decrease the need for multiple sites, extend operating life of existing sites, result in significant cost savings to generators, and permit resources to be reallocated to better serve our society.

d. Naturally occurring and accelerator-produced radioactive materials (NORM/NARM).

(1) NORM and NARM definitions. Two broad categories of radionuclides not covered under the Atomic Energy Act (AEA) are naturally occurring radionuclides of insufficient concentration to be considered source material and accelerator-produced radionuclides. Materials containing accelerator-produced nuclides are commonly referred to as NARM wastes. NARM are not regulated under the AEA or any other Federal regulation. At the State level, regulation is nonuniform. Recommended regulations for NARM and discrete NORM are similar to those currently required for by-product materials. These wastes are generated from particle accelerators and from naturally occurring radioisotopes, principally uranium, thorium, and radium. Naturally occurring radioactive material (NORM) is the radioactive material in its natural physical state and does not include by-product, special nuclear, or source material. NORM is a subset of NARM.

(2) Discrete wastes. NORM wastes can be further classified as discrete or diffuse. Discrete NORM wastes pertains to small-volume, high-specific-activity sources which might include Radium-sealed sources, certain water treatment ion exchange resins, and certain oil and pipe scale.

(3) Diffuse wastes. Diffuse NORM pertains to large-volume, low-specific-activity sources which were created by processing or technologically enhancing materials originally found in nature that otherwise were in small concentrations of naturally occurring radioactive isotopes. Diffuse NORM may be a product of mineral extraction and mill tailings, oil and gas extraction, coal fly ash and bottom ash creation, phosphate mining, water treatment and some uranium mining residues. According to an Environmental Protection Agency (EPA) report entitled "Low-Level and NARM Radioactive Wastes: Draft Environmental Impact Statement for Proposed Rules, Background Information Document," living next to these sources can produce a 10^{-4} to 10^{-1}

excess lifetime cancer risk (EPA 1988). According to the NRC's 10 CFR 20, Appendix B, Thorium-232 derived air concentrations (DACS) are five times more restrictive than Plutonium-239 DACS.

(4) High concentration NARM wastes. The higher concentration NARM wastes are similar to LLRW. They are either disposed of as such or stored onsite until they decay sufficiently. If the concentration of uranium or thorium exceeds 0.05 percent by weight, the waste is classified as a source material. The lower activity diffuse wastes such as the mine overburden have very low concentrations of radionuclides but are produced in large volumes. Thus, disposal in an LLRW facility is impractical.

2-3. Hazardous Waste Definitions

a. RCRA definition. Hazardous waste is defined in Section 1004(5) of the Resource Conservation and Recovery Act (RCRA) as:

> ... a solid waste, or combination of solid waste, which because of its quantity, concentration, or physical, chemical, or infectious attributes, may: (A) cause, or significantly contribute to, an increase in mortality or an increase in serious irreversible, or incapacitating reversible, illness or (B) pose a substantial present or potential hazard to human health or the environment when improperly treated, stored, transported, or disposed of, or otherwise managed.

b. CERCLA definition. The Comprehensive Environmental Response, Compensation, and Liability Act (CERCLA) of 1980 (Section 101(14)) defines "hazardous substances" as

(A) Any substance designated pursuant to Section 311 (b)(2)(A) of the Federal Water Pollution Control Act.

(B) Any element, compound, mixture, solution, or substance designated pursuant to Section 102 of this Act.

(C) Any hazardous waste having the characteristics identified under or listed pursuant to Section 3001 of the Solid Waste Disposal Act (SWDA) (but not including any waste the regulation of which under the SWDA has been suspended by Act of Congress).

(D) Any toxic pollutant listed under Section 307(a) of the Federal Water Pollution Control Act.

(E) Any hazardous air pollutant listed under Section 112 of the Clean Air Act.

(F) Any imminently hazardous chemical, substance, or mixture with respect to which the Administrator has taken action pursuant to Section 7 of the TSCA.

c. Listed or characteristic wastes. A hazardous waste can be a listed waste and/or a characteristic waste. Listed wastes are wastes that have been listed by EPA in 40 CFR 261 Subpart D and have not been specifically delisted. Characteristic wastes are wastes that exhibit any of the four characteristics for identifying hazardous waste in 40 CFR 261 Subpart C which are ignitability, corrosivity, reactivity, and toxicity characteristic leaching procedure (TCLP) toxicity. The procedures or tests to determine if a waste exhibits these characteristics are discussed in 40 CFR 261, Subpart C.

d. Classes of hazardous wastes. The major classes of hazardous wastes are volatile organic compounds (VOCs), semivolatile organic compounds (SVOCs), and metals. Hazardous materials that may contact radioactive material and end up as a mixed waste include cleaning solutions, solvents, oils, lead, and cadmium. The deregulation of liquid scintillation fluids in 1981 (10 CFR 20.306) eliminated a major contributor to the mixed waste stream.

2-4. Mixed Waste Definitions

a. Definition of mixed waste. Mixed wastes are those wastes that contain radioactive materials at concentrations equivalent to low-level wastes and also contain hazardous waste materials (listed and/or characteristic) and are subsequently subject to regulation by both the EPA and the NRC. Joint NRC and EPA guidance issued on January 8, 1987 titled "Guidance on the Definition and Identification of Commercial Mixed Low-Level Radioactive and Hazardous Waste and Answers to Anticipated Questions," contains the following definition (NRC-EPA 1987):

> Mixed Low-Level Radioactive and Hazardous Waste (Mixed LLRW) is defined as waste that satisfies the definition of low-level radioactive waste (LLRW) in the Low-Level Radioactive Waste

Policy Amendments Act of 1985 (LLRWPAA) and contains hazardous waste that either (1) is listed as a hazardous waste in Subpart D of 40 CFR Part 261 or (2) causes the LLRW to exhibit any of the hazardous waste characteristics identified in Subpart C of 40 CFR Part 261.

b. Regulatory oversight of mixed waste

(1) Hazard potential. The applicable laws and regulations leading to this dual control by two separate federal agencies will be discussed in more detail in the next section of this manual. 10 CFR 20.2007 requires generators of radioactive waste to also comply with any other regulations governing any other toxic or hazardous properties of radioactive wastes. This is important since the half-life of most of the elements in LLRW can be measured in hours or days; of others, in decades or longer. As a result, almost all LLRW decays to harmless levels relatively quickly. After about 300 years, it becomes only as radioactive as natural soil. By comparison, many other potential y hazardous, but nonradioactive, chemical wastes like lead, silver, arsenic, barium, cadmium, chromium, mercury, and selenium do not decay away. Their toxicity remains forever.

(2) Joint jurisdiction. Disposal of hazardous wastes is regulated by the Environmental Protection Agency under RCRA while radioactive wastes are controlled by the NRC under the AEA. If the host state is an agreement state or RCRA approved state, then it may have its own definition of hazardous wastes. It has been necessary to establish consistent dual rules by agreement between agencies. The EPA and NRC provide a formal procedure by which one can decide whether a certain material is mixed waste. It is estimated that only a few percent of low-level wastes are in the category of mixed waste.

(3) Scintillation fluids. Liquid scintillation fluids are used in medical testing to measure radioactive isotopes. Both NRC and EPA allow scintillation fluids to be incinerated. Also, an EPA permit is not needed if the fluid is burned as fuel additive. According to the profile, a significant portion of commercially generated mixed waste may be treated using existing commercial treatment facilities. Because these scintillation liquids are no longer regulated by the NRC, they can be treated according to their composition and chemical hazard.

Chapter 3
Laws and Regulations Affecting Disposal of Low-Level Radioactive Waste and Mixed Waste

3-1. Introduction

Federal agencies and personnel must comply with all regulations to the same extent as private industry and private citizens. Table 3-1 lists the important statutes and executive orders affecting radioactive waste. Table 3-2 lists the important regulations. Relevant laws and regulations are discussed in detail in EM 1110-35-1.

3-2. Importance and Applicability

Use of radioactive materials is one of the most complex and regulated industries in the United States. When radioactive wastes and other types of hazardous wastes occur together as mixed wastes, the complexity of the problems and the regulations increase enormously. However, it is vital that all personnel working on any aspect of planning, design, or operation of a waste cleanup project that involves radioactive waste be familiar with all of the basic requirements of that part of the process. Failure to do so can easily cause serious conflicts with regulatory agencies that might result in significant delays, monetary penalties, including civil penalties and, ultimately, criminal prosecution and criminal fines for the most serious violations.

3-3. Additional Information Sources

One of the best sources of information for personnel dealing with projects involving low-level wastes, in addit ion to the laws and regulations themselves, is the Environmental Guidance Program Reference Books prepared for the Assistant Secretary of the U.S. Department of Energy for Environment, Safety, and Health by the Oak Ridge National Laboratory. They emphasize aspects of the laws and regulations that affect the DOE. They are available, for DOE personnel and contractors, from the DOE Office of Environmental Guidance in Washington, DC. They are extremely useful, and they, or other comparable sources of information, should be available in every office working on a project involving radioactive wastes. These books, as well as the Code of Federal Regulations, contain the complete regulations. The regulations themselves, not just a summary, should be read and studied carefully before beginning work on a project.

Table 3-1
Statutory Authorities for Radiation Protection

LEGISLATION OR EXECUTIVE ORDER
EXECUTIVE ORDER 10831: Executive Order 10831 charges the Administrator of the Environmental Protection Agency to "... advise the President with respect to radiation matters, indirectly affecting health, including guidance for all Federal agencies in the formulation of radiation standards and in the establishment and execution of programs of cooperation with States. " EPA issues its Federal radiation guidance under the Order.
ATOMIC ENERGY ACT, AS AMENDED IAEA): The AEA requires the management, processing, and utilization of radioactive materials in a manner that protects public health and the environment. Reorganization Plan No. 3 of 1970 transferred to EPA responsibility for promulgating generally applicable radiation protection standarda.
COMPREHENSIVE ENVIRONMENTAL RESPONSE, COMPENSATION, AND LIABILITY ACT (CERCLA): CERCLA, as amended, authorizes EPA to act, consistent with the national contingency plan, to provide for remedial action in response to releases or substantial threats of releases of hazardous substances into the environment. Hazardous substances are defined as any substance designated or listed under the Clean Air Act, the Federal Water Pollution Control Act, the Toxic Substances Control Act, and the Resource Conservation and Recovery Act. Because the CAA designated radionuclides as a hazardous air pollutant, the provisions of CERCLA apply to radionuclides.
TOXIC SUBSTANCES CONTROL ACT (TSCA): TSCA regulates the manufacture, distribution in commerce, processing, use, and disposal of chemical substances and mixtures. Materials covered by the AEA are expressly excluded from TSCA. However, naturally-occurring and accelerator produced radionuclides are not.
RESOURCES CONSERVATION AND RECOVERY ACT (RCRA): RCRA provides for detailed regulation of hazardous waste from generation to final disposal. Hazardous waste generators and transporters must comply with EPA standards. Owners and operators of treatment, storage, or disposal facilities must obtain RCRA permits. AEA materials are expressly excluded from the definition of solid waste, and thus from regulation under RCRA. Naturally occurring and accelerator produced radioactive materials, however, are not.
FEDERAL WATER POLLUTION CONTROL ACTION (FWPCA): FWPCA protects the nation's water quality, chiefly through tha use of technology-based effluent limits; the national pollutant discharge elimination system (NPDES) permitting system; pretreatment requirements for industrial discharges; and toxicity based water quality standards. A 1976 Supreme Court opinion held that source, special nuclear, and byproduct material are not subject to the Act. [Other radionuclides would seem to be included inasmuch as radionuclides can be defined as a pollutant.]
CLEAN AIR ACT (CAA): CAA protects and enhances the nation's air quality through national ambient air quality standards, new source performance standards, and other provisions. Radionuclides are a hazardous air pollutant regulated under Section 112 of the Act.
LOW LEVEL RADIOACTIVE WASTES POLICY ACT, AS AMENDED (LLRWPA): LLRWPA assigns States responsibility for ensuring adequate disposal capacity for low-level radioactive wastes generated within their borders.

Table 3-2
Examples of Federal Regulatory Controls

Regulations	Authorizing Statute	Applicability	Standard	Other Applications
		EPA REGULATIONS		
40 CFR-61- National Emission Standards for Hazardous Air Pollutants: Standards for Radionuclides	CAA	Emission standards for eight categories of facilities	10 mrem/yr	Used as an applicable or relevant and appropriate requirement (ARAR) at WPL sites
40 CFR-268-Land Disposal Restrictions	RCRA	Identifies hazardous wastes restricted from land disposal and defines variances to prohibitions	No radioactive waste exception, variance	Describes hazardous waste land disposal restrictions
40 CFR 300- National Contingency Plan (NCP) Supporting Guidance	CERCLA	Organizational structure and procedures for preparing for and responding to discharges of oil and releases of hazardous substances, pollutants, and contaminants	Acceptable risk range of 10^{8} to 10^{1}	Establishes criteria for selecting remediation and goals at national priorities list (NPL) sites
		NRC REGULATIONS		
10 CFR 20- Standards for Protection Against Radiation	AEA	Radiation protection criteria for NC licensed activities	100 mrem/yr, plus ALARA ("AS Low s Is Reasonably Achievable")	State regulations
10 CFR 61- Licensing Requirements for Land Disposal of Radioactive Waste	AEA	Procedures, criteria, and terms and conditions that apply to the issuing of licenses for the land disposal of radioactive waste produced by NRC licenses	25 mrem/yr, plus ALARA	
		PRINCIPAL DOE ORDERS AND REGULATIONS		
DOE Order 5400.4- Comprehensive Environmental Response, Compensation an Liability Act Requirements	AEA	DOE CERCLA policies and procedures as prescribed by the NCP	Acceptable risk range of 10^{6} to 10^{1}	Could be used to establish criteria for selecting remediation goals at other sites
DOE Order 5400.5- Radiation Protection of the Public Environment	AEA	Standards and requirements for operations of DOE and DOE contractors with respect to protection of the public and the environment against undue risk from radiation	100 mrem/yr, plus ALARA	Could be used to set site-specific cleanup goals at other sites
Proposed 10 CFR 834- (Notice of Proposed Rulemaking, 58FR 16268)- Radiation Protection of the Public and Environment	AEA	Proposed standards and requirements for operations of DOE and DOE contractors with respect to protection of the public and the environment against undue risk from radiation	100 mrem/yr, plus ALARA	Could be used to set site-specific cleanup goals at other sites

Chapter 4
Types and Sources of Wastes

4-1. Low-Level Radioactive Wastes

a. Sources.

(1) The three major sources of LLRW are power reactor operations, industrial and institutional activities, and government research and defense activities. The chemical, physical, and radiological characteristics of these wastes vary greatly from source to source. The chart given in Figure 4-1 shows general categories of radioactive wastes with the associated typical physical forms and sources for each category. Commercial nuclear fuel cycle facilities currently account for approximately three-fourths of the waste volume shipped to commercial disposal sites. The DOE generates LLRW through its defense activities, uranium enrichment operations, naval nuclear propulsion, and various research and development activities. The most common radionuclides found in LLRW and their production percentages by generator are given in Table 4-1.

(2) Power reactors produce a variety of both dry and wet LLRW. Exhausted ion exchange resins and sludges result from the treatment of liquid radioactive waste. Trash such as clothing, gloves, paper, equipment, filter cartridges, and activated metals comprise the majority of the dry LLRW produced during reactor operations.

(3) Industrial generators manufacture radionuclides for industrial, bioresearch, medical, and nonbioresearch uses. Table 4-2 shows the composition of industrial and institutional waste by category for 1990.

(4) Institutional generators include hospitals, private medical offices, medical research laboratories, colleges, universities, and research facilities. These wastes include trash, liquid scintillation vials, absorbed aqueous and organic liquids, and biological wastes such as patient excreta and animal carcasses. NARM wastes may also be produced from facilities with accelerators.

(5) The government produces the majority of LLRW; however, DOE is in charge of its own waste and does not fall under the jurisdiction of the NRC but does have to comply with EPA regulations. DOE activities, such as fuel fabrication and reactor operation, spent fuel storage, weapons production, chemical processing, and research and development using radionuclides and accelerators, result in a large volume of LLRW. Some of this waste has been disposed of onsite, and some has been sent to the commercial disposal facilities. Table 4-3 lists the historical annual additions and total volume of LLRW buried displayed by site.

b. Types.

(1) The designation of material as LLRW does not necessarily imply low hazard. Table 4-4 lists radionuclides commonly found in LLRW, their half-lives, principal mode of decay, and daughters. Most of these are beta and gamma emitters, with a small fraction being alpha emitters. These alpha emitters present a higher internal hazard, which is reflected in very low permissible concentration limits. Most of the radionuclides in the list have half-lives less than 100 years. The predominant long-lived radionuclide in non-fuel-cycle waste is ^{3}H. In power production, or fuel-cycle waste, the predominant long-lived nuclides are ^{60}Co, ^{90}Sr, and ^{137}Cs. In the accelerator-produced waste, most of the radionuclides are very short-lived and will decay to acceptable levels if stored for a short time. However, the waste may contain naturally occurring radionuclides such as uranium, thorium, and radium, which are very long-lived.

(2) Waste found at DOE sites has unique characteristics because of the research and development aspects of government work. Table 4-5 lists representative DOE LLRW radionuclide composition by percent activity. Table 4-6 is a summary of radionuclide characteristics for LLRW at DOE sites, and Table 4-7 is a summary of physical characteristics for LLRW at the DOE sites.

4-2. Hazardous Wastes

a. Sources. A material becomes a hazardous waste if it meets the definition of hazardous waste set forth in RCRA and CERCLA. Hundreds of substances are considered hazardous and are generated everywhere from dry cleaning businesses to the DOE and DOD. Hazardous wastes which are of concern in this manual are those that come into contact with radioactive wastes.

b. Types. A hazardous waste can be either a listed waste or a characteristic waste. Listed wastes are wastes that have been listed by EPA in 40 CFR 261 Subpart D and have not been specifically delisted. Characteristic wastes are wastes that exhibit any of the four characteristics for identifying hazardous waste in 40 CFR 261 Subpart C, which are ignitability, corrosivity, reactivity, and toxicity characteristic leaching procedure (TCLP) toxicity. The major classes of hazardous wastes are volatile organic compounds, semivolatile organic compounds, and

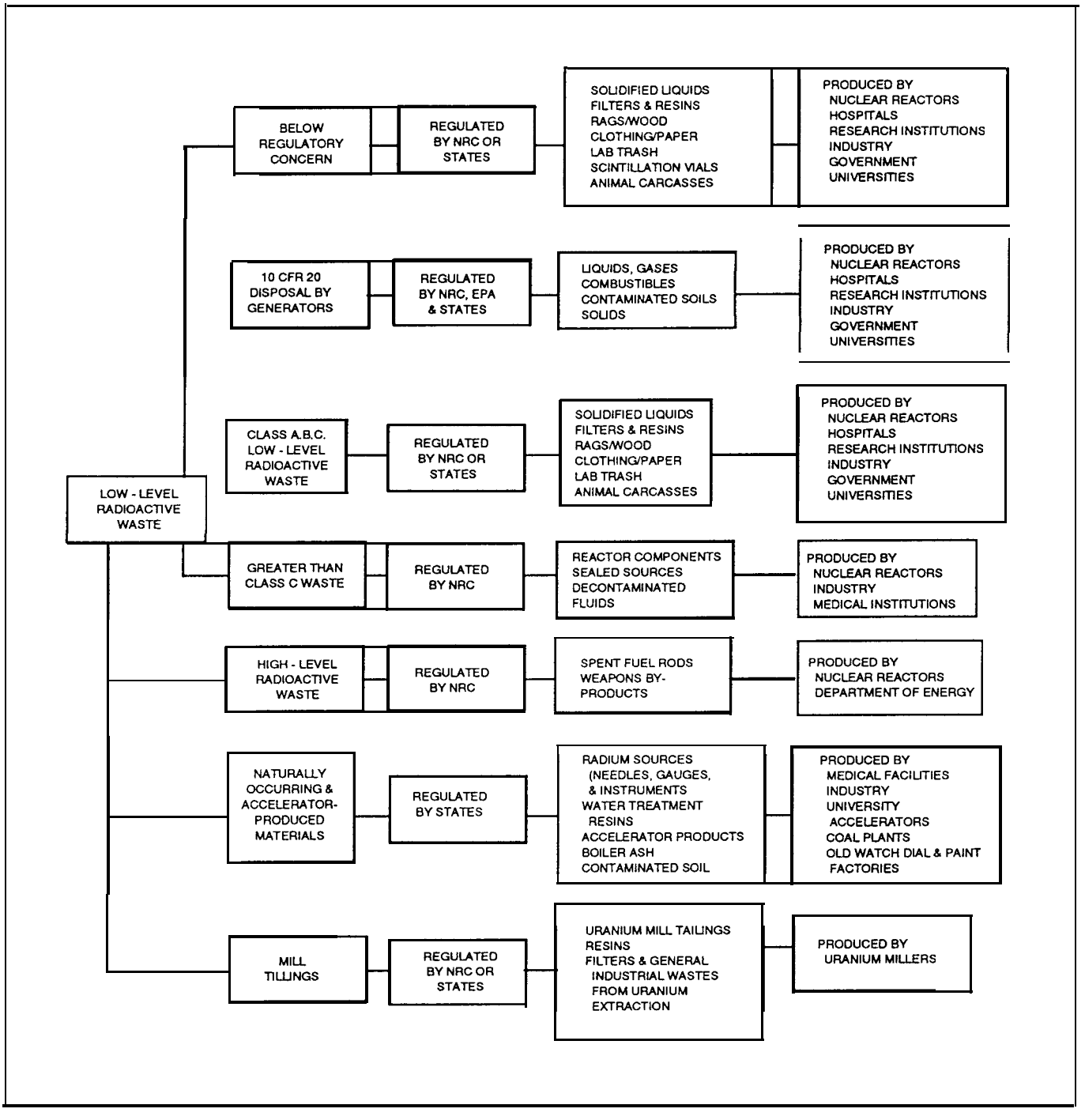

Figure 4-1. Types of reactionless LLRW

Table 4-1
Typical Radionuclides Present in LLRW by Generator

Radionuclide	Half-Life	Activity (%)				
		Fuel Cycle	Industry	Institutional	Clinical	Government
<90 day half-life						
^{99m}Tc	6.0 hours			8	96	
^{99}Mo	66.7			3		
^{21m}Tl	74.0				1-2	-
^{67}Ga	78.1			3	1-2	-
^{131}I	8.1 days			1	0.2	-
$^{32}p^{1}$	14.3			22	-	7
^{66}Rb	18.7			<1	-	7
^{126}I	60.2			9	-	7
^{192}Ir	74.2		7	<1		
$^{33}S^{1}$	88.0		<1	22		7
>90 days and <5 years half-life						
^{134}Cs	2.1 years	18	<1	-	-	-
$^{22}Na^{1}$	2.6		-	<1	-	7
>5 years and <100 years half-life						
^{60}Co	5.3 years	16	1	<1	-	-
$^{3}H^{1}$	12.3	2	88	29	-	55
^{137}Cs	30.0	36	<1	<1	-	-
>100 years half-life						
$^{14}C^{1}$	5,730 years	-	<1	1	-	10
^{99}Tc	210,000	<1	-	2	-	-
Uranium and TRU	$>10^{5}$	-	3	<1	-	-
Mixed fission [1,2]	$>10^{6}$	25	-	-	-	-
Total		98	99	100	100	100

[1] Naturally occurring isolupe.
[2] Mixed fission products include radioactive xenon, krypton, bromine, iodine, tellurium, ruthernium, stronthum, and barium. With the exceptions of ^{129}I, ^{90}Sr, and ^{85}Kr, all have half-lives shorter than one year. Source: Gershey et al. 1990.

metals. Hazardous materials that may end up as a mixed waste include contaminated organic solvents and laboratory liquids, sludges, oils, discarded lead shielding, discarded lined containers, cadmium wastes, and mercury wastes.

4-3. Mixed Wastes

a. Sources.

(1) Mixed LLRW is generated by the same sources as LLRW. Mixed waste arises from processes in which LLRW and hazardous wastes must be combined. Typically, mixed LLRW at DOE sites includes a variety of contaminated materials, such as air filters, cleaning solutions and cleanup materials, engine oils and grease, epoxies and resins, laser dyes, paint residues, photographic materials, soils, asphalts, roofing compounds and wall materials, water treatment chemicals, and decommissioned weapons manufacturing equipment. Figures 4-2 and 4-3 exhibit the total volume inventory of DOE mixed LLRW through 1990 and the volume generation during 1990. Tables 4-8 through 4-10 list the volume inventories of DOE site mixed LLRW, by physical category, through 1990, and Table 4-11 lists the volume

Table 4-2
Composition of Industrial and Institutional Waste by Category[1]

	Composition, %[2]				
		Institutional			
Radionuclide	Industrial	Bioresearch	Medical	Nonbioresearch	Total
^{3}H	6.453E+01	5.286E+01	8.341E+00	8.324E+01	6.319E+01
^{14}C	3.815E-01	2.738E+0	8.107E+00	6.549E+00	4.454E+00
^{22}Na		1.652E-01			2.279E-02
^{32}P	6.340E+00	4.416E+00	7.367E+00		5.316E+00
^{36}Ce		3.239E-02			4.469E-03
^{35}S	5.519E+00	4.294E+00	8.735E-01		5.042E+00
^{45}Ca	8.671E-04	2.242E-02			3.791E-03
^{46}Sc			1.911E-02		2.571E-04
^{51}Cr	1.394E-01	2.775E-01	3.417E-01		1.55OE-01
^{54}Mn	8.052E-02			3.987E-02	6.654E-02
^{55}Fe	2.336E-03	2.092E-03		6.577E-01	3.102E-02
^{57}Co	4.584E-03		6.575E-01		1.252E-02
^{58}Co	2.228E-03	2.318E-02			4.992E-03
^{59}Fe	9.859E-04			1.551E-02	1.473E-03
^{60}Co	3.366E+00			8.230E-01	2.748E+00
^{63}Ni	9.752E-03			5.037E-02	1.006E-02
^{65}Zn	1.196E-03	5.929E-02		1.398E-01	1.482E-02
^{67}Ga			7.758E-02		1.043E-03
^{75}Se	1.341E-02		2.419E-02		1.112E-02
^{85}Kr	4.061E-02				3.267E-02
^{90}Sr	3.310E-01				2.663E-01
^{90}Y	3.310E-01				2.663E-01
^{90}Mo			2.317E+00		3.114E-02
^{99m}Tc			7.023E-01		9.349E-03
^{109}Cd	8.790E-02				7.071E-02
^{111}In	6.475E-04		2.800E-02		8.969E-04
^{113}Sn			2.410E-02		3.240E-04
^{123}I	5.063E-04		2.190E-02		7.016E-04
^{126}I	1.703E+00	9.902E+00	7.064E+01		3.586E+00
^{131}I	1.465E-02	5.452E-01	5.652E-02		8.778E-02
^{133}Ba	2.674E-02				2.151E-02
^{133}Xe			3.828E-02		5.146E-04
^{134}Cs	2.605E-02				2.096E-02
^{137}Cs	6.008E+00	1.230E-02		1.250E+00	4.892E+00
^{137m}Ga	5.687E+00	1.164E-02		1.183E+00	4.525E+00

[Continued)

[1]The volumetric composition of 1/1 is considered to be as follows: 70.3% industrial, 21.9% bioresearch, 2.3% medical, and 5.5% nonbioresearch. The radioactivity composition of 1/1 waste is considered to be: 80.5% industrial, 13.8% bioresearch, 1.3% medical and 4.4% nonbioresearch.
[2]Composition is presented as percent of total curies in each individual category of 1/1 waste and as percent of the total in all 1/1 waste combined.
Source: DOE 1991

Table 4-2 (Concluded)

	Composition, %[2]				
		Institutional			
Radionuclide	Industrial	Bioresearch	Medical	Nonbioresearch	Total
^{147}Pm	1.015E-01				6.167E-02
^{161}Sm	6.166E-03				4.960E-03
^{163}Gd			5.288E-03		7.107E-05
^{165}Yd	8.637E-02				5.948E-02
^{176}Hf	1.234E-02				9.924E-03
^{182}Ta	7.939E-01				5.387E-01
^{192}Ir	3.347E-01		1.995E+00		2.961E-01
^{201}T1			2.585E-01		3.476E-03
^{210}Po	1.424E-01				1.146E-01
^{226}Ra			1.071E-01		1.439E-03
^{230}Th	7.489E-04				6.047E-03
^{232}Th	1.665E+00				1.341E+00
^{235}U	1.356E-02				1.091E-02
^{238}U	2.172E+00			9.484E-01	1.807E+00
^{241}Pu	1.806E-02				1.453E-02
Total	1.000E+02	1.000E+02	1.000E+02	1.000E+02	1.000E+02

inventories of DOE site mixed LLRW, by physical category, for 1990. The acronyms used in Figures 4-2 and 4-3 are explained below. These sites are also the major contributors to the inventories listed in Tables 4-8 through 4-10. Tables 4-8 through 4-10 are taken from the report "Quantities and Characteristics of the Contact-Handled Low-Level Mixed Waste Streams for the DOE Complex, " done by the Idaho National Engineering Laboratory for the Integrated Thermal Treatment Study (ITTS). Thus, the smaller contributors' acronyms are not listed but can be found in DOE's 1991 integrated database.

HANF	Hanford Reservation, Washington
PORTS	Portsmouth Gaseous Diffusion Plant, Ohio
INEL	Idaho National Engineering Laboratory, Idaho
RFP	Rocky Flats Plant, Colorado
SRS	Savannah River Site, South Carolina
Y-12	Munitions Plant, Oak Ridge, Tennessee
K-25	Gaseous Diffusion Plant, Oak Ridge, Tennessee

(2) of the commercial LLRW generated, approximately 3-10 percent is mixed LLRW. If the total accumulated commercial LLRW disposal volume through 1990 is taken to be 1,384,000 m^3, then approximately 41,000-138,400 m^3 of mixed LLRW has been generated.

b. Types. Chemical properties of mixed LLRW are described by the following five categories of waste types: listed, ignitable, reactive, corrosive, and TCLP/EP (toxicity characteristic leaching procedure/extraction procedure) toxic. From commercial facilities, institutions, and plants, the following 12 categories of mixed waste have been identified:

(1) Liquid scintillation cocktails or fluids from laboratory counting activities. (These are no longer considered mixed waste.)

(2) Organic chemicals, including residues from research and manufacturing activities, spent reagents from experiments, residues from cleaning laboratory and process equipment, and expired products.

(3) Trash with organic chemicals, including used research equipment.

(4) Lead, including residues and contaminated materials.

(5) Lead solutions from lead shielding decontamination.

Table 4-3
Historical Annual Additions and Total Volume of LLW Buried at DOE Sites[1]

	Volume of Waste Buried Annually, $10^3 m^3$										
Year	FMPC	HANF	INEL	LANL	NTS	ORNL	SRS	Y-12	All Other[2]	Total Annual Addition	Total Volume Accumulated
19753	264.7	358.8	84.6	131.6	8.3	181.5	256.7	58.4	83.9	1,428,5	1,429
1976	14.4	5.3	6.2	8.8	0.0	3.8	7.9	2.7	0.9	50.0	1,479
1977	2.8	11.3	6.6	3.6	0.5	2,4	14.9	1.5	1.1	44.7	1,523
1978	1.9	10.4	5.9	7.5	10.4	2.0	15.9	1.4	3.2	58.6	1,582
1979	1.6	17.9	5.3	4.9	15.8	2.1	16.5	1.1	1.1	66.3	1,648
1980	1.3	11.3	5.1	4.8	13.3	2.0	19.8	1.4	0.7	59.7	1,708
1981	1.5	13.5	3.1	5.5	21.1	1.4	20.3	1.2	1.6	69.2	1,777
1982	2.8	12.2	3.2	4.5	56.8	1.3	22.5	2.2	2,0	107.5	1,885
1983	3.4	18.3	5.5	3.2	12.1	1.8	26.7	3.4	1.7	76.1	1,961
1984	3.5	19.1	3.9	5.4	36.0	2.2	26.2	7.2	10.6	114.1	2,075
1985	0.7	17.5	3.1	6.7	41.7	2.2	30.7	18.7	2.1	123.4	2,198
1986	0.0	21.2	3.4	4.5	27.9	1.8	30.1	15.0	1.0	104.9	2,303
1987	0.0	20.4	3.0	3.7	81.1	0.5	34.1	16.2	1.0	160.0	2,463
1988	0.0	16.8	2.0	4.3	39.1	0.6	36.7	10.5	1.0	111.0	2,574
1989	0.0	11.9	1.3	6.4	35.0	1.3	27.2	5.7	2.1	90,9	2,665
1990	0.0	7.9	1.8	4.5	9.1	0,3	26.6	4.4	0.0	54.6	2,720
TOTAL	298.5	573.8[4]	144.0	209.9	408.4	207.2	612.8	150.9	114,1	2,720	

[1] No TRU waste included; slight difference in values shown and those actually reported result from rounding off and trucation of numbers.
[2] Includes contributions from Ames, BNL, K-25, LLNL, PAD, PORTS, SLAC, and SNLA.
[3] Values from 1975 are cumulative volumes to this date.
[4] Does not include 5,190m^3 of grouted-liquid LLW disposed of at Hanford.

Source: DOE 1991

Table 4-4
Characteristics of Important Radionuclides

Nuclide	Atomic Number	Half-life[1]	Principal mode(s) of decay[2]	Major Radiation Energies[3] MeV/dis			"Q" Value[4]		Specific Activity Ci/o	Daughter(s)
				σ	Θ	$Y^{(x)}$	(MeV/dis)	(W/Ci)		
^{3}H	1	1.233E+01 y	β		0.00568		5.68E-03	3.37E-05	9.650E+03	^{3}Ho
^{14}C	6	5.730E+03 y	β		0.0495		4.95E-02	2.93E-04	4.457	^{14}N
^{32}P	15	14.282 d	β		0.6947		6.95E-01	4.12E-03	2.853E+05	^{32}S
^{35}S	16	87.51 d	β		0.0486		4.86E-02	2.88E-04	4.263E-04	^{35}Cl
^{36}Cl	17	3.01E+05 y	β (98.1%); EC (1.9%)		0.2460		2.460E-01	1.458E-0	3.299E-02	^{36}Ar ^{36}S
^{45}Ca	20	163.8 d	β		0.0770		7.70E-02	4.56E-04	1.780E+04	^{45}So
^{46}Sc	21	83.83 d	β	0.1120	2.0095		2.122E+00	1.257E-02	3.381E+04	^{46}Tl
^{51}Cr	24	27.704 d	EC		0.0031	0.0325	3.56E-02	2.11E-04	9.240E+04	^{51}V
^{54}Mn	25	312.20 d	EC		0.0034	0.8360	8.394E-01	4.975E-03	7.738E+03	^{54}lCr
^{55}Fe	26	2.73 y	EC		0.0038	0.0016	5.4E-03	3.2E-05	2.500E+03	^{55}Mn
^{59}Fe	26	44.496 d	β		0.1174	1.1882	1.3056	7.741E-03	4.918E+04	^{59}Co
^{57}Co	27	271.77 d	EC		0.0176	0.1252	1.428E-01	8.464E-01	8.456E+03	^{57}Fa
^{58}Co	27	70.92 d	EC		0.0336	0.9758	1.0094	5.99E-03	3.181E+04	^{58}Fa
^{60}Co	27	5.271 y	β		0.0958	2.5058	2.6016	1.541E-02	1.131E+03	^{60}Ni
^{60m}Co	27	10.47 min	IT (99.75%) β (0.25%)		0.0536	0.0066	6.02E-02	3.57E-04	2.993E+08	^{60}Co; ^{60}Ni
^{59}Ni	28	7.5E+04 y	EC		0.0043	0.0024	6.72E-03	3.98E-05	7.574E+04	^{59}Co
^{63}Ni	28	1.001E+02 y	β		0.0171		1.71E-02	1.01E-04	6.168E+01	^{63}Cu
^{63}Zn	30	244.1 d	EC		0.0066	0.5838	5.90E-01	3.51E-03	8.237E+03	^{65}Cu
^{67}Ga	31	3.261 d	EC		0.0333	0.1540	1.882E-01	1.115E-03	5.975E+05	^{67}Zn
^{75}Sa	34	119.77 d	EC		0.0134	0.3924	4.06E-01	2.41E-03	1.453E+04	^{75}As
^{79}Sa	34	<6.5E+04 y			0.0529		5.29E-02	3.13E-04	6.966E-02	^{79}Br
^{85}Kr	36	1.072E+01 y	β		0.2505	0.0022	2.53E-01	1.50E-03	3.923E+02	^{85}Rb
^{86}Rb	37	18.66 d	β		0.6670	0.0945	7.62E-01	4.52E-03	8.138E+04	^{86}Sr

(Sheet 1 of 6)

[1] y - years; d - days; h - hours; min - minutes; and s - seconds.
[2] α - alpha decay; β - negative beta decay; EC - electron capture; IT - isomeric transition (radioactive transition from one nuclear isomer to another of lower energy); and SPF - spontaneous fission.
[3] α - alpha decay; θ - total electron emissions; and $Y^{(x)}$ - gamma and X-ray photons.
[4] The sum of the average energies per different radiation types in MeV/disintegration or W/Ci (includes alpha and beta particles, discrete electrons, and photons). The "Q" value indicates the amount of energy (heat) that could be deposited in a radioactive material from each decay event if none of the radiation escaped from the material.

Source: DOE 1991

Table 4-4. (Continued)

Nuclide	Atomic Number	Half-life[1]	Principal mode(s) of decay[2]	Major Radiation Energies[3] MeV/dis σ	Θ	Y(x)	"Q" Vaiue[4] (MeV/dis)	(W/Ci)	Specific Activity Ci/o	Daughter(s)
^{89}Sr	38	50.55 d	β		0.5829	0.0001	5.83E-01	3.46E-03	2.905E+04	^{89}Y
^{90}Sr	38	2.85E+01 y	β		0.1958		1.96E-01	1.16E-03	1.364E+02	^{90}Y
^{90}Y	39	2.671 d	β		0.9332		9.33E-01	5.54E-03	5.441E+05	^{90}Zr
^{91}Y	39	58.51 d	β		0.6039	0.0036	6.07E-01	3.60E-03	2.452E+04	^{91}Zr
^{93}Zr	40	1.53E+06 y	β		0.0471	0.0018	4.89E-02	2.90E-04	2.513E-03	^{93}Nb
^{95}Zr	40	64.02 d	β		0.1200	0.7337	8.54E-01	5.06E-03	2.148E+04	^{95}Nb
^{93m}Nb	41	1.36E+01 y	IT		0.0281	0.0018	2.99E-02	1.77E-04	2.826E+02	^{93}Nb
^{94}Nb	41	2.03E+04 y	β		0.1454	1.5715	1.7169	1.018E-02	1.873E-01	^{94}Mo
^{95}Nb	41	34.97 d	β		0.0435	0.7643	8.078E-01	4.788E-03	3.910E+04	^{95}Mo
^{99}Mo	42	2.748 d	β		0.4076	0.2723	6.799E-03	4.028E-03	4.796E+05	^{99}To
^{99}Tc	43	2.13E+05 y	β		0.0846		8.46E-02	5.01E-04	1.695E-02	^{99}Ru
^{99m}Tc	43	6.006 h	IT		0.0142	0.1240	1.382E-01	8.186E-04	5.271E+06	^{99}Tc
^{103}Ru	44	39.254 d	β		0.1105	0.4851	5.96E-01	3.53E-03	3.277E+04	^{103}Rh
^{106}Ru	44	1.020 y	β		0.1004		1.004E-01	5.951E-04	3.346E+06	^{106}Rh
^{103m}Rh	45	56.12 min	IT		0.0375	0.0017	3.92E-02	2.32E-04	3.253E+07	^{103}Rh
^{106}Rh	45	2.17 h	β		0.3144	2.8826	3.197	1.894E-02	3.560E+09	^{106}Pd
^{107}Pd	46	6.5E+06 y	β			0.0093	9.3E-03	5.5E-05	5.143E-04	^{107}Ag
^{110}Ag	47	24.6 s	β(99.70%) EC (0.30%)		1.842	0.0316-	1.216	7.208E-03	4.169E+09	^{110}Cd; ^{110}Pd
^{110m}Ag	47	249.76 d	β(96.64 %) IT(1.36%)		0.0755	2.7392	2.815	1.669E-02	4.750E+03	^{110}Cd; ^{110}Ag
^{113m}Cd	48	1.37E+01 y	β(99.9%) IT(0.1%)			0.1834	1.83E-01	1.08E-03	2.168E+02	^{113}In; ^{113}Cd
^{115m}Cd	48	44.6 d	β		0.6029	0,0329	6.36E-01	3.76E-03	2.546E+04	^{115}In
^{111}In	49	2.807 d	EC		0.0340	0.4053	4.393E-01	2.604E-03	4.157E+05	^{111}Cd
^{113m}In	49	1.658 h	IT		0.1340	0.2555	3.89E-01	2.31E-03	1.673E+07	^{113}In
^{114m}In	49	49.51 d	IT(95.7%) EC(4.3%)		0.1431	0.0943	2.37E-01	1.40E-03	2.313E+04	^{114}In; ^{114}Cd
^{113}Sn	50	115.09 d	EC		0.1394	0.2808	4.20E-01	2.48E-03	1.004E+04	^{113}In
^{117m}Sn	50	13.61 d	IT		0.1613	0.1580	3.19E-01	1.89E-03	7.969E+04	^{117}Sn
^{119m}Sn	50	293.0 d	IT		0.0783	0.0114	8.97E-01	5.32E-04	4.478E+03	^{119}Sn
^{121m}Sn	50	5.5E+01 y	IT(77.6%) /3(22.4%)		0.0352	0.0050	4.02E-02	2.43E-04	5.912E+01	^{121}Sn ^{121}Sb

(Sheet 2 of 6)

Table 4-4. (Continued]

Nuclide	Atomic Number	Half-life[1]	Principal mode(s) of decay[2]	Major Radiation Energies[3] MeV/dis σ	Θ	Y(x)	"Q" Value[4] (MeV/dis)	(W/Ci)	Specific Activity Ci/o	Daughter(s)
^{123m}Sn	50	129.2 d	β		0.5222	0.0069	5.29E-01	3.14E-03	8.219E+03	^{123}Sb
^{125}Sn	50	9.64 d	β		0.8110	0.3124	1.123	6.656E-03	1.084E+05	^{125}Sb
^{126}Sn	50	~1E+05 y	β		0.1249	0.0573	1.82E-01	1.08E-03	2.837E-02	^{126}Sb
^{124}Sb	51	60.20 d	β		0.3897	1.8523	2.242	1.329E-02	1.749E+04	^{124}To
^{126}Sb	51	2.73 y	β		0.1257	0.4434	5.69E-01	3.37E-03	1.032E+03	^{126}To
^{128}Sb	51	12.4 d	β		0.3527	2.7496	3.102	1.839E-02	8.360E+04	^{128}To
^{128m}Sb	51	19.0 min	β(86%) IT(14%)							
^{123m}To	52	119.7 d	IT		0.1020	0.1482	2.502E-01	1.482E-03	8.870E+03	^{123}To
^{125m}To	52	58 d	IT		0.1106	0.0361	1.467E-01	8.690E-04	1.801E+04	^{125}To
^{127}To	52	9.35 h	β		0.2248	0.0048	2.30E-01	1.36E-03	2.639E+06	^{127}I
^{127m}To	52	109 d	IT(97.6%) β(2.4%)		0.0821	0.0111	9.32E-02	5.52E-04	9.432E+03	^{127}To ^{127}I
^{129}To	52	1.160 h	β		0.5422	0.0624	6.05E-01	3.58E-03	2.094E+07	^{129}I
^{129m}To	52	33.6 d	IT(64%) β(36%)		0.2663	0.0370	3.03E-01	1.80E-03	3.013E+04	^{129}To
^{123}I	53	13.2 h	EC		0.0276	0.1729	2.005E-01	1.188E-03	1.940E+06	^{123}To
^{125}I	53	60.14 d	EC		0.0179	0.0423	6.02E-02	3.57E-04	1.737E+04	^{125}To
^{129}I	53	1.57E+07 y	β		0.0556	0.0248	8.04E-02	4.77E-04	1.765E-04	^{129}Xo
^{131}I	53	8.040 d	β		0.1913	0.3826	5.74E-01	3.40E-03	1.240E+05	^{130}Xo
^{133}Xo	54	5.245 d	β		0.1363	0.0459	1.82E-01	1.08E-03	1.872E+05	^{133}Cs
^{134}Cs	55	2.062 y	β		0.1639	1.5555	1.719	1.019E-02	1.294E+03	^{134}Ba
^{136}Cs	55	3.0E+06 y	β		0.0563		5.63E-02	3.32E-04	1.151E-03	^{135}Ba
^{137}Cs	55	3.00E+01 y	β(94.6%) β(5.4%)			0.1708	1.71E-01	1.01E-03	8.698E+01	^{137m}Ba ^{137}Ba
^{133}Ba	56	1.054E+01 y	EC		0.0547	0.4045	4.592E-01	2.722E-03	2.500E+02	^{133}Ca
^{137m}Ba	56	2.552 min	IT			0.6616	6.64E-02	3.94E-03	5.379E+08	^{137}Ba
^{141}Ca	58	32.50 d	β		0.1707	0.0070	2.48E-01	1.47E-03	2.848E+04	^{141}Pr
^{144}Ca	58	284.9 d	β		0.0918	0.0192	1.11E-01	6.58E-03	3.190E+03	^{144}Pr
^{143}Pr	59	13.58 d	β		0.3156		3.16E-01	1.87E-03	6.731E+04	^{143}Nd
^{144}Pr	59	17.28 min	β		1.2091	0.0289	1.238	7.338E-03	7.555E+07	^{144}Nd
^{144m}Pr	59	7.2 min	IT(99.96%) β(0.04%)		0.0464	0.0121	5.58E-02	3.43E-04	1.814E+08	^{144}Pr ^{144}Nd

(Sheet 3 of 6)

Table 4-4. (Continued)

Nuclide	Atomic Number	Half-life[1]	Principal mode(s) of decay[2]	Major Radiation Energies[3] MeV/dis			"Q" Value[4]		Specific Activity Ci/o	Daughter(s)
				σ	Θ	$Y^{(x)}$	(MeV/dis)	(W/Ci)		
^{146}Pm	61	5.53 y	EC(66.1%) β(33.9%)		0.0928	0,7542	8.47E-01	5.02E-03	4.428E+02	^{146}Nd; ^{146}Sm
^{147}Pm	61	2.6234 y	β		0.6196		6.20E-02	3.67E-04	9.27E+02	^{147}Sm
^{148}Pm	61	5.370 d	β		0.7235	0.5747	1.298	7.691E-03	1.643E+05	^{148}Sm
^{148m}Pm	61	41.29 d	β(95.4%) IT(4.6%)		0.1695	1.9861	2.156	1.27E-02	2.136E+04	^{148}Sm ^{148}Pm
^{151}Sm	62	9.0E-01 y	β		0.1251		1.25E-01	7.41E-04	2.631E+01	^{151}Eu
^{152}Eu	63	1.333E+01 y	EC(72.08%) β(27.92%)		0.1275	1.1628	1.290	7.646E-03	1.729E+02	^{152}Sm ^{152}Gd
^{154}Eu	63	8.8 y	β		0.2794	1.2531	1.532	9.081E-03	2.699E+02	^{154}Gd
^{155}Eu	63	4.96 y	β		0.0650	0.0633	1.28E-01	7.59E-04	4.651E+02	^{155}Gd
^{153}Gd	64	241.6 d	EC		0.0390	0.1015	1.414E-01	8.381E-04	3.526E+03	^{153}Eu
^{160}Tb	65	72.3 d	β		0.2535	1.1271	1.381	8.186E-03	1.129E+04	^{160}Dy
^{169}Yb	70	32.02 d	EC		0.1117	0,3121	4.238E-01	2.512E-03	2.414E+04	^{169}Tm
^{175}Hf	72	70.0 d	EC		0.0439	0.3646	4.085E-01	2.422E-03	1.066E+04	^{176}Lu
^{182}Ta	73	115.0 d	β		0.2073	1.3011	1.508	8.940E-03	6.253E+03	^{182}W
^{192}Ir	77	73.831 d	β(95.4%) EC(4.6%)		0.2162	0.8137	1.030	6.105E-03	9.211E+03	^{192}Pt; ^{192}Os
^{201}Tl	81	3.046 d	EC		0.0481	0.0924	1.40E-01	8.30E-04	2.132E+05	^{201}Hg
^{207}Tl	81	4.77 min	β		0.4931	0.0022	4.95E-01	2.93E-03	1.904E+08	^{207}Pb
^{208}Tl	81	3.053 min	β		0.5979	3.3742	3.972	2.354E-02	2.945E+08	^{208}Pb
^{209}Pb	82	3.253 h	β		0.1980		1.98E-01	1.17E-03	4.544E+05	^{209}Bi
^{211}Pb	82	36.1 min	β		0.4523	0.0678	5.20E-01	3.083E-03	2.466E+07	^{211}Bi
^{212}Pb	82	10.64 h	β		0.1752	0.1453	3.20E-01	1.90E-03	1.389E+08	^{212}Bi
^{211}Bi	83	2.14 min	α(99.727%) β(0.273%)	6.5505	0.0090	0.0467	6.607	3.916E-02	4.184E+08	^{207}Tl; ^{211}Po;
^{212}Bi	83	1.0092 h	α(35.94%) α(64.06%)	2.1740	0.5025	0.1061	2.783	1.649D-02	1.465E+07	^{208}Tl; ^{212}Po
^{213}Bi	83	45.59 min	α(2.16%) β(97.84%)	0.1268	0.4563	0.0825	66.6E-01	3.95E-03	1.934E+07	^{209}Tl; ^{213}Po
^{212}Po	84	2.98E-07 s	α	8.7844			8.784	5.207E-02	1.774E+17	^{208}Pb
^{213}Po	84	4.2E-06 s	α	8.3757			8.375	4.964E-02	1.261E+16	^{209}Pb
^{215}Po	84	1.780E-03 s	α	7.3864			7.386	4.378E-02	2.948E+13	^{211}Pb
^{216}Po	84	1.50E-02 s	α	6.7785			6.779	4.018E-02	3.482E+11	^{212}Pb

(Sheet 4 of 6)

Table 4-4. (Continued)

Nuclide	Atomic Number	Half-life[1]	Principal mode(s) of decay[2]	Major Radiation Energies[3] MeV/dis			"Q" Value[4]		Specific Activity Ci/o	Daughter(s)
				σ	Θ	$Y^{(x)}$	(MeV/dis)	(W/Ci)		
^{217}At	85	3.23E-02 s	α	7.0657		0.0002	7.066	4.189E-02	1.610E+12	^{213}B;
^{219}Rn	86	3.96 s	α	6.8122	0.0064	0.0560	6.875	4.076E-02	1.301E+10	^{215}Po
^{220}Rn	86	55.6 s	α	6.2878		0.0005	6.288	3.727E-02	9.223E+08	^{216}Po
^{222}Rn	86	3.825 d	α	5.4892		0.0004	5.480	3.255E-02	1.538E+05	^{218}Po
^{221}Fr	87	4.9 min	α	6.3571	0.0084	0.0277	6.393	3.789E-02	1.772E+08	^{217}At
^{223}Fr	87	21.8 min	β		0.3805	0.0542	4.35E-01	2.85E-03	3.868E+07	^{223}Ra
^{223}Ra	88	11.43 d	α	5.6972	0,0731	0.1348	5.905	3.500E-02	5.121E+04	^{219}Rn
^{224}Ra	88	3.66 d	α	5.6751	0.0022	0.0103	5.688	3.372E-02	1.593E+05	^{220}Rn
^{225}Ra	88	14.2 d	β		0.1057	0.0137	1.19E-01	7.08E-04	3.920E+04	^{225}Ac
^{226}Ra	88	1.600E+03 y	α	4.7741	0.0035	0.0067	4.784	2.836E-02	9.887E-01	^{222}Rn
^{228}Ra	88	5.75 y	β		0,0116		1.16E-02	6.88E-05	2.340E+02	^{228}Ac
^{225}Ac	89	10.0 d	α	5.7501	0.0257	0.0176	5.793	3.434E-02	5.803E+04	^{221}Fr
^{227}Ac	89	2.177E+01 y	β(98.62%) α(1.38%)	0.0673	0.0123	0.0002	8.00E-02	4.74E-04	7.233E+01	^{227}Th; ^{223}Fr
^{228}Ac	89	6.13 h	β		0,4292	0.9269	1.356	8.038E-03	2.242E+06	^{228}Th
^{227}Th	90	18.718 d	α	5.9022	0.0543	0.113	6.068	3.597E-02	3.073E+04	^{223}Ra
^{228}Th	90	1.913 y	α	5.3992	0.0201	0.0034	5.423	3.214E-02	8.196E+02	^{224}Ra
^{229}Th	90	7.340E+03 y	α	4.8620		0.0343	4.896	2.902E-02	2.127E-01	^{225}Ra
^{230}Th	90	7.54E+04 y	α	4.6651		0.0004	4.665	2.765E-02	2.109E-02	^{226}Ra
^{231}Th	90	1.0633 d	β	0.1732		0.0295	2.03E-01	1.21E-03	5.316E+05	^{231}Pa
^{232}Th	90	1.405E+10 y	α	4.0056		0.0002	4.006	2.375E-02	1.097E-07	^{226}Ra
^{234}Th	90	24.10 d	β		0.0158	0.0094	2.52E-02	1.49E-04	2.136E+04	^{234}Pa
^{231}Pa	91	3.276E+04 y	α	4.9230	0.0483	0.0399	5.011	2.970E-02	4.723E-02	^{227}Ac
^{233}Pa	91	27.0 d	β		0.1941	0.2042	3.98E-01	2.36E-03	2.075E+04	^{233}U
^{234m}Pa	91	1.17 min	β(99.87%) IT(0.13%)		0.8227	0.0121	8.35E-01	4.95E-03	6.868E+08	^{234}U ^{234}Pa
^{232}U	92	6.89E+01 y	α	5.3065		0.0002	5.307	3.146E-02	2.140E+01	^{226}Th
^{233}U	92	1.592E+05 y	α	4.8141	0.0055	0.0013	4.821	2.857E-02	9.680E-03	^{229}Th
^{234}U	92	2.454E+05 y	α	4.7732		0.0001	4.773	2.829E-02	6.248E-03	^{230}Th
^{235}U	92	7.037E+08 y	α	4.3785	0.0426	0.1561	4.577	2.713E-02	2.161E-06	^{231}Th
^{236}U	92	2.342E+07 y	α	4.4793	0.0108	0.0015	4.492	2.662E-02	6.469E-05	^{232}Th
^{238}U	92	4.468E+09 y	α	4.1945	0.0095	0.0013	4.205	2.492E-02	3.362E-07	^{234}Th

(Sheet 5 of 6)

Table 4-4. (Concluded)

Nuclide	Atomic Number	Half-life[1]	Principal mode(s) of decay[2]	Major Radiation Energies[3] MeV/dis			"Q" Value[4]		Specific Activity Ci/o	Daughter(s)
				σ	Θ	$Y^{(x)}$	(MeV/dis)	(W/Ci)		
^{236}Np	93	1.550E+05 y	β(8.9%) α(0.20%)		0.1967	0.1411	3.38E-01	2.00E-03	1.317E-02	^{236}U; ^{236}Pu; ^{232}Pa
^{237}Np	93	2.140E+06 y	α	4.7604	0.0640	0.0327	4.857	2.879E-02	7.049E-04	^{233}Pa
^{239}Np	93	2.355 d	β		0.2521	0.1740	4.26E-01	2.53E-03	2.320E+05	^{239}Pu
^{236}Pu	94	2.851 y	α	5.7521	0.0126	0.0020	5.767	3.418E-02	5.313E+02	^{232}U
^{238}Pu	94	8.774E+01 y	α	5.4871	0.0099	0.0018	5.499	3.2593E-02	1.712E+01	^{234}U
^{239}Pu	94	2.411E+04 y	α	5.1011		0.0001	5.101	3.024E-02	6.216E-02	^{235}U
^{240}Pu	94	6.563E+03 y	α	5,1549			5.155	3.056E-02	2.279E-01	^{236}U
^{241}Pu	94	1.44E+01 y	β	0.0001		0.0052	5.3E-03	3.2E-05	1.030E+02	^{241}Am
^{242}Pu	94	3.763E+05 y	α	4.8901	0.0081	0.0014	4.900	2.904E-02	3.818E-03	^{238}U
^{244}Pu	94	8.26E+07 y	α(99.875%) SPF(0.125%)	4.5751	0.0007	0.0001	4.576	2.712E-02	1.774E-05	^{240}U; (fission product)
^{241}Am	95	4.327E+02 y	α	5.4801	0.0304	0.0287	5.539	3.283E-02	3.432	^{237}Np
^{242}Am	95	16.01 h	β(82.7%) EC(17.3%)		0.1781	0.0180	1.96E-01	1.16E-03	8.084E+05	^{242}Cm; ^{242}Pu
^{242m}Am	95	1.41E+02 y	IT(99.55%) α(0.45%)	0.0232	0.0403	0.0049	6.84E-02	4.05E-04	9.718	^{242}Am ^{238}Np
^{243}Am	95	7.380E+03 y	α	5.2658		0.0481	5.3137	3.1496E-02	1.993E-01	^{239}Np
^{242}Cm	96	162.94 d	α	6.0434	0.0090	0.0018	6.0542	3.5886E-02	3.306E+03	^{238}Pu
^{243}Cm	96	2.85E+01 y	α(99.76%) EC(0.24%)	5.8380	0.1129	0.1316	6.083	3.605E-02	6.162E+01	^{239}Pu ^{243}Am
^{244}Cm	96	1.811E+01 y	α	5.7965		0.0016	5.798	3.437E-02	8.090E+01	^{240}Pu
^{245}Cm	96	8.5E+03 y	α	5.3631	0.1342	0.1178	5.615	3.329E-02	1.717E-01	^{241}Pu
^{246}Cm	96	4.73E+03 y	α	5.3764	0.0072	0.0014	5.385	3.192E-02	3.072E-01	^{242}Pu
^{247}Cm	96	1.56E+07 y	α	4.9475		0.3152	5.263	3.119E-02	9.278E-05	^{243}Pu
^{248}Cm	96	3.40E+05 y	α(91.74%) SPF(8.26%)	4.6524			4.6524	2.7577E-02	4.251E-03	^{244}Pu (fission product)
^{252}Cf	98	2.645 y	α(96.908%) SPF(3.092%)	5.9308	0.0051	0.0011	5.9370	3.5191E-02	5.378E+02	^{248}Cm (fission product)

(Sheet 6 of 6)

Table 4-5
Representative DOE LLW Radionuclide Composition by Percent Activity

Uranium/thorium		Fission Product		Induced Activity		Alpha <100 nCi/g		"Other"	
Nuclide	Composition	Nuclide	Composition	Nuclide	Composition	Nuclide	Composition	Nuclide	Composition
^{208}T	0.0017	^{80}Co	**0.08**	^{51}Cr	4.95	^{238}Pu	2.62	^{3}H	**1.22**
^{212}Pb	0.0045	^{90}Sr	**7.77**	^{54}Mn	38.10	^{239}Pu	0.20	^{14}C	**0.06**
$^{212}B1$	0.0045	^{90}Y	**7.77**	^{58}Co	55.40	^{240}Pu	0.70	^{54}Mn	**6.76**
^{212}Po	0.0029	^{95}Zr	**1.27**	^{59}Fe	0.49	^{241}Pu	96.4	^{58}Co	**6.24**
^{216}Po	0.0045	^{95}Nb	**2.83**	^{60}Co	0.87	^{241}Am	0.004	^{60}Co	**18.03**
^{224}Ra	0.0045	^{99}Tc	**0.02**	^{65}Zn	0.19	^{242}Cm	0.056	^{90}Sr	**8.48**
^{228}Ra	0.0269	^{125}Sb	**2.93**		100.00	^{244}Cm	0.20	^{90}Y	**8.48**
^{228}Ac	0.0269	^{125m}T	**0.73**				100.000	^{99}Tc	**0.12**
^{228}Tc	0.0045	^{106}Ru	**6.39**					^{134}Cs	**13.98**
^{231}Th	0.0259	^{106}Rh	**6.39**					^{137}Cs	**18.45**
^{232}Th	0.273	^{134}Cs	**0.38**					^{137m}Ba	**17.45**
^{234}Th	33.197	^{137}Cs	**17.31**					^{236}U	**0.73**
^{234m}Pa	33.197	^{137m}Ba	**16.38**						
^{234}Pa	0.0034	^{144}Ca	**14.67**						*100.00*
^{235}U	0.0258	^{144}Pr	**14.67**						
^{236}U	33.197	^{147}Pm	**0.06**						
	100.0000	^{161}Sm	**0.11**						
		^{162}Eu	**0.09**						
		^{164}Eu	**0.09**						
		^{166}Eu	**0.06**						
			100.00						

Source: DOE 1991

Summary of Radiouclide Characteristics for LLW at DOE Sites[1]

Waste type	Radionuclide Characteristic [2]	Volume, m' 1990	Volume, m' Cumulative	Volume, m' 1991 (projected)	Activity, Ci 1990	Activity, Ci Total gross[4]	Activity, Ci 1991 (projected)
Generated onsite	Uranium/thorium	30,841	NA[3]	31,476	824,018	NA	1,066,623
	Fission product	21,411	NA	20,314	135,483	NA	103,764
	Induced activity	4,314	NA	4,710	225,915	NA	1,645,882
	Tritium	1,307	NA	1,191	38,475	NA	26,670
	Alpha	9,347	NA	11,428	33	NA	34
	Other	979	NA	1,465	5,069	NA	25,859
	Total	68,199	NA	70,584	1,228,993	NA	2,868,832
Stored	Uranium/thorium	5,996	42,395	4,943	11	28	18
	Fission product	366	1,284	404	133,611	2,416,148	101,760
	Induced activity	219	1,175	268	6,843	3,647,808	4,650
	Tritium	710	2,043	605	54,986	629,465	50,010
	Alpha	3,820	2,466	5,250	20	113	21
	Other	1,554	6,175	339	2,417	2,421	2,429
	Total	12,685	55,538	11,809	195,888	6,695,983	158,886
Buried	Uranium/thorium	21,347	841,559	25,268	35	861,304	70
	Fission product	18,459	1,157,195	17,447	1,634	7,572,193	1,790
	Induced activity	2,244	182,786	2,033	3,762	6,788,485	3,990
	Tritium	1,749	77,791	1,309	83,432	15,059,719	72,250
	Alpha	8,275	309,900	5,976	482	65,559	13
	Other	2,462	150,438	2,473	207,634	11,877,579	519,030
	Total	54,536	2,719,669	54,506	296,979	42,224,839	602,684

[1] Based on DOE site information provided by the Waste Management Information System,

[2] Radionuclide characteristics: (1) uranium/thorium- those waste materials in which the principal hazard results from naturally occurring uranium and thorium isotopes. The hazard from all other radioactive contaminants should be insignificant. Examples of these wastes include depleted uranium, natural uranium ore, and slightly enriched uranium; (2) fission product-waste materials that are contaminated with beta gamma emitting radionuclides which originate as a result of fission processes. Primary examples are ^{137}Cs and ^{90}Sr; (3) induced activity - waste materials that are contaminated with beta-gamma-emitting radioisotopes which are generated through neutron activation. Of major concern is ^{60}Co; (4) tritium - waste materials in which the principal hazard results from tritium (^{3}H); (5) alpha - waste materials contaminated with alpha-emitting radionuclides not listed under U/Th or low levels (<100 nCi/g) of TRU isotopes; and (6) other - unknown or not defined.

[3] From the beginning of operations through 1990.

[4] Sum of annual additions without decay,

[5] Not applicable.

[6] Information not available.

Source: DOE 1991

Table 4-7
Summary of Physical Characteristics for LLW at DOE Sites[1]

Waste Type	Physical Characteristic [2]	Volume, m^3 1990	Cumulative	1991 (projected)	Activity, Ci 1990	Total gross[4]	1991 (projected)
Generated onsite	Biological	56	NA[3]	45	< < 1	NA	1
	Contaminated equipment	18,350	NA	19,427	7,214	NA	1,188,547
	Decontamination debris	3,325	NA	5,376	890,206	NA	1,247,718
	Dry solids	30,737	NA	31,663	327,965	NA	407,939
	Solidified sludge	14,377	NA	1,871	45	NA	39
	Other	1,354	NA	12,202	3,563	NA	24,588
	Total	68,199	NA	70,584	1,228,993	NA	2,868,832
Stored	Biological	3	INA'	1	< < 1	INA	< < 1
	Contaminated equipment	1,223	INA	1,218	7,082	INA	8,574
	Decontamination debris	2,433	INA	4,381	8	INA	10
	Dry solids	3,308	INA	2,724	188,683	INA	150,175
	Solidified sludge	3,338	INA	1,818	7	INA	7
	Other	2,380	INA	1,667	108	INA	120
	Total	12,685	INA	11,809	195,888	INA	158,886
Buried	Biological	104	INA	92	< < 1	INA	1
	Contaminated equipment	15,730	INA	13,029	9,879	INA	9,299
	Decontamination debris	3,827	INA	11,110	1,467	INA	1,137
	Dry solids	29,355	INA	26,488	77,060	INA	72,250
	Solidified sludge	41	INA	46	131	INA	10
	Other	5,479	I NA	3,741	208,442	INA	591,987
	Total	54,536	INA	54,506	296,979	INA	602,684

[1] Based on DOE site information provided by the Waste Management Information System.
[2] Physical characteristics: (a) biological (sewage sludge, animal carcasses, excrete, etc.); (b) contaminated equipment (components, maintenance wastes, etc.); (c) decontamination debris (wastes resulting from decontaminatiom and decommissioning efforts, construction debris, etc.); (d) dry solids (normal plant wastes, blotting paper, combustible materials, etc.); (e) solidified sludge (any wastes solidified from a process sludge such as evaporator bottoms solidification, solidification of precipitated salts, etc.); and (f) other (materials which are outside of the above categories).
[3] From the beginning of operations through 1990.
[4] Sum of annual additions without decay.
[5] Not applicable.
[6] Information not available.

Source: DOE 1991

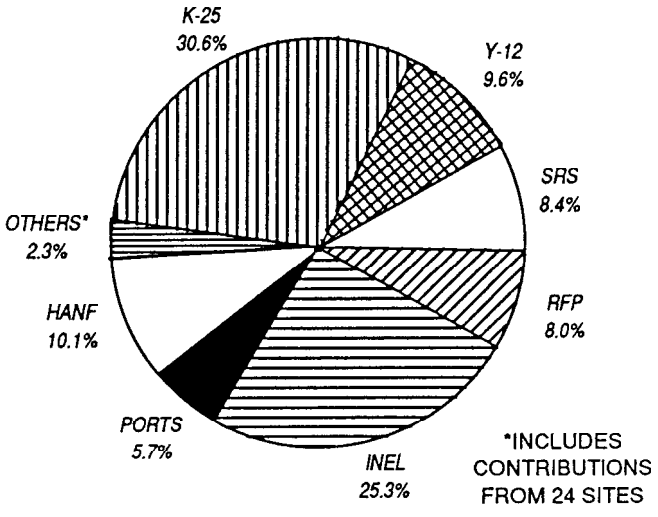

SITE	CUBIC METERS
HANF	1.08E+04
INEL	2.70E+04
K-25	3.27E+04
PORTS	6.09E+03
RFP	8.49E+03
SRS	8.96E+03
Y-12	1.03E+04
OTHERS*	2.48E+03
TOTAL	**1.07E+05**

Figure 4-2. Total volume (m^3) inventory of DOE mixed LLRW through 1990

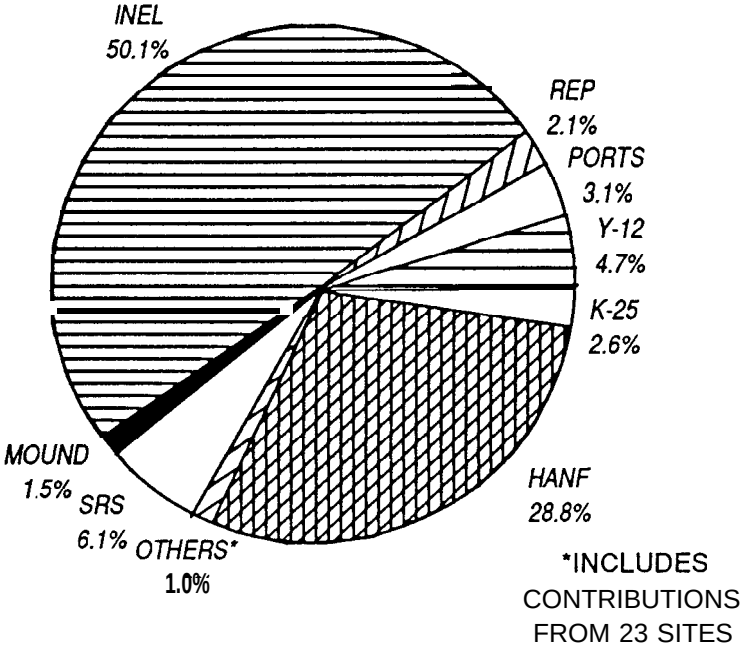

SITE	CUBIC METERS
HANF	6.38E+03
INEL	1.11E+04
K-25	5.87E+02
MOUND	3.24E+02
PORTS	6.89E+02
RFP	4.82E+02
SRS	1.35E+03
Y-12	1.05E+03
OTHERS*	2.15E+02
TOTAL	2.22E+04

Figure 4-3. Volume generation (m^3) of DOE mixed LLRW during 1990 (DOE 1991)

Table 4-8
Radionuclides Included in the ITTS Study Database

Alpha	Fission Products	Induced Activity	Tritium
Am-241	BA-1 37	Co-56	H-3
Pu-239	Ce-144	Co-60	
Pu-241	Cs-134	Cr-51	Uranium/ Thorium
	Cs-137	Fe-59	Pa-234
	Nb-95	Mn-54	Th-234
	Pr-144	Te-99	U-235
	Rh-106	Zn-65	U-238
	Ru-106		
	Sb-125		
	Sr-90		
	Te-125m		
	Y-90		
	Zr-95		
Other	This category is made up of a combination of any of the above radionuclides.		

(6) Waste oil from contaminated equipment, systems, and work areas.

(7) Trash with oil from radioactive systems and work areas.

(8) Chlorinated fluorocarbon (CFC) solvents.

(9) CFC concentrates from laundry and tool decontamination.

(10) Aqueous corrosive liquids from cleaning spent fuel casks and resin filters.

(11) Chromate wastes from resin changeouts in Light Water Reactors (LWRS).

(12) Cadmium wastes from spent LWR equipment and cleanup activities, including spent welding rods, weld cleaning, and equipment decontamination.

4-4. Observed Radionuclide Components in MW

The U.S. Army Corps of Engineers has observed typical radionuclide contents in disposal items, as shown in Table 4-12.

Table 4-9
Quantities of Contacted-Handled Low-Level Mixed Wastes Derived for the ITTS Study[1]

Facility	State	Net Weight (Kg)	Drums (Kg)	Bins (Kg)	Total Weight (Kg)
Total LLMW:		141,560,474	10,055,196	4,677,120	156,292,790
Argonne National Laboratory-East	Illinois	142,892	12,848	580	156,320
Brookhaven National Laboratory	New York	64,637	11,642	290	76,769
Energy Technology Engineering Center	California	1,173,844	85,466	1,160	1,260,470
Fernald Environmental Management Project	Ohio	2,987,064	415,010	2,030	3,404,104
Hartford Site	Washington	4,494,859	697,515	24,070	5,216,444
Idaho National Engineering Laboratory	Idaho	13,567,705	835,385	1,305,290	15,708,380
Lawrence Livermore National Laboratory	California	166,778	24,461	3,190	194,429
Los Alamos National Laboratory	New Mexico	1,063,295	67,532	18,850	1,149,677
Middlesex Sampling Plant	New Jersey	41,805,426	0	2,238,510	44,043,936
Oak Ridge National Laboratory	Tennessee	267,789	37,015	6,670	311,474
Oak Ridge National Laboratory, K-25 Site	Tennessee	35,645,796	4,263,323	15,660	39,924,779
Oak Ridge National Laboratory, Y-1 2 Plant	Tennessee	17,496,920	1,192,562	432,100	19,121,602
Paducah Gaseous Diffusion Plant	Kentucky	203,037	28,518	3,480	235,035
Pantex Plant	Texas	67,393	6,321	4,060	77,774
Portsmouth Gaseous Diffusion Plant	Ohio	5,477,490	577,975	271,730	6,327,195
Puget Sound Naval Shipyard	Washington	58,360	5,939	2,030	66,329
Rocky Flats Plant	Colorado	13,970,130	1,412,464	56,260	15,438,854
Savannah River Site	South Carolina	2,651,122	364,472	290,000	3,505,594
Weldon Spring Site	Missouri	53,936	10,613	0	64,549

[1]Quantities obtained from the DOE/NBM-l 100 (MWIR Report) (DOE 1993). The Hanford tank waste (40,086 Kg) and the RFP

Table 4-10
DOE Complex Contacted-Handled Low-Level Mixed Wastes per Waste Category - Derived for the ITTS Study[1]

Waste Categories[2]	Net Weight (Kg)	Drums (Kg)	Boxes (Kg)	Total Weight (Kg)	Density (Kg/m^3)
Total CH LLMW:	**141,560,474**	**10,055,195**	**4,677,120**	**156,292,790**	
Aqueous Liquids	2,202,248	306,701	0	2,508,949	1,013
Batteries	13,682	1,646	0	15,329	1,397
Beryllium Dust	300	235	0	535	200
Cemented Solids	274,651	10,349	8,410	293,409	1,570
Compressed Gases	2,642	323	870	3,835	548
Contaminated Metals	39,581	0	4,060	43,642	960
Elemental Lead	731,148	20,462	31,030	782,640	3,252
Heterogeneous Debris	2,226,795	77,587	355,540	2,659,923	635
Inorganic Debris	43,928,872	146,412	2,394,240	46,469,524	1,240
Inorganic Sludge/Particulates	52,580,798	6,203,626	16,530	58,800,954	1,109
Lab Packs with Metals	547,877	89,758	0	637,636	1,001
Lab Packs without Metals	656,299	108,045	0	764,343	849
Liquid Mercury	363,947	6,262	0	370,209	7,722
Multiple	17,663,553	1,366,976	980,490	20,011,019	946
Organic Debris	1,086,298	116,983	398,460	1,601,741	567
Organic Liquids	2,939,802	504,827	0	3,444,629	902
Organic Sludge/Particulate	2,763,797	366,912	20,590	3,151,299	917
Other	612,037	87,965	9,860	709,861	802
Reactive Metals	25,154	1,617	4,350	31,121	656
Soils	12,791,755	626,720	452,690	13,871,165	1,359
Soils with < 50% Debris	109,239	11,789	0	121,028	1,332

[1] Quantities obtained from the DOE/NBM-1100 (MWIR Report) (DOE 1993). The Hanford tank waste (40,086 Kg) and the RFP aqueous solar pond waste (45,425 Kg) were excluded.
[2] Waste categories were obtained from the DOE/NBM-1100 (MWIR Report) (DOE 1993).

Table 4-11
Volume Generation Rates (m^3) of DOE Site Mixed LLW, by Physical Category, for 1990[1,2]

Site	Solid	Liquid	Gas[3]	Sludge	Total
Ames	0	0	0	0	0
ANL-E[4]					
ANL-W	0.31	0	0	0.31	0.31
BNL[4]					
FMPC[4]					
FNAL	0	0.01	0	0.01	0.01
HANF	6,372.00	4.50	0	0	6,376.50
INEL	25.93	11,076.50[sic]	0	115.30	587.50
ITRI[4]					
KCP	0.31	0	0	0	0.31
K-2	259.80	211.40	0	116.30	587.50
LANL	46.05	13.73	0	70.56	130.34
LBL[4]					
LLNL[4]					
MOUND	322.10	1.48	0	0	323.58
NR sites[5]	1.01	0	0	0	1.01
NTS[4]					
ORNL[5]	0.79	6.78	0	0	7.57
PAD[4]					
PANT	8.32	2.49	0	0	10.81
Pinellas	0	0	0	0	0
PORTS	532.40	104.00	0	52.50	688.90
PPPL	0	0.02	0	0	0.02
RAP sites[5]	62.92	1.79	0	0	64.71
RFP	418.25	0	0	44.00	462.26
RMI[4]					
SLAC	0	0	0	0	0
SNLA[4]					
SNLL	0.05	0.32	0	0	0.37
SRS	144.90	1,204.90	0	0	1,349.80
WVDP	0	0.01	0	0	0.01
Y-1	164.90	30.00	0	858.00	1,052.90
Total	8,360.05	12,657.93	0	1,144.82	22,152.80

[1] Materials may be in interim storage awaiting treatment.
[2] Densities of 1,000 kg/m^3 for liquids, 500 kg/m^3 for gases, and 1,500 kg/m^3 for solids and sludges were assumed to calculate volumes when the site did not report volume data.
[3] Stored in cylinders.
[4] Updated information for 1990 was not available from this site.
[5] Includes contributions from Bettis (BAPL) and NRF (INEL).
[6] Includes a small contribution from Oak Ridge Associated Universities (ORAU).
[7] Includes contributions from Battelle (BCLDP), Colonie (CISS), Grand Junction (GJPJO), Santa Susana (SSFL), and Weldon Spring (WSSRAP).

Source: DOE 1991

Table 4-12
Radionuclides Observed in Typical Disposal Items[1]

Description	Nuclide	Activity in μCi
Instruments and Articles (Activities listed are per item. Items may be packaged in large quantities.)	U-238	2.27e+01
	TL-204	1.60e+03
	TH-232	8.70e+01
	TH-232	2.30e-08
	TH-230	1.20e+00
	TH-230	1.00e-02
	SR-90[2]	1.80e+05
	SR-90	5.00e-01
	RA-226	1.00e+03
	RA-226	1.00e-03
	PU-239	5.02e+01
	PU-239	1.00e-02
	PM-147[2]	3.00e+03
	PM-147	1.00e+01
	PB-210	2.00e-02
	PA-234	1.00e+00
	NI-63[2]	1.20e+04
	NI-63	5.00e+00
	KR-85	5.00e+04
	KR-B5	9.00e-04
	1-131	1.00e+00
	H-3	3.70e+07
	H-3	9.00e-02
	DEPLETED URANIUM	1.80e+07
	DEPLETED URANIUM	3.60e+01
	CS-137	1.00e+00
	CS-137	1.00e+00
	CO-60[2]	1.08e+09
	CO-60	9.00e-02
	C-14	1.00e+00
	BI-210	1.00e+00
	9A-133	1.00e+00
	AM-241/BE2 (neutron source)	4.00e+06
	AM-241[2]	5.00e+04
Contaminants		
Soils, building materials, debris	RA-226	2 nCi/gm max
Radium needles	RA-226	1.00e+10
Liquid scintillation vials (toluene and xylene)	H-3/C-14/S-35/CL-36/P-32/1-125	<5.00e-02
Medical and research wastes, animal carcasses	MIXED FISSION PRODUCTS H-3/C-14/S-35/CL-36/P-32/1-1 25/C0-60/ CS-1371SR-90	UNKNOWN
Soil	CS-1371SR-85 SUDAN MIX	2.00e+04
Rocket skin, frame, motor parts	TH-232	4% by wt 500 lb
Soils and drums	CO-60	up to 100 mR/hr in 8-oz. soil sample, unknown total

(Continued)

[1] Instruments and articles may contain hazardous materials
[2] Indicated calibrator source (scaled sources).

Table 4-12 (Concluded)

Description	Nuclide	Activity in μCi
Soils	TRANSURANICS	UNKNOWN
	CD-???	1.61e+02
	AM-241	2.27e+05
	I-129	2.99e+01
	I-131	DECAYED
	U-238	7.13e+01
	PU-239	1.18e+05
	PU-238	7.56e+04
	CM-244	1.93e+04
Nuclear reactor decommissioning	SOURCE, BYPRODUCT, SPECIAL NUCLEAR MATERIALS	UNKNOWN
Ordnance and armor in soils and building materials	DEPLETED URANIUM	UNKNOWN
Soils	CS-137	<1 nCi/gm
	SR-90	<2 nCi/am

Chapter 5
Health and Safety

5-1. General

This chapter provides an overview of health and safety considerations. A more detailed discussion of health and safety considerations is presented in EM 1110-35-1, which should be consulted before beginning a project.

5-2. Responsibilities

USACE has the primary responsibility of ensuring the health and safety of all onsite USACE personnel and overseeing the health and safety practices of all of its contractors. This includes practices that might affect the health and safety of onsite personnel, that might threaten to contaminate the environment, and/or practices that might affect potential offsite receptors.

5-3. Site Safety and Health Plan

To support this responsibility, a site safety and health plan for each project is required by 29 CFR 1910.120 (29 CFR 1926.65 is the parallel Occupational Safety and Health Administration (OSHA) construction regulation at these sites). This document will outline the procedures needed to protect workers against the physical, chemical, and radioactive hazards of a site. This plan is an extremely important document, and each worker must become familiar with the procedures and requirements contained in it, especially those for emergencies. Site safety and health plans are discussed more fully in EM 1110-35-1, EM 385- 1-1 ("Safety and Health Requirements Manual"), and Engineer Regulation (ER) 385-1-92.

5-4. Designated Personnel

It is important to know who to notify in case of an emergency. At all USACE remediation sites, a project team will provide management of all technical activities. This team is composed of an Individual Project Manager who acts as the leader, a Technical Manager, a Field Team Leader, a Site Safety Officer, and a Health Physicist or Health Physics Technician. Any problems related to radiation safety must be reported immediately to the health physicist or health physics technician. All safety problems will be reported to the Site Safety Officer.

5-5. Worker Health and Safety

Protection of both workers and the public against potential dangers at LLRW remediation sites should receive the highest priority. Special precautions relative to LLRW and MW sites include:

a. Medical surveillance.

b. Training.

c. Protective equipment.

d. Decontamination

e. Monitoring.

f. Emergency procedures.

g. Recordkeeping.

Each of these considerations is discussed in detail in EM 1110-35-1.

5-6. References

ER 385-1-92 comprehensively establishes those safety and health documents and procedures required to be developed for LLRW and hazardous and toxic waste activities. 29 CFR 1910.120 should be considered the primary reference for all safety and health-related matters at hazardous waste operations.

Chapter 6
Characterization Methods

6-1. Introduction

The most important activity prior to treatment is the proper characterization of site waste. Chemical characterization is covered in many other documents. The following is a brief summary of radioactive waste characterization issues. Proper characterization of the waste will directly influence the choice of treatment method. It is also important for proper design of a health and safety plan for the site. Field and laboratory methods used to identify and quantify concentrations of radionuclides in the environment are, in many cases, more exact, less costly, and more easily implemented than those employed for chemical analyses. Tables 6-1, 6-2, and 6-3 are taken from *Risk Assessment Guidance for Superfund,* Chapter 10, "Radiation Risk Assessment Guidance" (EPA 199 1). Tables 6-1 and 6-2 list types of laboratory and field radiation detection instruments. Table 6-3 gives lower limits of detection of selected radionuclides. Radioisotopic analytical detection limits are given in Table 6-4.

6-2. Measurement of Beta Radiation

a. Introduction. One key feature in the design of beta measurement techniques that differs from alpha or gamma measurement techniques is that beta particles emerge from nuclear decay with a spectrum of energies characteristic of each nuclide. This causes difficulties in isotope identification. Absolute isotope identification relies upon either spectral measurements or upon chemical separation techniques. Detection and quantification of the total beta radiation are important for radiation protection and in gross beta measurements required for the RI/FS process. Detectors may be designed for the measurement of particle flux (particles/cm^2-see) or for the measurement of dose equivalent (rem or Sv). In some instances, it may be easier or more convenient to use gammas associated with alpha or beta emissions or their daughters to measure the concentrations of the alpha- or beta-emitting radionuclides.

b. Gross beta measurements in water. Measurements of gross beta in water are standardized. The standard technique is described in *Standard Methods for the Examination of Water and Wastewater* (American Public Health Association 1976). The standard method deposits

Table 6-1
Types of Laboratory Radiation Detection Instruments

Type of Instrument	Typical Activity Range (mCi)	Typical Sample Form	Data Acquisition and Display
Gas Proportional Counters	10^{-7} to 10^{-3}	Film disc mount, gas	Ratemeter or scaler
Liquid-Scintillation Counters	10^{-7} to 10^{-3}	Up to 20 mi of liquid gel	Accessories for background subtraction, quench correction, internal standard, sample comparison
Nal(Tl) Cylindrical or Well Crystals	10^{-4} to 10^{-3}	Liquids, solid, or contained gas, <4 mi	Ratemeter
			Discrimination for measuring various energy regions
			Multichannel analyzer, or computer plus analog-to-digital converter
			Computational accessories for full-energy-peak identification, quantification, and spectrum stripping
Ionization Chambers	10^{-2} to 10^{-3}	Liquids, solid, or contained gas (can be large in size)	Ionization-current measurement; digital (mCi) readout, as in dose calibrators
Solid-State Detectors	10^{-2} to 10	Various	Multichannel analyzer or computer with various readout options

Source: EPA (1991)

Table 6-2
Types of Field Radiation Detection Instruments

Instruments	Range of Counting Rate and Other Characteristics	Typical Uses	Remarks
Beta-gamma surface monitors[1] Portable count rate meter	0-1,000; 0-10,000; 0-100,000 count/rein	Surfaces, hands, clothing battery powered	Simple, reliable, (thin walled or thin window G-H counter)
Alpha surface monitors		Surfaces, hands, clothing	Not accurate in high humidity; battery powered; fragile window
Portable air proportional counter with probe	0-100,000 count/rein over 100 cm^2		
Portable gas flow counter with probe	0-100,000 count/rein over 100 cm^2	Surfaces, hands, clothing	Not affected by the humidity; battery powered; fragile window
Portable scintillation counter with probe	0-100,000 count/rein over 100 cm^2	Surfaces, hands, clothing	Not affected by the humidity; battery powered; fragile window
Air monitors			
Particle samplers			
Filter paper (high volume)	400 ft^3/min (1.1 m^3/min)	For quick grab samples	Used intermittently; requires separate counter
Filter paper (low volume)	0.1 to 10 ft^3/min (0.003-0.3 m^3/min)	For continuous room air breathing zone monitoring	Used continuously; requires separate counter
Electrostatic precipitator	3 ft^3/min (0.09 m^3/min)	For continuous monitoring	Sample deposited on cylindrical shell; requires separate counter
Impinger	20 to 40 ft^3/min (0.6-1.1 m^3/min)	Alpha contamination	Special uses; requires separate counter
Tritium monitors Flow ionization chambers	0.10 pCi/m^3/min	Continuous monitoring	May be sensitive to other sources of ionization

[1] None of these surface monitors is suitable for tritium detection.

Source: EPA 1991

the sample on a counting pan by oven or hot-plate drying. Counting is carried out with an internal gas proportional counter. This method is used as a screening technique throughout the United States. If both alpha and beta particle activity are present, they can be separated by measuring the counting rate versus voltage. Two plateaus will be present with the first due to alpha radiation only and the second due to alpha plus beta radiation.

c. Gross beta measurements in air. Air particulate collected on filter paper are counted with either end-window Geiger Muller (GM) tube, thin-window proportional flow counter, scintillation counter, or solid-state detector. The choice of detector depends primarily on whether concurrent gross alpha measurements are desired. In that case, an internal gas proportional counter would probably be chosen. External counting devices can be used to include or exclude alpha particles by varying the window thickness. Because beta spectra are so broad and because of the possible energy-dependent response of many counting instruments, it is desirable to calibrate with at least two or three beta radiation sources of differing energies.

d. Chemical separation techniques. There are many chemical separation techniques. In lieu of separation, one can measure a more easily identified daughter element to determine the concentration of a parent element. Separation may not be necessary when spectroscopic techniques can be used. If the element is a beta/gamma emitter, then gamma spectroscopy can be used. Electron spectroscopy can also be used to measure beta radiation emission. Germanium solid state detectors are utilized in electron spectroscopy.

6-3. Measurement of Alpha Radiation

a. Special considerations. The main difficulty encountered when trying to measure alpha radiation is the extremely short travel distance of the alpha particle. Because of this, detectors must have very thin windows, or the alpha particles are absorbed in the window and

Table 6-3
Lower Limits of Detection for Selected Radionuclides Using Standard Analytical Methods[1]

Isotope	Sample Media[2]	LLD pCi	LLD Bq	Methodology
Co-60	-Water	10	0.4	Gamma Spectrometry
	-Soil (dry wt.)	0.1	0.004	Gamma Spectrometry
	-Biota (wet dry)[3]	0.1	0.004	Gamma Spectrometry
	.Air[4]	25	0.9	Gamma Spectrometry
Sr-90	-Water	1	0.04	Radiochemistry
Ca-137	-Water	10	0.4	Gamma Spectrometry
		0.3	0.01	Radiochemistry
	-Soil (dry wt.)	1	0.04	Gamma Spectrometry
		0.3	0.01	Radiochemistry
	-Biota (wet wt.)	1	0.04	Gamma Spectrometry
		0.3	0.01	Radiochemistry
	-Air	30	1	Gamma Spectrometry
Pb-210	-Water	0.2	0.007	Radiochemistry
	-Soil (dry wt.)	0.2	0.007	Radiochemistry
	-Biota (wet wt.)	0.2	0.007	Radiochemistry
	-Air	5	0.2	Radiochemistry
Ra-226	-Water	100	4	Gamma Spectrometry
		0.1	0.004	Radiochemistry
		0.1	0.004	Radon Daughter Emanation
	-Soil (dry wt.)	0.1	0.004	Radon Daughter Emanation
	-Biota (wet wt.)	0.1	0.004	Radon Daughter Emanation
	-Air	1	0.04	Alpha Spectrometry
Th-232	-Water	0.02	0.0007	Alpha Spectrometry
	-Soil (dry wt.)	0.2	0.007	Radiochemistry
	-Biota (wet wt.)	0.02	0.0007	Alpha Spectrometry
	-Air	0.3	0.01	Alpha Proportional Counter
U-234	-Water	0.02	0.0007	Alpha Spectrometry
U-235	-Soil (dry wt.)	0.1	0.004	Alpha Spectrometry
U-238	-Biota (wet wt.)	0.01	0.0004	Alpha Spectrometry
	-Air	0.2	0.007	Alpha Spectrometry
Pu-238	-Water	0.02	0.0007	Alpha Spectrometry
Pu-239	-Soil (dry wt.)	0.1	0.004	Alpha Spectrometry
Pu-240	-Biota (wet wt.)	0.01	0.0004	Alpha Spectrometry
	-Air	0.2	0.007	Alpha Spectrometry

[1] Note that LLDs are radionuclide, media sample size, and laboratory specific higher and lower LLDs than those reported above are possible. The risk assessor should request and report the LLDs supplied by the laboratory performing the analyses.
[2] Nominal sample sizes: water (1 liter), soil (1 kg dry wt.), biota (1 kg wet wt.), and air (1 filter sample).
[3] Biota includes vegetation, fish, and meat.
[4] Air refers to a sample of 300 m^3 of air collected on a filter, which is analyzed for the radionuclide of interest.

Source: EPA 1991

never make it to the detector. The same feature is a problem with thick samples. A thick sample will actually absorb the alphas being emitted from the far side of the sample, and the detector's reading will only indicate the radiation being emitted from the near side of the sample. Thus, care must be taken in sample preparation and in the choice of the detector window.

Table 6-4
Radioisotopic Analytical Detection Limits

Parameter	Matrix	Method	LIMS Code	Detection Limit
Gross alpha/beta	Water Soil	EPA 900.0/SW9310 SM 7110/SW9310	ABT/900.0/Q4 ABT5/SM7110/Q4	5 pCi/ℓ 25 pCi/g
Gross alpha	Water	EERF00.02/SW9310	RAD/EERF00.02/Q4	5 pCi/ℓ
Gamma scan	Water Soil	EPA 901.1 HASL 300	RAD/901.1/Q4 RAD/GAMMA/Q4	20 pCi/ℓ @ CS 137 2 pCi/ℓ @ CS 137
Radium 2261228	Water Soil	EPA 904.0 HASL 300	RAD/RA226228/Q4 RAD/GAMMA/Q4	2.5 pCi/ℓ 2 pCi/g
Total uranium	Water Soil	ASTM 5174-91 HASL 300	RAD/KPA/Q4 RAD/GAMMA/Q4	1 /ug/ℓ 10 pCi/g
Istopic U	Any	U-NAS-NS-3050	RAD/ISOU/Q4	1 pCi/matrix
Radium 226	Liq.	EPA 903.1	RAD/RA226E,AM/Q4	0.2 pCi/ℓ

b. Alpha spectroscopy. The most common alpha spectroscopic systems depend principally on semiconductor (solid state) detectors. Semiconductor detectors offer the advantages of low background noise, a high resolution capacity, and short analysis times. A silicon diode operated at room temperature is usually used for alpha spectroscopy. If the isotope is an alpha/gamma emitter, then gamma spectroscopy can be used for quantification.

c. Alpha particle measurements in water. Sample preparation is the difficult part of obtaining alpha measurements from water samples. Direct evaporation may result in a residue that absorbs some alpha particle energy and hence is not appropriate for high-resolution spectrometry. For gross alpha measurements, the water sample is dried by oven evaporation just below the boiling temperature, or on a hot plate, and then counted. The sample should be less than 3 mg/cm^2 in thickness. The main error in this procedure is the loss of particles which might become airborne during the drying process. The recovery of gross alpha activity in this procedure has been shown to be in the 85 to 90 percent range. For counting gross alpha radiation, an internal gas proportional counter is recommended. It has high sensitivity, good geometrical efficiency, and reliability. Alternative methods might employ either a thin-window proportional counter or a GM tube. The GM tube has the limitation of not separating alpha particle from beta particle activity.

d. Alpha particle measurements in air. Most alpha particles in air are in particulate form (radon is often described as an alpha particle; it is not, but its daughters are alpha emitters). Gross alpha particle activity in air can be measured by collecting an air sample on a filter and then using any of the detectors sensitive to alpha particles, such as gas proportional counters, scintillators, and semiconductor detectors. Radon and its daughters can be measured in a Lucas chamber, which is a small spherical or cylindrical shell lined with a zinc sulfide scintillator viewed by a photomultiplier tube. The sample, which may contain gaseous or particulate activity, is introduced into the volume and counted directly.

e. Chemical separation techniques. The short range of alpha particles often necessitates the use of chemical separation techniques to concentrate the alpha-particle emitter from the bulk material of the main sample. The initial sample may be water, soil, biological tissue, or an air filter. The final sample may be electroplated onto a metal planchet, precipitated onto a filter, or incorporated into a liquid scintillation sample. Most routine chemical separations employ acid leaching to remove the radionuclides of interest directly from the bulk sample.

6-4. Measurement of Gamma and X-Rays

a. Survey instruments. For absorbed dose measurements in the 150-keV to several-MeV region, the hand-held ionization chamber is the primary survey instrument. Other counters such as GM tubes, gas proportional counters, and scintilla ion counters have serious, energy-dependent sensitivity problems. For survey use that does not require absorbed dose measurements, these other counters can be used with the scintillation counter being the most common. For x- and gamma radiation below 150 keV, scintillation counters are the most useful, with GM counters also frequently used.

b. Gamma and x-ray spectrometry. A gamma ray spectrometer can be used as a laboratory device where samples are counted and also as a field device for performing in situ analysis. The key factors in the choice of instrumentation are efficiency, resolution, background, energy range, sample capability, and cost. Since environmental measurements must be made of species that are many times at very low concentrations, there is a premium on sensitivity. High resolution is required to distinguish a minor activity in the presence of larger activities. Scintillation counters employing a sodium iodide crystal with a thallium activator have been a mainstay of gamma ray spectrometry since 1948. Of main consideration in the choice of an NaI(Tl) system are the crystal size, geometry, and the type of electronic instrumentation. The type of sample and level of contamination dictate these parameters. Semiconductor detectors are stable, reliable, and have good energy resolution. The most commonly used semiconductor detectors are germanium detectors. Silicon detectors are used for gamma spectrometry at low energies. The germanium detectors must be operated at liquid nitrogen temperatures (77° K); however, the silicon detectors can be operated at room temperatures but are inferior in resolution. The germanium detector is not as efficient as the NaI detector but is capable of distinguishing between very closely spaced energies. It is recommended that NaI(Tl) detectors be used to measure one (or a few) radionuclides at very low concentrations and germanium detectors be used to characterize a sample with a large number of radionuclides present. Germanium detectors are much more expensive than NaI(Tl) systems.

6-5. Nonintrusive Drum Imaging Techniques

Drums with unknown waste components pose a special problem to site characterization. Considering the radioactive component of the waste, it is imprudent to perform intrusive sampling. Currently, real-time radiography is used to image the contents of drums. Real-time radiography has limited contrast resolution so that dense objects cannot be imaged and has no three-dimensional imaging capacity. Digital radiography (DR) and computed tomography (CT) are being developed as nonintrusive drum imaging techniques. DR and CT system costs are several times higher because they require sophisticated computers, very precise mechanical systems under computer control, and detectors with much higher dynamic range. CT images represent a cross section of the object without the overlapping of features seen in real-time radiography. DR has much higher contrast resolution because of the detectors used. DR and CT also have the drawback of slower inspection speed, but this is being addressed.

Chapter 7
Collection and Handling of Low-Level Radioactive Waste

7-1. Introduction

Waste collection and handling methods are discussed in EM 1110-1-502. Waste categories addressed include drums, soils, sediments, and groundwater. The methods discussed below are equally applicable to hazardous wastes and radioactive wastes. As discussed previously, the safety precautions that need to be taken differ.

7-2. Drum Handling

a. Background. Many of the problems with uncontrolled disposal sites can, in part, be considered a result of improper drum disposal. Initial estimates of drum locations and contents should be performed by using historical records and previous site personnel. Since each disposal site is different, selection and implementation of equipment and methods for handling drum-related problems must be independently determined. The primary factors that influence the selection of equipment or methods include worker safety, site-specific variables affecting performance, environmental protection, and costs. Site-specific variables include accessibility of the site, drum integrity, surface topography and drainage, number of drums, depth of burial, and the type of wastes present.

b. Detecting and locating drums. Precise estimates of the locations of drums should be determined through the use of historic and background data, aerial photography, geophysical surveying, and sampling. Geophysical methods used for drum location include magnetometry, metal detectors, ground-penetrating radar, and electromagnetic.

c. Environmental protection. Measures to prevent contaminant releases should be practiced at all sites. These include overpacking or pumping the contents of leaking drums. Releases should be contained or mitigated once they have occurred with controls such as perimeter dikes. Uncontrolled mixing of incompatible wastes should be avoided by handling only one drum at a time during excavation. Drum-opening activities should be isolated from staging and working areas. In addition, nonsparking tools and explosion-proof pumps should be used when handling unknown wastes.

d. Drum integrity. The excavation and handling of damaged drums can result in spills which may seriously jeopardize worker safety and public health. Any drum that is critically swollen should not be approached. The drum should be handled only by remotely controlled equipment. Generally a drum is inspected visually to check for corrosion, leaks, swelling, etc. However, worker safety should be stressed during this inspection.

e. Drum opening, sampling, and compatibility. Container opening and sampling should be conducted in an isolated area. Remotely controlled drum opening and sampling techniques should be used when possible. Compatibility testing is required prior to bulking, storing, or shipping of the containers. Compatibility testing should be rapid using onsite procedures for assessing waste reactivity, volubility, presence of oxidizer, water content, acidity, etc.

f. Treatment options. The drums can be overpacked, compacted, contents transferred to new drums, contents removed and treated separately, or contents solidified to facilitate handling.

7-3. Excavation of Contaminated Soils

a. Design considerations. Where offsite treatment methods are to be used, excavation and transportation of the waste material will be required. Important factors that should be considered before beginning excavation are worker exposure and the bearing capacity of the site for heavy equipment. Both USACE and OSHA regulate worker safety in open excavations. The following equipment can be used for excavation:

b. Mechanical methods. Typical excavation equipment includes draglines, backhoes, and clamshells.

(1) Dragline excavator. A dragline excavator is a crane unit with a drag bucket connected by cable to a boom. The bucket is filled by scraping it along the top layer of soil toward the machine by a drag cable. The dragline can operate below and beyond the end of the boom. Maximum digging depth of a dragline is approximately equal to half the length of the boom, while digging reach is slightly greater than the length of the boom. Draglines are very suitable for excavating large land areas with loosely compacted soil.

(2) Backhoes. The backhoe unit is a boom or dipper stick with a hoe dipper attached to the outer end.

The unit may be mounted on either crane-type or tractor equipment. Commonly used backhoes will dig to a maximum depth of about 14 m (45 ft). Deeper digging depth can be achieved by attaching long arms to one-piece booms or by adjusting the boom angle on two-piece booms. Some hydraulic backhoes having booms that can be extended up to 31 m (100 ft) or retracted for close work can be used to excavate, backfill, and grade.

(3) Clamshells. To achieve deeper digging depth, clamshell equipment must be used. A clamshell bucket is attached to a crane by cables. A clamshell excavator can reach digging depths of 15 m (50 ft) or more.

7-4. Excavation of Contaminated Sediments

a. Dredging. Uncontrolled waste disposal sites may contaminate bottom sediments in water bodies. Sediments tend to concentrate pollutants so they may actually be contributing more to the contaminant problem than the water. Dredging serves the same basic function as mechanical excavation. Several types of dredges are commonly used, including hydraulic, pneumatic, and mechanical dredges. A knowledge of the physical properties and distribution of contaminated sediments is essential in selecting a dredging technique and planning the dredging operation. Information on grain size, bed thickness, and source and rate of sediment deposition is particularly useful. Such information can be obtained through a program of bottom sampling or core sampling of the affected sediment. The following equipment can be used for dredging:

b. Hydraulic dredging. Available techniques for hydraulic dredging of surface impoundments include centrifugal pumping systems and portable hydraulic pipeline dredges. Centrifugal pumping systems utilize specially designed centrifugal pumps that cut heavy, viscous materials as pump suction occurs. The special chopper impeller devices within these pumps allow high-volume handling of heavy sludges without the use of separate augers or cutters. Pipeline dredges loosen and pick up bottom material and water and discharge the mixture through a float-supported pipeline to an offsite treatment or disposal area. For larger jobs, a standard butterhead dredge may be required.

c. Low-turbidity hydraulic dredging. Low-turbidity dredging minimizes the resuspension of bottom materials that may occur during the operation. Conventional dredging may cause excessive agitation and resuspension of contaminated sediments, which decreases sediment removal efficiency. This may also lead to downstream transport of contaminated materials, thereby worsening the pollution problem. Low-turbidity dredging systems include conventional dredges that are modified using special equipment for turbidity control.

d. Mechanical dredging. Mechanical dredging of contaminated sediments should be considered under conditions of low, shallow flow. Under any other conditions, mechanical excavation with draglines, clamshells, or backhoes may create excessive turbidity and cause uncontrolled transport of contaminated sediments further downstream. A more efficient mechanical dredging operation is the dewatering of the impoundment followed by excavation.

e. Design considerations. The selection of dredging equipment or pumping systems for the removal of contaminated materials will depend largely on manufacturer specifications for a given dredge vessel or pump system. Important selection criteria that will vary from site to site are:

(1) Surface area and maximum depth of the impoundment.

(2) Total volume of material to be dredged.

(3) Physical, chemical, and radiological nature of sediments.

(4) Pumping distance and total head.

(5) Presence of bottom liner in impoundment.

(6) Type and amount of aquatic vegetation.

(7) Power source for dredge.

(8) Ease of access and size and weight limits of roads.

For additional, detailed information on dredging technology, see EM 1110-2-5025.

7-5. Removal or Isolation of Contaminated Groundwater

a. Wellpoint systems. Two common groundwater pumping systems use either wellpoints or extraction/injection wells. Wellpoint systems use a series of wells in order to lower the water table. The system consists of a group of closely spaced wells, usually connected by a header pipe and pumped by suction centrifugal pumps,

submersible pumps, or jet ejector pumps. The drawdown depressions formed by the well network effectively lower the water table. Wellpoint systems are generally used at sites with relatively shallow water tables and fairly permeable soils. The hydraulic gradient, transmissivity, and storage coefficients affect the rate of flow.

b. Extraction/injection well systems. In most cases, contaminated groundwater at waste sites is contained by installing extraction wells to extract groundwater from under the site, collecting contaminants leaking from the waste and creating a local gradient toward the site. Extraction trenches may be economical and more effective than extraction wells in the case of shallow contamination. Trenches offer the advantage of providing a continuous line of catchment compared to a line of wells, though depths are limited in practice and excavation quantities (of potentially contaminated materials) can be large. Whether by well or trench, water withdrawn from under the site will then be treated before disposal or reinfection into the aquifer. This system is also effective for plume containment. An example of an effective system for plume containment is currently operating at the Rocky Mountain Arsenal. Groundwater is extracted, treated, and recharged through injection wells on the downgradient side of an impermeable barrier (slurry wall). The extraction and injection systems are separated by an impermeable barrier to prevent mixing of contaminated and uncontaminated water. As a less costly alternative to recharging water through injection wells, seepage or recharge basins can be used.

c. Subsurface barriers. The most common subsurface barriers are slurry-trench cutoff walls, grout curtains, sheet-pile cutoff walls, membranes and synthetic sheet curtains, and combination barrier/pumping systems.

(1) Slurry-trench cutoff walls. Slurry trenching redirects or impedes groundwater flow. Slurry walls are fixed underground barriers formed by pumping a soil or cement, bentonite, and water mixture into trenches. The soil-bentonite trench filling is produced by backfilling. The cement-bentonite slurry is allowed to set. The slurry used in the soil-bentonite mixture is essentially a 4- to 7-percent by weight suspension of bentonite in water. For the cement-bentonite slurry, a 90-day minimum set time is important. When the slurry wall is placed upgradient of the waste site, it will force the groundwater to flow around the wastes. In certain settings, a slurry wall can be installed to completely surround the site. The groundwater inside can then be extracted and treated. Grades of 10 percent and higher provide problems for slurry wall construction. Groundwater chemistry can severely affect the behavior of the bentonite slurry. Compatibility tests should be performed with the actual leachate from the waste site.

(2) Grout curtains. Grouting consists of the injection of one of a variety of special fluids or particulate grouts into the soil under high pressure. Because a grout curtain can be three times as costly as a slurry wall, it is rarely used when groundwater has to be controlled in soil. The major use of grout curtaining is to seal voids in porous or fractured rock where other methods of groundwater control are impractical. Ninety percent of all the grouting done in the United States is with portland cement. For grouting, a water-cement ratio of 0.6 or less is more effective. Grout curtaining is a very complex operation, with the number of U.S. firms engaged in this practice quite limited. Incompatibility with the groundwater chemistry can cause the same problems here as in slurry wall construction.

(3) Sheet-pile cutoff walls. Sheet-pile cutoff walls constitute a permeable passive barrier composed of sheet-piling permanently placed in the ground. Each section interlocks with an adjacent section by means of a ball/socket union. The connection may initially be a pathway for groundwater migration, which may cease if the section is naturally or artificially filled with impermeable material. Steel sheetpiling is most frequently used. Concrete has been used and is attractive when exceptional strength is required. Sheet-piles are typically used in soils that are loosely packed and predominantly sand and gravel in nature. Maximum effective piling depth is considered to be 15 m (49 ft). A pile life of up to 40 years can be expected where pH ranges between 5.8 and 7.8. A pH as low as 2.3 can shorten the lifetime to 7 years or less. Site characteristics should be investigated thoroughly to determine if the site is compatible with sheetpiling.

(4) Membranes and synthetic sheet curtains. Synthetic membrane materials such as PVC, butyl rubber, and polyethylene can be used in a manner similar to clay or sheet-pile cutoff walls. It is difficult, however, to emplace the curtain without puncture or imperfect sealing. Soil and atmospheric temperatures affect the flexibility as well as the sealing characteristics of the membrane.

(5) Combination barrier/pumping systems. When used in combination, the general approach is to use the barrier system to minimize the quantity of groundwater that must be pumped and treated. The most common application of a combination barrier/pumping system is

the use of a circumferential slurry wall, constructed into an underlying aquiclude, combined with an interior pumping system to maintain an inward hydraulic gradient.

7-6. Decontamination of Equipment

Methods of decontaminating the equipment described in this chapter are given in Chapter 8, Section 8-3.

Chapter 8
Treatment of Low-Level Radioactive Waste

8-1. Introduction

This section provides descriptive information on treatment techniques for LLRW. The processes described must be adjusted for site-specific conditions to ensure appropriate technology application. Because waste treatment must consider so many materials and conditions, good reliable treatability data are essential. Final designs must be based upon field data ascertained from bench and/or pilot plant scale testing of specific waste streams. Many of the methods discussed in this chapter are also relevant to mixed waste, Chapter 12, and vice versa. Since radioactivity cannot be reduced, except by time, the primary objectives are usually to reduce waste mobility and the risk of intrusion. The usual methods are transfer, concentration, confinement, and isolation.

8-2. Volume Reduction of Solids

a. Compaction.

(1) General description. Compaction is performed in order to reduce the waste volume. Waste being sent to the Envirocare of Utah site does not need to be compacted. Compaction also concentrates the radionuclides, which may then add to the hazard, as well as the transportation and disposal costs, of the waste. It should first be determined whether compaction is beneficial to the treatment and disposal scheme of each waste.

(2) Regulatory oversight. While the treatment of LLRW by compaction must be carried out under an NRC or Agreement State license, no specific regulations exist that require the proapproval of a compactor design by a federal or state regulatory agency or that provide specific guidance for compactor design and operation. Operators of compactors for processing low-level radioactive waste are required by 10 CFR 20 to maintain exposures of employees and public to levels that are as low as reasonably achievable (ALARA). Releases of airborne radioactivity are regulated under the Clean Air Act radionuclide provisions and Appendix B of 10 CFR 20. Other individual state and local permits may also be required. Compactors are also required to meet OSHA requirements established in 29 CFR 1910 to protect operators from hazards other than radiation.

(3) Compatible and noncompatible wastes. Dry waste is sometimes categorized as either compatible or noncompatible. Plastics, paper, absorbent material, and cloth are compatible in conventional compactors. Metal pipe, valves, conduit, wood, and other like items are compatible in supercompactors. The following describe major types of compactors:

(4) Drum compactors. The most widely used compactor for LLRW is the drum compactor shown in Figure 8-1. This unit consists of an electrically driven pump, a hydraulic cylinder to which the platen is attached, and a ventilation system comprised of a prefilter, an HEPA (high-efficiency particulate air) filter, and a fan. Drum compactors, also called conventional compactors, usually employ 10 to 30 tons (45 to 133 N) of force for compaction. Conventional compactors require sorting to remove objects resistant to pressures of approximately 30 psi (207 kPa).

(5) Box compactors. A box compactor is similar to a drum compactor except that the waste is compacted into boxes. As shown in Figure 8-2, the design of a box compactor consists of a compactor/ram, hydraulic unit, filter system, and controls. The compactor/ram unit is completely enclosed in steel to provide protection from flying particles and radiation shielding, and to control airborne particulate. Box compactors can accept larger objects and utilize space more efficiently than drum compactors. Box compactors use forces of approximately 250 tons (1, 112 N) for compaction. Box compactors allow noncompatible material to be placed into the bottom of a disposal package with compatibles on top.

(6) Supercompactors. Essentially, supercompactors are extensions of conventional and box compactors with more powerful hydraulic drivers. All supercompactors are designed with an enclosure and equipped with air filtration systems to restrict the release of airborne contaminants. Supercompactors are available as either fixed-base or mobile units. Figure 8-3 shows the Westinghouse/Hittman mobile unit. The unit employs a 1,000-ton (4,448-N) hydraulically operated compactor mounted in a 40-ft (12-m) trailer. Supercompactors are able to compact some materials previously considered noncompatible by using forces greater than 1,000 tons (4,448 N). The supercompactor operated by Scientific Ecology Group, Inc. (SEG) has a compaction force of 5,000 tons (22,000 N). It will seldom be economical to send waste to a supercompactor if it has already been compacted to 50 to 55 lb/ft^3 (800 to 880 kg/m^3). A supercompactor will remove liquid from the waste. Supercompaction will compact otherwise noncompatible material such as wood, conduit, small diameter piping,

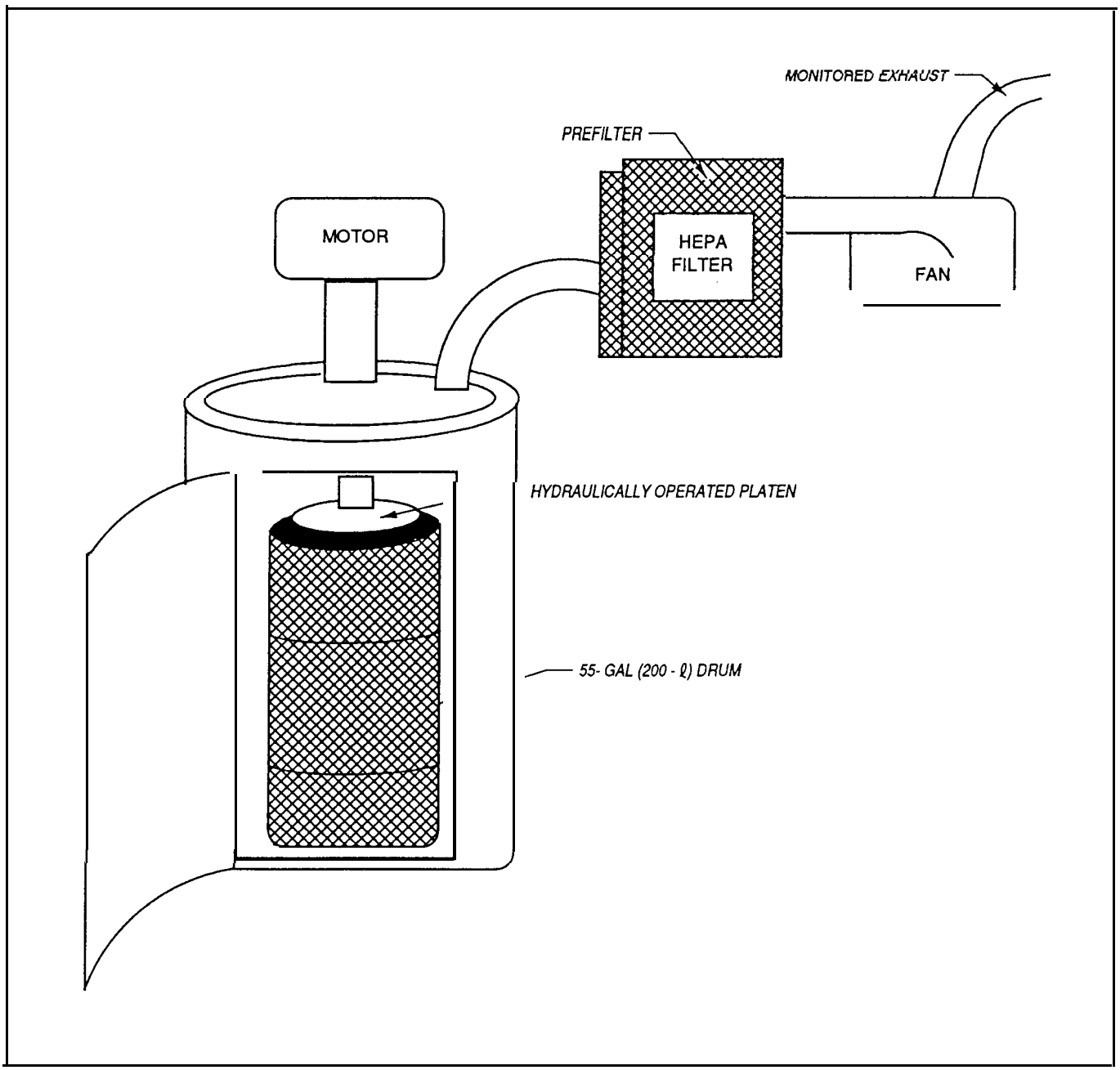

Figure 8-1. Conventional compactor (Copyright © 1991. Electric Power Research Institute. EPRI NP-7386-VI. *Radwaste Desk Reference. Volume 1: Dry Active Waste.* Reprinted with per mission.)

small pumps, and valves. An example of a super-compactor is the Defense Consolidation Facility located in Barnwell, SC. The Corps and other members of the Services had used this facility to compact LLRW- contarninated items including very large equipment, prior to disposal at Barnwell, SC. Advantages and disadvantages of these compactors are compared in Table 8-1.

(7) costs. In the power industry, dry waste is usually compacted in 55-gal (200-1) steel drums (7.5 ft^3 or 0.2 m^3 burial volume) or in metal boxes (98 ft^3 or 2.8 m^3 burial volume). When choosing which type of compactor, the cost savings from volume reduction, labor, operating and maintenance costs of the compactor, and the volume of compatible waste enter into the

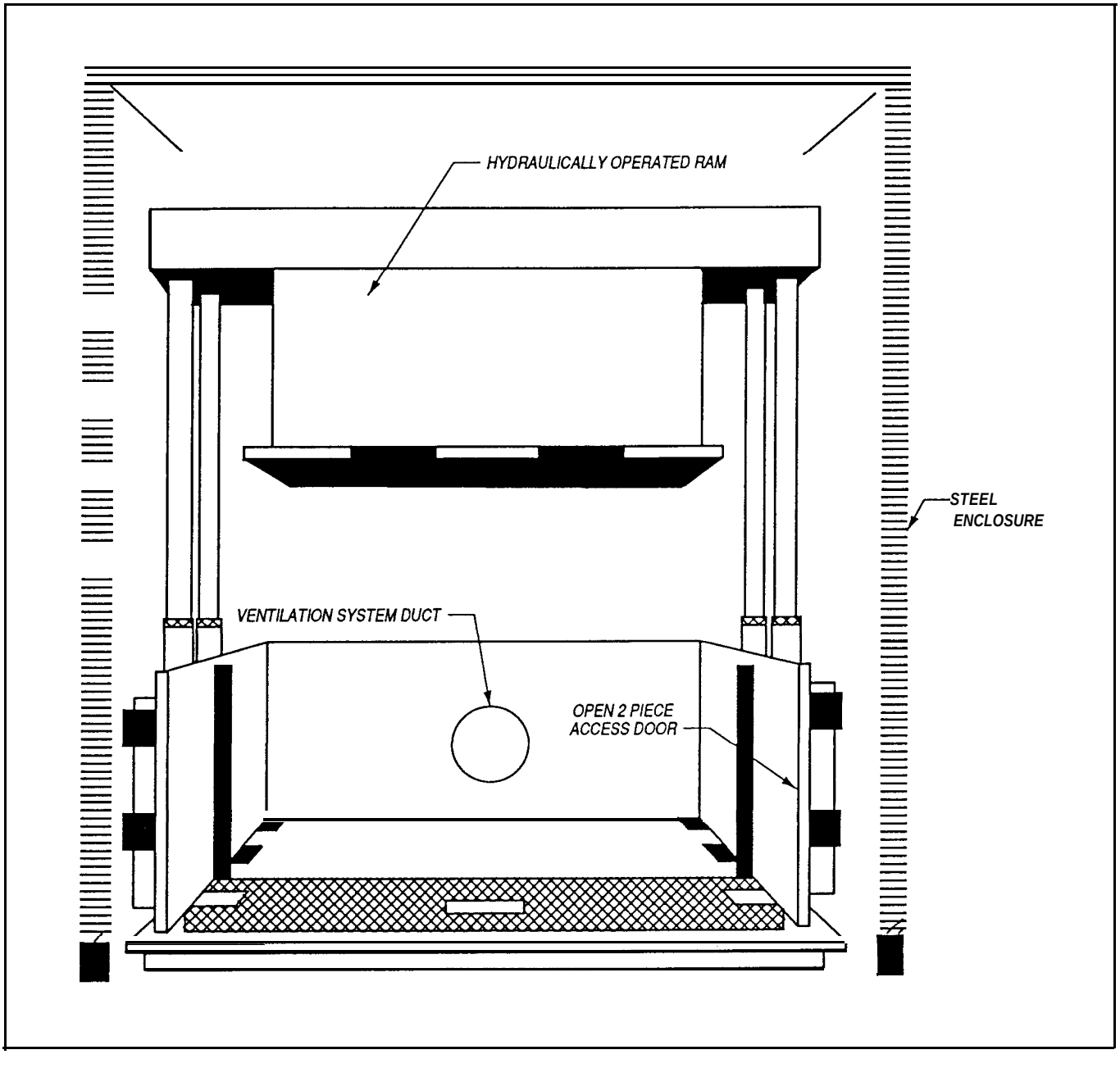

Figure 8-2. Typical box compactor (Copyright © 1991. Electric Power Research Institute. EPRI NP-7386-VI. *Radwaste Desk Reference, Volume 1: Dry Active Waste.* Reprinted with permission.)

economic comparison. A typical drum compactor will cost $25,000 - $80,000 (1991 dollars), and a box compactor will probably cost $125,000 - $250,000 (1991 dollars). Installation costs should also be included in the comparison, with box compactors using less labor than drum compactors. Installation costs for a typical 55-gal (200-1) drum are approximately $28 (1991 dollars), while the cost of installing a box is approximately $500 (1991 dollars). A single drum compactor can easily become overloaded, so for large waste volumes the box compactor might be the only viable option.

(8) Anti-springback devices for drums. An anti-springback device holds in place material that has been compressed. The basic design and material determine its effectiveness. The most common anti-springback devices

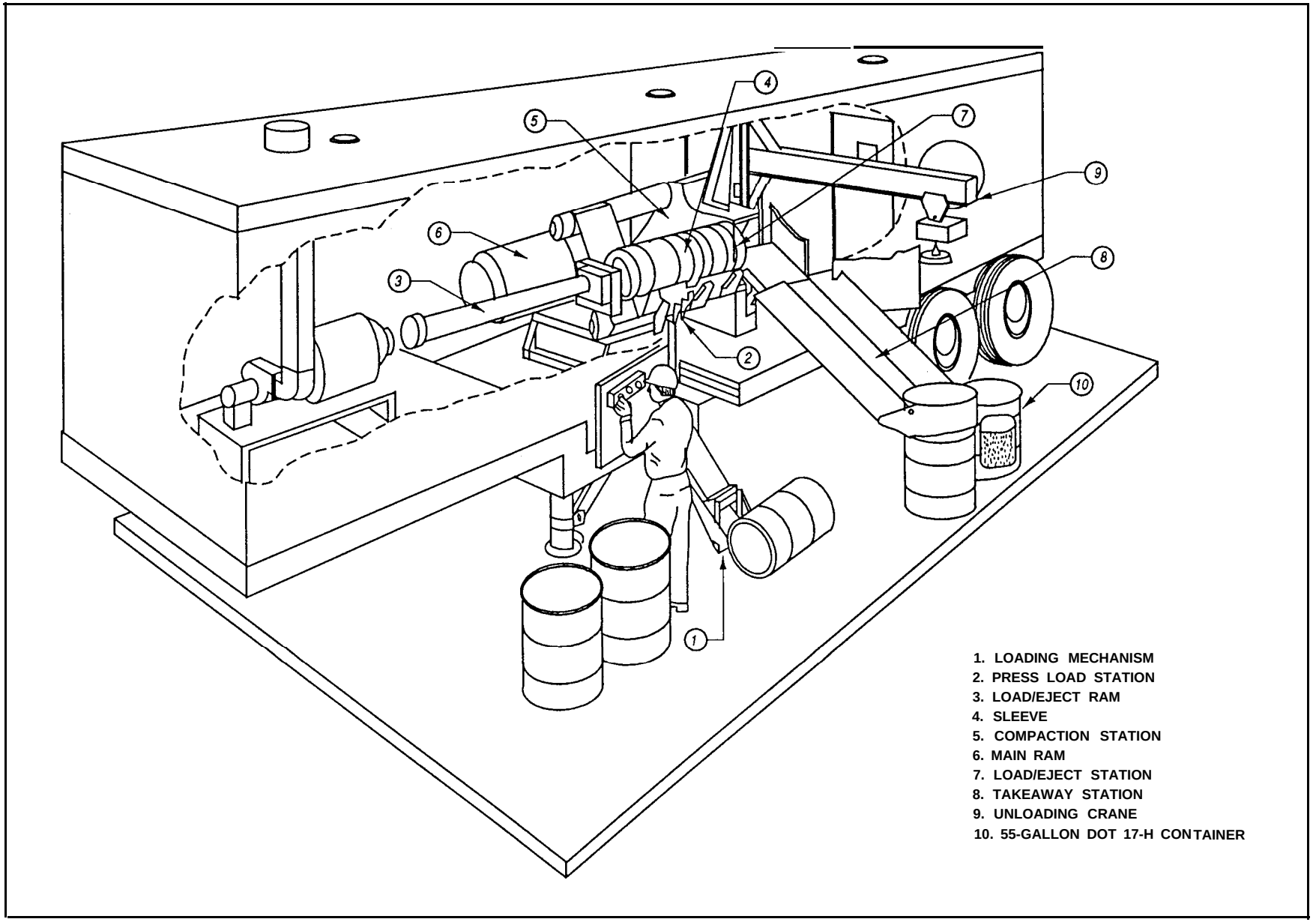

Figure 8-3. Mobile supercompactor (Copyright © 1991. Electric Power Research Institute. EPRI NP-7386-V1. *Radwaste Desk Reference, Volume 1: Dry Active Waste.* Reprinted with permission.)

Table 8-1
Advantages and Disadvantages of Compactors

Advantages	Disadvantages
I. Conventional compactors	
• Low capital cost	• Mechanical components will require periodic maintenance
• Requires only one operator	• Potential of oil leaks in the hydraulic lines
• Reduces the number of drums shipped off site, therefore reducing: - Transportation cost Burial cost - Paperwork required for off site disposal	• Requires use of an overhead crane or forklift with drum grab attachment
• Minimal floor space required	
II. Box compactors	
• Large receptor opening is convenient for large pieces of waste	• Increased capital and individual container disposal cost
• Large waste containers result in fewer containers to be shipped offsite and corresponding reduction in paperwork	• Two operators are required to place lid on waste container
• Hydraulic unit that may require servicing can be located in a nonradioactive area, thus reducing worker exposure during maintenance activities	• Forklifts may be required to handle waste containers
. Containers usually contain skids and do not require pallets as do drums	• Occupies more space
• Container shape more efficient for storage, transportation, and disposal	
III. Supercompactors	
• Dry active wastes previously considered noncompatible are compatible, including pipes, valve bodies, and other metal products	• Large capital investment
• Storage space previously occupied by wastes that were considered no longer compatible is reduced	• Requires large amount of floor space
• Storage space at regional burial sites can be reduced	• Due to high compressive forces, the equipment may require more maintenance than other compactor types
• Relatively simple to operate	• Liquid waste from punctured capsules may be released during compaction

Source: DOE 1988

are cardboard disks, Teflon disks, metal disks, and box-type devices. Twenty-five to fifty percent more waste can be packaged using anti-springbacks.

(a) Cardboard disks. Cardboard disks are the simplest devices; however, they are not recommended because the cardboard cannot withstand much force. A piece of round cardboard is placed in the drum before compaction, and the drum hoops hold it.

(b) Teflon disks. A more effective device is the Teflon disk, which is a patented product of Cromwell Welding Company (Figure 8-4). The edge of the disk is angled so it can be pushed into a drum hoop by the compactor ram. By using these devices, drums can be compacted to 55 lb/ft^3 (880 kg/m^3). The Teflon disk can deform the drum by collapsing a hoop or ring. This may occur when compacting pressures are 60,000 psi (413,000 kPa) or more. Teflon disks may also expand the diameter of a thin-walled drum and reduce the effectiveness of the anti-springback device. Usually, 16-gauge drums are used when compressing waste at high force with Teflon disks.

(c) ESSI disk. Electro-Sonics, Inc., has patented the ESSI anti-springback system (Figure 8-5). This system is a sheet metal disk with four metal clips that slide one way on threaded rods. After being pushed down by the ram, the metal disk prevents springback. Gross drum weights exceeding 500 lb (66 lb/ft^3) or 227 kg (1,056 kg/m^3) are claimed to be achieved with this system. The greatest drawback to the ESSI system is

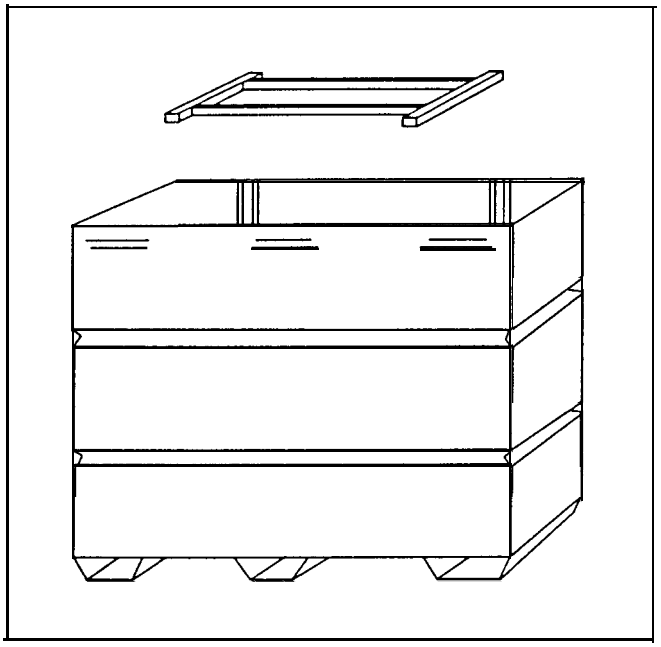

Figure 8-6. Box type anti-springback device [Copyright © 1991. Electric Power Research Institute. EPRI NP-7386-VI. *Radwaste Desk Reference, Volume 1: Dry Active Waste.* Reprinted with permission.)

(10) Maintenance. The most common problem in compactor maintenance is filter clogging. This can be corrected with proper prefilters and routine prefilter and filter changes.

(11) Mixed waste. If a compactor is to be used to treat mixed waste, it may be required to be permitted under RCRA as a treatment facility (40 CFR 264). Compacted mixed waste must be disposed of in accordance with RCRA requirements whether or not the compaction facility is RCRA permitted.

b. Cutting, crushing, shredding.

(1) Cutting. Cutting and sawing operations are carried out mainly on large items which consist usually of metals or plastics. This waste has to be reduced in size to make it fit into packaging containers or to submit it to treatment such as incineration. The cutting is carried out either in the dry state in cells, using remote control when necessary and with conventional tools, or underwater. The cutting may also be done with plasma-jets, laser torches, or explosive fuses.

(2) Crushing. Crushing techniques may be used for size reduction of friable solids (e. g., glass, concrete, ceramics). Crushing increases the apparent density of the waste. In principle, all types of mill, grinder, and crushing machines of conventional technology can be used.

(3) Shredding. Shredding reduces void space and is particularly effective when plastics are compacted. Air, which is trapped between the folds of bulk plastic and in plastic bags and sleeving, takes up storage space. When the plastic is shredded, better use is made of the waste container space. Recent studies show that when compacting pressures exceed 55 lb/ft^3 (880 kg/m^3), shredding makes little difference.

(a) High-speed shredders. The two types of shredders used for size reduction are high-speed shredders and low-speed shredders. High-speed shredders include hamrnermills and flailmills. High-speed shredders have several disadvantages in a nuclear environment:

- Due to their high operating speeds, they are very susceptible to exploding when encountering unshreddable materials such as steel plates. Therefore, waste must be thoroughly sorted.

- Harnmermill installations require daily maintenance (hardfacing and/or replacement) of the hammers. Liners must also be periodically replaced. This level of maintenance is unacceptable in the nuclear environment where workers would be exposed to radiation during such maintenance.

- In the smaller capacity range they have a limited open area for feeding waste material and are not amenable to the feeding of boxed or packaged wastes.

- They require considerably more horsepower than a comparably sized low-speed shredder.

(b) Low-speed shredders. Low-speed shredders are generally used for LLRW applications. Batch and conveyor feeding can be accomplished with a low-speed shredder. The effectiveness of the shredder depends on the composition of waste being shredded and the desired method of processing or disposal of the waste after shredding. Requirements for a shredder will vary depending on whether the shredded waste is next compacted, incinerated, or loaded directly into drums for disposal. Standard 55-gal (200-/) steel drums can be easily handled in low-speed shredders.

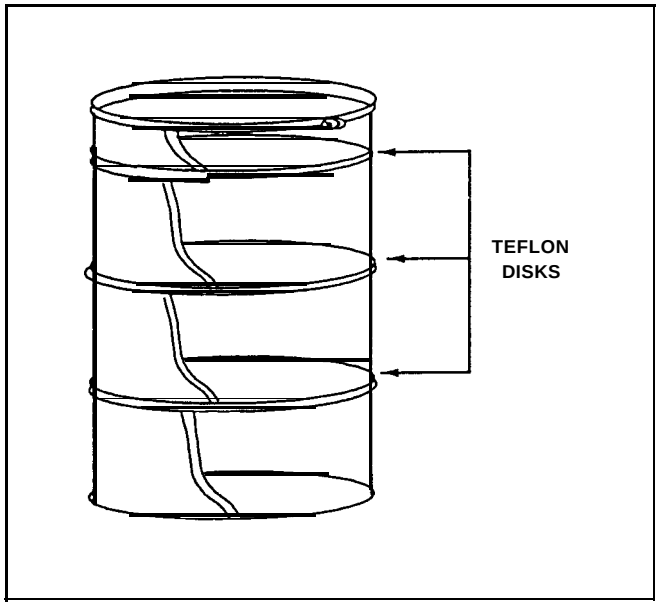

Figure 8-4. Teflon disk anti-springback device (Copyright © 1991. Electric Power Research Institute. EPRI NP-7386-V1. *Radwaste Desk Reference, Volume I: Dry Active Waste.* Reprinted with permission.)

that inexperienced operators sometimes misalign the disk so that it twists out of place. An extension ring, alignment fixtures, or tape markings should end this problem.

(d) Anti-springback devices for boxes. Anti-springback devices for box compactors work much the same as those for drum compactors. One device locks into the recessed or indented sides of a box (Figure 8-6). A more effective device has ribbed guides welded to the sides of the box. An anti-springback device is placed on top of the waste before compression, and the tips slide into the guides and lock under the ribs of the box. Extenders to place the anti-springback device above the top of the box save time and dose. Waste can be compacted up to 45 lb/ft^3 (720 kg/m^3) using this device.

(e) Disadvantages of anti-springback devices. No anti-springback devices used in drums prevent supercompaction. However, anti-springback devices with vertical support rods may resist compaction in some supercompactors. When they buckle in the middle, they can puncture the compacted drum or damage the compaction chamber. When used properly, vertical rod anti-springback devices are so effective that supercompaction will not be cost-effective. Anti-springback devices used in boxes can interfere with supercompaction. Vendors normally empty boxes for reuse, but box type anti-springbacks are designed to be permanent. Removing

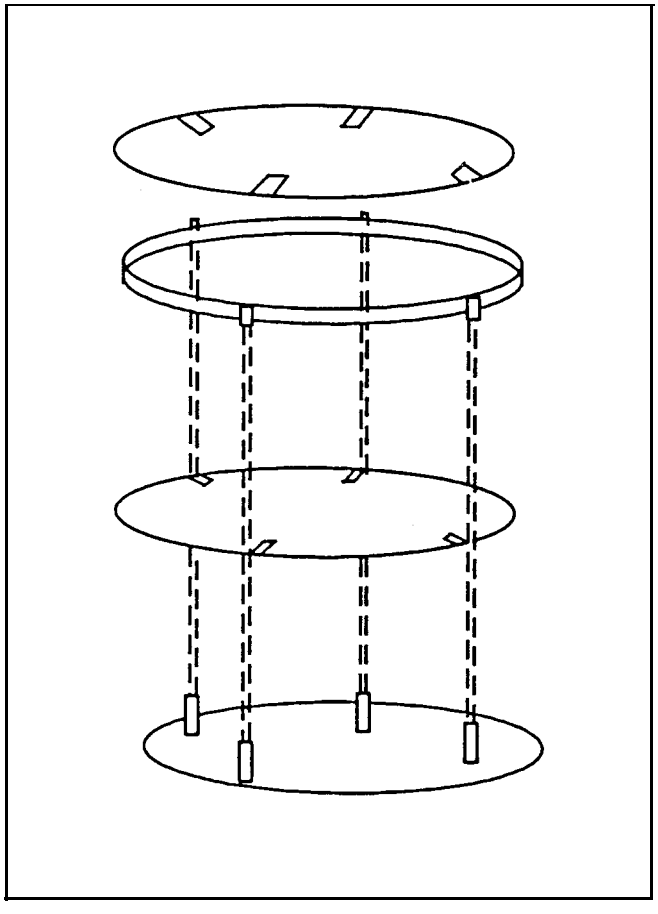

Figure 8-5. Electro-sonic anti-springback device (Copyright © 1991. Electric Power Research Institute. EPRI NP-7386-V1. *Radwaste Desk Reference, Volume I: Dry Active Waste.* Reprinted with permission.)

anti-springbacks from boxes is labor-intensive, dangerous, and expensive.

(9) Ventilation. There are no specific requirements for ventilating compacting systems, although all systems should have ventilation. The most common methods for ventilating compactors include:

(a) Ventilation exhaust with HEPA filters built into the compactors.

(b) Portable exhaust ducted from the compactor or the top of the waste container.

Governing guidelines are good health physics practices, such as drawing air away from the worker toward more highly contaminated areas. These systems may require an inert gas blanket system to reduce the fire risk if pyrophoric solids are processed.

(c) Maintenance. Shredders need frequent cleaning to prevent a buildup of contamination on blades. This buildup may add to the radiation dose rate and may become airborne. It is also very important to keep stray metal parts out of shredders.

(d) Costs. Capital costs for shredders range between $135,000 and $460,000 in 1988 dollars. Total system costs vary considerably because of the effect of site-specific concerns and required ancillary equipment. Shredders are most often used in conjunction with other treatment or volume reduction technologies. Shredders can be used with mixed waste but may have to be permitted under RCRA. More detailed information concerning shredders can be found in the *Resource Manual* (DOE 1988) or from numerous vendors.

c. Incineration.

(1) Introduction. Incineration as a hazardous waste treatment technology is discussed in EM 1110-1-502. Major differences in using incinerator technology for LLRW involve shielding requirements, use of HEPA filters, and methods of ash disposal. Incineration is primarily a volume reduction technique. It has a secondary benefit in the destruction of hazardous organic chemicals often present in mixed waste. In all instances, incineration will produce a final product, which is ash, with a higher radionuclide concentration. This ash must be treated before disposal.

(2) Incinerable wastes. Incineration is well-suited to handle combustible solids and sludges and can also handle liquids and gases. Incineration of plastics can lead to the formation of acid gases that may require gas scrubbing equipment.

(3) Rotary kiln incineration. Rotary kiln incineration employs a rotating, inclined combustion chamber which mixes combusting materials as it rotates. Wastes are fed into the chamber at the high end, along with air and auxiliary fuel. Exhaust gases are treated and released, and ash residue is collected on the low end of the kiln.

(4) Fluidized bed incineration. In a fluidized bed incinerator, a bed of inert particles (e.g., sand) lies at the bottom of the cylindrical combustion chamber. Air is forced up through the bed and the particles are fluidized. Wastes and fuel are injected at the top of the chamber, into the fluidized mass, where the mixture combusts. The turbulent atmosphere in the chamber provides good mixing of wastes to ensure complete combustion and efficient heat transfer.

(5) Circulating bed incineration. Wastes and auxiliary fuel are introduced into the combustion chamber in a circulating bed incinerator. Air is forced up through the chamber from the bottom to promote mixing and complete combustion. Particulate and gaseous products of combustion exit from the top of the combustion chamber for treatment and disposal.

(6) Infrared incineration. In infrared incineration, waste materials are fed into the furnace on a conveyor belt, and pass through on a wire mesh belt. Heating elements provide infrared energy, oxidizing the materials. Waste gases are passed through a secondary combustion chamber; ash exits on the conveyor.

d. Pyrolysis.

(1) Description. This technology is capable of providing volume reduction, dispersal of gases and vapors, and the immobilization of particulate. Pyrolysis is similar to incineration but employs a lower temperature and effects thermal dissociation of the waste in the absence of oxygen. Most compounds are reduced to their elemental form and are discharged primarily as carbon monoxide and hydrogen. If the pyrolyzer design includes a molten glass reservoir, heavy metals from the waste can be trapped in the glass bed. With a large unit, the flammable gaseous effluents (CO and H_2) can be recirculated for their fuel value. Alternatively, these effluents can be recombined with oxygen and released as carbon dioxide and water.

(2) Applications. Pyrolysis has applications similar to incineration (e.g., disposal of solid long-lived radionuclides, pathological and toxic wastes, organic solvents, oils, and spent resins) but is particularly applicable to waste materials that generate toxic chemicals upon ordinary incineration or retain radionuclides in the ash since these toxic chemicals and ash would have to be vitrified and encased as a stable inert glass form.

e. Soil washing.

(1) Introduction. Soil washing can be performed in situ or ex situ and consists of using a dilute solvent that is selective for the contaminants to be treated. Soil washing may be effective when there is an inverse relationship between particle size and contaminant concentration. Soil washing is effective for the remediation of soils with a high content of large particle size material (>90 percent sand and gravel). After size separation, a large portion of the radioactive material may be concentrated in the

fine material, leaving a minor portion in the coarse material. The coarse material may then contain low enough amounts of radioactive material for replacement onsite. Soil washing has been successfully demonstrated on soils contaminated with strontium, cesium, technetium, radium, uranium, thorium, barium, and lead. Soil washing can also be used for mixed wastes contaminated with organics or heavy metals.

(2) Ex situ process description. The soil treatment process combines dissolution with dilute selective solvents, contaminant recovery, and solvent regeneration to provide a continuous recirculating treatment process. The solvent chemistry combines well-established carbonate recovery chemistry with a chelant and an oxidant. Countercurrent extraction is used to dissolve and recover the contaminant in the ex situ treatment process. The number of extraction stages and the contact time in the extractors is determined based on the contamination level in the soil, the physical and chemical characteristics of the soil, and the level to which the soil must be treated. Removal factors (the ratio of the contaminant level in the feed material divided by the contaminant level in the treated material) of 10 to 20 are typically achievable. The solvent is regenerated by either selective ion exchange or evaporation.

(3) In situ process description. For the in situ treatment process, the recovery process is modified to accommodate the high flow rates and the potential presence of soil fines in the recirculating solvent. For in situ applications, the soil to be treated would be flushed with dilute solvent. The solvent would be recovered by horizontal recovery wells. There will be a small fraction of soil fines in the recovered solution. Magnetic separation is used to recover the contaminant.

(4) Advantages and disadvantages. Advantages and disadvantages of soil washing are presented in Table 8-2.

(5) costs. Costs for removal and burial to the former Nevada test site were reported to be approximately $1,240/m3. Current (1994) costs are approximately $250/m^3 at Envirocare of Utah and approximately $1,600/m3 at U.S. Ecology at Richland, WA. However, costs for specific projects may differ substantially depending on volume, level of contamination, and current competition. Also, all wastes may not be accepted at all sites. Bradbury et al. (1992) estimated that the cost for soil washing would be between 20 and 50 percent of the cost to remove and bury the contaminated soil.

Table 8-2
Advantages and Disadvantages of Soil Washing

Advantages	Disadvantages
Free release of treated soil	Not a well-established treatment technology
Cleaned soil supports vegetated growth	Solvent is added to soil which may make this a hazardous waste and may create a public relations problem Significant reduction in the amount of waste for disposal
Can be performed onsite	

f. Segregation of soil according to radioactivity at Johnson Atoll. An innovative technique has been developed for removing mixed plutonium and americium contamination from the coral soil matrix at the Defense Nuclear Agency's (DNA's) Johnston Atoll site. The system used arrays of sensitive radiation detectors coupled with sophisticated computer software designed by the Eberline Instrument Corporation. The software controls the segmented gate system for removing contaminated soil from a feed supply moving on conveyor belts. Contaminated soil is diverted to either (1) a metal drum where the larger sized, "hot" (over 5,000 Bq) particles are collected, or (2) a supplementary soil-washing process where dispersed, low-level contamination is washed from the soil fraction made up of very small-sized particles. Low to intermediate levels of contamination are removed from the soil to meet the DNA criterion for unrestricted use, which is based on EPA guidelines. The innovative process has achieved a 98-percent volume reduction of contaminated soil that would otherwise require special handling and packaging for offsite.

8-3. Decontamination of Solid Surfaces and Equipment

a. Absorption.

(1) Description. Various materials may be used to absorb liquid contaminants. This method is often used to contain spills. Contaminants can rapidly penetrate surfaces, and the absorbents act to contain the contaminants and prevent such penetration. Absorbents used may be attaclay, sand, anhydrous filler, sandy loam soil, and sawdust. If possible, a clay-based material should be

used. Absorbents are also used in the packaging of LLRW in order to meet the no free-standing water requirement for disposal.

(2) Advantages and disadvantages. Advantages and disadvantages of absorption are summarized in Table 8-3.

Table 8-3
Advantages and Disadvantages of Absorption

Advantages	Disadvantages
All needed equipment can be purchased from commercial manufacturers	Additional decontamination is normally required for surface residues and the subsurface
Act quickly	
Reach capacity in 1 to 2 hr	

(3) costs. The absorbent materials and application equipment are not expensive; disposal costs may be appreciable, however, because the absorbent material is considered LLRW and must be disposed of.

b. Demolition.

(1) Description. Demolition is the total destruction of a building, structure, or piece of equipment. Demolition usually occurs in conjunction with dismantling. Specific demolition techniques include complete burndown, controlled blasting, wrecking with balls or backhoe-mounted rams, rock splitting, sawing, drilling, and crushing. The debris may be treated (possibly by incineration) and is then disposed of. The building is usually pretreated for the majority of the radioactive material before demolition, and some structures within the building may have to be dismantled and removed before demolition.

(2) Advantages and disadvantages. Advantages and disadvantages of demolition are summarized in Table 8-4.

(3) costs. Cost for construction of replacement structures may be incurred. Operating costs for equipment are moderate to high. Costs for treatment and disposal of debris could be very high.

c. Dismantling.

(1) Description. Dismantling refers to the physical removal of selected structures or equipment from buildings or other areas. Unless decontaminated, dismantled parts cannot be reused. Dismantling requires the use of major tools such as saws and blades for segmenting and removing. Nonsparking tools may need to be used if a combustible or ignitable material is present. Very thick metal parts (up to 0.4 in. or 1 cm) can be dismantled using plasma arc cutting; highly active parts can be dismantled using water shield plasma cutting; and very hard and thick materials such as steel and concrete can be dismantled with water jet cutting. Once dismantling is complete, all removed materials are decontaminated or placed in suitable containers and marked for shipment to a suitable disposal site.

Table 8-4
Advantages and Disadvantages of Demolition

Advantages	Disadvantages
Technology is well-developed	Explosives and heavy machinery constitute hazards
Equipment is readily available	Personnel time could be extensive
Complete removal of contaminated materials from the site is expected	Accidental explosions may occur if combustible, explosive, or reactive residues are present
	Buildings, structures, and equipment are completely destroyed
	Large quantities of debris must be disposed
	Airborne contamination may occur through fugitive dust emissions
	Workers or nearby residents may be exposed

(2) Advantages and disadvantages. Advantages and disadvantages of dismantling are summarized in Table 8-5.

(3) costs. Treatment costs are moderate to high considering the magnitude of the operation. Equipment and personnel comprise the bulk of this cost. As in demolition, the cost of the disposal of the debris could be very expensive.

d. Encapsulation.

(1) Description. Contaminated structures and equipment can be physically separated from the environment by a barrier. These barriers may be plaster, epoxy

Table 8-5
Advantages and Disadvantages of Dismantling

Advantages	Disadvantages
Removes only contaminated materials	Large quantities of debris must be disposed of as LLRW if the water from water jet cutting is sufficiently contaminated and needs to be treated prior to disposal
Potentially applicable to all types of contaminants	Remote removal may be necessary
Equipment is available from commercial manufacturers	Toxic fumes are possible from welding, cutting, and burning
	Dismantled parts cannot be reused unless decontaminated

resins, or concrete. Any loose contaminants such as liquids or sludges should first be removed. Loose solid materials can be removed with shearing equipment. Encapsulant are, at best, a temporary control measure. Control effectiveness depends primarily on the correct choice of encapsulant. Encapsulant are evaluated according to adhesive/cohesive strength, ability to adhere to substract, impact resistance, and toxicity.

(2) Advantages and disadvantages. Advantages and disadvantages of encapsulation are summarized in Table 8-6.

Table 8-6
Advantages and Disadvantages of Encapsulation

Advantages	Disadvantages
Large volumes of debris are not created	Contaminated material may not be removed from the site
No structural materials must be removed, which decreases worker exposure	Structures and equipment that have been encapsulated are inoperable and may have to be replaced
Equipment is common construction equipment	

(3) costs. Encapsulation usually involves moderate costs compared to the other decontamination techniques. Personnel costs will be smaller than with demolition and dismantling. Disposal costs will depend on whether the material is kept onsite or is shipped to a disposal site.

e. Gritblasting.

(1) Description. Gritblasting is a surface removal technique in which an abrasive material is used for uniform removal of contaminated surface layers from structures or equipment. Gritblasting can only remove surface contamination. Steel pellets, sand, alumina, or glass beads may be used as the abrasive. This method is ineffective for depths greater than about 0.5 to 1.5 cm, and the comers may not be gritblasted as effectively as flat surfaces. The removed surface material and abrasive are collected and placed in appropriate containers for treatment and/or disposal. Gritblasting should not be used on highly toxic residues and sensitive explosives. Secondary treatment may be necessary to remove contaminants that have penetrated the building material beyond the surface layer. This method requires a gritblaster, air compressor, debris collection system, and dust-suppression system. The equipment components of a gritlasting system are shown in Figure 8-7. A variant on grit blasting is the use of dry ice pellets or rubber/plastic pellets. Dry ice does need treatment, and rubber/plastic pellets are easily separated for reuse.

(2) Advantages and disadvantages. Advantages and disadvantages of gritblasting are summarized in Table 8-7.

Table 8-7
Advantages and Disadvantages of Gritblasting

Advantages	Disadvantages
Widely used surface removal technique	Large amounts of dust and debris are generated
Large number of equipment manufacturers are available	A large quantity of abrasive is required
Remote control units available	Method is relatively slow
In most cases, minimal structural damages will result	Building or equipment is cleaned of residual dust by vacuuming and/or waterwashing; Dust inhalation creates a personnel hazard unless remote control units are used; Washing could produce a liquid waste that would require treatment prior to disposal

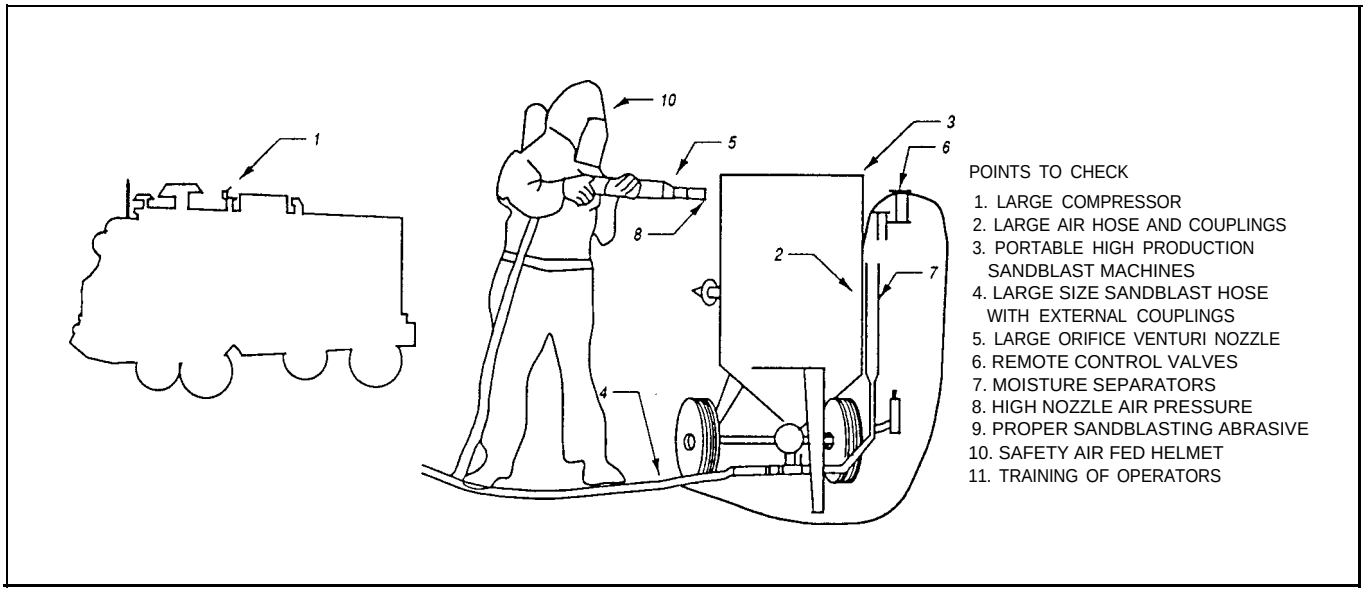

Figure 8-7. Equipment components of a gritblasting system (Source: Esposito et al. 1987)

(3) costs. Equipment and material costs are moderate compared to the other decontamination techniques. This method is labor-intensive unless remote control equipment is used. Remote control equipment is much more expensive than manually operated equipment. The disposal cost for the waste material also should be included in the economic analysis.

f. Hydroblasting/waterwashing.

(1) Description. Hydroblasting uses a high-pressure (3,500- to 350,000-kPa) water jet to remove contaminated debris from surfaces. The debris and water are collected, and the water is decontaminated. Hydroblasting may not effectively remove contaminants that have penetrated the surface layer. On the average, this technique removes 0.5 to 1.0 cm of concrete surface at the rate of 35 m^2/hr. The method can be used on contaminated concrete, brick, metal, and other materials. Hydroblasting can very easily incorporate variations such as hot or cold water, abrasives, solvents, surfactants, and varied pressures. A schematic diagram of a hydroblasting process is shown in Figure 8-8.

(2) Advantages and disadvantages. Advantages and disadvantages of hydroblasting are summarized in Table 8-8.

(3) costs. Repair costs of the treated surfaces should be low to moderate. Fuel and equipment costs should be moderate, and personnel costs will be high unless a remote system is used. In that case, personnel costs will be low but equipment costs will be high.

Table 8-8
Advantages and Disadvantages of Hydroblasting

Advantages	Disadvantages
Uses off-the-shelf equipment	Not applicable to wood or fiberboard
Surfactants, caustics, or commercial cleaners can be added to decrease surface tension and effectiveness	Large amounts of contaminated liquid will be generated, which will require treatment
Remotely operated rigs can be used on walls and floors	May not effectively remove subsurface contaminants
Solvents such as acetone can be used with water or in place of water to solubilize contaminants	
Sand or other abrasives can be used to increase surface removal effectiveness	

g. *Painting/coating.*

(1) Description. Three separate processes fall under this general heading: (a) paint removal, (b) fixative/stabilizer coatings, and (c) strippable coatings. Paint removal might be needed in a building found to contain radiation contamination where the radioactive material is

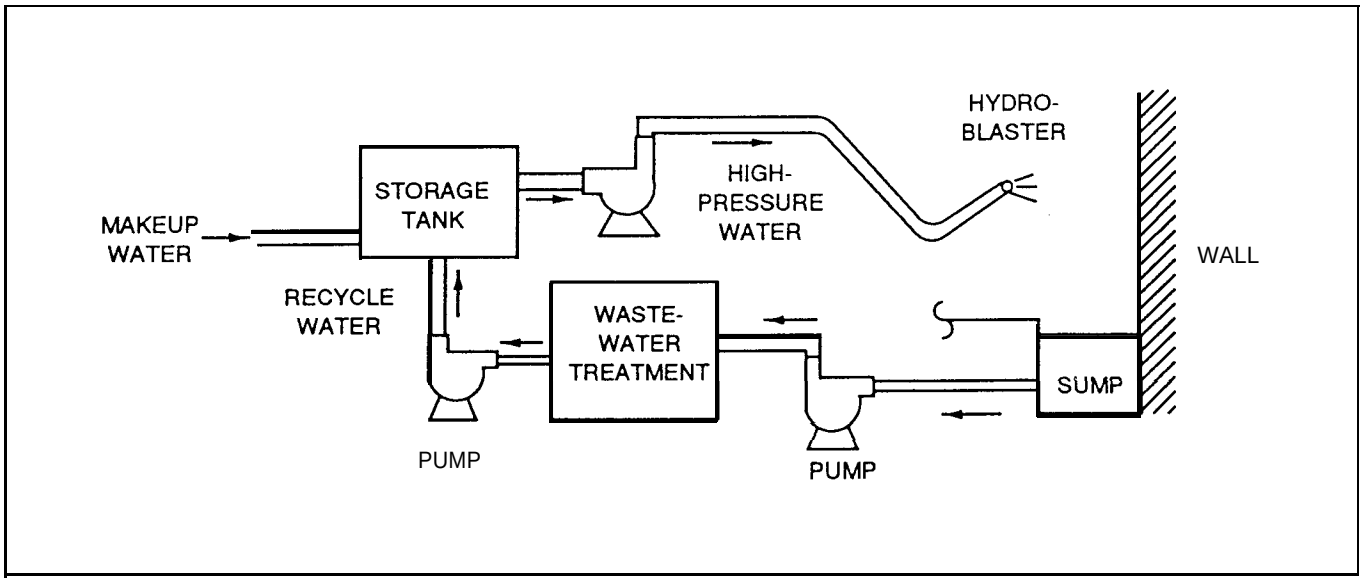

Figure 8-8. Schematic diagram of the hydroblasting process (Source: Esposito et al. 1987)

on the wall surface or trapped between layers of paint. A combination of commercial paint removers, handscraping, waterwashing, and detergent scrubbing is used to remove the paint. Fixative/stabilizer coatings can be used on contaminated residues to fix or stabilize the contaminant in place and decrease or eliminate exposure hazards. These agents include molten and solid waxes, carbowaxes, organic dyes, epoxy paint films, gels, foams, and polyester resins. To create strippable coatings, compounds that bind with contaminants are mixed with a polymer, applied to a contaminated surface, and removed to achieve decontamination.

(2) Advantages and disadvantages. Advantages and disadvantages of painting/coating are summarized in Table 8-9.

(3) costs. For paint removal, treatment, labor, and disposal costs should be moderate. Major costs will be incurred for resurfacing, if needed. When fixative coatings are used, treatment and labor costs will be somewhat lower than the other techniques, and disposal costs will be minimal. Strippable coatings must be applied and removed so the treatment and labor costs are greater. Equipment is available at low cost.

h. Scarification.

(1) Description. Scarification is capable of removing up to 2.5 cm of surface layer from concrete or similar materials. It is applicable only to concrete (not concrete block) and cement. The scarifier tool consists of pneumatically operated piston heads that strike the surface, causing concrete to chip off. The piston heads consist of mulTipoint tungsten carbide bits. An almost identical process to scarifying is scabbling, in which a suer-high-pressure water system can be used. This water system is

Table 8-9
Advantages and Disadvantages of Painting/Coating

Advantages	Disadvantages
Requires little equipment	Labor-intensive operation
Well-developed technique	Worker exposure potential is high
Very little hazardous waste is generated by fixatives	Paint removal usually takes longer than painting
Coatings are applicable to all building materials	Fixative coatings must be monitored over their lifetime
Fixative coatings reduce the level of contamination to which building occupants are exposed	Hard to achieve the intimate contact between fixative and contaminant needed on a rough surface
Stripped coating physically holds or traps the contaminant for easier handling and disposal	Strippable coatings may bind to the surface as well as the contaminant, which may result in large volumes of waste and structural damage
Different polymer formulations may be required for various building materials	Paint removal may be needed prior to application of strippable coating

more easily operated remotely. Wall, floor, and hand-held scarifies are available. The tungsten-carbide bits have an average working life of 80 hr under normal conditions. Actual experiences have shown that a seven-piston floor scarifier can remove approximately 30 m^2 of surface material per hour and a three-piston wall scarifier can remove 7 to 10 m^2 per hour. The units may be modified to include a HEPA-filtered vacuum exhaust system to capture contaminated dust. Remotely operated scarifier rigs can be used.

(2) Advantages and disadvantages. Advantages and disadvantages of scarification are summarized in Table 8-10.

Table 8-10
Advantages and Disadvantages of Scarification

Advantages	Disadvantages
Potentially applicable to all contaminants except highly toxic residues or highly sensitive explosives	Substantial amounts of contaminated debris (water, concrete, and dust) are generated
Achieves a deeper penetration than most other surface removal techniques	The treated surface retains a rough appearance that requires resurfacing
	An explosion potential exists if pockets of combustible material are encountered
	Not suitable for hard-to-reach areas or for metal, wood, etc.
	Personnel hazards may result from high noise levels, contaminant-laden dust, and flying chips

(3) costs. Repair costs for the surface should be moderate. Equipment costs are moderate to high, but fuel costs should be low. Manpower costs will probably be high because the removal rate is quite slow. Disposal costs will be moderate to high.

i. Solvent washing.

(1) Description. In solvent washing, an organic solvent is circulated across the surface of a building to make contaminants soluble. A diagram of the solvent is presented in Figure 8-9. If no degradation of the solvent occurs, the spent solvent can be either thermally or chemically treated to remove the contaminants. This method has potential applications to a wide range of contaminants and building materials. The primary difficulty is to achieve an inward flux of solvent into porous building materials followed by an outward flux of solvent contaminated with residues.

(2) Advantages and disadvantages. Advantages and disadvantages of solvent washing are summarized in Table 8-11.

(3) costs. Equipment and material costs will be moderate to high. Manpower costs could possibly be extensive. Disposal costs will be moderate to high.

j. Steam cleaning.

(1) Description. Steam cleaning physically extracts contaminants from building materials and equipment surfaces. Currently, steam cleaning is used mainly to remove contaminated particulate. This technique is known to be effective only for surface decontamination. Steam cleaning requires steam generators, spray systems, collection sumps, and waste treatment systems. Commercial-scale steam cleaners are available from many manufacturers. Several manufacturers make portable steam cleaning equipment.

(2) Advantages and disadvantages. Advantages and disadvantages of steam cleaning are summarized in Table 8-12.

(3) Costs. Steam cleaners are generally moderately priced. Manpower and waste disposal costs will be high.

k. Drilling and spalling.

(1) Description. Drilling and spalling consists of drilling holes which are 2.5 to 4 cm in diameter and 7.5 cm deep into concrete. The spalling tool bit is inserted into the hole and hydraulically spreads to span off the contaminated concrete. This technique can remove up to 5 cm of surface from concrete or similar materials. Vacuum filter systems and water sprayers can be used to control dust during drilling and spalling operations. Remotely operated drill and span rigs are available. A sketch of a concrete spaller is given in Figure 8-10. Battelle Pacific Northwest reports that its drilling and spalling rig has an average removal rate of 6 m^3/hr for standard concrete.

(2) Advantages and disadvantages. Advantages and disadvantages of drilling and spalling are summarized in Table 8-13.

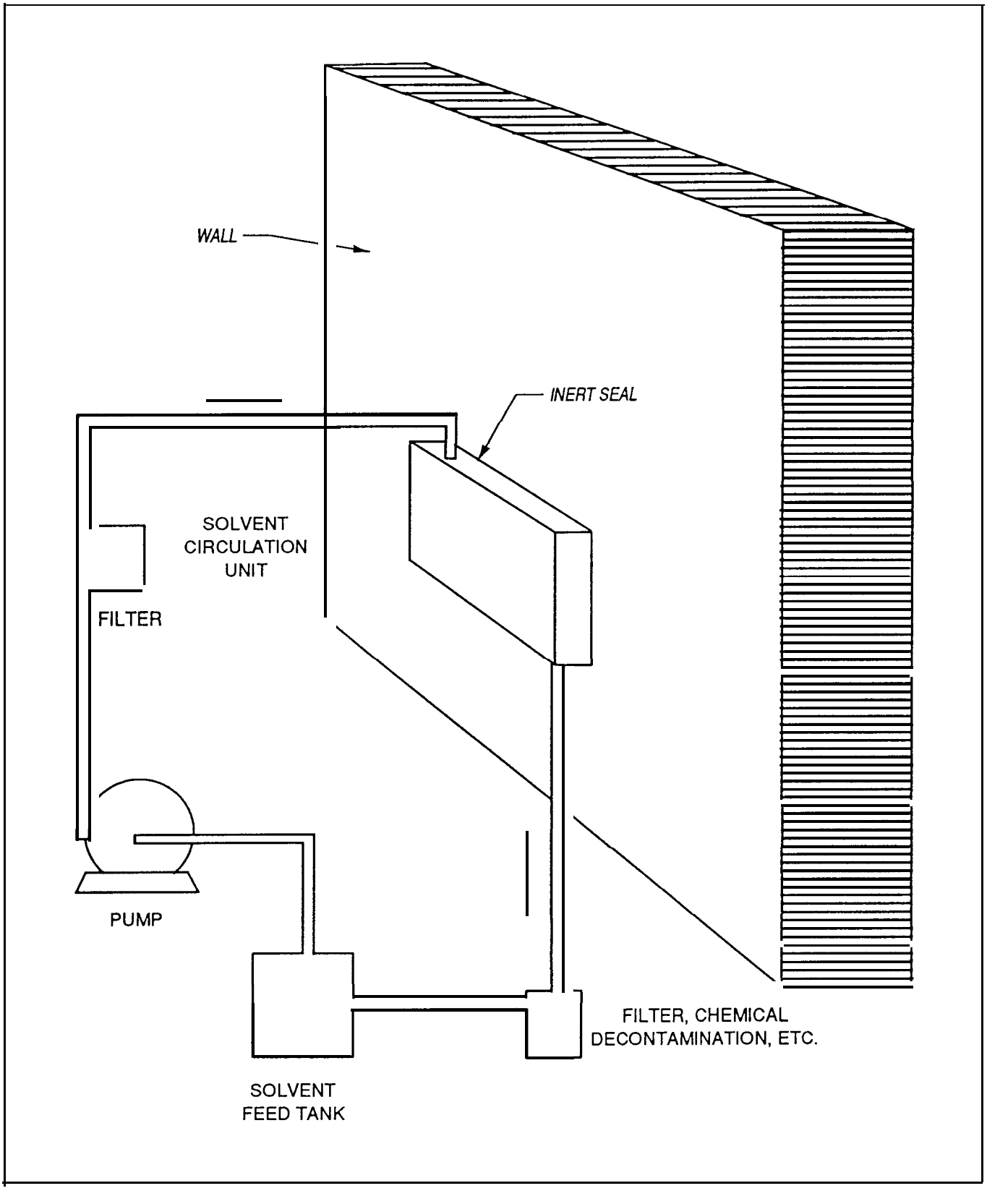

Figure 8-9. Schematic diagram of the solvent circulation apparatus (Source: Esposito et al. 1987)

Table 8-11
Advantages and Disadvantages of Solvent Washing

Advantages	Disadvantages
Depending on the solvent-contaminant match, this can be a very efficient removal system	Penetration of the solvent into the material matrix, followed by outward diffusion, may require a long time
Removal of contaminated paint is possible if the proper solvent is used	It may be extremely difficult to get a tight seal around the solvent circulation apparatus and surface
	Not suitable for intricate structures
	Probably will require extensive set-up time
	Residual solvent may require removal; solvent may be hazardous waste

Table 8-12
Advantages and Disadvantages of Steam Cleaning

Advantages	Disadvantages
Relatively inexpensive and simple technique	Labor-intensive process that is costly if automated
Depending on the contaminant, thermal decomposition and/or hydrolysis may occur	Large volumes of contaminated water are generated (although these are generally less than in hydroblasting)
	Personnel hazards include the potential for steam burns and toxicity from solvent/steam mixtures

(3) Costs. Costs for resurfacing are expected to be moderate. Equipment, manpower, and disposal costs will be high in comparison to the other decontamination methods.

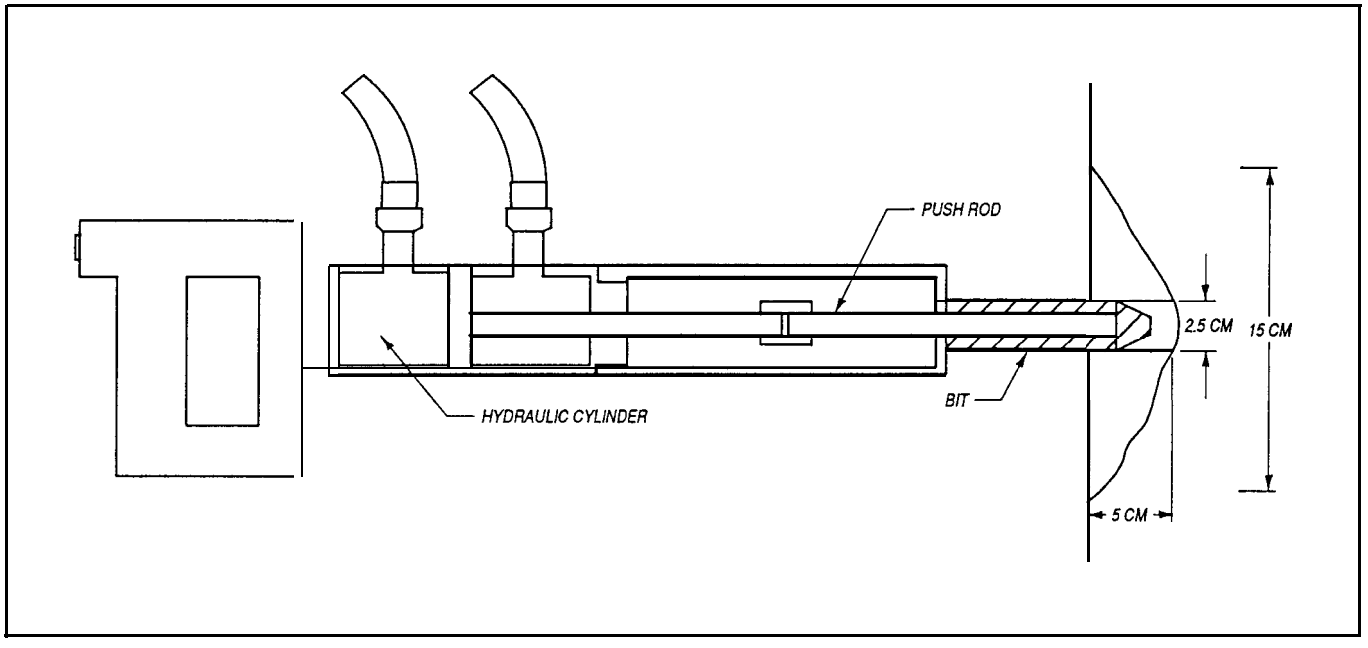

Figure 8-10. Concrete spaller (Source: Esposito et al. 1987)

1. Foam and gel decontamination.

(1) Description. Foam and gel applicators produce solutions that adhere to the surfaces being decontaminated and provide a means to clean surfaces where soaking action is required. The foam is produced by a pressurized applicator, it adheres to the surface, and the surface is decontaminated through contact and chemical removal. The gel works on the same principles as the foam, except the gel can adhere to the surface for a longer period of time. This will increase the decontaminability due to a longer soaking time. Nitric acid has been used at the Savannah River site as the decontamination agent.

Table 8-13
Advantages and Disadvantages of Drilling/Spalling

Advantages	Disadvantages
Achieves deeper penetration of surfaces than other surface removal techniques	Substantial amounts of contaminated debris are generated
Works well for large-scale applications	High dust and noise levels pose personnel hazards
	No combustible residues can be present
	Applicable to concrete only (not to concrete blocks) and will have to be modified or another technique chosen to treat other building materials
	Personnel time is extensive because this is a relatively slow process and large quantities of concrete will have to be collected.
	Spalled surface is very rough and may require concrete capping or some other treatment to yield smooth surfaces

(2) Advantages and disadvantages. Advantages and disadvantages of foam decontamination are summarized in Table 8-14.

(3) Costs. Cost information was not available.

m. Kelly machine.

(1) Description. This system sprays superheated water on a surface and vacuums the spent liquid into a reservoir. The use of superheated water is expected to increase the decontamination factor achieved. A Kelly decon machine is used in a teleoperated system at the Savannah River site.

(2) Advantages and disadvantages. Advantages and disadvantages of the Kelly machine are summarized in Table 8-15.

(3) Costs. Cost estimates were unavailable.

8-4. Solid-Liquid Separation

a. Suspended solids.

(1) Evaporation.

Table 8-14
Advantages and Disadvantages of Foam Decontamination

Advantages	Disadvantages
Decontaminated surface is not damaged in this process	Useful only for smearable contamination
The operator can easily see the surfaces being treated, and the foam can be applied remotely	The foaming agent and decontamination agent must be compatible and mixed in the correct order and amounts
Foam and gel are easy to apply	
Only a small amount of waste products are generated	
Portable equipment can be obtained if needed	

Table 8-15
Advantages and Disadvantages of the Kelly Machine

Advantages	Disadvantages
Commercially available and has been proven effective	Large volume of contaminated water will be generated
Can be modified to be used remotely	The use of superheated water poses a personnel hazard
	Only useful for smearable contamination

(a) Evaporation is considered a volume reduction method as well as a separation method. Considering that evaporator technologies are controlled by physical and chemical characteristics of the waste streams and not by their radioactivity, almost any type of evaporation technology can be applied to LLRW consistent with keeping radiation exposures as low as reasonably achievable. Evaporation concentrates liquid effluent by using heat to drive off waste components in the order of their volatilization temperatures. Water usually has one of the lower volatilization temperatures. The basis for evaporation is simply the separation of volatile from nonvolatile material.

(b) A generalized flow diagram is presented in Figure 8-11. The system works as follows (the numbers in parentheses correspond to flows in the figure): the feed consists of water contaminated with low concentrations of

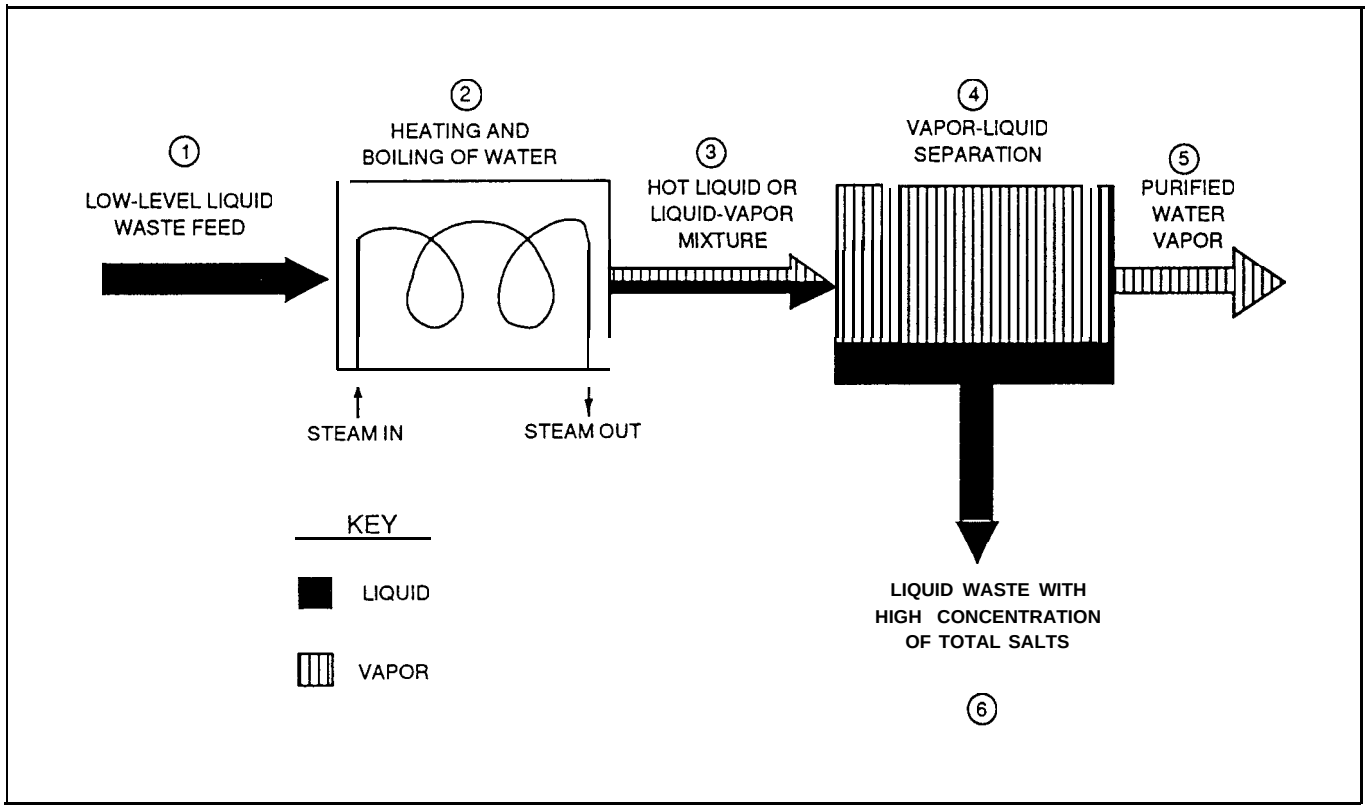

Figure 8-11. Simplified evaporation process (Copyright © 1991. Electric Power Research Institute. EPRI NP-7386-V1. *Radwaste Desk Reference, Volume 1: Dry Active Waste.* Reprinted with permission.)

radioactive material; the feed is heated with steam in a heat exchanger, boiling off some of the water; this produces a mixture of hot liquid and evaporated water vapor; the vapor and liquid are separated into two streams: relatively pure water vapor, and a liquid solution highly concentrated with nonvolatile radioactive material. The highly concentrated liquid is only a fraction of the volume of the feed solution, greatly reducing the quantity of material requiring special radioactive waste disposal techniques. Energy from the purified water vapor may be reused to provide steam for the heating and boiling step. Heat transfer is the most important aspect of evaporator design. In general, the heater is designed so that LLRW feed is delivered to the inside of the tubes with steam contacting the outside of the tube surface.

(c) Natural circulation evaporators have long vertical heat exchanger tubes so that the contaminated liquid flows upward through the tubes (rising film) or the liquid flows downward (falling film) through the tubes. Although operating costs are relatively low with natural circulation evaporators, they have been replaced by more effective forced-circulation evaporators.

(d) In a rising-film evaporator, the waste feed is delivered to the bottom of the heater. Liquid on the inside of the heater tubes is brought to a boil by steam. Natural circulation occurs because the rising vapor helps move the liquid upward. As the fluid moves up the tube, more vapor is formed, causing a thin film of liquid to form along the tube surface. This improves the heat transfer and allows more water to boil off.

(e) With falling film evaporators, the waste feed is delivered to the top of the heater and the liquid flows downward due to gravity. The heat transfer performance of this configuration is improved because a thinner, faster moving film is produced. Falling film heaters are smaller than rising film heaters. The falling film evaporator has a pump to circulate the liquid to the top of the unit. It is not used for forced circulation. The chief problem with the falling film evaporator is the difficulty of attaining uniform liquid distribution at the top of the tubes.

(f) The most common type of forced-circulation evaporator is the evaporator crystallizer. The process is

similar to the rising-film evaporator, except that a larger recirculation pump is used to enhance circulation, and the heater does not boil the liquid. In this process, liquid waste feed is mixed with a relatively large portion of concentrated liquid waste and fed at a high rate through the heater. The liquid is heated less than 10 “F by the heater. As the liquid enters the vapor body, where the pressure is slightly less than in the heater tubes, some of the liquid evaporates. The vapor enters an entrainment separator and then a condenser. The majority of the concentrated liquid waste coming out of the vapor body is recirculated. This allows the circulating liquid to be a suspension of dissolved salts and undissolved salt crystals. The equipment is designed to handle circulating solids. This process is illustrated in Figure 8-12. The major advantage to this type of system is that greater waste volume reduction can be achieved. However, operating costs are high, because of extensive pumping requirements.

(g) Wiped-film evaporators (sometimes called agitated-film, thin-film, or scraped-film evaporators) use a hot fluid inside a tube to heat the LLRW and evaporate water. Liquid waste is spread on the outside of the tube by a rotating assembly of blades, creating an easily evaporated thin film.

(h) It is often economical to use the steam produced in the evaporator to provide the energy to evaporate water from the liquid waste feed. This process is termed vapor recompression. The low-grade steam coming out of the entrained liquid separator is delivered to a compressor. The compressor increases the pressure and temperature of this steam. This steam is supplemented by a small amount of makeup steam and then sent to the heater. Vapor recompression can result in energy savings of over 80 percent.

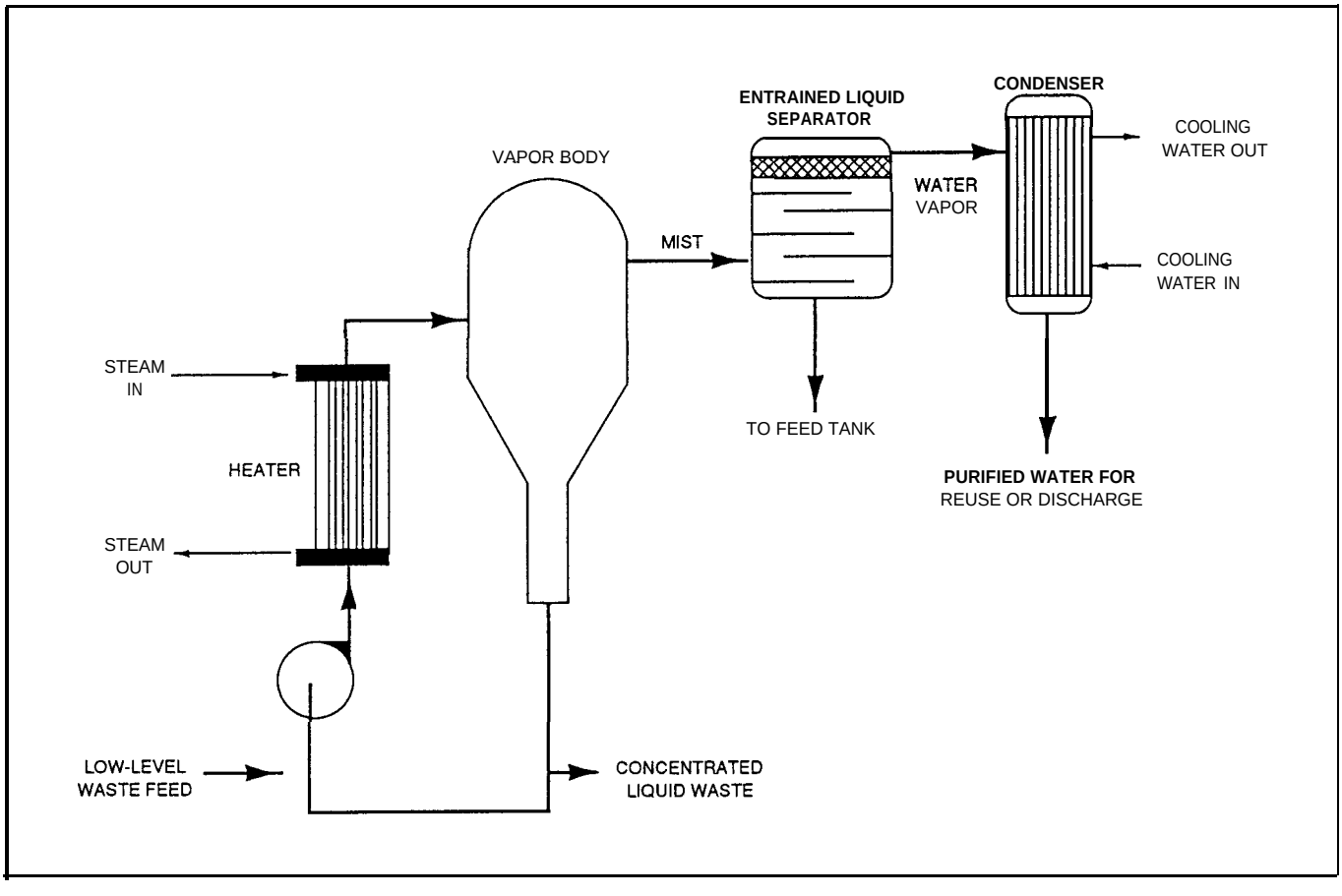

Figure 8-12. Forced-circulation evaporator (Copyright © 1991. EPRI NP-7386-V1. *Radwaste Desk Reference, Volume 1: Dry Active Waste.* Reprintad with permission.]

(i) Multiple-effect evaporators provide another means of increasing energy utilization. This evaporator system uses the vapor from one evaporator as the heating source for the next (more concentrated liquid) evaporator in the system. In this way, the steam is used a number of times, reducing the system energy costs. Vapor recompression between evaporators is not required since successive evaporators are normally operated at lower absolute pressures. This evaporator type is normally used only for large-scale applications.

(j) Table 8-16 outlines the advantages and disadvantages of each evaporator type. A main advantage of evaporation is that the process usually produces residues with a water content of 1 to 5 percent. The main constraints encountered in evaporation processes relate to corrosion phenomena, to scaling and formation of incrustation, to the presence of interfering compounds such as certain unstable nitrates, organics, foaming agents, and, not the least, to the problem of generation and removal of dust. Anti-foam agents added to foaming evaporators

Table 8-16
Advantages and Disadvantages of Evaporator Types Used in Light-Water Reactor Power Plants

	Evaporator Type		
	Natural Circulation	Forced Circulation	Forced Circulation with Vapor Recompression
Advantages	• Low-cost • Large heating surface • Low holdup time • Small floor space • Good heat-transfer coefficients at reasonable temperature differences (rising film) • Good heat-transfer coefficients at all temperature differences (falling film)	ž High heat-transfer coefficients • Positive circulation • Relative freedom from salting, scaling, and fouling	In addition to those for forced circulation: • Cooling water requirements are eliminated • Steam heating requirements are reduced
Disadvantages	• High head room • Generally unsuitable for salting and severely scaling liquids • Poor heating transfer coefficients of rising-film version at low temperature differences • Recirculation usually required for falling-film version	• High cost • Power required for circulating pump • Relatively high holdup or residence' time	• High cost • Electrical consumption high due to large compressor motor • Relative high holdup or residence time
Best Applications	• Clear liquids • Foaming liquids • Corrosive solutions • Large evaporation loads • High temperature differences-falling film • Low temperature operation-falling film	• Crystalline product • Corrosive solutions • Viscous solutions	• Crystalline product • Corrosive solutions
Frequent Difficulties	• Sensitivity of rising-film units to changes in operating conditions • Poor feed distribution of falling-film units	• Plugging of tube inlets by salt deposits detached from walls of equipment • Corrosion-erosion problems resulting from improper feed pH adjustment	• Same as normal forced-circulation evaporators

Copyright © 1991. Electric Power Research Institute. EPRI NP-7386-V1. *Radwaste Desk Reference, Volume 1: Dry Active Waste.* Reprinted with permission.

frequently overcome the problems caused by foaming agents such as detergents.

(k) Just as evaporators can be used to reduce large volumes of liquid LLRW, they can also be used to reduce volumes of dilute liquid mixed waste. Evaporation may also be useful as a separation technique, provided the hazardous components are evaporated, collected, and then treated. An evaporator may be considered by the EPA or a delegated state program as a treatment facility requiring an RCRA Part B permit if the liquid undergoing treatment is considered to be "solid waste. "

(1) A properly designed shielding and containment system around the evaporation equipment provides for control of radioactive emissions and protection of employees at the facility. ALARA requirements are important, since evaporation actually concentrates the radioactivity.

(2) Centrifugation.

(a) Centrifuges are used to achieve partial dewatering of solid-liquid suspensions like sludges, obtained by filtration or chemical flocculation of liquid effluents, as well as spent ion-exchange resins. The principle of operation is a liquid-solid separation by centrifugal forces.

(b) Centrifuges are used both for continuous and batchwise operations in nuclear power stations and in nuclear research centers that use chemical flocculation processes. In the latter case, freeze-thawing or gravity thickening is used to overcome the problems related to the colloidal structure of the sludges. The system's applicability is limited to large particles unless additional filtering layers or polyelectrolytes are used.

(c) Typical process data indicated throughputs of 1 to 5 m^3 feed slurry per hour, with feed solids content from 0.01 to 1 percent by weight (t %). The dewatering performance largely depends on the solids characteristics, and the residual water in the solids varies between 5 (granular) and 90 wt % (colloidal sludges). Horizontal and vertical centrifuges are being used at 4,000 to 6,000 rpm.

(3) Filtration.

(a) Filtration is applicable to chemical sludges, obtained from flocculation and co-precipitation of liquid effluents, as well as to suspensions originating from backwash cleaning of larger filter units. The process aims at volume reduction, by dewatering before any further treatment or immobilization, and is based on the separation of solids on a porous material through which the liquid phase passes. Two main filtration techniques are applied - vacuum filtration and pressure filtration.

(b) Vacuum filtration is the most common type of filtration. Continuous units are commercially available and are based on horizontally rotating cylinders with filter cloth or porous metal, on which the filter cake is accumulated during the slow rotation. The filter cake is scraped off at the end of each rotation. The capacity is limited by the filtration characteristics of the sludge, and the equipment size is large compared with pressure filtration units. Because of its design and principle of operation, vacuum filtration is compatible with radiological safety requirements and allows for treating low-level as well as intermediate-level sludges, with low exposure to personnel and low potential for the spread of contamination. Dewatering up to 20- to 40-wt % solids can be obtained for wastes with initial 1- to 10-wt % solids content.

(c) Pressure filtration offers the advantage of increased filtration rate and compact equipment, but it has the disadvantage of the risk of leakages, because it operates under pressure. Pressure filtration units can consist of filter cartridges or horizontal and vertical multilayer plate configurations. Semi-continuous operation is obtained in the vertical one by centrifugal cleaning of the discs. In general, pressure filtration has the disadvantage that, in the case of poor filterability of the sludges, precoat filter aids, such as cement or diatomaceous earth, have to be used, which results in an increase in the final waste volume.

(d) A good example of a filtration system for heavy metals and radionuclides is the filter method developed by Filter Flow Technology, Inc. This colloidal filter method removes inorganic heavy metals and non-tritium radionuclides from industrial wastewater and groundwater. The filter unit has an inorganic, insoluble filter bed material contained in a dynamic, flow-through configuration resembling a filter plate. A three-step process is used to achieve heavy metal and radionuclide removal. First, water is treated chemically to optimize formation of colloids and colloidal aggregates. Second, a prefilter removes the larger particles and solids. Third, a filter bed removes the contaminants to the compliance standard desired. The process is designed for either batch or continuous flow applications at fixed installations or field mobile operations. The field unit can be retrofitted to existing primary solids water treatment systems or used

as a polishing filter for new installations or onsite remediation applications.

(4) Freeze-thawing.

(a) A possible pretreatment step for colloidal sludges prior to centrifuging or filtration is the freeze-thawing process. The colloidal suspensions are first completely frozen (-15 "C to -20 "C) and, after thawing, show improved settling characteristics. The physical process occurring is tri-dimensional cracking of the colloidal network into a more granular structure. Drawbacks of this process are the energy balance, corrosion problems, and the discontinuous small scale of operation.

(b) The process is applied to sludges with relatively low specific activity (0.1-5 μCi/g dry solid). Direct dewatering of 12 wt % of solids content has been obtained, starting with sludges concentrated by gravity to 6 wt % solids.

(5) Membrane processes.

(a) Various types of membranes exist that are able to filter different size molecules. Reverse osmosis (RO) and ultrafiltration can be used as LLRW treatment processes. In membrane processes, contaminants are separated from a solvent (water) by the movement of the solvent through a semipermeable membrane. The contaminants are filtered out by the membrane.

(b) Reverse osmosis removes contaminants from aqueous wastes by passing the waste stream, at high pressure, through a semipermeable membrane. At sufficiently high pressure, usually in the range of 1,378 to 2,756 Pa (200 to 400 psi), pure water passes out through the membrane, leaving a more concentrated waste stream. The semipermeable membrane itself is the most critical part of the RO process. Membranes are manufactured from a variety of materials such as cellulose acetate, cellulose diacetate, cellulose triacetate, polyamide, other aromatic polyamides, polyetheramides, polyetheramines, and polyuetherurea. Cellulose acetate and cellulose triacetate membranes can be prepared in sheet form with water fluxes of 4.1×10^{-2} to 8.2×10^{-2} $m^3/day/m^2$ at 2,756 kPa (400 psi). Polyamide and thin-film composite membranes are subject to degradation if exposed to chlorine or other oxidants. RO membranes can be spiral wound, hollow fine fiber, tubular, or flat. The configuration depends upon the volume of water needing treatment. One of the major difficulties with RO membranes is their susceptibility to fouling. It is common practice to pretreat the water to remove oxidizing materials, iron, and magnesium salts, particulate, and oils, greases, and other film formers. The pH and temperature of the feed water may also need to be adjusted. RO membranes can filter particles in the O .001 -micron to 0 .05-micron size range.

(c) Ultrafiltration (UF) is similar to reverse osmosis in that both processes involve the transport of a solution under a pressure gradient through a semipermeable membrane to achieve separation of solvent molecules from solute molecules. Ultrafiltration is not impeded by osmotic pressure and can be performed at low pressure differences of 34.5 to 689 kPa (5 to 100 psi). Ultrafiltration is applicable to solutes with molecular weights between 500 and 500,000. Above this molecular weight size, separation occurs by conventional filtration. UF membranes are commercially available in cellulose acetate, polysulfone, acrylic, polycarbonate, polyvinyl chloride, polyamides, polyvinylidene fluoride, copolymers of acrylonitrile and vinyl chloride, polyacetal, poly - acrylates, polyelectrolyte complexes, and cross-linked polyvinyl alcohol. Membrane configurations are available in tubular, plate-and-frame, spiral-wound, and hollow-fine-fiber designs. Temperature has an increased effect in ultrafiltration operation. Fluxes through the membrane tend to double with a 15 °C to 25 °C rise in temperature. Operating temperatures are limited by economics and the membrane material. Membranes produced from cellulose are limited to the 50 °C to 60 °C range, while other membranes may be operated at temperatures as high as 100 °C. Ultrafiltration membranes do not require pretreatment as extensive as RO membranes. In fact, ultrafiltration can be used as a pretreatment for RO. Ultrafiltration affects particles in the 0.003-micron to 1-micron size range. France has developed a process for treating laundry liquid wastes with low-level contamination by cobalt, cesium, and silver by mineral ultrafiltration membranes.

(d) Membrane processes are very effective separation processes. They are well-suited to small flows and small installations. Recent membrane advances have reduced the capital, operation, and maintenance costs required, but these costs are still significant when compared to more conventional water treatment techniques. The maintenance problems related to membrane fouling and the pretreatment requirements are definite disadvantages that should be considered when comparing membrane processes to other treatment processes.

b. Dissolved solids. Treatment processes for dissolved solids such as precipitation, carbon adsorption, alumina adsorption, and ion exchange are discussed in

Chapter 12 for the treatment of mixed wastes. These techniques are well-developed, with extensive literature bases.

8-5. Immobilization

a. Cement.

(1) Introduction. Cement, which has a basic composition of calcium, silicon, aluminum, and iron oxides, is commonly used as a matrix material for the solidification and immobilization of radioactive and hazardous wastes. The major benefit from any of these processes is the binding together of the particles to avoid dispersion and to reduce the surface area exposed to air or water transport. Structural stability is convenient for placement and maintaining the integrity of the system.

(2) Composition. Hydraulic cement can be defined as the general class of cementations materials that require addition of water and solidify as a result of various hydration reactions. When cement and water are mixed together, a series of chemical reactions begin that result in stiffening, hardening, evolution of heat, and, finally, development of long-term strength. The most significant is the hydration of calcium silicates, which constitute about 75 percent of the weight of cement, to form calcium hydroxide and cement gel. Hydrated cement contains about 25 percent calcium hydroxide and 50 percent cement gel by weight. The strength and other properties of hydrated cement are due primarily to cement gel. It acts as the principal binder and hardener in the portland cement/water system. There are five types of portland cement with well-defined properties designated Types I to V. Type I cement is a general-purpose cement. Type II cement is a slow-setting, sulphate-resistant cement and produces only a moderate amount of heat during setting. Type III cement is fast-setting, with high compressive strength, but generates significant heat during setting. Type IV is a slow-setting cement with low heat generation. Type V cement is highly resistant to sulfate and is generally used in marine environments. The choice of cement is highly dependent upon the waste being processed. Most vendors consider their formulations to be proprietary.

(3) Pozzolan. Mixtures of hydraulic cement with fly ash, pumice, lime kiln dusts, or blast furnace slag are normally called “pozzolan” mixtures. By adding the pozzolan to the cement, the strength and durability of the immobilizing matrix can be improved. However, pozzolanic reactions are generally much slower than cement reactions.

(4) Grout and concrete. Cement mixed with sand and water is called “grout. ” Grout is used in situations where it must fill small voids. Cement mixed with water, sand, and gravel is called “concrete.”

(5) Water-to-cement ratio. A minimum water-to-cement ratio is approximately 0.40 by weight for portland cement but depends on the waste itself, since some waste solids absorb large amounts of water. The addition of too much water may result in a layer of free-standing water on the surface of the solidified product as well as a reduction in strength and an increase in the permeability of the final waste form, which is a grout-waste solid matrix.

(6) Additives. Additives can be used to improve the waste/grout compatibility or to reduce the water/cement ratio.

(a) Common additives. Common additives include sodium-silicates, zeolites, clays, and formaldehyde. The sodium-silicates, zeolites, and clays provide improved settings for different waste materials, while the formaldehyde prevents bacterial growth which can cause internal build-up of gas pressure.

(b) SuperPlasticizers. The addition of superplasticizers (water-reducing admixtures) would allow for lower water/cement ratios. These admixtures are surfactants that act by adsorbing to the surface of the cement particles so that the surface of the cement particle becomes hydrophilic, and it is no longer attracted to other cement particles. A better-dispersed suspension of the cement paste means that a lower water/cement ratio can be used to lower permeability without a change in consistency, and a higher waste loading can be achieved. A 25- to 30-percent water reduction is possible with superplasticizers, decreasing the porosity and increasing the strength of the final product.

(c) Silica fume. Another admixture that tends to increase the durability and decrease the porosity of cement is silica fume, or microsilica. The microsilica particles are much smaller (diameter ratio is approximately 1/100) than the cement particles, allowing them to physically fill the void spaces between the cement particles. The microsilica also changes the hydration reaction in the cement so that more cement gel is formed. The additional gel improves bonding within the cement-waste matrix and helps reduce permeability. The addition of microsilica requires additional water or water-reducing admixtures to allow for adequate dispersion.

(d) Polymer mixtures. Portland cement is preferred for use in these mixtures because it is a common, inexpensive construction material. Typical construction concrete mixtures are often used to immobilize solid material. However, heavy materials such as barite and hematite are added in some instances to increase shielding effectiveness. Concrete impregnated with polymers can improve the properties of the grout-waste form considerably. The polymers decrease the rate of leaching and shrinkage and improve the strength, durability, and chemical resistance of the waste form. A disadvantage to using polymers is that the waste mixture might need to be heated, which increases the capital, operating, and maintenance costs of the system. (Polymers are discussed further in Section 8-5. *c.*)

(7) Inorganic cements. Delaware custom material (DCM) and Envirostone are patented inorganic cements. DCM is a sodium silicate solution incorporating a setting agent, usually portland cement. Envirostone is a polymer-modified, gypsum-based cement that has been ground to a fine powder. It has a different chemistry than portland cement and can incorporate waste such as berates that can cause failure of cementitious systems. In an aqueous waste, the use of Envirostone results in a uniform cast containing no free liquid. Envirostone works best on neutral to acidic wastes. Envirostone is relatively expensive ($0. 678/lb) as compared to portland cement ($0.06/lb).

(8) Cement glass. Cement glass can also be used for solidification. The water-to-cement glass ratio is approximately 0.3, with a very low viscosity. Thus, it must be contained in a high-integrity container (HIC). The sodium and phosphorus silicate for the cement glass is obtained from clay, so it is very low in cost. The cement glass has inorganic polymer characteristics with the fine structure and intense strength of glass. The matrix is inert to the waste, so no chemical reaction occurs. Also, no shrinkage or bleeding of water occurs with the cement glass. This solidification system was tested in an actual size pilot plant handling 200-lb drums, where it remained voidless up to 90 “C. This matrix showed high adsorption capabilities for strontium and cesium. The cement glass waste form exhibited weight changes of 0.3 percent and size changes of 0.1 percent during a freeze/thaw test, and the elasticity coefficient satisfies American Society for Testing and Materials (ASTM) standards.

(9) Equipment. Since the cementation process is for nuclear waste immobilization and reduction of permeability, the equipment to be used is a major consideration because it will become contaminated in the treatment process. If the waste is not solid, but is soil, sludge, or liquid, the mixing of the waste and cement is very important to the effectiveness of the final waste form. This mixing can be accomplished in several ways, but optimizing the use of equipment should be considered in choosing the mixing method. In the design of the process, the engineer should pay careful attention to the choice of scales and meters. Reagants and additives should be properly stored, or they will lose their useful qualities.

(10) In-drum mixing. The waste can be mixed in-drum (as shown in Figure 8-13) by inserting a mixer blade into the drum or by physically tumbling the sealed drum. In-drum mixing is advantageous because there are fewer equipment parts that become contaminated and the system is very easy to maintain. The disadvantages are that the cement and waste must be mixed drum by drum and care must be taken to blend the mixture well enough to ensure a proper final waste form, or grout-waste mixture.

(11) In-line mixing. The waste can also be mixed in-line (as shown in Figure 8-14) by feeding the waste and grout into a mixer, and then feeding the mixture or blend from the mixer into the drum. In-line mixers have the advantages of ease of cleaning, higher throughput, and the capacity to prepare composites of different sizes. This process has the disadvantages of requiring more equipment and having greater maintenance problems.

(12) Water/cement/waste ratios. Waste to cement and water ratios are best determined by treatability studies because each waste will vary in composition. Literature indicates that the success of a solidification process must be verified by bench scale tests, due to the possibility of unanticipated interference between the waste and the solidification media. Cement usually has a waste loading factor of approximately 50 percent. (Only 50 percent of the final volume is waste.)

(13) Advantages and disadvantages. Advantages and disadvantages of cement solidification are presented in Table 8-17. More detailed discussion of each item is presented in the following paragraphs.

(14) Advantages. Cementation has many advantages as an immobilization process for radioactive wastes. These include:

(a) It is inexpensive.

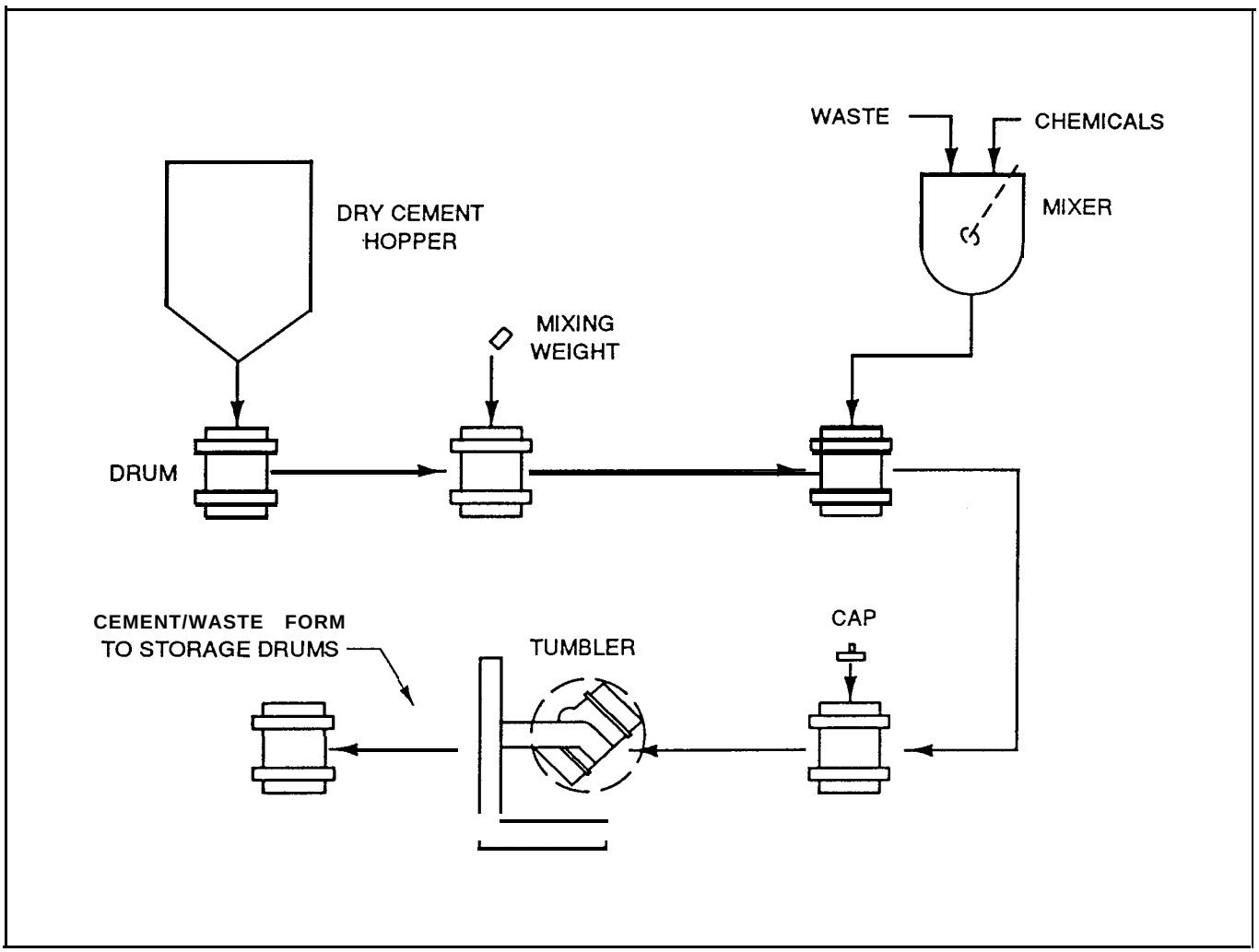

Figure 8-13. Example of in-drum mixing process

(b) Solidified waste will normally be structurally sound and can withstand the pressures imposed by the overburden in disposal trenches.

(c) Solidified waste will normally have a low permeability, which can be improved with the addition of polymers.

(d) Dewatering is not a necessary pretreatment, and additives such as sorbents can be included to further stabilize the waste form.

(e) Materials and equipment are easy to find and remote-control equipment can be obtained if necessary.

(f) Plasticized coatings can be used on the exterior of the waste-grout mixture to further protect against liquid intrusion.

(g) Hydraulic cement costs on the order of $0.10/lb or less.

(15) Disadvantages. Cementation also has several disadvantages, which must be considered when choosing a treatment method. They are as follows:

(a) Waste can leach from the matrix because it is not chemically bound. The addition of sorbents and emulsifiers often lowers the leaching losses from the treated wastes.

(b) The solidified waste form increases the volume by a factor of 1.3 to 1.5, which will increase disposal costs based on volume. However, treatment systems employing volume reduction of the waste will concentrate the activity, which will in turn increase disposal costs based on activity.

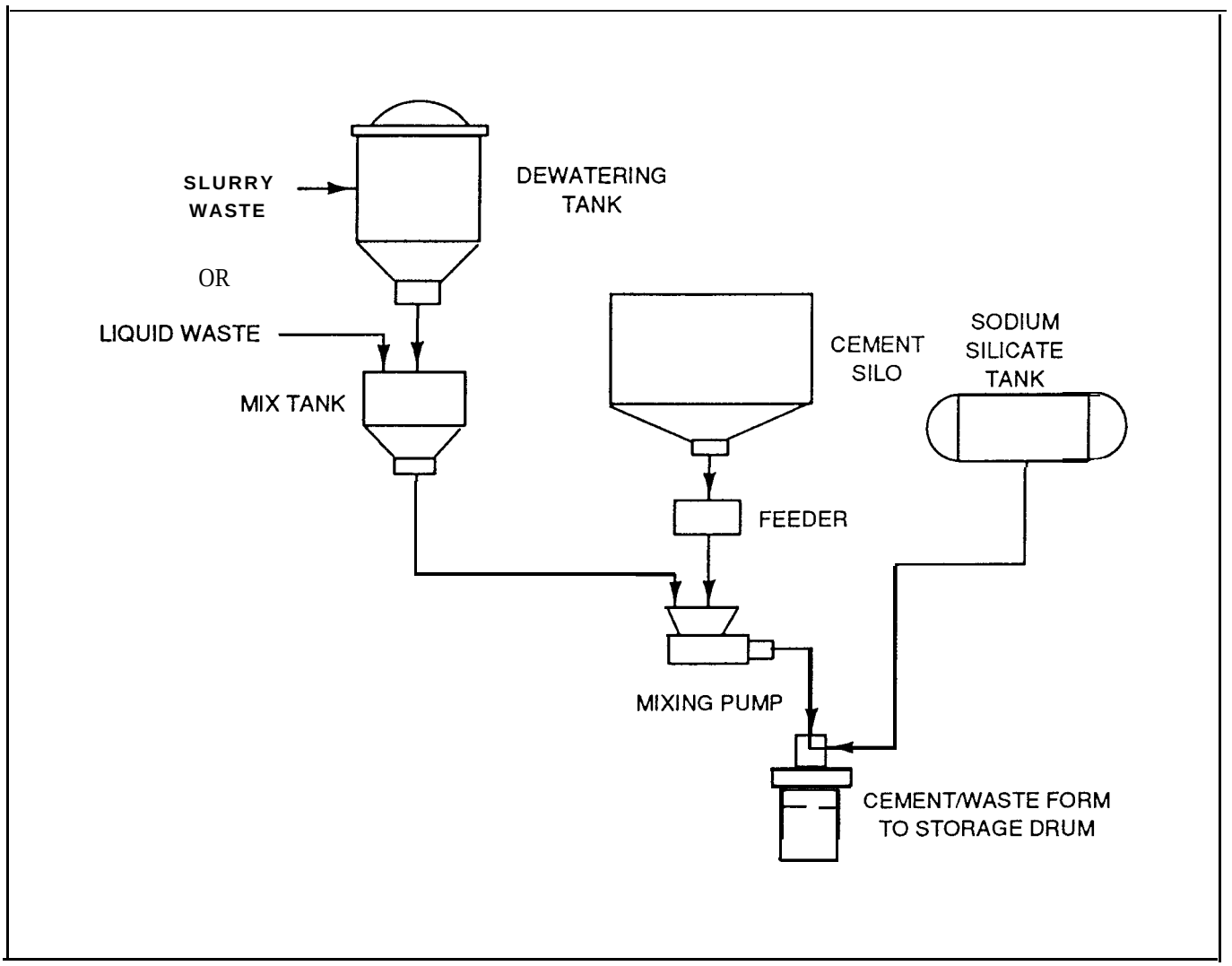

Figure 8-14. Example of in-line mixing process (Source: IAEA 1983)

(c) Solidified waste can be adversely affected by the temperature and pH inside the disposal trenches, causing it to crack or crumble.

(d) Waste constituents shown in Table 8-18 may adversely affect cement solidification. Pretreatment may be effective in preventing problems for many of these constituents.

(e) If ammonium ions are present in the waste, the high pH of the cement-grout mixture may cause ammonia gas to be formed.

(f) Exothermic reactions may occur if the cement-grout or concrete is mixed with highly acidic wastes.

(g) Some metals are very soluble in alkaline environments, which would create a leachate problem.

(16) Treatability studies. To be assured that cementation is a viable treatment choice, a thorough waste analysis and sample testing (treatability study) should be conducted. Although bench-scale studies will yield such information, a pilot-scale study of the process will provide more accurate, realistic testing and information to predict the feasibility of the proposed solidification/stabilization treatment process. Treatability studies are further discussed in Chapter 13. Waste characterization is discussed in Chapter 6.

(17) Incompatible substances. Table 8-18 lists waste constituents that may cause problems with cement

Table 8-17
Advantages and Disadvantages of Cement Solidification

Advantages	Disadvantages
Inexpensive	Wastes can leach from matrix
Structurally sound	Volume increase
Can withstand high pressures	Temperature and pH can degrade end product
Low permeability	Many constituents may adversely affect cementation
Dewatering is not necessarily a pretreatment	Ammonia and hydrogen gases can be produced
Easy to find equipment	Exothermic reactions may occur
Remote-control equipment available	Metals may leach
Plasticized coatings can be used to reduce leaching	

solidification. If sodium salts of arsenate, borate, phosphate, or codate, sulfide salts of magnesium, tin, zinc, copper, or lead, organics, some silts and clays of extremely small particle size, coal, or lignite are present in significant quantities, the waste form will neither set, cure, nor endure sufficiently.

(18) Post-treatment requirements. The waste form must meet certain post-treatment performance requirements, and quality assurance/quality control checks must be followed. These are discussed in detail in Chapter 9.

b. Thermoplastics.

(1) Introduction. Thermoplastics can also be used as matrices for immobilizing radioactive wastes. This process is commonly called "thermoplastic microencapsulation." The most common thermoplastic used is bitumen, which is also known as asphalt. Polyethylene and polypropylene are examples of other thermoplastics that can be used. This technique differs from cementation in that the bitumen must be heated to be mixed with the waste, and the waste must either be dried before treatment or the water must be driven off during the process. The same type of containers are used as for cementation (see Chapter 10). Because of the nature of encapsulation, waste forms containing up to 50 percent by weight of solid waste can be achieved. The literature also reports waste loading factors of 45-60 percent.

Table 8-18
List of Waste Constituents That May Cause Problems with Cement Solidification

Potential Problem Constituents Which May Be Expected in the Waste Stream	
Inorganic Constituents	**Orqanic Constituents-Aqueous Solutions**
Berates[1]	Organic acids'
Phosphates[1]	Formic acid (and formates)
Lead salts[2]	
Zinc salts	"Chelates"[1,3]
Ammonia and Ammonium salts	Oxalic acid (and oxaltes)
Ferric salts	Citric acid (and citrates)
"Oxidizing agents"[1]	Picolinic acid (and picolinates)
(often proprietary)	EDTA (and its salts)
Permanganates[1]	NTA (and its salts)
Chromates[2]	
Nitrates[1]	"Decon solutions'"
Sulfates[1]	Soaps and detergents'
	Organic Constituents-Oily Wastes
	Benzene[12]
	Toluene[12]
	Hexane[1]
	Miscellaneous hydrocarbons
	Vegetable oil additives

Potential Problem Constituents That May Be Avoided By Housekeeping or Pretreatment'	
Generic Problem Constituents	**Specific Problem Constituents-Organic[5]**
Oil[1] and grease	Acetone[1,2]
"Aromatic oils"[1]	Methyl ethyl ketone[2]
"Organic solvents"[1,2]	Trichloroethane[2]
Dry-cleaning solvents[1,2]	Trichlorotrifluoroethane[2]
"Industrial cleaners"[1,2]	Xylene[2]
Paint thinners[1,2]	Dichlorobenzene[2]
"Decon solutions"[1]	
Soaps and detergents[1]	
	Specific Problem Constituents-Inorganic
	Sodium hypochlorite[1]

[1] These constituents have been specifically identified by vendors as having the potential to cause problems with cement solidification of low-level wastes.
[2] The presence of these constituents may result in the generation of mixed wastes. The Environmental Protection Agency should be contacted for more information.
[3] All of these chelating agents could be identified as "organic acids."
[4] Good housekeeping and pretreatment could also be effective in preventing problems with cement solidification for many of the constituents listed in the top list.
[5] These specific constituents also fall into several of the "generic" problem constituents "categories" listed at the left.

Source: NRC 1991

(2) Modified sulphur cement. Modified sulphur cement, also called sulphur polymer cement, has emerged as another alternative to hydraulic cement and bitumen for the solidification of radioactive wastes. Sulphur cement is produced in excess of 5 million tons (4.5 billion kg) per year by the U.S. Bureau of Mines to make use of by-product sulphur. It is made by reacting elemental sulfur with a total of 5 wt % hydrocarbon modifiers consisting of equal parts of dicyclopentadiene and oligomers of cyclopentadiene. Modified sulphur cement is a thermoplastic that begins melting at 110 "C, has an optimum pour temperature of 135 "C, and a maximum safe operational mixing and pouring temperature of 150 °C. The modified sulphur cement, like bitumen, must be combined with a dry waste form and cooled to produce a solid waste form. A strong, durable waste form is produced at a cost of $0.37/kg ($0.17/lb). The sulphur cement is stable and resistant to extremely harsh environments and attack by most corrosive acids and salts. A chemical reaction is not required for solidification, as in hydraulic cement. Its mechanical strengths are approximately double those of most hydraulic cements, and full strength is attained within hours rather than weeks as for hydraulic cement. Modified sulphur cement has the same density as portland cement if identical waste is used. Linear shrinkage is slightly greater than portland cement.

(3) Applications of modified suphur cement. Modified sulphur cement has been used at Brookhaven National Laboratory for the solidification of LLRWS containing sodium sulfate salts, boric acid salts, and incinerator bottom ash. It has also been used for the treatment of a mixed waste containing incinerator fly ash. Modified sulphur cement offers a valuable operational advantage in that the mixer does not have to be emptied and cleaned upon completion of a pour. Instead, the modified sulphur cement and waste mixture can be kept molten until a later time or it can harden and be remelted later. Brookhaven National Lab recommends that sulphur cement should not be used to stabilize nitrate salts and other oxidizers because the mix could become reactive. Dried ion exchange resins and expanding clays pick up moisture during the immersion test, which causes them to swell and rupture the cement. Thus, these substances should not be solidified with modified sulphur cement either.

(4) Batch and continuous processes. There are several different microencapsulation processes involving varying ways of mixing and drying. They can be classified into batch processes and continuous processes. The following descriptions are from Technical Reports Series (TRS) 222, p. 59 (International Atomic Energy Agency (IAEA) 1983).

(5) Batch process with evaporation. For liquid wastes and sludges, a batch-bitumenization process with evaporation can be used (Figure 8-15). A volume of waste is continuously mixed with a volume of molten bitumen externally heated to 200 °C. The water evaporates and the solids are mixed with the bitumen. The mixture is then poured into containers and cooled. Local overheating and formation of incrustation may occur if the temperature is not maintained within a narrow interval.

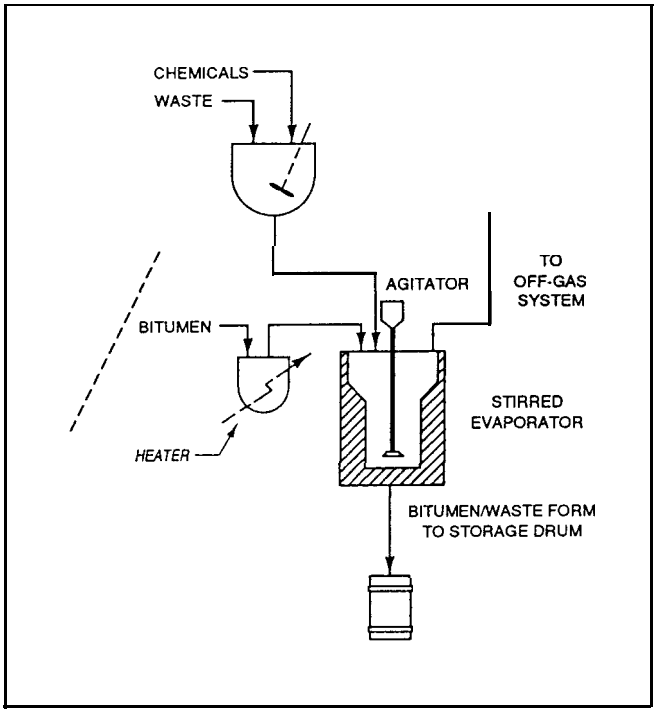

Figure 8-15. Stirred evaporator batch process

(6) Batch process without evaporation. Batch-bitumenization process without evaporation (Figure 8-16) can also be used, but the waste must be dried before treatment. A steam-heated dryer is used which measures the correct amount of waste and feeds it into the mixer. The waste is mixed with bitumen at 130 'C and then released into containers to cool. A steam collection and treatment system must be included to catch and filter the steam and off-gases. This system is simpler than the batch process with evaporation, because the evaporation and mixing steps are separated. Thus, different power demands do not arise which avoids overheating and incrustation formation.

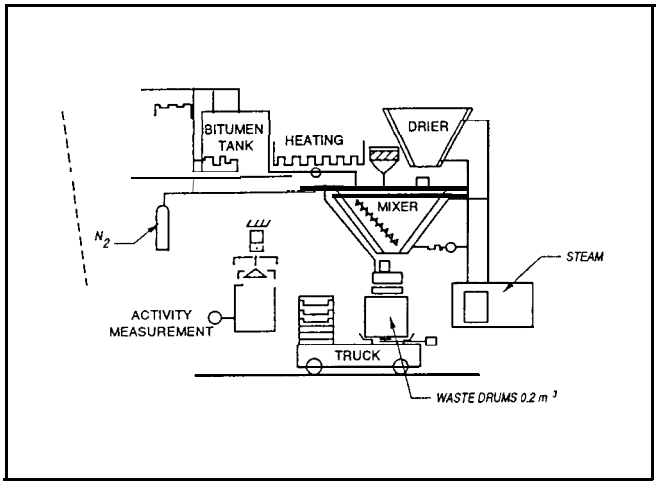

Figure 8-16. Batch process without evaporation (Source: IAEA 1983)

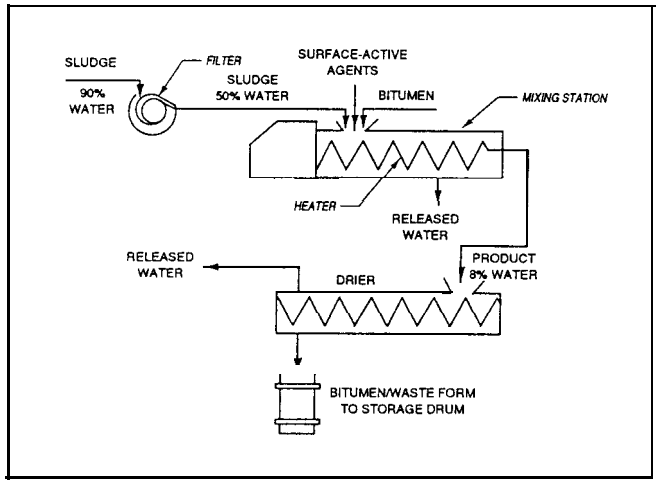

Figure 8-18. Two-step extrusion process (Source: IAEA 1983)

(7) Single-step continuous extrusion process. The single-step extrusion process (Figure 8-17) can treat a variety of wastes, including liquids, sludges, and particulate. The waste and melted bitumen are continuously fed into a twin-screw extruder that is heated. As the mixture is blended in the extruder, the water evaporates into steam domes. The mixture is then poured into drums located on a rotating platform. The continuous operation of this system is desirable. However, an off-gas collection system is required. Also, the process parameters must be carefully controlled, which requires adequate instrumentation and skilled operators.

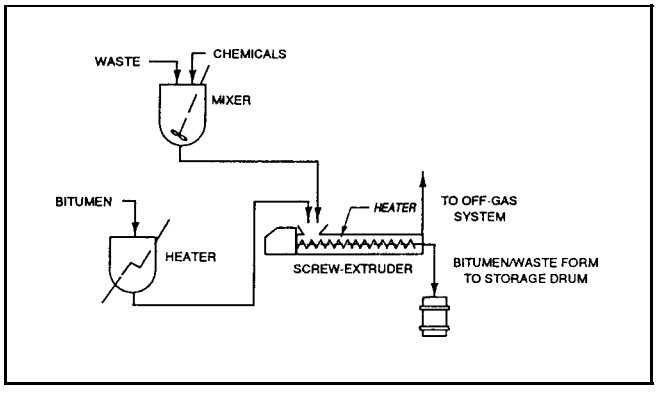

Figure 8-17. Screw extruder evaporation process

(8) Two-step continuous extrusion process. A two-step extrusion process (Figure 8-18) has been developed which is very similar to the one-step process. Here, the waste passes through two screw extruders. In the first, a great deal of the water is pressed off. In one example, the waste went from containing 50 percent water to 8 percent water. In the second extruder, the remaining water is evaporated, and the waste mixture is released into a container. In the example referenced, the final mixture contained 0.5 percent water. The two-step extrusion process has a higher capacity than the one-step process, but the equipment and maintenance costs are much higher.

(9) Advantages and disadvantages. Advantages and disadvantages of bitumen solidification are presented in Table 8-19. A more detailed discussion is presented in the following paragraphs.

Advantages and Disadvantages of Bitumen Solidification

Advantages	Disadvantages
Can immobilize very soluble, toxic materials	Costs will be considerably higher than cementation
Bitumen is insoluble in water	Waste form must rely on a container for support
Leaching potential below cementation	Wastes must be dewatered
Microorganisms have little effect	Volume and weight increase
Volume increase is not as drastic as cementation	Bitumen is combustible
Wastes are retrievable	Can be damaged by radiation
Remote control equipment available	Softens at high temperatures
Plasticized coatings can be used	Tendency to swell

(10) Advantages. Bitumenization is a widely used treatment for low-level and mixed radioactive wastes and has many advantages. They are as follows:

(a) Bitumen offers a strong internal matrix that can solidify and immobilize very soluble, toxic materials.

(b) The waste form is liquid-free and bitumen is insoluble in water, which reduces the leaching potential below that of cementation.

(c) Microorganisms and groundwater have little effect on the treated wastes.

(d) Since the waste is dried, the initial and final weights and volumes will not be as drastically different as with cementation. This saves on disposal costs.

(e) The wastes are retrievable.

(f) Remote control equipment can be obtained if needed.

(g) Plasticized coatings can be used on the exterior of the waste form to further protect against liquid intrusion.

(11) Disadvantages. The following are important disadvantages to consider before selecting microencapsulation as a treatment alternative.

(a) Equipment, labor, and power costs will be considerably higher with bitumenization than with cementation.

(b) The waste form must rely on a container for support in the disposal trench, because the bitumen is solid but not rigid.

(c) The waste must be dewatered before or during treatment.

(d) The weight and volume of the final waste form is large. However, because the waste is dewatered, the difference between the initial and final weights is not as great as with cementation.

(e) The bitumen is combustible, although not easily flammable.

(f) The bitumen may be damaged by radiation.

(g) The bitumen softens at temperatures greater than 100 °F.

(h) The bitumen has a tendency to swell.

(12) Incompatible substances. Waste-bitumen interactions are just as important as waste-cement interactions. Many substances are incompatible with bitumenization. Solvents and greases will cause the waste form to be too elastic. The treated waste will crack and split if chemicals that react with the organic portion of the matrix are included, such as nitrate, chlorate, and perchlorate salts. Borate salts cause the mixture to solidify too quickly, which could be very damaging to equipment. Dehydrated salts may rehydrate out of solidification if contact is made with water. Substances, such as solid hydrocarbons, sulfur, perchlorates, or nitrates, which combust at high temperatures, will bum or explode at the 130 °C to 200 °C used during the microencapsulation process.

(13) Temperature effects. At temperatures less than O °C, bitumen loses its plastic properties and becomes more glass-like. This temperature is dependent on the type of bitumen. A range of +5 °C to -10 °C is reported in the literature.

(14) Radiation effects. The stability of bitumen with respect to radiation is of primary importance. Dose rate and total absorbed dose are the main factors influencing the radiation stability of the bitumen. The type of bitumen plays only a minor role. A total absorbed dose of 10^8 to 10^9 rad is commonly reported for the radiation resistance of bitumen waste forms.

c. Polymers.

(1) Introduction. Polymer solidification is another viable treatment for radioactive wastes. Urea-formaldehyde, polyacrylamide, and polyester are examples of polymers that can be used in this process. The waste, polymer, and a catalyst are mixed together in either an in-line mixer or in-drum system. The polymeric processes do not really solidify the wastes; the long chained molecules of the organic polymer are linked together to form a porous sponge that 'traps' the waste.

(2) Characteristics. Polymer processes are generally conducted at temperatures between 20 "C and 60 'C. Depending upon the polymer, the waste may or may not have to be dewatered before being treated. Also

polymer-dependent, the waste mixture may form a rock-hard solid or a more flexible mass.

(3) Urea-formaldehyde process. Urea-formaldehyde (UF) was once the most common polymer process, but has been replaced by other polymers because of several problems. The UF process is performed at a pH of 1.5, which is much too low for use in carbon steel drums. If the waste contained any liquid, the waste form would "weep" for months, necessitating the use of additional absorbents. Polyethylene and polyacrylamide have replaced the UF process in most instances.

(4) Costs. Polymer grout can fill more than 97 percent of the void space in a waste material, which makes the waste more solid and less permeable. Polymers are, in general, much more expensive than cement grout. Thus, the amount of voids and the type of void spacing in the waste can determine if the polymer grout process will be cost-effective. Compaction and dewatering also impact the effectiveness of the process. The effect of radiation on the compressive strength of polymers is not great, even at $>10^9$ rad dose.

(5) Advantages and disadvantages. Advantages and disadvantages of polymer solidification are given in Table 8-20. A more detailed discussion is given in the following paragraphs.

Table 8-20
Advantages and Disadvantages of Polymer Solidification

Advantages	Disadvantages
Can solidify a wider range of wastes	Wastes would be released if the polymer failed
Reduces permeability of waste	Expensive
Many polymers do not require heating	Unknown response to environmental stresses
Short curing times	Water may affect waste form
Much less weight increase than for cement or bitumen	Container needed for support
	Some polymers are too acidic for a carbon steel drum
	Temperatures can adversely affect waste form
	Skilled labor needed
	Potential for radiation damage

(6) Advantages. Listed below are the advantages for using polymerization.

(a) Polymers can solidify a wider range of wastes than other solidification processes, such as organic wastes.

(b) The waste material is less permeable than before polymerization.

(c) Many polymers do not require heating.

(d) Curing times are usually much less than for cementation or bitumenization because of the work of the catalyst.

(e) The polymer matrix is much lighter than cement or bitumen so the final waste form will be much lighter, which might reduce transportation costs. Volumes will not significantly change.

(7) Disadvantages. The long-term effectiveness of many of the polymers has not been determined, so extra care must be taken when selecting polymerization as a treatment alternative. The following are disadvantages to consider:

(a) The process is expensive.

(b) If the polymer failed, the waste contaminants would be released.

(c) Little information is known about how polymers respond to environmental stresses over time.

(d) Residual water may have a significant effect on the physical integrity of the waste form.

(e) The waste form will most likely need to be held and supported by a container.

(f) Some polymers, such as UF, are too acidic to be in a normal carbon steel drum.

(g) Ground and air temperatures can adversely affect the treated waste.

(h) Skilled labor is needed to operate the treatment system.

(i) The polymer matrix may be damaged by radiation.

(8) Treatability tests. Waste analysis is very important when using polymers. Only polymers that have been extensively tested and proven to be compatible and reliable should be considered.

d. Vitrification.

(1) Introduction. Vitrification, the process of converting materials into a glass or glass-like substance, is increasingly being considered for treating various wastes. The recent modification to the tri-party agreement at Hanford stipulates that LLRW from single-shell tanks will be vitrified rather than being stabilized by cementation. The following information is primarily condensed from the EPA handbook "Vitrification technologies for treatment of hazardous and radioactive waste" (EPA 1992a). Vitrification is conceptually attractive because of the potential durability of the product and the flexibility of the process in treating a wide variety of waste streams and contaminants. These characteristics make vitrification the focal point of treatment systems for high-level radioactive waste and an attractive alternative for low-level radioactive waste. Vitrification may proceed in situ or ex situ.

(2) In situ vitrification (ISV). In situ vitrification is the process of vitrifying the waste as it is present in the environment. An advantage of ISV is that it proceeds in situ without requiring that the material be removed prior to treatment. With radionuclides or dispersible volatile compounds, this may be a significant advantage. Furthermore, the product remains buried underground and onsite, thus limiting liability by keeping the waste product onsite. In situ processes typically operate between 1,600-2,000 °C.

(3) Ex situ vitrification. Ex situ vitrification involves the removal of the contaminated material from the ground and processing the displaced material either onsite or offsite. The advantages of ex situ over in situ lie primarily in the increased amount of control that can be exerted during processing. This control extends to feed composition and melt conditions and this in turn allows for greater control of product characteristics and allows product examination. For processes aimed at a specific waste stream, control is increased because of the relative homogeneity of the waste stream. Secondly, ex situ vitrification allows greater control over the combustion of non-pyrolyzed organics escaping from the melt. For these processes, the environments in the molten glass melt and in the secondary combustion area can be more easily regulated to facilitate efficient organic destruction. Ex situ processes typically operate between 1,000 and 1,600 "C. The main disadvantages of ex situ vitrification are the increased volume of the vitrified waste and the increased cost and worker exposure involved in the excavation and handling of the removed materials.

(4) Glass composition. Glass is a rigid, noncrystalline material of relatively low porosity, often composed primarily of silica, alumina, and oxides of alkali and alkaline earth elements. While phosphate, sulfide, and oxynitride glasses are also important glass types, most glasses used in waste immobilization are silicate glasses. Inorganic waste constituents are immobilized in vitrification processes by chemical bonding or encapsulation within the glass matrix.

(5) Alkali attack. Vitreous materials are often thought of as being "inert," which is somewhat justified since these materials exhibit high corrosion resistance compared with many other materials. It is important to note, however, that all vitrified products are chemically reactive to some degree. There are two major forms of chemical attack on vitrified materials: alkali and acid. Alkali attack begins by hydration of the silica network and may proceed to dissolution of the matrix material. In pure silica glass, the matrix dissolution process can be described by the following equation:

$$2NaOH + SiO_2 \rightarrow Na_2SiO_3 + H_20 \qquad (8\text{-}1)$$

The alkali silicate (Na_2SiO_3 in the example shown) is water soluble, so as the silica network is attacked and dissolved, the other constituents in the vitrified material are released. The rate of alkali attack is generally linear with time; however, the rate can change if soluble materials accumulate in solution, or if insoluble reaction products adhere to the material's surface, blocking the reaction. Alkali attack is highly pH dependent. The rate of attack generally increases by a factor of 2 to 3 for each pH unit increase. Temperature also has an influence on the rate of alkali attack. The rate of attack increases by a factor of 2 to 2.5 for each 10 °C temperature rise. Many chelating compounds attack glasses at a rate comparable to that of strong alkali. Citrate, gluconate, oxalate, tartrate, ethylene diamine tetra-acetic acid (EDTA), and malate all attack glass in alkaline solution. Alkaline phosphate and acetate also attack glass readily. Hydrofluoric acid has a unique ability to dissolve silicate glasses, forming a solution of alkali fluorides and silicon fluorides.

(6) Acid attack. While alkali attack leads to surface dissolution of the vitreous material, acid attack is an ion exchange process which involves the exchange of hydronium ions in solution for ionically bonded elements in the vitreous network. The acid attack reaction rate increases by a factor of 1.5 to 2 for each 10 °C temperature rise. Depending on the composition of the vitrified material, especially its silica content, the pH of the leaching solution influences the rate of acid attack but not as much as in alkali attack.

(7) Feed composition. Composition of the incoming feed can have enormous effects on product durability and processing parameters. Table 8-21 displays some of the effects of various inorganic oxides on processing and glass durability. Modification of the waste stream through additives and/or material removal can have dramatic impacts on processing and product characteristics. However, as Table 8-21 shows, most additives have both desired and undesired effects. Therefore, modification of the feed will often involve compromises based on treatment goals, processing limitations, and waste character.

(8) Waste loading. Increased waste loading does not necessarily increase product leachability. Research on borosilicate glass for the immobilization of nuclear waste has indicated that glass leachability is reduced as the waste loading increases from O wt % to 35 wt %, with only small changes in leachability as the waste loading increases from 35 wt % to 50 wt %. Thus, the amount of waste immobilized by borosilicate glass may not be limited by product durability but by processing considerations.

(9) Joule heating.

(a) In joule heating, an electric current flows through the material. As the material internally resists the current, the current loses power and transfers heat energy to the material. The dissipated power is predicted by Joule's Law. With increased electrical resistance, if current can be maintained, additional power is dissipated and the material heats more rapidly. However, unless the voltage is increased, an increase in resistance will also decrease current. This is predicted by Ohm's Law. Ohm's Law explains why materials with low resistivity are often heated at low voltages (5 to 48 V) in nonvitrification processes. However, soils and other materials heated by joule heating are frequently quite resistant and require higher voltages.

(b) Characteristics of the molten glass place mechanical constraints on the design of a joule heating system. For example, the conductivity of molten glass is ionic; therefore, an alternating current (AC) must be used to avoid the risk of electrolysis, anodization of electrodes, and the depletion of charge carriers. Electrodes must withstand corrosion from the molten glass bath, offer adequate mechanical strength at high temperatures, and have low resistivity. The commercial glass industry generally uses graphite and molybdenum for electrodes. The position of the electrodes in the furnace controls the buildup of convection currents in the melt and, subsequently, homogeneity in the melt. Joule heating can be carried out both ex situ and in situ.

(c) Ex situ joule heating involves feeding the contaminated material into a melter. Some melters are much like electric glass furnaces used to manufacture glass products. Such melters receive waste materials and glass batch chemicals directly on the surface of a molten glass bath. Most melting occurs at the waste/molten glass interface. As waste is heated, volatiles may be released and organics are either pyrolyzed (in an oxygen-poor environment), or oxidized (in an oxygen-rich environment). Off-gas treatment is required to minimize air emission, Figure 8-19 shows a process flow-sheet for a typical joule-heated ceramic melter. Processing problems which may occur in electric melters are discussed in the EPA handbook titled "Vitrification technologies for treatment of hazardous and radioactive waste" (EPA 1992a). These problems can generally be controlled by feed modifications.

(d) The process that is commonly referred to as ISV is more specifically in situ joule heating. ISV was developed by Battelle at Pacific Northwest Laboratory for the U.S. DOE. ISV has been used to treat a variety of hazardous chemical, radioactive, and mixed wastes. ISV converts contaminated soil and other substrates into a stable glass and crystalline product. Figure 8-20 depicts the process.

(e) The Electrode Feed System (EFS) inserts a square array of four graphite electrodes into the contaminated site. This mechanism allows the electrodes to sink to increasingly greater depths as the molten glass increases in volume. Processing continues until the desired treatment level is reached, or until a process-limiting depth is reached. If processing difficulties are

Table 8-21
Effects of Waste-Glass Components on Processing and Product Performance

Frit Components	Processing	Product Performance
SiO_2	Increases viscosity greatly; Reduces waste solubility	Increases durability
B_2O_3	Reduces viscosity; increases waste solubility	Increases durability in low amounts, reduces in large amounts
Na_2O	Reduces viscosity and resistivity; increases waste volubility	Reduces durability
Li_2O	Same as Na_2O, but greater effect; increases tendency to devitrify	Reduces durability, but less than Na_2O
K_2O	Same as Na_2O, decreases tendency to devitrify	Reduces durability more than Na_2O
CaO	Increases, then reduces, viscosity and waste solubility	Increases, then reduces, durability
MgO	Is same as CaO; reduces tendency to vitrify	Is same as CaO, but more likely to decrease durability
TiO_2	Reduces viscosity slightly; increases, then reduces, waste volubility; increases tendency to devitrify	Increases durability
ZrO_2, La_2O_3	Reduces waste solubility	Increases durability greatly
Waste Components	**Processing**	**Product Performance**
$A1_2O_3$	Increases viscosity and has tendency to devitrify	Increases durability
Fe_2O_3	Reduces viscosity; is hard to dissolve	Increases durability
U_3O_8	Reduces tendency to devitrify	Reduces durability
NiO	Is hard to dissolve; increases tendency to devitrify	Reduces durability
MnO	Is hard to dissolve	Increases durability
Zeolite	Is slow to dissolve; produces foam	Increases durability
Sulfate	Is an antifoam, melting aid; increases corrosion of processing equipment	Too much causes foam or formation of soluble second phase

Source: EPA 1992a

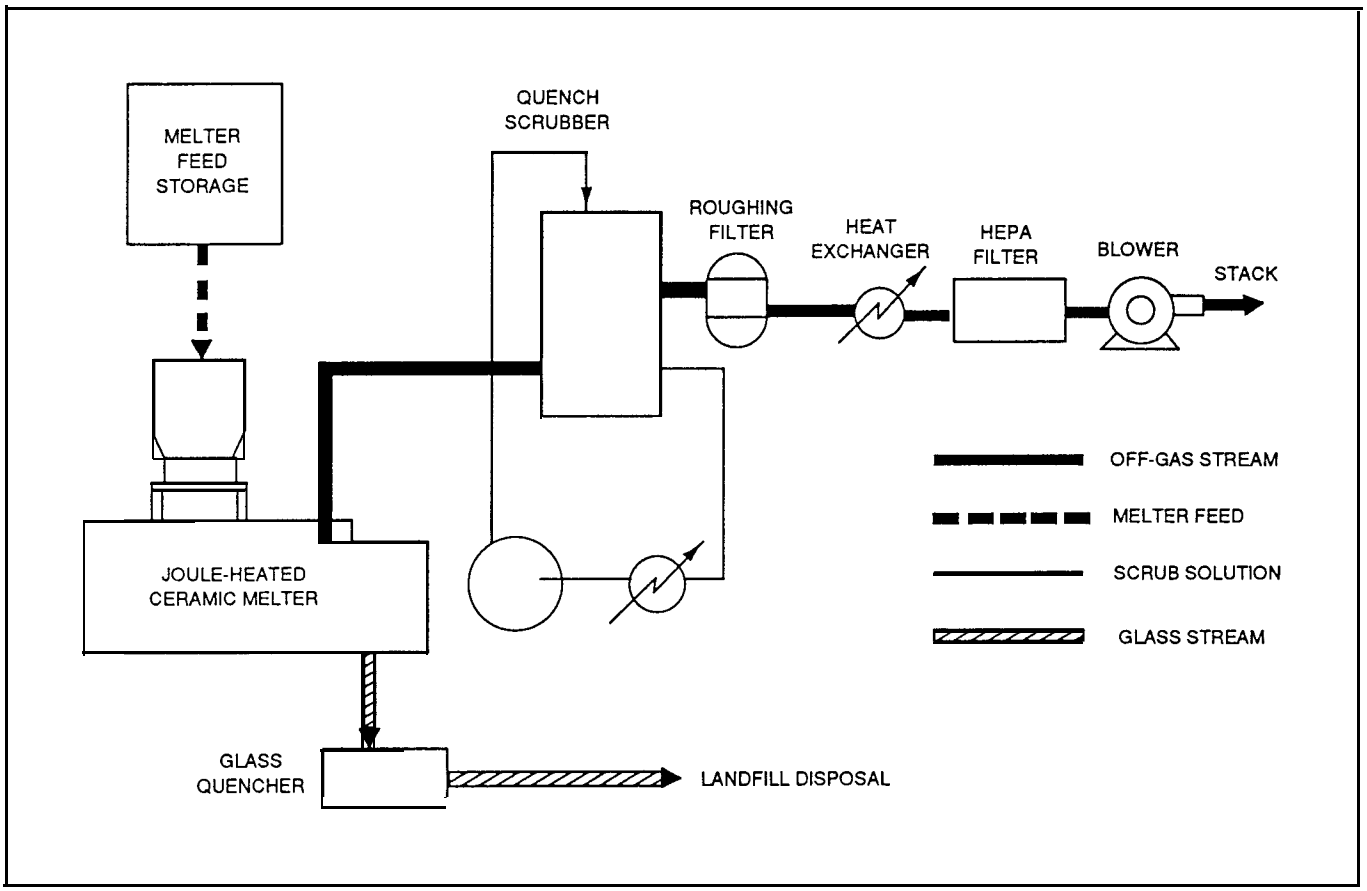

Figure 8-19. Typical JHCM process flowsheet (Source: EPA 1992a)

encountered, then EFS can "grasp" the electrodes and thus prevent their downward movement until the difficulty is addressed. Previously, ISV required insertion of the electrodes into boreholes prior to vitrification.

(f) Because soil is not electrically conductive when moisture has been driven off, a conductive mixture of flaked graphite and glass frit is placed between the pairs of electrodes as a starter path. An electrical potential is applied to the electrodes to establish an electrical current in the starter path. The resultant power heats the starter path and surrounding soil to 2,000 °C, well above initial soil-melting temperatures of 1,100 °C to 1,400 °C. The graphite starter path is eventually consumed by oxidation and the current is transferred to the molten soil, which is electrically conductive when molten. As the molten or vitrified zone grows, it incorporates radionucides and nonvolatile hazardous elements, such as heavy metals, into the melt and pyrolyzes organic components. The pyrolized by-products migrate to the surface of the vitrified zone where they combust in the presence of oxygen. A hood placed over the vitrified area directs the gaseous effluents to an off-gas treatment system.

(g) Attempts to reduce costs by utilizing a fabric hood were not successful. Fabric hoods have caught fire twice in ISV tests, once during a Pacific Northwest Laboratory (PNL) test, and once during a Geosafe test. Both fires started when molten material splashed on the hoods . The hoods used at the time of the fires were fabric hoods coated with heat-resistant sealants. Since these fires, both PNL and Geosafe have reverted to previous steel hood designs.

(h) As the melt grows downward and outward, power is maintained at sufficient levels to overcome heat losses from the surface and to the surrounding soil. Generally, the melt grows outward beyond the electrodes to a distance equal to about half of the spacing of the electrodes. The molten zone is circular and somewhat flattened. The tendency to flatten increases as melt size increases.

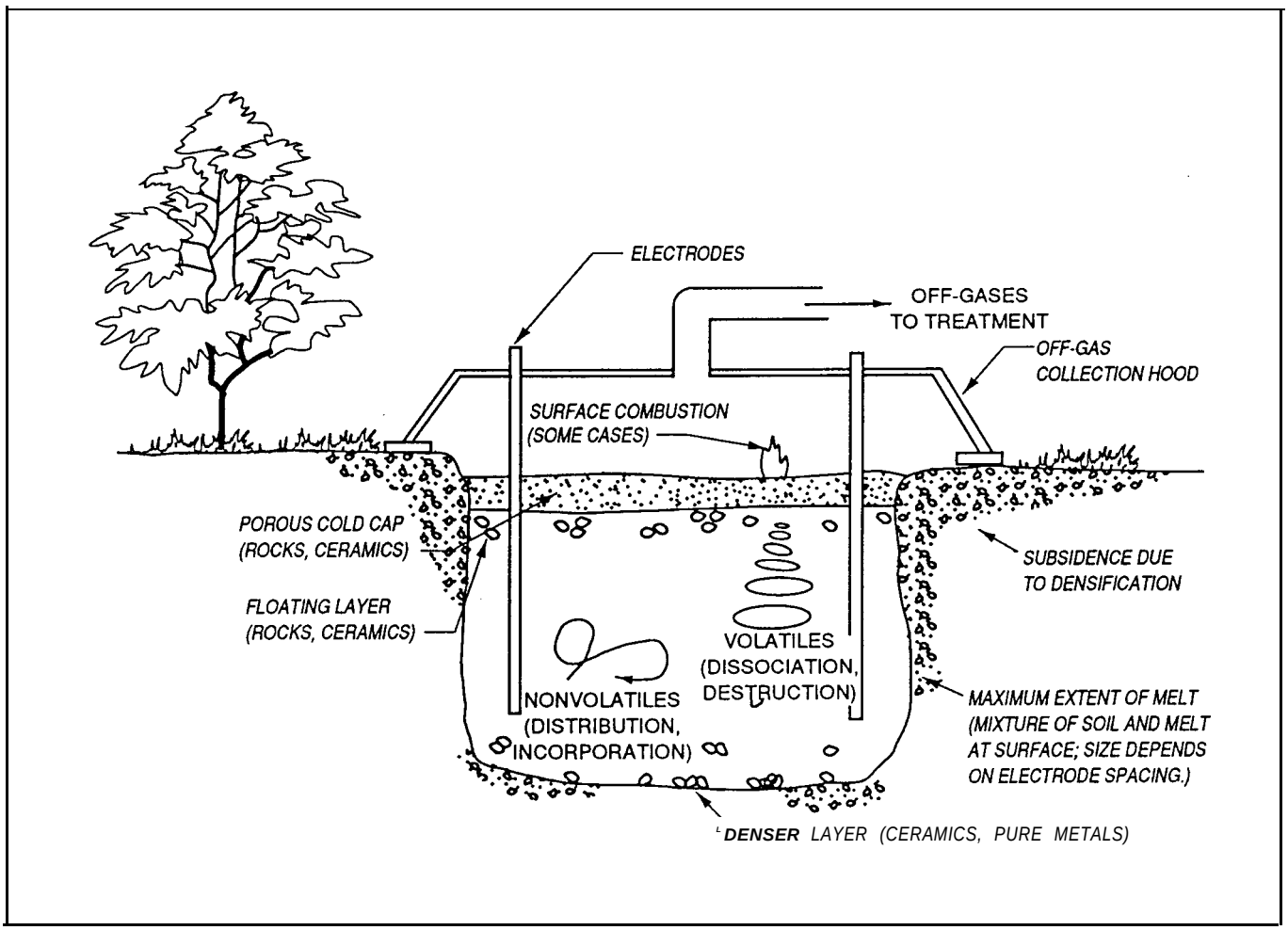

Figure 8-20. Schematic of ISV (Source: EPA 1992a)

(i) In order to control the amperage during ISV processing, operators use a power transformer with multiple voltage taps. At start-up, the ISV process requires high voltage (up to 4,000 V) to overcome the resistance of the soil. Current is relatively low (400 A) at this time. As the melt progresses and resistance decreases, voltage is decreased (down to 400 V by the end of processing) to compensate for the decreased resistance of the molten glass and the resulting increase in current (up to 4,000 A by the end of processing). Processing continues until heat loss from the melt approaches energy delivered to the soil via the electrodes, or until power to the electrodes is shut off.

(j) The normal processing rate for the large-scale system is 3 to 5 tons/hr (2,700 to 4,500 kg/hr). The maximum depth demonstrated thus far has been 5 m by PNL and 5.8 m by Geosafe. The average processing operation lasts about 150 to 200 hr, depending on the depth and electrode spacing.

(k) ISV processing is termed “in situ” when the soils are processed where they presently exist. Placing soil in a trench or container for treatment is termed “staged” processing. For example, a staged application may involve consolidating contaminated soil by removing the soil and placing it in a trench. The filled trench could then be vitrified. Typically, staged application would be most effective where the contaminants are widely distributed in the top few feet of the site. Because ISV is a batch process, it may not be cost-effective to move the hood from setting to setting to vitrify only the top few feet of the contaminated material.

(10) Plasma heating.

(a) Plasma heating is an electrical heating process which relies on the conversion of a gas into a plasma through the application of energy by an electric arc. Plasma heating offers high operating temperatures and high power densities. Unlike joule heating vitrification, which grew out of the glass-making industry, plasma heating vitrification has grown out of the speciality metals industry.

(b) A plasma is an ionized gas. The ionized particles make plasma an excellent electrical conductor. There are two types of plasmas: plasmas in which the degree of ionization is close to unity and plasmas which are only partially ionized. The first type occurs in thermonuclear fusion and is found in the sun. In partially ionized plasmas, the degree of ionization varies from 2 to 50 percent. The temperatures of partially ionized plasmas vary between 2,000 ºK and 5,000 ºK. Partially ionized plasmas are used in industrial applications.

(c) Plasma is commonly created by passing a gas through an electrical arc. The arc can be generated by direct current (DC) or alternating current (AC). With a DC arc, the cathode generally consists of tungsten and the anode generally consists of copper. The anode also typically functions as a nozzle directing the plasma. In contrast, in a single phase AC arc plasma generator, the electrodes act as the cathode and anode alternately, and must therefore be made of the same material.

(d) Gases used in generating a plasma arc include nitrogen, oxygen, noble gases, air, and mixtures of these gases. Electrode life is a major concern and is influenced by electrode material, the gas used, and electrical current levels. Electrode structure, gas injection method, and nozzle design help shape the plasma and determine heating efficiencies.

(e) The product is heated in one of two ways: by a non-transferred arc or by a transferred arc. A non-transferred arc uses two internal electrodes. Non-transferred arcs heat only via conduction and produce a dispersed heat that is needed for tasks such as air and gas heating and drying. A transferred arc uses the working material as one of the electrodes. Therefore, in a transferred arc application, heating occurs via convection, radiation, and electrical resistance. It is the transferred arc that is the heat source in hazardous and radioactive vitrification applications. In these applications, the plasma arc melts the material to form a molten bath from which glass is periodically removed to form the immobilized waste product.

(f) Retech, Inc., of Ukiah, CA, has developed a plasma heating furnace called the plasma centrifugal reactor (PCR). In the PCR, prepared waste materials are fed into a rotating reactor in which a transferred-arc plasma torch is operating. The rotating reactor also serves as one electrode for the transferred arc. The plasma torch, which is capable of temperatures exceeding 10,000 ºC, heats the waste material beyond the point of melting to about 1,600 ºC. Centrifugal force created by the rotating reactor prevents waste and molten material from flowing out of the reactor through the bottom. The rotation of the reactor also helps to transfer heat and electrical energy evenly throughout the molten phase. Periodically, the melted material is allowed to fall into a slag chamber where it is collected in waste containers. Figure 8-21 is a schematic of a demonstration PCR; it shows the location of the electrodes and the way in which the molten glass pools due to centrifugal forces. Organics and other volatiles emitted during the plasma heating pass from the reactor chamber to a secondary combustion chamber into which an oxidizing gas is added, thus allowing for further destruction of any organics remaining in the gas phase. Resulting off-gases are then transferred to an off-gas treatment system to ensure safe air emissions. Figure 8-22 illustrates the components of a full-scale PCR.

(11) Microwave heating.

(a) Microwave heating is a form of dielectric heating. A dielectric is a material which is an electrical insulator. A dielectric becomes polarized when it is placed in an electric field. If the electric field is alternating, successive distortion of the molecules causes heating. Materials such as incinerator ash, thermal insulators, concrete, soil, and sand are mostly composed of dielectric material and can be directly melted by microwave radiation.

(b) Dielectric heating is usually classified into two subcategories on the basis of frequency ranges used: radio frequency heating using frequencies between 10 and 300 MHz, and microwave heating using frequencies between 3,000 and 30,000 MHz.

(c) The main advantage of microwave heating is that the heat is produced directly and solely in the mass of the material to be heated. Another advantage is high power density. The main disadvantage is relatively high energy

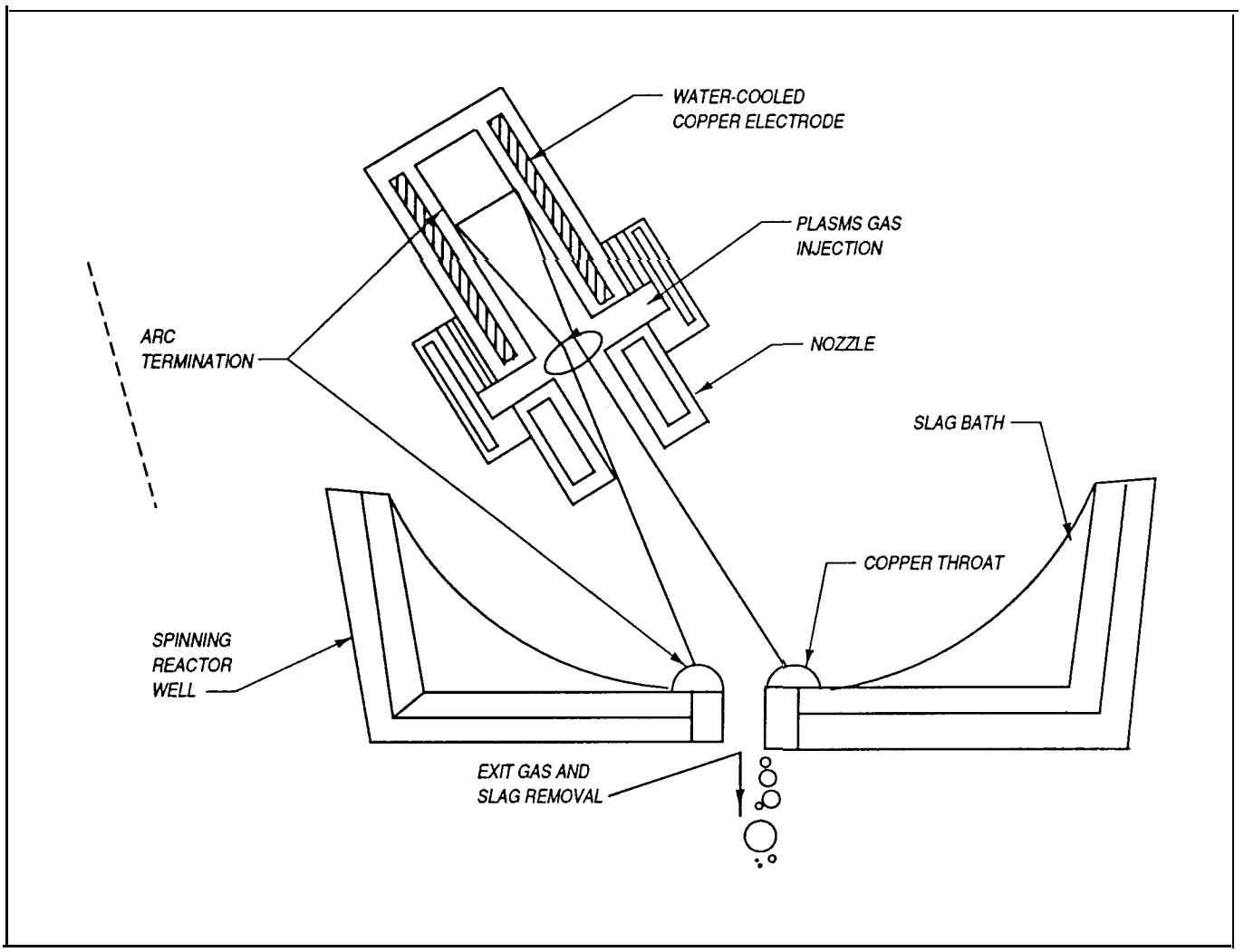

Figure 8-21. Schematic of the demonstration PCR showing the bottom-pour configuration for exit gas and molten glass (Source: EPA 1992a)

consumption and corresponding costs. Arcing resulting from induced currents in metallic components of waste may damage the microwave generator unless special provisions are made. Microwave technology has been used in Japan as a treatment process for a number of wastes and is being developed in America by Oak Ridge National Lab, Sandia National Lab, and the Rocky Flats Plant .

(12) Resistance heating. Initial large-scale testing of vitrification for high-level waste was done in crucibles heated by external resistance heaters. Crucible heating has the distinct disadvantages of low melt rates caused by slow heat transfer and lack of agitation and of temperature nonuniformities that make it difficult to homogenize the glass.

(13) Induction heating. Currently, induction heating application to hazardous and radioactive wastes is represented by the French AVM process (Atelier de Vitrification Marcoule). However, because induction heating is also used in commercial glass manufacturing, it is potentially applicable to radioactive wastes. Induction heating is accomplished by inducing currents in the material to be heated. For example, a solenoid can be used to create a variable magnetic field inside the coil and around it. If an electrically conductive body is placed inside the magnetic field, the variation in the magnetic field causes a variation in the magnetic flux passing through the material and induces an electromotive force (EMF) current. The EMF current causes eddy currents, and these are converted into heat due to the Joule effect.

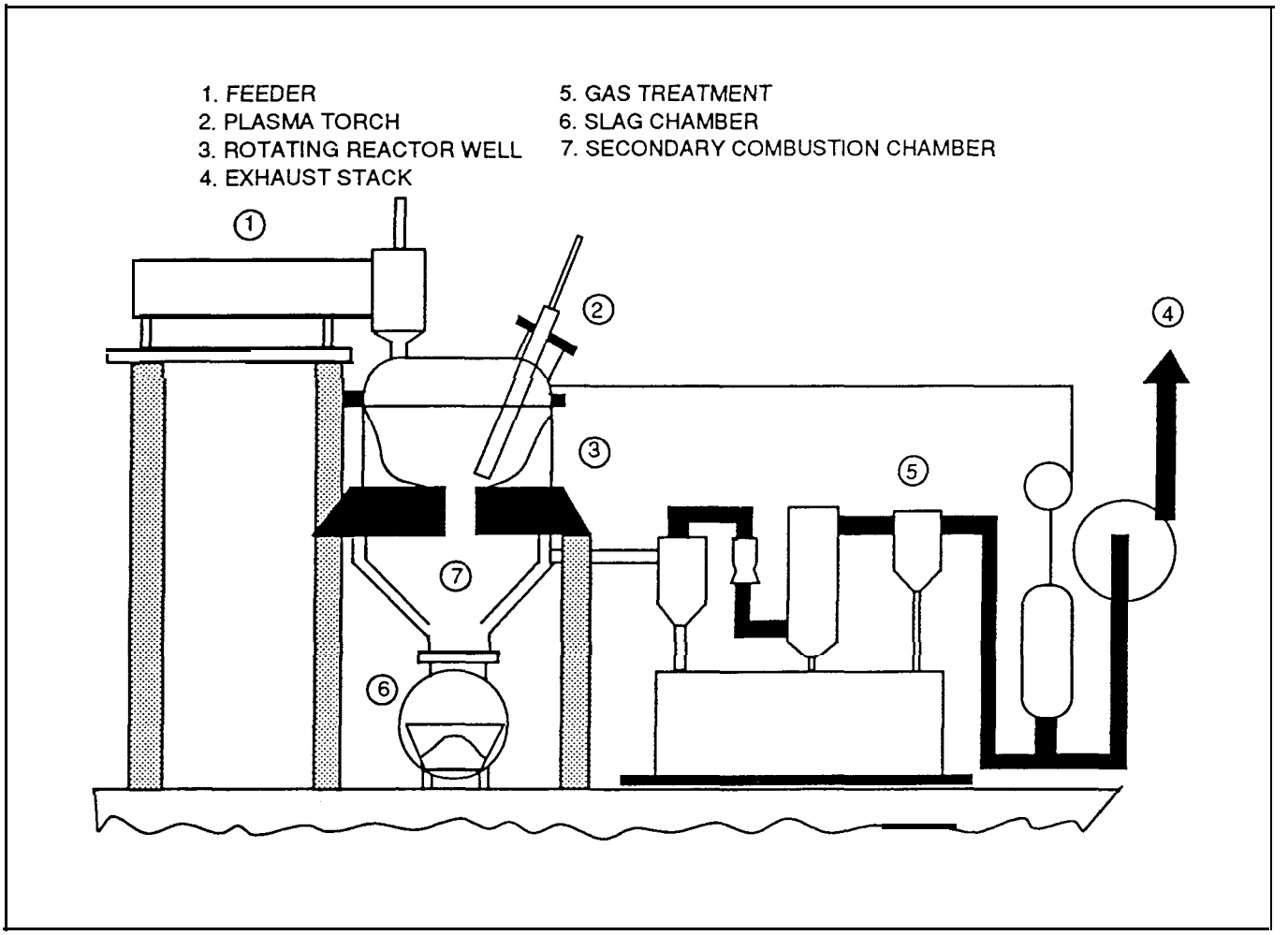

Figure 8-22. Schematic of a full-scale PCR [Source: EPA 1992a)

(14) Electric arc furnaces. Electric arc furnaces heat by creating current flow between two electrodes in an ionized gas environment. They differ from plasma furnaces in that a plasma is not created and therefore not part of the heat transfer mechanism. The electric arc furnace was first developed in the metal industry. An electric arc process is being used by Electro-Pyrolysis, Inc., and the Massachusetts Institute of Technology to pyrolyze solid hazardous materials. It is also being used in vitrification tests in Albany, OR, of municipal solid waste bottom ash, fly ash, and the ash from sludge incineration. The Japanese are also working on electric-arc vitrification.

(15) Incineration/vitrification processes. Kiln incineration may be used as a vitrification process by itself or prior to a vitrification step in a treatment train. Vitrification is ideal for immobilizing the ash that is produced from incineration. In addition, rotary kiln incinerators operated in the slagging mode may produce a vitrified product. At high enough temperatures, the material in the kiln will deform, producing an amorphous state in that material. This molten slag can then be tapped and may harden into a glass or glass-like product upon cooling, based on material composition. Leachability tests were conducted on the hardened slag produced in a 50,000-metric-ton/year rotary kiln operating at Rijnmond, Holland. Results indicated that the slag, as produced, would pass the EPA Toxicity Characteristics Leaching Procedure (TCLP) tests.

(16) Advantages and Disadvantages. Advantages and disadvantages of vitrification are presented in Table 8-22. A more detailed discussion is given in the following paragraphs.

(17) Advantages of vitrification. Potential capabilities and advantages of vitrification include:

Table 8-22
Advantages and Disadvantages of Vitrification

Advantages	Disadvantages
Organics are thermally destructed	Combustibles may generate gases
Reduced leachability of inorganic	Halogenated compounds affect product durability
Excellent long-term durability	Reducing agents cause problems
Offers treatment of a wide range of waste streams	Certain metals may cause quality or volatility problems
Can immobilize concentrated end products	Costly off-gas treatment system needed
Applies to both organics and inorganic	Shorting of electrodes is possible
Volume reduction	High cost of energy
Waste glass may be reused	Depth limitations
ISV offers reduction in worker safety and costs	Radiation shielding may be needed

(a) Organics may be thermally destructed by pyrolysis and combustion during vitrification.

(b) Waste glasses of many types have shown reduced leachability of inorganic.

(c) Long-term durability indicates a product that reduces leaching for long periods of time. It is possible to have a material that currently reduces leaching but that may not perform well over many years. Although not measured directly, the long-term durability of waste glass appears to be excellent and may extend to geologic time periods, as indicated by natural glass systems that have been stable for millions of years.

(d) A wide range of waste streams can be treated by vitrification without compromising the integrity of the final product.

(e) Vitrification can immobilize concentrated end products from other treatment processes such as incineration and precipitation.

(f) Because vitrification is both a high temperature process and an immobilization process, it can apply to both organics (thermal destruction) and inorganic (immobilization). Vitrification may, therefore, be preferred at sites that present a complex mixture of hazardous and/or radioactive contaminants.

(g) During vitrification, volume of the incoming waste is generally reduced while density increases. This reduction in volume is the result of the vaporization of void gases, the vaporization of water in the feed, and the combustion of organic materials present in the feed. Volume reductions include 25-45 percent for ISV; 70-80 percent for glass melter vitrification of incinerator ashes; and 98-99.5 percent for microwave melter vitrification of liquid and sludge wastes. Obviously, volume reduction values vary widely with waste feed. Volume reduction during an ISV melt results in a depression at the treatment site which may be filled with clean soil or other fill. Density of vitrified products ranges from 2.3 to 3.0 g/cm^3, well above the densities of O.7 to 2.2 g/cm^3 measured for stabilized/solidified products.

(h) Vitrified waste glass may potentially be reused in various ways. Reuse may depend upon whether the product can be delisted according to EPA regulations.

(i) The avoidance of excavation, processing, and reburial of the product applies only to ISV and is important in two respects: worker safety and costs. Worker safety and costs are both reduced because the material is left in place.

The first five of these capabilities (a-e) are the direct result of the product. Capabilities f and g are the result of the flexibility of glass and the high temperatures under which vitrification is conducted. The last two capabilities are highly site-specific and will depend on site characteristics and treatment objectives.

(18) Disadvantages of vitrification. Disadvantages of the vitrification of waste materials include:

(a) Combustible materials generate gases which may carry contaminants to the glass surface and away from the melt. Pre-treatment processes can control combustibles in ex situ vitrification; however, combustibles must be controlled by processing conditions in ISV.

(b) Halogenated compounds affect product durability because incorporation into the glass in high enough concentrations may produce an undesirable, porous product.

(c) Reducing agents such as carbon and ferrous salts may reduce arsenates and selenates to lower valence

compounds that are more volatile and thus reduce incorporation efficiencies of these metals.

(d) Certain metals such as mercury and cadmium may be undesirable because of their difficulty to incorporate into the melt, their reduction of product quality, and/or because their volatility requires treatment in the off-gas system.

(e) An elaborate and costly off-gas treatment system is required because of the potential volatilization of contaminants.

(f) In joule heating, metals in the feed may cause shorting of the electrodes. The metals may sink to the bottom of the melt, concentrate there, and possibly create a conduction path that may lead to electrical shorting between the electrodes.

(g) The high cost of energy is a significant disadvantage to vitrification because the process requires large amounts of energy. A primary way in which vitrification can be used efficiently is at highly contaminated sites where the contamination is not diluted. Another factor that drives up cost is the high cost of trained operators.

(h) At present, depth limitations are a serious handicap to ISV. Currently, PNL has achieved a depth of 5 m and Geosafe has achieved a depth of 5.8 m. Sixty percent of DoD contaminated soil sites extend deeper than 5 m. If ISV could be extended to 9 m, then 90 percent of DoD sites would fall within ISV depths.

(i) Gamma radiation must be guarded against by shielding and remote operation. Beta radiation is absorbed in the glass except from the surface layer, and alpha radiation is completely absorbed in the glass.

(19) Costs. Table 8-23 includes cost estimates ($/ton) provided by Geosafe Corporation and are for radioactive waste only. For mixed waste, add $70 to $120 to each estimate. These figures do not include transportation costs. The EPA handbook estimates equipment mobilization and demobilization costs at $50,000 plus $50 per transport mile. Treatability testing costs must also be included and are estimated to range from $40,000 to $70,000 or more. The costs involved in vitrification are discussed in more detail in the EPA handbook (EPA 1992) .

Table 8-23
Cost Estimates

Treatment Process	Estimated Cost, $/ton	$/kg
Landfilling:		
Onsite	240-390	0.27-0.44
Off site	230-450	0.26-0.51
Chemical Stabilization:		
Onsite	215-485	0.24-0.54
Off site	200-490	0.22-0.55
Incineration:		
Onsite	370-1,310	0.41-1.47
Offsite	675-2,470	0.76-2.77
Vitrification:		
In situ	450-650	0.51-0.73
Staged	490-800	0.55-0.90

compounds that are more volatile and thus reduce incorporation efficiencies of these metals.

(d) Certain metals such as mercury and cadmium may be undesirable because of their difficulty to incorporate into the melt, their reduction of product quality, and/or because their volatility requires treatment in the off-gas system.

(e) An elaborate and costly off-gas treatment system is required because of the potential volatilization of contaminants.

(f) In joule heating, metals in the feed may cause shorting of the electrodes. The metals may sink to the bottom of the melt, concentrate there, and possibly create a conduction path that may lead to electrical shorting between the electrodes.

(g) The high cost of energy is a significant disadvantage to vitrification because the process requires large amounts of energy. A primary way in which vitrification can be used efficiently is at highly contaminated sites where the contamination is not diluted. Another factor that drives up cost is the high cost of trained operators.

(h) At present, depth limitations are a serious handicap to ISV. Currently, PNL has achieved a depth of 5 m and Geosafe has achieved a depth of 5.8 m. Sixty percent of DoD contaminated soil sites extend deeper than 5 m. If ISV could be extended to 9 m, then 90 percent of DoD sites would fall within ISV depths.

(i) Gamma radiation must be guarded against by shielding and remote operation. Beta radiation is absorbed in the glass except from the surface layer, and alpha radiation is completely absorbed in the glass.

(19) Costs. Table 8-23 includes cost estimates ($/ton) provided by Geosafe Corporation and are for radioactive waste only. For mixed waste, add $70 to $120 to each estimate. These figures do not include transportation costs. The EPA handbook estimates equipment mobilization and demobilization costs at $50,000 plus $50 per transport mile. Treatability testing costs must also be included and are estimated to range from $40,000 to $70,000 or more. The costs involved in vitrification are discussed in more detail in the EPA handbook (EPA 1992).

Table 8-23
Cost Estimates

Treatment Process	Estimated Cost, $/ton	$/kg
Landfilling:		
Onsite	**240-390**	**0.27-0.44**
Offsite	**230-450**	**0.26-0.51**
Chemical Stabilization:		
Onsite	215-485	0.24-0.54
Offsite	200-490	0.22-0.55
Incineration:		
Onsite	370-1,310	0.41-1.47
Offsite	675-2,470	0.76-2.77
Vitrification:		
In situ	450-650	0.51-0.73
Staged	490-800	0.55-0.90

Chapter 9
Final Waste Form Requirements of Low-Level Radioactive Waste

9-1. 10 CFR 61 Requirements

a. Waste characteristic requirements. Waste form requirements that must be met in order for radioactive waste to be disposed of in shallow land burial are detailed in 10 CFR 61.56. This part of the regulation is quoted in full below. The following requirements are minimum requirements for all classes of waste and are intended to facilitate handling at the disposal site and provide protection of health and safety of personnel at the disposal site.

(1) Waste must not be packaged for disposal in cardboard or fiberboard boxes.

(2) Liquid waste must be solidified or packaged in sufficient absorbent material to absorb twice the volume of the liquid.

(3) Solid waste containing liquid shall contain as little free-standing and noncorrosive liquid as is reasonably achievable, but in no case shall the liquid exceed 1 percent of the volume.

(4) Waste must not be readily capable of detonation or of explosive decomposition or reaction at normal pressures and temperatures, or of explosive reaction with water.

(5) Waste must not contain, or be capable of generating, quantities of toxic gases, vapors, or fumes harmful to persons transporting, handling, or disposing of the waste. This does not apply to radioactive gaseous waste packaged in accordance with paragraph *9-1.a(7)* of this section.

(6) Waste must not be pyrophoric. Pyrophoric materials contained in waste shall be treated, prepared, and packaged to be nonflammable.

(7) Waste in a gaseous form must be packaged at a pressure that does not exceed 1.5 atmospheres at 20 ºC. Total activity must not exceed 100 curies per container.

(8) Waste containing hazardous, biological, pathogenic, or infectious material must be treated to reduce to the maximum extent practicable the potential hazard from the nonradiological materials.

b. Stability requirements. The requirements in this section are intended to provide stability of the waste. Stability is intended to ensure that the waste does not structurally degrade and affect the overall stability of the site through slumping, collapse, or other failure of the disposal unit and thereby lead to water infiltration. Stability is also a factor in limiting exposure to an inadvertent intruder, since it provides a recognizable and nondispersible waste.

(1) Waste must have structural stability. A structurally stable waste form will generally maintain its physical dimensions and its form, under the expected disposal conditions such as weight of overburden and compaction equipment, the presence of moisture, and microbial activity, and internal factors such as radiation effects and chemical changes. Structural stability can be provided by the waste form itself, processing the waste to a stable form, or placing the waste in a disposal container or structure that provides stability after disposal.

(2) Notwithstanding the provisions in 61.56(a)(2) and (3), liquid wastes, or wastes containing liquid, must be converted into a form that contains as little free-standing and noncorrosive liquid as is reasonably achievable, but in no case shall the liquid exceed 1 percent of the volume of the waste when the waste is in a disposal container designed to ensure stability, or 0.5 percent of the volume of the waste for waste processed to a stable form.

(3) Void spaces within the waste and between the waste and its package must be reduced to the extent practicable.

9-2. NRC Requirements

a. Introduction. The NRC has issued a technical position paper on waste form requirements that was initially developed in 1983 to provide guidance to both fuel-cycle and non-fuel-cycle waste generators on waste form test methods and results acceptable to the NRC staff for implementing the 10 CFR 61 waste form requirements. This position paper has an appendix which provides special requirements for cement solidified waste. The following material is taken from the “Technical Position on Waste Form: Revision I" (NRC 1991).

b. Class A waste stability requirements. Solidified Class A waste products which are segregated from Class B and C wastes (Classes A, B, and C of LLRW are defined by 10 CFR 61 and EM 11 10-35-1) should be free-standing monoliths and have no more than

0.5 percent of the waste volume as free liquids as measured using the method described in American Nuclear Society (ANS) 55.1 (ANS 1979). Class A waste products which are not segregated from Class B and C wastes should meet the stability guidance for Class B and C wastes as provided below.

c. Class B and C waste stability requirements. The stability requirements for Class B and C solidified wastes put forth by the NRC deal with compressive strength, thermal degradation, radiation degradation, biodegradation resistance, leach testing, immersion testing, pH range, full-scale testing, and homogeneity as described below.

(1) Compressive strength. Solidified waste specimens should have compressive strengths of at least 60 psi when tested in accordance with ASTM C39 (ASTM 1979b). Compressive strength tests for bituminous products should be performed in accordance with ASTM D 1074 (ASTM 1980). Many solidification agents (such as cement) will be easily capable of meeting the 60-psi limit for properly solidified wastes. For such cases, process control parameters should be developed to achieve maximum practical compressive strengths, not simply to achieve the minimum acceptable compressive strength. Please refer to the NRC requirements for cement-solidified wastes in Section 9-2.d.

(2) Thermal degradation. Waste specimens should be resistant to thermal degradation. The heating and cooling chambers used for thermal degradation testing should conform to the description given in ASTM B553 (ASTM 1979a). Samples suitable for performing compressive strength tests in accordance with ASTM C39 (ASTM 1979b) or ASTM D1074 (ASTM 1980) should be used. Samples should be placed in the test chamber and a series of 30 thermal cycles carried out in accordance with ASTM B553. The high temperature limit should be 60 °C, and the low temperature limit should be -40 °C. Following testing, the waste specimens should have the maximum practical compressive strengths.

(3) Radiation degradation. The specimens for each proposed waste stream formulation should remain stable after being exposed to a radiation field equivalent to the maximum level of exposure expected from the proposed wastes to be solidified. Specimens for each proposed waste stream formulation should be exposed to a minimum of 10^8 rads in a gamma irradiator or equivalent. If the maximum level of exposure is expected to exceed 10^8 rads, testing should be performed at the expected maximum accumulated dose. Following irradiation, the irradiated specimens should have the maximum practical compressive strengths.

(4) Biodegradation resistance. Specimens for each proposed waste stream formulation should be tested for resistance to biodegradation in accordance with both ASTM G21 (ASTM 1970) and ASTM G22 (ASTM 1976). No indication of culture growth should be visible. Specimens should be suitable for compression testing in accordance with ASTM C39 or ASTM D 1074, as applicable. Following the biodegradation testing, specimens should have the maximum practical compressive strengths. For polymeric or bitumen products, some visible culture growth from contamination, additives, or biodegradable components on the specimen surface that does not relate to overall substrate integrity may be present. For these cases, additional testing should be performed. If culture growth is observed upon completion of the biodegradation test for polymeric or bitumen products, the test specimens should be removed from the culture and washed free of all culture and growth with water, with only light scrubbing. An organic solvent compatible with the substrate may be used to extract surface contaminants. The specimen should be air-dried at room temperature and the test repeated. Specimens should have observed culture growths rated no greater than 1 in the repeated ASTM G21 test. The specimens should have no observed growth in the repeated ASTM G22 test. Compression testing should be performed in accordance with ASTM C39 and ASTM D1074, as applicable, following the repeated G21 and G22 tests. The minimum acceptable compressive strength for bituminized waste forms is 60 psi. Compressive strengths should be established for other media. If growth is observed following the extraction procedure, longer term testing of at least 6 months should be performed to determine biodegradation rates. The Bartha-Pramer method (Bartha and Pramer 1965) is acceptable for this testing. Soils used should be representative of those at disposal facilities. Biodegradation extrapolated for full-size waste forms to 300 years should produce less than a 10-percent loss of the total carbon in the waste form.

(5) Leach testing. Leach testing should be performed for a minimum of 90 days in accordance with the procedure in ANS 16.1 (ANS 1981). Specimen sizes should be consistent with the samples prepared for the ASTM C39 or ASTM D 1074 compressive strength tests. In addition to the demineralized water test specified in the ANS 16.1, additional testing using other leachants specified in the Standard should also be performed to confirm the solidification agent's leach resistance in other leachant

media. It is preferred that the synthesized seawater leachant also be tested. In addition, it is preferable that radioactive tracers be utilized in performing the leach tests. For proposed nuclear power station waste streams, cobalt, cesium, and strontium should be used as tracers. The leachability index, as calculated in accordance with ANS 16.1, should be greater than 6.0.

(6) Immersion testing. Waste specimens should maintain maximum practical compressive strengths as tested using ASTM C39 or ASTM D 1074, following immersion for a minimum period of 90 days. Immersion testing may be performed in conjunction with leach testing.

(7) pH range. Waste specimens should have less than O.5 percent by volume of the waste specimen as free liquids, as measured using the method described in ANS 55.1 (ANS 1979). Free liquids should have a pH between 4 and 11. (For cement-solidified water, free liquids should have a minimum pH of 9.)

(8) Full-scale testing. If small, simulated laboratory size specimens are used for the above testing, test data from sections or cores of the anticipated full-scale products should be obtained to correlate the characteristics of actual size products with those of simulated laboratory size specimens. This testing may be performed on nonradioactive specimens. Correlation testing should be performed using 90-day immersion (including post-immersion compression) tests on the most conservative waste stream(s) intended for use for the particular solidification medium; i.e., the waste stream that presents the most difficulty in consistently producing a stable product. The full-scale specimens should be fabricated using solidification equipment the same as or comparable to that used for processing actual LLRW in the field.

(9) Homogeneity. Waste samples from full-scale specimens should be destructively analyzed to ensure that the product produced is homogeneous to the extent that all regions in the product can expect to have compressive strengths representative of the compressive strength as determined by testing lab-scale specimens. Full-scale specimens may be fabricated using simulated nonradioactive products; however, the specimens should be fabricated using solidification equipment that is the same as or comparable to that used in the field for actual LLRW.

d. Cement stabilization requirements.

(1) Introduction.

(a) Portland and pozzolonic cements have been observed to exhibit unique chemical and physical interactive behavior when used with certain materials and chemicals encountered in some low-level radioactive waste streams. Therefore, cement waste form qualifications will be specifically addressed. This discussion is not intended to be applied generically to all stabilization agents and is intended to provide information on an acceptable approach for demonstrating that a cement-solidified low-level radioactive waste form will possess the long-term (300-year) structural stability that is required by 10 CFR 61 for Class B and Class C wastes.

(b) Low-level radioactive waste generators/processors may perform qualification testing, as described below, to qualify recipes for a range of waste compositions (concentrations and loadings) for a given type of waste stream. It is incumbent upon the party providing 10 CFR 20.311 certification, however, to show that the composition of the waste form specimens used in the qualification testing adequately covers the range of waste compositions that will be encountered in the field. An acceptable approach to qualification testing is to perform the tests not only at the maximum waste loading but also at lower loadings (at least one), with appropriate variations in water/cement ratios and proportions of additives. It should not be necessary to perform all the qualification tests for all of the waste loadings, but adequate justifications should be provided for any omissions. Each individual waste stream should be qualified with test data obtained for that specific waste stream. In cases where two or more waste streams are combined, it should be demonstrated that the specimen compositions used in the qualification testing adequately cover the range of compositions that are intended to be stabilized in the field. This may be accomplished by performing the full series of qualification tests on the "worst-case" composition only, along with one or more tests on alternate compositions, sufficient to show that the selected "worst-case" was chosen correctly.

(2) Qualification test specimen preparation.

(a) The method used to prepare the test specimens is extremely important because the test specimens will predict the performance of the full-size waste products. Experience has shown that the method employed in mixing the ingredients can have a dramatic influence on the reactivity of the materials, the structure of the solidified waste form, and the resultant properties and characteristics of the waste form. Important parameters include the type of equipment and mixing time because they will

determine the amount of energy imparted to the ingredients used in the solidification recipe. In preparing the laboratory specimens, it should be shown by analysis and/or testing that the type of mixing equipment used, the mixing time, the speed of the mixer, etc., will, in combination, impart the same degree of mixing to the lab specimens as to the full-size product. It should also be shown that the degree of mixing is sufficient to ensure production of homogeneous waste forms.

(b) The curing conditions for small, lab-scale specimens should, to the extent practical, be the same as the conditions obtained with full-scale products. Because of the exothermic heat of the hydration reaction in cement waste forms, the interior temperature of a full-size waste form significantly elevates. To mimic this condition, it is recommended that the specimens be cured in a suitable oven for a period of time equivalent to the time required for the center-line temperature of a full-scale waste form to decrease to a near-ambient (30 ‘C or lower) temperature level.

(c) The compressive strength of hydrated cement and concrete solids increases asymptotically as the mixtures cure. Normally, the strength at 28 days approaches 75 percent or more of the peak value; however, when pozzolonic cements are used, the time required to reach peak strength may be extended. Sufficient test specimens should be prepared to determine the compressive strength increase with time to ensure that the specimens have attained greater than 75 percent of the projected peak strength prior to subjecting the remaining specimens to qualification testing.

(3) Compressive strength.

(a) For solidification agents that are easily capable of meeting the 60-psi minimum compressive strength, the waste forms should achieve maximum practical compressive strengths. Portland cement mortars are readily capable of achieving compressive strengths of 5,000 to 6,000 psi, which is approximately two orders of magnitude greater than the minimum compressive strength required to resist deformation under load in current low-level waste burial trenches. Thus, a mean compressive strength equal to or greater than 500 psi is recommended for waste form specimens cured for a minimum of 28 days.

(b) Compressive strengths of cement-stabilized waste forms should be determined in accordance with procedures described in ASTM C39 (ASTM 1979b). It is recommended that the compressive strength test specimens be right circular cylinders, 5 to 7 cm (2 to 3 in.) in diameter, with a length-to-diameter ratio of approximately 2. Because hydrated cement solids are brittle ceramic materials that fail in tension or shear rather than compression, and at regions of localized stress concentration or microstructural flaw, there tends to be considerable scatter in the strength test data, even if all processing variables are kept relatively constant. Therefore, sufficient specimens should be tested to determine the mean compressive strength and standard deviation. Because of the many variables involved, a decision regarding the specific number of specimens to be tested is left to the judgement of the waste processor/qualifier. In no case, however, should the number of as-cured compressive strength test specimens be less than ten. Compressive strength tests should be performed after the qualification test specimens have been allowed to cure for approximately 24 hr.

(4) Thermal degradation.

(a) It is important for cement-stabilized LLRW forms to be resistant to thermal degradation in order to retain structural stability. The thermal cycling test imposes a stress among the various microconstituents of the waste form and between different regions of the waste form. By cycling between the maximum and minimum temperatures called for in the test, any cracks initiated in the test specimen may propagate and eventually measurably weaken the waste form. The extent of any degradation that might occur will be a function of various factors such as the amount of cementitious material in the waste form, the bond strength between the materials present, and the morphology of the microconstituents in the waste form microstructure. Thus, the thermal cycling test challenges the structural capability of the specimens and serves as a very useful vehicle for screening out unfavorable “weak” formulations.

(b) The heating and cooling chambers used in determining the thermal cycling resistance of cement-stabilized waste forms should conform to the description given in ASTM standard B553 (ASTM 1979a). However, because that test method addresses thermal cycling of electroplated plastics, not cement-solidified waste materials, some modifications to the test procedure are necessary. Test specimens suitable for performing compressive strength tests in accordance with ASTM C39 should be used. The specimens should be tested while not in a container. A series of 30 thermal cycles should be carried out with the provision that the specimens should be allowed to come to thermal equilibrium at the high (60 ºC) and low (-40 ºC) temperature limits.

Thermal equilibrium should be confirmed by measurements of the center temperature of at least one specimen. A minimum of three specimens for each waste formulation should be subjected to the thermal cycling tests. Following the thermal cycling tests, the specimens should be visually examined and should be free of any evidence of significant cracking, spalling, or bulk disintegration. If there are no significant visible defects, the test specimens should be subjected to compression strength testing in accordance with ASTM C39 and should have mean compressive strengths that are equal to or greater than 500 psi.

(5) Radiation degradation.

(a) Since cementitious materials are not affected by gamma radiation to greater than 10^9 rads, which is considerably in excess of the test requirement of 10^8 rads, irradiation testing need not be conducted on cement-stabilized waste forms unless the following conditions exist:

The waste form contains ion exchange resins or other organic media.

The expected cumulative dose on waste forms containing other materials is greater than 10^9 rads.

Testing should be performed on specimens exposed to the following:

10^8 rads or the expected maximum dose greater than 10^8 rads for waste forms that contain ion exchange resins or other organic media.

An expected maximum dose greater than 10^9 rads for other waste forms.

In cases where irradiation testing is warranted, a minimum of three specimens should be tested for each waste formulation being qualified.

(b) Following the irradiation exposure, the specimens should be examined visually and should be free of any evidence of significant cracking, spalling, or bulk disintegration. If there are no significant visible defects, the test specimens should be subjected to compressive strength testing in accordance with ASTM C39 and should have mean compressive strengths that are equal to or greater than 500 psi (3.45 mPa).

(6) Biodegradation.

(a) As indicated in 10 CFR 61, a structurally stable waste form is one that will be relatively unaffected by microbial activity. Experience in biodegradation testing of cement-stabilized waste forms has shown that they generally do not support fungal or bacterial growth. The principal reason for this appears to be that the fungi and microbes used in the G21 and G22 (ASTM 1970, 1976) tests require a source of carbon for growth. In the absence of any carbonaceous materials in the waste stream, there is no internal food source available for culture growth. Consequently, biodegradation qualification testing for cement-stabilized waste forms need not be conducted unless the waste form contains carbonaceous material.

(b) For cement-stabilized waste forms containing carbonaceous materials, there should be no evidence of culture growth during the G21 and G22 tests. The test specimens should also be free of any evidence of significant cracking, spaling, or bulk disintegration. At least three specimens should be tested for each organic waste stream formulation. If there are no significant visible effects following the test exposures, the test specimens should be subjected to compression strength testing in accordance with ASTM C39 and should be shown to have mean compressive strengths equal to or greater than 500 psi.

(7) Leach testing.

(a) The leach testing procedure is test ANS 16.1 (ANS 1981). A test specimen is completely immersed in a measured volume of water which is changed on a prescribed schedule. Upon removal, the leachant is analyzed for the radionuclides of interest. As prescribed in the standard, a leachability index is calculated and should be greater than 6.0. The leachant specified in ANS 16.1 is deionized water. Additional testing using other leachants should also be performed to confirm the solidification agent's leach resistance in other leachant media. Synthesized seawater leachant is listed as a preferred leachant alternative. For reasons of economy, it is desirable to limit the bulk of the testing to one leachant. If it can be shown that the chosen leachant is the most aggressive one, testing with one leachant is appropriate. Sufficient preliminary testing should be conducted to identify the most aggressive leachant for each waste form formulation being qualified. An acceptable method for identifying the most aggressive leachant is to perform 24 hr or longer leaching measurements on both leachants and to use the leachant that resulted in the lowest leach indices for the remaining days of testing.

(b) The period of time specified for the leach test is a minimum of 90 days. This time period was selected as a means of determining whether there might be a change in leach mechanism with time; early leach rates are most often explained by diffusion, while other mechanisms such as erosion, dissolution, or corrosion would generally be discernible only after longer leaching times. However, any leaching that involves mechanisms such as erosion, dissolution, corrosion, or other physical or chemical phenomena would most likely be readily observed visually and through mechanical testing. Such observations would be made as part of the immersion test.

(8) Immersion testing.

(a) No standard method of immersion testing has been adopted for LLRW. Immersion testing may be performed in conduction with leach testing. Immersion testing should be performed for a minimum period of 90 days. Immersion testing should be performed in either deionized water or synthesized seawater. The immersion liquid should be selected on the basis of 24-hr or longer leach tests that identify the most aggressive immersion medium.

(b) At least three specimens should be used for each formulation being qualified. Test specimens should be cured for a minimum of 28 days prior to being immersed. Following immersion, the specimens should be examined visually and should be free of any evidence of significant cracking, spalling, or bulk disintegration. If there are no significant visible effects, the specimens should be subjected to compression strength testing in accordance with ASTM C39 and should have post-immersion mean compressive strengths that are equal to or greater than 500 psi and not less than 75 percent of the pre-immersion mean compressive strength. If the post-immersion mean compressive strength is less than 75 percent of the as-cured specimens' pre-immersion mean compressive strength, but not less than 500 psi, the immersion testing interval should be extended to a minimum of 180 days. Additional specimens should be used. For these cases, sufficient compressive strength testing should be conducted (for example, after 120, 150, and 180 days of immersion) to establish that the compressive strengths level off and do not continue to decline with time.

(c) Certain waste streams such as bead resins, chelates, filter sludges, and floor drain wastes have been found to exhibit complex relationships of cure time and immersion resistance. For these streams, additional immersion testing should be performed on specimens that have been cured in sealed containers for a minimum of 180 days. The immersion period should be for a minimum of 7 days followed by a drying period of 7 days in ambient air at a minimum temperature of 20 ‘C. After the specimens are dried, they should meet the post-immersion test visual and compressive strength criteria specified above.

(9) pH range. Waste test specimens should have less than 0.5 percent by volume of the waste volume as free liquids as measured using the method described in ANS 55.1 (ANS 1979). As cement is an alkaline material, evidence of acidic free liquids is indicative of improper waste form preparation or curing. Therefore, any free liquid from cement-stabilized waste forms should have a minimum pH of 9.

(10) Full-scale testing. It is necessary to correlate the characteristics of full-size products with those of laboratory size specimens. The correlation of full-scale product characteristics should be accomplished by performing compressive strength tests on material cured for a minimum of 28 days and 90-day immersion tests that include post-immersion compressive strength tests for the most conservative waste stream being qualified.

Chapter 10
Packaging, Transportation, and Labeling of Low-Level Radioactive Waste

10-1. Packaging

a. Class A waste packaging. Class A wastes are required to meet only the minimum requirements for waste form set forth in 10 CFR 61.56. Thus, Class A waste has been disposed of at Barnwell and Hanford in steel boxes and 200-ℓ (55-gal) drums. Solid materials such as wood and metal are disposed of without a container. Boxes and drums suitable for Class A waste can be bought or leased from a variety of vendors.

b. Class B and C waste packaging.

(1) Structural stability. In addition to the minimum requirements, Class B and C wastes are required to have structural stability. Structural stability is necessary to inhibit (a) slumping, collapse, or other failure of the disposal unit resulting from degraded wastes which could lead to water infiltration, radionuclide migration, and costly remedial care programs, and (b) radionuclide release from the waste form that might ensue due to increases in leaching that could be caused by premature disintegration of the waste form. To the extent practical, Class B and C waste forms should maintain gross physical properties and identity over a 300-year period. To ensure that Class B and C wastes will maintain stability, the following conditions should be met:

(a) The waste should be in solid form or in a container or structure that provides stability after disposal.

(b) The waste should not contain free-standing and corrosive liquids. The waste should contain only trace amounts of drainable liquid, and in no case may the volume of free liquid exceed 1 percent of the waste volume when wastes are disposed of in containers designed to provide stability, or 0.5 percent of the waste volume for solidified wastes.

(c) The waste or container should be resistant to degradation caused by radiation effects.

(d) The waste or container should be resistant to biodegradation.

(e) The waste or container should remain stable under the compressive loads inherent in the disposal environment.

(f) The waste or container should remain stable if exposed to moisture or water after disposal.

(g) The as-generated waste should be compatible with the solidification medium or container.

(h) If the container is airtight and the waste has alpha emitters, the helium gas produced could cause high pressure in the container, so relief values should be provided.

(2) High integrity containers.

(a) Introduction. An alternative to processing some Class B and C waste streams is the use of a high-integrity container (HIC). The HIC would be used to provide the long-term stability required to meet the structural stability requirements in 10 CFR 61. Use of an HIC can provide a convenient and economical means for handling, transporting, and disposing of low-level waste. The NRC, in the Revised Staff Technical Position on Waste form (NRC 1991) issued the following requirements for HICs:

The maximum allowable free liquid in an HIC should be less than 1 percent of the waste volume.

HICs should have as a design goal a minimum lifetime of 300 years.

The HIC design should consider the corrosive and chemical effects of both the waste contents and the disposal environment.

The HIC should be designed to have sufficient mechanical strength to withstand horizontal and vertical loads on the container equivalent to the depth of proposed burial assuming a cover material density of 120 lb/ft^3 (1,920 g/ℓ). The HIC should also be designed to withstand routine loads and effects from the waste contents, waste preparation, transportation, handling, and disposal site operations, such as trench compaction procedures. This mechanical design strength should be justified by conservative design analyses.

It should be demonstrated for HICs fabricated from polymeric materials that the containers will not undergo tertiary creep, creep buckling, or dutile-to-brittle failure over the design life of the containers.

The design should consider the thermal loads from processing, storage, transportation, and burial. Proposed container materials should be tested in accordance with ASTM B553 (ASTM 1979a). No significant changes in material design properties should result from this thermal cycling.

The HIC design should consider the radiation stability of the proposed container materials as well as the radiation degradation effects of the wastes. Radiation degradation testing should be performed on proposed container materials using a gamma irradiator or equivalent. No significant changes in material design properties should result following exposure to a total accumulated dose of 10^8 rads. If it is proposed to design the HIC to greater accumulated doses, testing should be performed to confirm the adequacy of the proposed materials. HIC designs using polymeric materials should also consider the effects of ultraviolet radiation. Testing should be performed on proposed materials to show that no significant changes in material design properties occur following expected ultraviolet radiation exposure.

Biodegradation testing should be performed on proposed container materials in accordance with ASTM G21 and G22 (ASTM 1970, 1976). No indication of culture growth should be visible. It is also acceptable to determine biodegradation rates using the Bartha-Pramer method. The rate of biodegradation should produce less than a 10-percent loss of the total carbon in the container materials after 300 years.

The HIC should be capable of meeting the requirements for a Type A package as specified in 49 CFR 173. Conditions that may be encountered during transport or movement are to be addressed by meeting the requirements of 10 CFR 71. The HIC and the associated lifting devices should be designed to withstand the forces applied during lifting operations. As a minimum, the container should be designed to withstand a 3-g vertical lifting load.

The HIC should be designed to avoid the collection or retention of water on its top surfaces in order to minimize accumulation of trench liquids which could result in corrosive or degrading chemical effects.

HIC closures should be designed to provide a positive seal for the design lifetime of the container. The closure should also be designed to allow inspections of the contents to be conducted without damaging the integrity of the container. Passive vent designs may be utilized if needed to relieve internal pressure. Passive vent systems should minimize the entry of moisture and the passage of waste materials from the container.

Prototype testing should be performed on the HIC.

HICs should be designed, fabricated, and used in accordance with a quality assurance program. The quality assurance program should address the following topics concerning the HIC: fabrication, testing, inspection, preparation for use, filling, storage, handling, transportation, and disposal. The quality assurance program should also address how wastes which are detrimental to HIC materials will be precluded from being placed into the container.

(b) Types of HICs. HICs can be made of polyethylene, polyethylene coated with fiberglass, stainless steel, polymer-encapsulated carbon steel, or Enviroalloy. The polyethylene HICs are usually disposed of within a concrete overpack.

(c) Scientific Ecology Group, Inc. (SEG) offers the RADLOK® HIC, which is constructed of high-density, cross-linked polyethylene and is designed to fit the cavity of the SEG transportation cask. SEG also offers a BARRIER PLUS™ package, which is a stainless steel shell with a polyethylene lining. Steel radwaste containers can be obtained from SEG. Many SEG containers can be supplied with underdrains for dewatering.

(d) Pacific Nuclear Systems' NuPac Services offers an HIC made of Enviralloy™. Enviralloy™ is a duplex alloy of Ferralium-255. The manufacturer claims that these containers are highly resistant to corrosion, are impervious to ultraviolet radiation, resist pitting, and have a design life of 500 years. The EnviraIloy™ container family consists of seven variously sized containers that provide three closure options and a 200-ℓ (55-gal)

container, a single 200-ℓ (55-gal) drum overpack, and a double 200-ℓ (55-gal) drum overpack, which have gasketed closures. The Enviralloy™ containers can only hold dewatered wastes. Pacific Nuclear also offers polyethylene HICs, which can be outfitted with dewatering systems and carbon steel liners.

(e) SEG and Pacific Nuclear were the only vendors that could be contacted that provide HICs. Others may do so and should be contacted when specific needs are determined. If containers are reused, they must be decontaminated as discussed in Section 8-3.

10-2. Transportation and Labeling

a. Transportation of radioactive waste.

(1) Regulations. The regulations that impact the transportation of radioactive waste are 49 CFR 172-177 (specifically 49 CFR 173, which contains the Hazardous Materials Regulations based on the United Nations Committee of Experts recommendations on the transport of dangerous goods), 10 CFR 71, and 10 CFR 20. The EPRI document, "Radwaste Desk Reference, Vol 2: Transportation and Disposal (EPRI 1992), " contains detailed discussions of the transportation requirements for LLRW.

(2) De minimis level. Department of Transportation (DOT) regulations define radioactive material as "any material having a specific activity greater than 0.002 uCi/gram. " Below this concentration limit, a material is not regulated as a radioactive material while in transport. NRC regulations express this same provision as an "exemption" from the 10 CFR 71 requirements.

(3) Types of radioactive packages. The principal types of packages as defined in 49 CFR are as follows:

(a) Excepted packages (also called "strong, tight packages").

(b) Type A packages.

(c) Type B packages.

(d) Fissile packages (both Type A and Type B).

These package categories are distinguished by the quantity of radioactive material. Each package category has a set of shipping and labeling requirements that are discussed in 49 CFR 173.

(4) Transportation methods. Radioactive material can be transported by ground transportation. Quadrex, SEG, and others offer tractor-trailer transportation services to clients. SEG uses a nationwide satellite communication and tracking system to be able to pinpoint the location of their drivers 24 hr a day.

(5) Transportation casks. Quadrex and NSSI offer shielded transportation casks. Casks are rated based on the quantity of radioactivity, activity concentration, or both. Cask designations are the same as package designations.

(6) Driver exposure. The dose to the driver is an extremely important concern in the shipment of radioactive wastes. The occupational dose limit was used as a basis for calculating the quantity of wastes allowed in the transportation packages. The waste must be arranged in the truck so that the driver is not overexposed.

(7) Exclusive use shipments. The term "exclusive use" is used to describe a shipment of radioactive materials in which the following conditions apply.

(a) All of the packages in the shipment must originate from a single shipper.

(b) The packages must be loaded, blocked, and braced by that same shipper.

(c) Any off-loading while enroute or at the final destination must be done by or at the direction of either the shipper or the recipient. Such off-loading must be done by persons having appropriate radiological control training.

Regulations governing exclusive-use shipments are outlined in 49 CFR 173.

(8) Radiation limits. Radiation limits are discussed in 49 CFR 173 and are summarized below in Table 10-1. The radiation limit is 200 mrem/hr at the package surface, except in the case of a closed transport vehicle where the position is fixed and there are no intermediate loadings or unloading. There are also thermal limits and contamination limits as detailed in 49 CFR 173.442 and 173.443, respectively.

Table 10-1
Radiation Limits for Waste Transportation

Location	Limits (mrem/hr)
Package surface	200
Package surface in inclosed vehicle	1,000
2 m from outer lateral surface of vehicle	10
Normal occupied area of vehicle (does not apply to private carrier personnel with radiation dosimetry)	2
Non-exclusive use carrier	TI

Note: Transport index (TI) is the radiation level at 1 m from the external surface of the package.

(9) Manifests. The following minimum information is required on manifests:

(a) Basic shipping description.

Proper shipping name (from 49 CFR 172. 101).

Hazard class (from 49 CFR 172. 101).

ID # (from 49 CFR 172),

Total quantity of material by weight or volume.

(b) NRC approval code required on shipping container.

(c) The quoted certification statement from 49 CFR 172.204.

(d) If mixed waste, hazardous waste manifests must also be utilized.

b. Labeling of waste packages.

(1) 10 CFR 61 Requirements. 10 CFR 61.57 requires each Package F waste to be clearly labeled to identify whether it is Class A waste, Class B waste, or Class C waste.

(2) DOT requirements. 49 CFR 172 requires each waste package to be labeled with:

(a) Proper shipping name.

(b) UN hazard identification number.

(c) Name/address of the consignor or consignee.

(d) Type A, Type B, DOT specification No., NRC certificate or DOE certificate identification No., as appropriate.

(e) “This side up, ” “This end up, ” or arrows, if a liquid.

(f) “RQ” if it is a “reportable quantity” as given in 49 CFR 172.

These markings do not apply to excepted packages.

(3) Radioactive labels. The three categories of radioactive labels are Radioactive-White I, Radioactive-Yellow II, Radioactive-Yellow III, in order of increasing radiation level at the surface of the package. The category of label depends primarily on the radiation levels at the surface of the package and at 1 m from the package. 49 CFR 172 contains a table which can be used to determine the proper package label category.

Chapter 11
Final Disposal of Low-Level Radioactive Waste

11-1. General Considerations for Planning

a. Introduction. The final step in the process of cleanup of a site contaminated with radioactive wastes is its transport to and placement in an engineered site for final disposal. The only method currently practiced in the United States is direct shallow land burial, which is a form of permanent storage. Other types of storage methods are in use in other countries and are planned for the United States in the future. Although it is the final step in the cleanup process, engineering requirements or limitations on the form, volume, concentration or activity level, and packaging of the waste will affect many earlier decisions relative to treatment and handling. Therefore, consideration of the location and means of final disposal should begin very early in the planning stages of any cleanup project.

b. Onsite disposal. The first decision which must be addressed is whether to dispose of the waste onsite or offsite. Some DOE facilities have existing onsite disposal facilities. If an onsite disposal is available, and if the waste is suitable for disposal at the site, this is usually the preferred option. The use of an onsite disposal facility minimizes transportation impacts and costs, minimizes safety concerns, minimizes public exposure and concern, and simplifies contracting. All aspects of onsite disposal must meet EPA standards and, on DOE sites, the conditions of DOE orders relating to disposal.

c. New onsite facility. In many cases, an onsite disposal facility is not available. In these cases, the next choice is between creating a new onsite disposal area or using an offsite commercial facility. New osite disposal facilities have been constructed at some locations within the DOE complex to handle environmental restoration generated wastes. These include the sites of the uranium mill tailings remedial action (UMTRA) program and the former uranium processing facilities at Weldon Spring and Femald. Creation of a new disposal site is a very complex and lengthy legal, administrative, and engineering project. It is unlikely to prove efficient or economical unless there are very large volumes of waste to be disposed of. If preliminary analysis indicates that transportation and disposal costs for the expected volume and activity of wastes are expected to be very high, the creation of an onsite disposal facility should be considered. In this case, experts in this field should be retained. Planning and design of disposal areas is not described in this EM.

d. Offsite disposal. In most cases, the preferred choice will be disposal in an offsite commercial facility. Not all existing facilities are available because the Low Level Waste Policy Act set guidelines on accessibility (refer to Chapter 3 for a fuller explanation). Planners and engineers involved in radioactive waste cleanup activities should familiarize themselves with the requirements and costs for disposal at all probable sites at the earliest stage in the planning process, because these requirements will control many decisions regarding treatment and packaging. Reference to technical descriptions or advertising brochures is a logical first step in this process, but the facilities themselves should be contacted early in the process, because availability of capacity, activity levels, packaging and disposal requirements and costs can change at any time. In addition, new facilities may become available or existing ones may close. NRC regulations must be met for all aspects of transport to and disposal at commercial facilities.

11-2. Commercial Offsite Facilities

At the present time (December 1996), there are three commercial facilities open in the United States. In addition, several state compacts are planning new facilities, but none is expected to open before 1996. EM 1110-35-1 contains a description of the various state compacts. Brief descriptions of the three sites follow.

a. Richland, Washington.

(1) This site is on the Hanford Nuclear Reservation 25 miles northwest of Richland, WA. It is operated by American Ecology, Inc. (P.O. Box 638, Richland, WA 99352, telephone No. (509) 377-24 11). American Ecology subleases 100 acres (202 hectares) from the State of Washington, which leases 1,000 acres (2,023 hectares) from DOE. It began operating in 1965.

(2) Among the low-level radioactive wastes permitted to be disposed of at Richland are solid or solidified materials, contaminated equipment, cleaning wastes, tools, protective clothing, gloves, and laboratory wastes.

(3) The method of disposal is shallow land burial in trenches. The average trench is about 150 ft wide, 45 ft deep, and 800 ft long. Filled trenches are marked with permanent monuments, which describe the contents, boundaries, dates of use and other pertinent information.

All waste is packaged and shipped to the site for burial in accordance with DOT requirements. The containers of waste are then placed in excavated trenches that, when completely filled, are covered by at least 8 ft (2.4 m) of soil. Due to this depth, no additional protection is required for Class C waste. The trench is then topped with gravel to prevent wind erosion.

(4) The surface layers consist of deposits of sand and silt, with zones of gravel and cobbles. The underlying rocks consist of basaltic lavas. The closest aquifer is about 330 ft (100.6 m) below the surface of the site. The 330 ft (100.6 m) of soils overlying the closest aquifer are very dry. In fact, in this arid desert climate, the net flow of moisture in the soil beneath the site is actually toward the surface. The geology, arid climate, and burial techniques all contribute to the retention of the waste materials on the Richland site.

(5) Several locations on the site and in the surrounding area are tested on a regular basis by taking periodic air, soil, water and vegetation samples. The air quality is continuously monitored during site operations. These samples are then analyzed by an independent laboratory.

(6) In addition to the Richland site, U.S. Ecology also serves as the contractor to the Southwest compact and the Central States compact. They have been granted a license by the State of California, the host state for the Southwest compact. They have submitted a license application to the State of Nebraska, the host state for the Central States compact. In addition to their LLRW business, they also operate chemical waste disposal facilities in Nevada and Texas.

(7) The Richland site has been designated as the compact site for the Northwest compact area and, under a perpetual contract, serves as the disposal site for the Rocky Mountain Compact area, but they will accept no LLRW from other states. They do accept NORM from other states. Most of its waste comes from the Pacific Northwest. It is capable of disposing of larger quantities of waste than it currently receives.

b. Barnwell, South Carolina.

(1) This site is operated by Chem-Nuclear Systems, Inc. (P.O. Box 726, Barnwell, SC 29812, telephone No. (803) 259-1781). The site is about 300 acres and has operated since 1971. It is the current compact site for the Southeastern Regional Compact. It has served most generators east of the Mississippi River in the past. The South Carolina Legislature passed a bill in 1992 allowing it to remain open until January 1, 1996 for wastes from the Southeast compact and to accept wastes from outside of the Southeast compact until June 30, 1994. It is to be replaced by a new state compact site in Wake County, NC, but the licensing process has encountered delays.

(2) Only LLRW wastes in dry, solid form are accepted for disposal. Liquids, toxic chemicals, and high-level rad-inactive waste are not accepted. Class A waste may be packaged in steel drums or wood, carbon-epoxy, or high-integrity (polyethylene) containers. Class B waste is disposed of in polyethylene containers with concrete overpacks. Class C waste is disposed of in carbon-steel containers that are surrounded by concrete. These high-integrity containers are designed to maintain their integrity for 300 years in the trench environment and are sold by Chem-Nuclear.

(3) The Class A waste consists mostly of materials that have become radioactive as a result of being exposed to radioactivity, such as lab coats, gloves, shoe covers, tools, filters, and construction materials. Class B waste is generally dewatered ion exchange resins, and Class C waste is primarily induced-activity objects such as metal control rod blades.

(4) Ninety-five percent of the volume and 10 percent of the activity of the wastes disposed of at this site are Class A waste. Class B waste comprises 4 to 4.5 percent of the volume and 30 percent of the activity. Class C waste accounts for less than 1 percent of the volume but 60 percent of the activity. Cobalt-60 is the largest contributor to the activity for all three classes of waste.

(5) Class A waste is buried in a trench that is 1,000 ft long, 100 ft wide, and 17-20 ft deep. The trenches have a French drain system along one side that collects any moisture in the trench. Waste containers are stacked in the trench in an orderly manner. However, occasional random placements of loose lumber, pallets, etc., occur. Using a 3-D computerized grid system, each shipment's location and its contents are logged. For closure, the waste packages in each section of the trench are covered with loose sand for packing, and then a cap made of clay-rich material is packed over the trench and crowned to shed water. The same system is used for the disposal of Class B waste, except that the trench is only 30 ft wide. Class C waste is disposed of in trenches that are only 10 ft wide, and a remote-operated cable is used to pull the container out of the shipping cask and into the trench in order to protect the workers from radiation exposure. The entire Class C trench is covered with

reinforced concrete for closure in order to prevent future inadvertent entry.

(6) All rainwater is channeled from the bottom of the trenches to a pond, from which it infiltrates into the ground. It is tested for radioactivity and, if too much is found, the water is diverted into another pond for treatment.

(7) Approximately 900,000 ft^3 (25,489 m^3) of waste was disposed of in 1991, which is less than the 1.2 million ft^3 (33,985 m^3) the site can accept per year. The base charge for disposal (not including transportation) is \$43/ft^3 (\$15 18/m^3) of waste, with surcharges for weight, activity, cask load, high activity, and state and federal government inspection fees. Thus, volume reduction is very important to the generator. The average charge, including concentration and activity surcharges and special handling fees, is \$200/ft^3 (\$7,000/m^3), and the average charge for a container of Class C waste is \$200,000.

c. Clive, Utah.

(1) This facility is in Tooele County, Utah, about 55 miles west of Salt Lake City and 3 miles south of 1-80 in the western Utah desert. It is operated by Envirocare of Utah, Inc. (215 South State St., Suite 1160, Salt Lake City, UT 84111, telephone No. (801) 532-1330).

(2) The Clive site began accepting NORM wastes in 1988, LLRW in 1991, and mixed wastes in 1993. It is the only commercial facility in the United States permitted to accept mixed wastes containing no more than Class A radioactive waste. It also accepts by-product, source, and special material, by-product 1 le(2) mill tailings, dried process sludges, CERCLA response action wastes, and treatment residues. It accepts no hazardous waste, except that which is a component of mixed waste.

(3) Materials may be shipped by either truck or rail. The Clive site has a proivate spur off the Union Pacific's main line. Materials may be shipped in a number of containers, including bulk transport in gondola railcars, intermodel containers, or dump trucks; or in metal boxes of various sizes, metal drums, or polyethylene bags.

(4) Unlike other sites, at Clive LLRW is placed and compacted in 12-in. lifts in a continuous cut-and-cover process. Thus, waste should not be compacted before shipping. The completed cell is entombed in a 7-ft clay radon barrier, a rock filter zone, and a coarse rock erosion barrier. There are three synthetic liners, each with a separate leachate collection system. Each customer's material is assigned a specific location within a cell. The material is then segregated and isolated to eliminate the potential for liability from another generator's waste.

11-3. Site Selection

a. Selection factors. The site to which the LLRW or mixed waste is to be shipped is based on several factors, including, but not limited to the following:

(1) Availability of a permitted site, which will accept wastes from the particular facility.

(2) Acceptability of the waste.

(3) Sampling and analysis requirements.

(4) Packaging requirements.

(5) Disposal costs.

(6) Transportation options.

(7) Transportation costs.

All of the above factors are affected by the volume, type, and activity of the LLRW wastes. Different options should be explored early in the planning process, with the final decision made only after detailed discussions with each facility about the factors listed above. For many facilities, only one disposal site may be available, because others may not accept wastes from areas outside their compact area.

b. Costs.

(1) Reliable and meaningful disposal cost data are difficult to obtain, because costs are dependent on many factors, including total volume, weight, activity level, type of packaging required, analysis fees, inspection fees, and transportation. Pricing policies of the different commercial disposal sites differ, and prices change from year to year. Sometimes volume discounts may be available. Some cost data are given in Section 11-2 b.(7) for order-of-magnitude estimating purposes only. Each situation is unique, so once all possible available disposal sites are identified, each site should be contacted and asked to quote prices for the specific types and volumes of wastes estimated to be present.

11-4. Planned Future Disposal Sites

a. Impending changes. The Northwest State Compact and the Rocky Mountain State Compact are planning to continue to use the Hanford disposal site for the foreseeable future. However, all other state compacts are planning to construct new facilities. None of the plans is far enough advanced to know the specific designs, but present indications are that none is planning to use nonengineered shallow land burial. Thus, it is certain that the general practice of LLRW disposal in the United States will change radically in the next few years. Many LLRW cleanup projects take several years to plan and implement. During that time, the status and availability of disposal sites and their rules and conditions for waste acceptance can change radically. Therefore, all engineers that are involved in LLRW projects should be aware of the current status of the applicable state compact facility and how its schedule and plans for construction and operations and rules for waste acceptance will affect their projects.

b. Other disposal options. Many different types of facilities have been proposed for LLRW disposal, both in the United States and in Europe and Asia. Some may be adopted in the United States in the future, so planners and engineers involved with LLRW disposal should be familiar with the basic concepts. However, the NRC has said in "Licensing of Alternative Methods of Disposal of Low-Level Radioactive Waste" (NRC 1986) that for the present it will focus on cementitious materials with earthen covers and will expend minimal resources on aboveground vaults or mined cavities.

(1) Deep shaft mine. Germany is planning to bury LLRW in an abandoned iron mine near Braunschweig (the Konrad mine). The mine is over a mile deep and was selected because its unusual geological situation makes it very dry. The waste would be placed in special containers in concrete chambers in the mine and backfilled with a special porous cement mixture which will allow for escape and dissipation of the gas that will be produced. Wastes which can be incinerated will be required to be, and the ashes will be required to be placed in special containers.

(2) Shallow mined cavities.

(a) Because of the difficulty of finding suitable deep geological strata and the cost of constructing and operating new deep mines, some have proposed shallower mines, usually above the water table, in stable geological strata. Sweden has adopted a version of this approach. The excavated disposal facility is 60 m deep in granite, but, instead of being above the water table, is under the floor of the Baltic Sea, about 200 m offshore near the village of Forsmark, about 100 km north of Stockholm. The facility contains four underground vaults and a silo.

(b) Each vault was created to hold a specific form of waste, and the highest-level waste is put in the silo. Low-level wastes are handled with no shielding, because they are not considered very harmful. Intermediate-level waste is handled either remotely or by a special, shielded forklift.

(c) All wastes are treated by the generators. The wastes can be in concrete or steel boxes or steel drums. The containers have to be of a type approved by the regulatory authorities. Concrete boxes are used for medium-level ion exchange resins, filter materials, and metal scrap or trash. Cement grout is used for solidification in the concrete boxes. Steel drums or boxes are used for the same type of waste, but the solidification material can be concrete or bitumen, and, since the shielding capacity of the steel is not as high as concrete, they are usually used for low-level waste. No wastes are required to be incinerated, but, if they are, the ashes are placed in a 200-ℓ steel drum. This drum is placed in a larger drum, and the void is filled with grout. Concrete tanks are used for dewatered low-level ion exchange resins. The tank is lined with a rubber sack, and no solidification matrix is used. The average cost, including the packages, for disposal at the SFR is \$4600/m^3 in 1992 dollars.

(d) Forsmark is considered an appropriate place for a radioactive waste repositorybecause the rock is of good quality, the groundwater head is very low, and, with its location under the sea, no one would be drilling for drinking water at least until the seabed rises above the water, which has been predicted to be in 1,000 years. After the facility is sealed, drainage pumping will cease, and the repository will fill with water. Thus, the barriers are constructed to prevent the movement of the groundwater out of the repository.

(3) Earth-mounded concrete bunker.

(a) A somewhat simpler and cheaper option than the deep or shallow mined cavities is the above-ground concrete bunkers, covered with earth. This technology is practiced in France and is being planned for adoption by all of the state compacts in the United States. Thus, any engineers involved in projects expected to be active past 1996 should be familiar with it.

(b) The new French disposal facility is the Centre de l'Aube, which was built to replace the Centre de la Manche, which has been in operation since 1969 and is almost full. Both facilities use the monolith technique. However, the Centre de l'Aube design is quite different from, and improves upon, the Centre de la Manche design.

(c) At Centre de l'Aube, the waste is shipped primarily by train to the nearest station and then brought by truck to the site. At the security checkpoint, the shipping manifest is checked against the cargo, and random packages are opened and checked for conformity to ANDRA (the French Waste Disposal Agency) treatment and immobilization specifications.

(d) No liquid waste is accepted at the Centre, and ANDRA has developed waste acceptance criteria that the operators must follow. The Centre has an onsite compaction and grouting facility that is used to immobilize waste when needed.

(e) The waste is then taken by truck to one of the monoliths, or disposal units. The monoliths are above--ground, concrete vaults made of 0.3-m (l-ft) thick reinforced concrete with an underground drainage system. The waste packages are removed from the truck by a manually operated overhead crane. The crane then becomes automatically controlled, and the packages are placed in the vault automatically to reduce the exposure of the crane operator and to place the containers more accurately with a 10-cm space between them. The structure is protected from rain by a movable rail-mounted building that covers the section being filled and contains the crane and crane operator.

(f) After each layer of containers is in place, it is covered with grout (between the containers and 10 cm over their tops), and, when the structure is completely filled with six layers, a concrete roof 1 m thick is poured. Then, the entire structure is sprayed with a waterproof plastic covering.

(g) When a row of four monoliths is filled and sealed, the spaces between and over the monoliths are filled with earth. A final cover composed of layers of bitumen, sand, clay, and topsoil is placed over the row. The cover is peaked in places to facilitate runoff to a surface drainage system. After closure, the site will have the appearance of a series of hills and will be landscaped to blend with the surrounding forest.

(h) The French consider this a three-barrier system (waste container, concrete vault, and top cover). Since they do consider the waste container a radiation barrier, a detailed set of specifications for each given waste form has been developed and must be followed by the generators for their waste to be accepted at Centre de l'Aube. However, there are no requirements that address the chemical composition of the waste. ANDRA does not accept responsibility for the waste until it has cleared the security checkpoint.

(i) A computerized tracking system is used at the Centre. Each container displays a sticker with a bar code that is read by a scanner during the automated placement stage. This information is stored along with the container's position in the monolith and all of the information about the container's contents. This information can be accessed by ANDRA, the Centre, or the generator who is also online.

(j) The Centre de l'Aube will operate for 30 years, until approximately 2020, but institutional control of the area will remain with ANDRA for 300 years. At that time, the area will be allowed to be used for any purpose.

(k) The development costs for Centre de l'Aube were approximately $240 million (1.2 billion francs) including design. The cost for waste disposal is $1 ,600/ m^3, or 8,000 francs/m^3, and there are no surcharges except for waste that must be treated at the site.

Chapter 12
Treatment and Disposal of Mixed Wastes

12-1. General Approaches

a. Classes of options. As described in Chapter 3, mixed wastes include both radioactive wastes and hazardous wastes. Because the laws governing handling and disposal of these two classes of wastes differ substantially, options are limited. Every reasonable effort should be made to avoid contaminating radioactive wastes with hazardous wastes, and vice versa. If mixed wastes are encountered, there are three main options, as outlined briefly below, and described in more detail in subsequent sections.

(1) Dispose of mixed wastes. Package the mixed wastes, and send them in the mixed form to a facility designed and permitted to dispose of mixed wastes. As of July, 1993, there is only one facility in the United States of this type. This is the facility at Clive, UT, operated by Envirocare of Utah, Inc. Even more limiting, this facility does not accept wastes whose radioactive level is higher than the low range of Class A wastes. In addition, this facility does not desire that mixed wastes be compacted, because of the method they use to place and cover their wastes (12-in. (0.3-m) lifts).

(2) Treat hazardous component. The second type of option is to treat the mixed wastes, using an appropriate method for treating the particular hazardous wastes that are present to such a degree that they are no longer legally defined as hazardous. Methods for treating hazardous wastes are described in detail in EM 1110-1-502 (30 April 1994), "Technical Guidelines for Hazardous and Toxic Waste Treatment and Cleanup Activities," and are outlined briefly later in this chapter. The remaining low-level radioactive wastes can then be appropriately packaged and disposed of in a suitable onsite facility or in one of the available commercial or state compact facilities. As of late 1993, three commercial facilities were open, two of which were serving as state compact facilities. They were Barnwell, SC, which serves the Southeastern compact facility and Hanford, WA, which will continue to serve as the Northwestern compact facility for the foreseeable future. The third facility is Clive, UT. No additional compact facilities were open as of 1993.

(3) Separate wastes. The third option is to separate the radioactive waste components from the hazardous waste components, using an appropriate separation technique. The hazardous waste components can then be treated until no longer legally defined as hazardous or can be disposed of in a permitted hazardous waste facility. The low-level radioactive waste component can then be appropriately packaged and disposed of in a suitable onsite facility or in one of the available commercial or state compact facilities.

b. Factors to consider. The selection of the option to be used requires consideration of many factors, including, but not limited to, those listed below.

(1) Technical feasibility.

(2) Availability of appropriate disposal facility.

(3) Volume of wastes.

(4) Radioactivity level and type.

(5) Type and concentration of hazardous wastes.

(6) Degree of mixing.

(7) Distance to suitable disposal facilities, for each type.

(8) Transportation costs per unit volume, for each type.

(9) Disposal costs per unit volume, for each type.

(10) Treatment costs.

(11) Availability of suitable treatment techniques.

(12) Availability of suitable separation techniques.

(13) The additional need for RCRA treatment, storage, and disposal permits if mixed wastes or separate hazardous wastes are also involved.

c. Influence of factors. Every situation is unique, and there are innumerable specific combinations of the factors which will dictate a unique solution to each waste situation. However, certain general principles will hold in all cases. A few are illustrated below.

(1) If the volume of mixed wastes is small, and the radioactivity level is low enough to qualify for disposal at the mixed waste facility at Clive, UT, the disposal costs for the mixed wastes may be lower than the costs of separating or treating the hazardous waste component,

plus the separate disposal costs for the radioactive waste component and any hazardous waste residue.

(2) If the volume of mixed wastes is large, the disposal costs plus the transportation costs may be very high, and more effort should be made to select and design a suitable efficient separation technique or treatment technique for the hazardous wastes.

(3) If the volume of wastes is very large, and disposal costs and transportation costs to Envirocare are very large, or if the radioactivity level is higher than that acceptable at that facility, or at any other commercial facility available at the time, consideration must be given to the construction of a suitable onsite facility, if the site is a DOE site. DOD wastes must go to a properly permitted onsite facility, state compact facility, commercial facility, or federal facility.

12-2. Approach to Treatment Technique Selection

a. Introduction. There is obviously a virtually unlimited number of hazardous contaminants and combinations of contaminants that can be found at a hazardous waste site. Each site is unique and it will require good engineering judgement to select the type or types of treatment technology that will result in cost-effective remediation. A detailed discussion of the various situations that can be encountered in the field is beyond the scope of this report. Three situations have been included that could realistically be encountered and the types of treatment that could be utilized in remediation as examples of the thought process that can be practiced in a real-world situation. In practice, a proper field investigation and feasibility study (RI/FS) should be prepared, reviewed, and approved before actual remediation work is initiated.

b. Metal shavings and organic solvents.

(1) As in example 1, consider a site that is the result of discarding in the same location non-pyrophoric, radioactive metal shavings from a milling operation and organic solvents. The metal shavings meet the criteria to be an LLRW. Chemical analysis shows the site to contain at least two solvents that are listed by the EPA as hazardous wastes. This site is by definition a mixed waste site. Analysis shows the level of radiation to be too high to be acceptable at the Envirocare site. Therefore, no permitted site can accept the contaminated soil resulting from the improper disposal of this waste material.

(2) The metal shavings are large enough to separate from the majority of the contaminated soil by multiple screening operations. When the metal shavings are separated, the shavings portion must be analyzed to be certain it does not contain any of the listed hazardous solvents. If it does not, the shavings can be disposed of at an LLRW site. If listed solvents are present, removal can be accomplished by washing the shavings with a material that will selectively remove the hazardous solvent and leave only an LLRW. If washed, the washing solution containing the solvents can be treated by adsorption in a mobile adsorption unit or by biological treatment if an appropriate treatment plant is available.

(3) The portion of the original contaminated material that is now free of radioactive material can be handled as a normal hazardous waste. This material may be sent to a permitted hazardous waste treatment and disposal site, or it could be treated in a mobile incinerator onsite. An onsite permanent solution to the original problem is preferable to shipping the material to a permitted burial site. The relative costs associated with these alternatives would play a major role in the final decisions with regard to selection of a remediation method.

c. Trash wastes and organic solvents. For the second example of a mixed waste, a situation that is more likely to occur is considered. In this second case, a site is contaminated with 55-gal (200-1) drums of protective clothing, cleaning rags, and floor sweepings from the normal operation of a facility where radioactive material is produced and/or handled. The material contains enough radionuclides to be by definition an LLRW, and it also contains some amount of listed organic solvents. Thus, it is also by definition a hazardous waste. The radioactive waste substances in this mix are dispersed in a random manner. It is normal that these radioactive wastes are contained in some way in a nonradioactive medium. Their separation is not normally practical. This waste cannot be accepted at an LLRW site because of the solvents. The waste could be incinerated to destroy the organic solvents. There is one Toxic Substance Control Act (TSCA) incinerator, at Oak Ridge, TN, that is permitted to bum mixed wastes. However, no RCRA permits now allow the introduction of radioactive waste into the combustion unit. The only practical solution to this waste problem is shipment to the Envirocare facility at Clive, UT, for disposal.

d. Lead shielding. The third example is a storage area containing lead plates that have been used as a shielding material during the handling of radioactive

material. The lead plates can have a level of radioactivity that cause them to be LLRW. The lead itself (as are most heavy metals) is toxic and must be handled as a hazardous waste. In general, only the surface of the lead plates would be radioactive. Potential methods to remove the radioactive part of the lead include acid leaching and scrubbing of the surface or sandblasting. If enough can be removed, the remainder can be disposed of as a hazardous waste or recycled. The radioactive lead removed is still a mixed waste, but the volume has been considerably reduced, making long-term storage more practical and economical. The lead can be stored and given adequate time for decay to occur. After the radioactivity has diminished to an acceptable level, the lead can be recycled or disposed of as a hazardous waste.

12-3. Techniques for Treating Hazardous Waste Components

There are many techniques available for treating the hazardous waste component of mixed wastes. Several general books are available which cover numerous techniques, and there are separate books on several techniques. In addition, the periodical literature should be searched for up-to-date design information. EM 1110-1-502 gives basic information on process descriptions, advantages and disadvantages, data requirements, and design criteria for over two dozen treatment techniques. The EM should be consulted for detailed preliminary information, but each process, and its advantages and disadvantages, is briefly outlined in the following sections.

a. Air stripping. Air stripping removes volatile contaminants from an aqueous waste stream by passing air through the waste. Either a stripping lagoon or a packed column is used to accomplish this process. Air and steam stripping have been used to remove volatile organic compounds such as phenol, vinyl chloride, etc., and compounds with relatively high vapor pressure and low volubility such as chlorinated hydrocarbons. Removal efficiencies in the 90- to 99-percent range have been accomplished with contaminants such as ammonia and trichloroethylene. Advantages and disadvantages of air stripping are summarized in Table 12-1.

b. Biological treatment. The major objectives of biological treatment are to reduce the dissolved organic content, to remove heavy metals, and to coagulate and remove colloidal solids. The major treatment effects are caused by incorporation of these materials into microorganisms' tissues. The microorganisms can then either be attached to media such as in trickling filters or on rotating biological contractors, or they can be settled out and discarded or perhaps even recycled. There are many different biological treatment processes, grouped generally into suspended growth (such as activated sludge) and attached growth (such as trickling filters), or into aerobic methods or anaerobic methods. Advantages and disadvantages of biological treatment must be examined on a system-by-system basis. Advantages and disadvantages of trickling filters versus rotating disks versus activated sludge are given in EM 1110-1-502. Aerated lagoons can also be considered in a comparison of this method and are included in the above reference. Aerated lagoons generally are easy to operate, but they require a great deal of land space. Since aerated lagoons may have the most potential of dealing with mixed wastes at DOE and DoD facilities, the advantages and disadvantages of this particular approach are listed in Table 12-2.

Table 12-1
Advantages/Disadvantages of Air Stripping

Advantages	Disadvantages
Can reduce levels of volatiles by over 90 percent	Cost-prohibitive to operate at temperatures below freezing
Process is relatively independent of volatile concentration	Sensitive to pH, temperature, and fluxes in hydraulic load
Can reduce TCE concentrations by 99 percent	May pose potential air pollution problems requiring permitting, recovery, and treatment if hazardous volatile organic compounds are present in waste stream

c. Carbon adsorption. Activated carbon, granular or powdered, when contacted with water containing organic material, will remove these compounds selectively by a combination of adsorption of the less polar molecules, filtration of the larger particles and partial deposition of colloidal material on the exterior surface of the activated carbon. Adsorption results from the forces of attraction between the surface of a particle and the soluble organic materials that contact the particle. The most efficient and practical use of activated carbon has been in fixed beds of granular activated carbon. The suitability of using activated carbon for removal of a specific solute depends upon its molecular weight, structure, and volubility. Activated carbon has been proven effective in the removal of a variety of chlorinated

Table 12-2
Advantages/Disadvantages of Stabilization Ponds and Aerated Lagoons

Advantages	Disadvantages
Operating costs are low compared with other biological treatment methods	Tolerate low-strength wastes only
Cost-efficient treatment for polishing effluent	Intolerant of suspended solids and metals
Waste stabilization ponds require minimal energy	Require large land areas
	Performance markedly affected by temperature, and treatment method is not suitable for freezing temperatures
	System has limited flexibility
	Volatile gases may be emitted from processes

hydrocarbons, organic phosphorus, carbonates, PCBS, phenols, and benzenes. Specific hazardous organics that are effectively removed include aldrin, dieldrin, endrin, DDD, DDE, DDT, toxaphene, and 2-arochlors. Carbon systems that are very mobile have been successfully used for several years for either the continuous treatment or batch treatment of material that requires the removal of specific solutes. Advantages and disadvantages of carbon adsorption are summarized in Table 12-3.

d. Resin adsorption. Resin adsorption is a process for the removal of organic chemicals from liquid waste streams. It is somewhat similar to adsorption of activated carbon. Whereas carbon must be thermally regenerated, the resins are either chemically regenerated through the use of caustic steam or organic solvents. A major reason for using resin adsorption is that a specific resin can be selected that will selectively adsorb only those molecules that are to be removed from the mixture. Polymeric absorbents have been used to remove and recover a variety of toxic organic chemicals including chlorinated pesticides, phenols, aliphatic chlorinated hydrocarbons, and aromatics (including benzene, toluene, and xylene). Advantages and disadvantages of resin adsorption are summarized in Table 12-4.

e. Chemical oxidation. Oxidation reactions are one of the most important types of chemical reactions which engineers deal with. They are involved in a wide range of laboratory analyses, as well as water and wastewater treatment. Chemical oxidation is a process in which the oxidation state of a substance is increased. Conversely, chemical reduction is a process in which the oxidation state is reduced. Because of the cost involved, oxidation reactions are usually carried out for the removal of or to change the oxidation state of a specific compound. Oxidation is also used to cleave organic molecules to change and/or detoxify them, such as to make a waste either suitable for some other form of treatment such as biological treatment or in some cases to change the valence of a

Table 12-3
Advantages/Disadvantages of Carbon Adsorption

Advantages	Disadvantages
High flexibility in operation and design	Intolerant of high suspended solids levels
Suitable for treatment of a wide range of organics that do not respond to biological treatment	Carbon can be "poisoned" by high heavy metals concentrations which will affect organic adsorption
Has high adsorption potential for some highly hazardous inorganic (e.g., Cr, Cn)	Requires pretreatment for oil and grease removal where concentrations are greater than 10 mg/ℓ (10 ppm)
Tolerant of some fluctuations in concentrations and flow	Not suitable for removal of low molecular weight organics, highly soluble or highly ionized organics
	Limited to wastes with less than 10,000 mg/ℓ (10,000 ppm) organics
	O&M costs are high

Table 12-4
Advantages/Disadvantages of Resin Adsorption

Advantages	Disadvantages
Resin can be designed for selective adsorption	Resin costs are higher than carbon
Leakage rates are much lower than for carbon	Resin cannot tolerate strong oxidizing agents
Regeneration is accomplished in situ with solvents	Usually have smaller system capacity than carbon
Resin can tolerate high levels of inorganic solvents	Pretreatment such as filtering is often necessary
Resin can operate over a wide pH range	Volume of solvent needed for backwash may be significant

specific metal to a less toxic form and thereby render the mixture potentially nonhazardous. The oxidizers most often used in a wastewater application include the following: (a) oxygen or air (21 percent oxygen); (b) ozone; (c) chlorine and hypochlorites; (d) chlorine dioxide; (e) hydrogen peroxide; and (f) potassium permanganate. Advantages and disadvantages of chemical oxidation are summarized in Table 12-5.

Table 12-5
Advantages/Disadvantages of Chemical Oxidation

Advantages	Disadvantages
Effective on dilute waste streams	Higher treatment costs than comparable biological treatment systems
Can be used to detoxify and improve biodegradability and adsorption characteristics	Some organics are resistant to most oxidants
	Inorganic such as chloride will interfere with the oxidation reaction
	Partial oxidation may generate toxic compounds

f. Chemical reduction. The most likely use of chemical reduction is to act upon heavy metals in a solution to reduce them to their elemental form for potential recycling, or to convert certain metals to a less toxic oxidation state. The metal most often treated with reduction techniques is chromium, which often is present in a waste solution or mixed solution as chromium (VI) which is a very toxic material. In the reduced state, chromium (III), the metal is much less hazardous. Also, in the reduced state, it can be precipitated for removal. The most widespread use of chemical reduction is to control hexavalent chromium in the plating and tanning industries and to remove mercury from caustic/chlorine electrolysis cell effluents. It is not unusual to encounter levels of mercury in soils or wastewaters that also contain low levels of radioactive material on large DOE sites. If this mercury can be removed from the solution, then the solution may well become non-hazardous and can be treated simply as a radioactive waste without having to be classified as a mixed waste. The next most likely application of a reduction process is in the removal of residuals of oxidants, such as ozone, chlorine, chlorine dioxide, hydrogen peroxide, etc. Also, any off-gases from ozone generation and application require reduction before discharge to the atmosphere. Advantages and disadvantages of reduction reactions are summarized in Table 12-6.

Table 12-6
Advantages/Disadvantages of Reduction Reactions

Advantages	Disadvantages
Reduction can reduce the toxicity of some material	Reduction reactions usually require pH adjustment as pretreatment
Reduction can provide favorable conditions for precipitation of some metals	Can cause the precipitation of some metals

g. Precipitation.

(1) Precipitation is a widely used (in industrial practice), relatively low-cost, physical-chemical technique in which the chemical equilibrium of a waste is changed to reduce the volubility of the undesirable components. These undesirable components settle out of solution as a solid phase, generally in the form of small colloidal particles. These solids may then be removed by any one of several solids removal techniques such as sedimentation, filtration, vacuum filtration, or centrifugation. Precipitation is most often employed to remove dissolved heavy metals. It can also be utilized to remove long chain or high molecular weight organic materials.

(2) Precipitation is generally initiated by adding chemicals that will either react with the hazardous constituent to form a much less soluble compound or the chemical may be one that will cause a shift in volubility equilibrium, reducing the volubility of the hazardous substance. Chemicals often used to induce precipitation include sodium hydroxide, sodium sulfide, hydrated lime, iron sulfide, ferric sulfate, phosphate salts, and alum. Normally, precipitation processes include the following steps: the rapid mixing of the precipitating chemicals with the wastewater, followed by slow mixing of the mixture in a flocculation tank, followed by sedimentation of the solids in a clarification tank. In some situations, it might be more desirable to use filtration or centrifugation to remove the solids from the liquid phase as opposed to the use of sedimentation. The advantages and disadvantages of precipitation are summarized in Table 12-7.

h. Flocculation and sedimentation.

(1) Flocculation and sedimentation are well-developed wastewater treatment processes currently being applied to the full-scale treatment of many industrial wastewaters containing particulate and/or soluble heavy metals. The overall process of coagulation and flocculation encompasses many different mechanisms that allow

Table 12-7
Advantages/Disadvantages of Precipitation

Advantages	Disadvantages
Relatively low-cost treatment process	High total dissolved solids may reduce performance
Widely used process and understood by many design engineers	Chelating agents present in the mixture can drastically reduce performance
Generally predictable process, and the extent of removal is dictated by the physics of the system	The desired level of removal to render the mixture non-hazardous may not be completely achievable by precipitation alone

small particles to coalesce into larger, more settleable particles. In general, these mechanisms involve particle-charged phenomena and surface chemistry and the inducement to form more readily settleable compounds. Coagulation is the process of adding chemicals to destroy or reduce the stability of a colloidal suspension, and flocculation is the process of slow-stirring *to* promote the growth of colloids to enhance sedimentation. Typical chemicals used in the flocculation process include lime, alum, various iron salts, and organic flocculants, generally referred to as "polyelectrolytes. " Polyelectrolytes are often used in conjunction with one of the inorganic coagulant such as alum, or they may be used as the primary coagulating agent.

(2) Sedimentation is the physical process whereby particles suspended in a liquid are caused to settle by the forces of gravity which act on both the suspended particles and the liquid itself. Sedimentation in general requires a container of adequate size to provide sufficient time and sufficient nonturbulent conditions to allow the particles to settle. Once the particles settle, they are physically removed from the bottom of the settling container. Flocculation and sedimentation are most common at hazardous waste sites for the following purposes: (a) to remove suspended solids from surface water runoff, (b) to remove soluble and insoluble toxic metals, and (c) to remove insoluble inorganic. Advantages and disadvantages of flocculation and sedimentation as applied to hazardous waste sites are summarized in Table 12-8.

i. Oil-water separation. Oil-water separators may be of several different types that either utilize gravity or mechanical acceleration to separate the oil from the water. Gravity separators are most commonly used and generally consist of a settling chamber or a settling basin that allows oil to separate from a quiescent solution and

Table 12-8
Advantages/Disadvantages of Flocculation and Sedimentation As Applied to Hazardous Waste Sites

Advantages	Disadvantages
Can be economically applied to very large volumes of leachate or groundwater	Often yields incomplete removal of many hazardous compounds
Widely used, equipment is relatively simple	Large quantities of hazardous sludges may be generated
Very low energy consumption	Equipment may be difficult to obtain for flows of less than 37.9 m^3/day (-10,000 gpd)
No upper limit to concentrations that can be treated	Because of continually changing leachate quality, required dosages of coagulants will continuously change

rise to the surface. Such separators generally contain a baffle system and an oil-skimming device that prevents the loss of the oil to the effluent while continuously removing the surface oil. A holding basin, generally provided to collect the surface oil, will hold it until the oil can be disposed of in an appropriate manner. This type of gravity separator has application for the removal of oil from quiescent solutions where the concentration of oil is relatively high. Such separators are not intended for removal of oil in concentrations in the low parts per million level. A membrane filter, centrifugation, carbon absorption, or chemical coagulation may be utilized to remove low concentrations of oil. When oil is removed from a quiescent solution that contains both radioactive and hazardous constituents, oftentimes the effluent may be only radioactive if the oil separation removes both the oil and the hazardous components. These types of mixtures can be encountered as a result of washing down floors and equipment, compressor blow-down, and spillage. Gravity separators are generally used as a pretreatment step before additional treatment is provided to the waste. Advantages and disadvantages of oil-water separators are summarized in Table 12-9.

j. Dissolved air flotation. Flotation is a process used to separate solids from liquids. Separation is induced by introducing fine gas bubbles into the system. Air flotation systems will be classified as dispersed air flotation or dissolved air flotation. Most systems will be of the dissolved air flotation type. Dissolved air flotation can either be accomplished through pressure flotation or

Table 12-9
Advantages/Disadvantages of Oil/Water Separators

Advantages	Disadvantages
Provide excellent gross oil removal	Cannot treat emulsified oil or oil droplets smaller than 0.015 cm
Proven, inexpensive technology	Separated oil requires disposal and water phase may require further treatment
Variety of proprietary units are readily available	Short-circuiting may be a problem
	Sensitive to shock loadings

vacuum flotation. Pressure flotation involves air being dissolved into the wastewater under elevated pressures and later released at atmospheric pressure. Vacuum flotation consists of applying a vacuum to wastewater aerated at atmospheric pressure. To design a system, the bench scale studies and pilot plant studies would have to be performed to determine optimum design parameters. In general, flotation is used as a clarification process to remove suspended solids and as a thickening process to concentrate various types of sludges. In industrial practice, with wastes containing total suspended solids and oil and grease levels up to 900 mg/ℓ, removal efficiency of 90 percent has been recorded. Advantages and disadvantages of dissolved air flotation are summarized in Table 12-10.

Table 12-10
Advantages/Disadvantages of Dissolved Air Flotation

Advantages	Disadvantages
Requires very little land area	Only effective on particles with densities near that of water
Well-documented and available technology	Varying influent will affect performance
Air released in unit unlikely to strip volatile organics	Sludge generated will require disposal

k. Reverse osmosis. Reverse osmosis removes contaminates from quiescent solutions by passing streams at high pressure through a semipermeable membrane. At sufficiently high pressure, usually in the range of 1,378 to 2,756 kPa (200 to 400 psi), essentially pure water passes out through the membrane, leaving a more concentrated waste stream. As the waste stream becomes more concentrated and the osmotic pressure increases, it consequently requires additional external pressure to maintain the flow in the proper direction. The most critical part of reverse osmosis is the selection of the semipermeable membrane itself. One of the difficulties with reverse osmosis membranes is the susceptibility to fouling by film-forming organics or insoluble salts. The process has great application in removing very low levels of contaminants to result in the production of an effluent which is no longer a mixed waste because the hazardous component has been removed. Advantages and disadvantages of reverse osmosis are summarized in Table 12-11.

Table 12-11
Advantages/Disadvantages of Reverse Osmosis

Advantages	Disadvantages
Capable of high salt rejection	Requires high operating pressure and extensive pretreatment
Produces high purity solvent	Subject to membrane fouling and compression
Applicable to small installations	Cannot be used for fractionation
Provides for water conservation and use	Proportion of reject water may be too high to be acceptable

l. Solidification /stabilization. Solidification/stabilization technology uses physical and chemical processes to produce chemically stable solids with improved contaminant containment and handling characteristics. This treatment process eliminates free liquid and reduces the risk of spillage or escape of contaminants in any liquid phase. This process is discussed in more detail in Chapter 8 of this manual.

Appendix A
References

A-1. References

ER 385-1-80
Radiation Protection

ER 385-1-92
Safety and Occupational Health Document Requirements for Hazardous, Toxic, and Radioactive Waste (HTRW) and Ordance and Explosive Waste (OEW) Activities

ER 1110-1-263
Chemical Data Quality Management for Hazardous Waste Remedial Activities

EM 385-1-1
Safety and Health Requirements Manual, ENG Form 5044-R

ER 385-1-80
Radiation Protection Manual

EM 1110-1-502
Technical Guidelines for Hazardous and Toxic Waste Treatment and Cleanup Activities

EM 1110-2-5025
Dredging and Dredged Material Disposal

EM 1110-35-1
Management Guidelines for Low-Level Radioactive (LLW) and Mixed Waste (MW) Site Remediation (Draft, 1992)

American Nuclear Society 1979
American Nuclear Society. 1979. "American National Standard for Solid Radioactive Waste Processing Systems for Light Water Cooled Reactor Plants," ANS 55.1.

American Nuclear Society 1981
American Nuclear Society. 1981. "Measurement of the Leachability of Solidified Low-Level Radioactive Wastes," ANS 16.1, Draft Standard.

American Public Health Association 1976
American Public Health Association. 1976.
"Standard Methods for the Examination of Water and Wastewater," published with the American Water Works Association and Water Pollution Control Federation, Washington, DC.

American Society for Testing and Materials 1970
American Society for Testing and Materials. 1970. "Determining Resistance of Synthetic Polymeric Materials to Fungi," ASTM G21.

American Society for Testing and Materials 1976
American Society for Testing and Materials. 1976. "Determining Resistance of Plastics to Bacteria," ASTM G22.

American Society for Testing and Materials 1979a
American Society for Testing and Materials. 1979a. "Thermal Cycling of Electroplated Plastics," ASTM B553 .

American Society for Testing and Materials 1979b
American Society for Testing and Materials. 1979b. "Compressive Strength of Cylindrical Concrete Specimens," ASTM C39.

American Society for Testing and Materials 1980
American Society for Testing and Materials. 1980. "Compression Strength of Bituminous Mixtures," ASTM D1074.

Bartha and Pramer 1965
Bartha, R., and Pramer, D. 1965. "Features of a Flask and Method for Measuring the Persistence and Biological Effects of Pesticides in Soils, " Soil Science 100 (l), pp. 68-70.

Bradbury et al. 1992
Bradbury, et al. 1992. "Mixed Waste Soil Washing using Environmentally Benign Chemical Solvents," Waste *Management '92*, Vol. 2.

Department of Energy 1988
Department of Energy. 1988. "Low-Level Radioactive Waste Volume Reduction and Stabilization Technologies Resource Manual," DOE/LLW-76T, National Low-Level Radioactive Waste Management Program, 1988 (Dee).

Department of Energy 1991
Department of Energy. 1991. "Integrated Data Base for 1991: U.S. Spent Fuel and Radioactive Waste Inventories, Projections, and Characteristics," DOE/RW-0006, Revision 7, U.S. Department of Energy, Washington, DC.

Department of Energy 1993
Department of Energy. 1993. "Interim Mixed Waste Inventory Report: Waste Streams, Treatment Capacities, and Technologies," DOE/NBM-l 100, Vol I-VI, Office of Environmental Restoration and Waste Management, Washington, DC.

Electric Power Research Institute 1991
Electric Power Research Institute. 1991. "Radwaste Desk Reference: Vol. 1, Dry Active Waste, " Prepared by Evergreen Imovations, Inc., Right Angle Industries, Analytical Resources Inc., and General Energy Systems, Palo Alto, California, 1991 (Jun).

Electric Power Research Institute 1992
Electric Power Research Institute. 1992. "Radwaste Desk Reference: Vol.2, Transportation and Disposal," Prepared by Evergreen Innovations, Inc., Right Angle Industries, Analytical Resources Inc., and General Energy Systems, Palo Alto, California, 1992 (Jul).

Environmental Protection Agency 1988
Environmental Protection Agency. 1988. "Low-Level and NARM Radioactive Wastes: Draft Enviromnental Impact Statement for Proposed Rules, Background Information Document," Vol. 1, EPA 520/1-87-012-1, Washington, DC.

Environmental Protection Agency 1991
Environmental Protection Agency. 1991. "Risk Assessment Guidance for Superfund: Vol. 1, Human Health Evaluation Manual," Interim, U.S. Environmental Protection Agency, Washington, DC.

Environmental Protection Agency 1992a
Enviromnental Protection Agency. 1992a. "Handbook: Vitrification Technologies for Treatment of Hazardous and Radioactive Waste," EPA/625/R-92/002, Office of Research and Development, U.S. Environmental Protection Agency, Washington, DC.

Environmental Protection Agency 1992b
Environmental Protection Agency. 1992b. "Radioactive Site Remediation Technologies Seminar," EPA/540/K92/001, Office of Research and Development, U.S. Environmental Protection Agency, 1992 (Jun).

Environmental Protection Agency 1993
Environmental Protection Agency. 1993. "Handbook: Approaches for the Remediation of Federal Facility Sites Contaminated with Explosive or Radioactive Wastes, " EPA/625/R-9310 13, Office of Research and Development, U.S. Environmental Protection Agency, 1993 (Sep).

Esposito et al. 1987
Esposito, et al. 1987. *Decontamination Techniques for Buildings, Structures, and Equipment,* Pollution Technology Review 142, Noyes Data Corp., New Jersey.

Gershey et al. 1990
Gershey, E. L., et al. 1990. *Low-Level Radioactive Waste: From Cradle to Grave,* Van Nostrand Reinhold, New York.

Idaho National Engineering Laboratory
Idaho National Engineering Laboratory. "Quantities and Characteristics of the Contact-Handled Low-Level Mixed Waste Streams for the DOE Complex."

International Atomic Energy Agency 1983
International Atomic Energy Agency. 1983. *Conditioning of Low and Intermediate Level Radioactive Wastes,* Technical Reports Series No. 222, Vienna, Austria.

International Commission on Radiation Protection 1990
International Commission on Radiation Protection. 1990. " 1990 Recommendations of the International Commission on Radiation Protection," ICRP 60, Pergamon Press.

Lamarsh 1983
Lamarsh, J. R. 1983. *Introduction to Nuclear Engineering,* 2nd Ed., Addison-Wesley Publishing Co., Massachusetts.

Nuclear Regulatory Commission 1986
Nuclear Regulatory Commission. 1986. "Licensing of Alternative Methods of Disposal of Low-Level Radioactive Waste," Branch Technical Position, NUREG-1241, U.S. Nuclear Regulatory Commission, Low-Level Waste Licensing Branch, 1986 (Dee), Washington, DC.

Nuclear Regulatory Commission 1991
Nuclear Regulatory Commission. 1991. "Technical Position on Waste Form: Revision 1," Office of Nuclear Material Safety and Safeguards, U.S. Nuclear Regulatory Commission, 1991 (Jan).

Nuclear Regulatory Commission-Environmental Protection Agency 1987
Nuclear Regulatory Commission-Environmental Protection Agency. 1987. "Guidance on the Definition and Identification of Commercial Mixed Low-Level Radioactive and Hazardous Waste and Answers to Anticipated Questions," 1987 (Jan), Washington, DC.

Stewart 1985
Stewart, D. C. 1985. *Data for Radioactive Waste Management and Nuclear Applications,* John Wiley and Sons, Inc., New York.

A-2. Related Publications

Artates 1994
Artates, L. M. 1994. "Designing a Solidification/ Stabilization Process for Fine Powder Mixed Radioactive Waste," Vanderbilt University, Nashville, Tennessee.

American Society for Testing and Materials 1992
American Society for Testing and Materials. 1992. "Slurry Walls: Design, Construction, and Quality Control," ASTM 1129.

Barth et al. 1990
Barth, E. F., et rd. 1990. *Stabilization and Solidification of Hazardous Wastes,* Pollution Technology Review 189, Noyes Data Co., New Jersey.

Bernardi, Slocum, and Hoeft 1992
Bemardi, R. T., Slocum, R. E., and Hoeft, G. L. 1992. "Application of Advanced Radiographic Imaging Techniques for Characterizing Low Level Nuclear Waste," *Waste Management '92,* Vol. **2,** pp. 1833-1840.

Budnitz et al. 1983
Budnitz, et al. 1983. *Instrumentation for Environmental Monitoring: Volume 1, Radiation,* 2nd ed., Lawrence Berkeley Laboratory Environmental Instrumentation Survey, John Wiley and Sons, New York.

Burns 1988
Bums, M. E. 1988. *Low-Level Radioactive Waste Regulation - Science, Politics, and Fear,* Lewis Publishers, Inc.

Cember 1983
Cember, H. 1983. *Introduction to Health Physics.* Pergarnon Press, New York.

Conner 1990
Conner, J. R. 1990. *Chemical Fixation and Solidification of Hazardous Wastes,* Van Nostrand Reinhold, New York.

Darnell 1992
Darnell, G. R. **1992.** "Sulphur Polymer Cement, a Solidification and Stabilization Agent for Hazardous and Radioactive Wastes," Presented at the I and EC Special Symposium, American Chemical Society, Atlanta, Georgia, 21-23 September 1992.

Department of the Army 1993
Department of the Army. 1993. "Technical Applications of Environmental Requirements," PROSPECT Course, 1993 (Jul), U.S. Army Corps of Engineers, Washington, DC.

Freeze and Cherry 1979
Freeze, R. A., and Cherry, J. A. 1979. *Groundwater,* Prentice-Hall, Inc., Englewood Cliffs, New Jersey.

Glasstone 1967
Glasstone, S. 1967. *Sourcebook on Atomic Energy,* D. Van Nostrand Company, Inc., New Jersey.

Hannye 1988
Hannye, T. 1988. "Solidification/Stabilization Manual: A User Friendly Guide, " Vanderbilt University, Department of Energy Internship, FUSRAP Project, Nashville, Tennessee.

International Atomic Energy Agency 1984
International Atomic Energy Agency. 1984. *Treatment of Low and Intermediate Level Liquid Radioactive Wastes,* Technical Reports Series No. 236, Vienna, Austria.

International Atomic Energy Agency 1987
International Atomic Energy Agency. 1987. *Techniques and Practices for Pretreatment of Low and Intermediate Level Solid and Liquid Radioactive Wastes,* Technical Reports Series No. 272, Vienna, Austria.

International Atomic Energy Agency 1988a
International Atomic Energy Agency. 1988a. *Training Courses on Radiation Protection,* Technical Reports Series No. 280, Vienna, Austria.

International Atomic Energy Agency 1988b
International Atomic Energy Agency. 1988b. Immobilization of Low and Intermediate Level Radioactive Wastes with Polymers, Technical Reports Series No. 289, Vienna, Austria.

International Atomic Energy Agency 1990
International Atomic Energy Agency. 1990. *Regulations for the Safe Transport of Radioactive Material,* Safety Series No. 6, Vienna, Austria.

International Atomic Energy Agency 1993a
International Atomic Energy Agency. 1993a. improved *Cement Solidification of Low and Intermediate Level Radioactive Wastes,* Technical Reports Series No. 350, Vienna, Austria.

International Atomic Energy Agency 1993b
International Atomic Energy Agency. 1993b. *Bituminization Processes to Condition Radioactive Wastes,* Technical Reports Series No. 352, Vienna, Austria.

International Atomic Energy Agency 1993c
International Atomic Energy Agency. 1993c. *Containers for Packaging of Solid Low and Intermediate Level Radioactive Wastes,* Technical Reports Series No. 355, Vienna, Austria.

International Commission on Radiation Units and Measurements (ICRU) 1992
International Commission on Radiation Units and Measurements (ICRU). 1992. "Measurement of Dose Equivalents from External Photon and Electron Radiations," ICRU Report 47.

Kalb et al. 1990
Kalb, P. D., et al. 1990. "Comparison of Modified Sulfur Cement and Hydraulic Cement for Encapsulation of Radioactive and Mixed Wastes, " CONF-9008119-2, BNL45163, 22 October 1990.

Kikuchi et al. 1991
Kikuchi, M., et al. 1991. "Advanced solidification technique using cement-glass," *RECOD '91: The Third International Conference on Nuclear Fuel Reprocessing and Waste Management, 14-18* April 1991, Sendai, Japan.

National Research Council 1990
National Research Council. 1990. *Health Effects of Exposure to Low Levels of Ionizing Radiation,* BEIR V, National Academy Press.

Nuclear Regulatory Commission 1986
Nuclear Regulatory Commission. 1986. "Management of Radioactive Mixed Wastes in Commercial Low-Level Wastes: Draft Report for Comment," U.S. Nuclear Regulatory Commission, Division of Waste Management, Office of Nuclear Material Safety and Safeguards, 1986 (Jan), Washington, DC.

Nuclear Regulatory Commission-Environmental Protection Agency 1987a
Nuclear Regulatory Comrnission-Environrnental Protection Agency. 1987a. "Combined NRC-EPA Siting Guidelines for Disposal of Mixed Low-Level Radioactive and Hazardous Waste," 1987 (Mar), Washington, DC.

Nuclear Regulatory Commission-Environmental Protection Agency 1987b
Nuclear Regulatory Commission-Environmental Protection Agency. 1987b. "Joint NRC-EPA Guidance on a Conceptual Design Approach for Commercial Mixed Low-Level Radioactive and Hazardous Waste Disposal Facilities," 1987 (Aug), Washington, DC.

Pennsylvania Power and Light Company 1990
Pennsylvania Power and Light Company. 1990. "Radiological Environmental Monitoring Program: 1989 Annual Report for Susquehanna Steam Electric Station Units 1 and 2," April 1990.

Portland Cement Association 1991
Portland Cement Association. 1991. "Solidification and Stabilization of Wastes Using Portland Cement," Engineering Bulletin of the Portland Cement Association.

Rich and Cherry 1987
Rich, G., and Cherry, K. 1987. *Hazardous Waste Treatment Technologies,* Pudvan Publishing Co., Northbrook.

Rogoshewski, Bryon, and Wagner 1983
Rogoshewski, P., Bryon, H., and Wagner, K. 1983. *Remedial Action Technology for Waste Disposal Sites,* Pollution Technology Review 101, Noyes Data Co., New Jersey.

Appendix B
Glossary

B-1. Terms

ACTIVITY: A measure of the rate at which a material is emitting nuclear radiations; usually given in terms of the number of nuclear disintegrations occurring in a given quantity of material over a unit of time; the standard unit of activity is the Curie (Ci) which is equal to 3.7 x 10^{10} disintegrations per second.

ALPHA RADIATION: One of the particles emitted in radioactive decay; identical in mass with the nucleus of the helium atom; loses energy rapidly when traversing through matter.

BACKGROUND RADIATION: Radiation in the environment from naturally occurring radioactive isotopes, cosmic radiation, and fallout from man's activities such as nuclear weapons testing.

BETA RADIATION: One of the particles emitted during radioactive decay: negatively charged beta particles are identical in mass and electrical charge to the electron, positively charged type is called a positron.

BUFFER ZONE: A portion of the disposal site that is controlled by the licensee and that lies under the disposal units and between the disposal units and the boundary of the site.

CURIE (Ci): A unit of radioactivity defined as the amount of a radioactive material that has an activity of 3.7 x 10^{10} disintegrations per second (alps). The SI unit is the Becquerel (Bq); equal to 1 dps.

DECONTAMINATION: The selective removal of radioactive and/or hazardous material from a surface or from within another material.

DOSE: The accumulated quantity of ionizing radiation to which a living organism is exposed during an interval of time. Modified by length of exposure time, type of exposed organism, manner of exposure, exposed tissues of the organism, intensity, and nature of radiation.

EXPOSURE: A measure of the ionization produced in air by X or gamma radiation. The special unit of exposure is the Roentgen. Acute exposure generally refers to a high level of exposure of short duration; chronic exposure is lower-level exposure of longer duration.

GAMMA RADIATION: Electromagnetic waves emitted from the nucleus during radioactive decay; of much higher energy than natural X-radiation; highly penetrating.

GRAY (Gy): An SI unit of absorbed dose. One Gray is equal to 100 rads.

GROUT: Fluid or semifluid material, often containing portland cement, which sets up into a solid state and provides mechanical stabilization or water flow control.

HALF-LIFE: The time in which half the atoms of a particular radioactive substance disintegrate to another nuclear form.

HAZARDOUS WASTE: Those wastes designated as hazardous by Environmental Protection Agency regulations in 40 CFR 261.

IN SITU: In the natural or original position; used to refer to in-place processes at a treatment, storage, or disposal site.

INADVERTENT INTRUDER: A person who might occupy a disposal site after closure and engage in normal activities, such as agriculture, dwelling construction, or other pursuits.

INTRUDER BARRIER: A sufficient containment of the waste that inhibits human contact with waste and helps to ensure that radiation and chemical exposures to an inadvertent intruder will meet the performance objectives set forth in 10 CFR 61 or 40 CFR 261; or engineered structures that provide equivalent protection to the inadvertent intruder.

IONS: Atomic particle, atom, or chemical radical bearing an electrical charge, either negative or positive.

IONIZING RADIATION: Any electromagnetic or particulate radiation capable of producing ions, directly or indirectly, in its passage through matter.

ISOTOPES: Nuclides having the same number of protons in their nuclei, and hence the same atomic number, but differing in the number of neutrons, and thereby differing in the mass number. Identical chemical properties exist between isotopes of a particular element.

LEACHATE: A solution containing dissolved and finely suspended solid matter and microbial waste products resulting from groundwater or infiltrating surface water seepage through waste.

LOW-LEVEL RADIOACTIVE WASTE: Radioactive waste not classified as high-level radioactive waste, transuranic waste, spent nuclear fuel, or by-product materials in section 11. *e* (2) of the Atomic Energy Act.

MIXED WASTE: Waste materials containing or having a high probability of containing both hazardous waste materials and low-level radioactive waste materials either as separate components or single components possessing both hazardous and radioactive natures.

RAD: The unit of absorbed dose of ionizing radiation equal to 100 ergs per gram or 0.01 joule per kilogram.

RADIOACTIVITY: The property of certain naturally unstable isotopes to spontaneously emit particles or gamma radiation, or to emit X-radiation following orbital electron capture, or to undergo spontaneous fission.

REM: A unit of dose equivalent. The dose equivalent in reins is numerically equal to the absorbed dose in rads multiplied by the quality factor, the distribution factor, and any other necessary modifying factors.

REMEDIAL ACTION: Defined by CERCLA, Section 101(24), as "those actions taken . . . in the event of a release or threatened release of a hazardous substance into the environment, to prevent or minimize the release of hazardous substances so that they do not migrate to cause substantial danger to present or future public health or welfare or the environment. "

ROENTGEN: The special unit of exposure. One Roentgen equals 2.58 x 10^{-4} coulomb per kilogram of air.

SIEVERT (Sv): An SI unit of dose equivalent and effective dose equivalent. One sievert is equal to 100 reins.

TRANSURANIC WASTE: Waste that, without regard to source or form, at the end of institutional control periods, is contaminated with alpha-emitting radionuclides of atomic number greater than 92 and half-lives greater than 20 years in concentrations greater than 100 nanoCuries per gram, or has a smearable alpha contamination greater than 4,000 dpm/cm^2 averaged over the accessible surface.

TREATMENT: Any method, technique, or process, including neutralization, designed to change the physical, chemical, or biological character or composition of any hazardous waste so as to neutralize such waste, or so as to recover energy or material resources from the waste, or so as to render such waste nonhazardous or less hazardous; safer to transport, store or dispose of; or amenable to recovery, amenable for storage, or reduced in volume.

X-RADIATION, X-RAY: Electromagnetic waves produced outside the atomic nucleus which are of higher energy than visible light but less energy than gamma radiation.

ZEOLITES: Hydrated silicates of aluminum and sodium and/or calcium which are used as ion exchange resins.

B-2. Abbreviations

AEC	Atomic Energy Commission
ALARA	As low as reasonably achievable
ALI	Annual limits on intake
AMCCOM	Armament, munitions, and chemical command
ARAR	Applicable or relevant and appropriate requirement
BRC	Below regulatory concern
CDAP	Chemical data acquisition plan
CDQM	Chemical data quality management
CE	Corps of Engineers
CERCLA	Comprehensive Environmental Response, Compensation, and Liability Act of 1980
CFR	Code of Federal Regulations
DAC	Derived Air Concentration
DoD	Department of Defense
DOE	Department of Energy
DOT	Department of Transportation
EM	Engineer Manual
EPA	U.S. Environmental Protection Agency
FS	Feasibility Study
GM	Geiger Mueller
HEPA	High efficiency particulate air
HLW	High level waste

HQUSACE	Headquarters, U.S. Army Corps of Engineers
IAEA	International Atomic Energy Agency
ICRP	International Commission on Radiation Protection
ISV	In situ vitrification
JHCM	Joule heated ceramic melter
LLRW	Low level radioactive waste
MCL	Maximum contaminant level
MCX	Mandatory Center of Expertise
MW	Mixed waste
NARM	Naturally occurring and accelerator-produced radioactive material
NCP	National Contingency Plan
NORM	Naturally occurring radioactive material
NPL	National Priorities List
NRC	Nuclear Regulatory Commission
OSHA	Occupational Safety and Health Administration
PA	Preliminary assessment
PCR	Plasma centrifugal reactor
PPE	Personal protective equipment
PRP	Potentially responsible party
QA	Quality assurance
QC	Quality control
RCRA	Resource Conservation and Recovery Act of 1976
REM	Roentgen Equivalent Man
RFI	RCRA Facility Investigation
RI	Remedial Investigation
ROD	Record of Decision
SARA	Superfund Amendments and Reauthorization Act of 1986
SEG	Scientific Ecology Group, Inc.
SSHP	Site Safety and Health Plan
TCLP	Toxicity characteristic leaching procedure
TLD	Thermoluminescent Dosimeter
TRU	Transuranic
USACE	U.S. Army Corps of Engineers

B-3. Bibliography of Regulatory Documents

CODE OF FEDERAL REGULATIONS

10 CR 20:	Standards for Protection Against Radiation
10 CFR 61:	Licensing Requirements for Land Disposal of Radioactive Wastes
10 CFR 71:	Transport of Radioactive Wastes
29 CFR 1910:	Safety and Health Regulations for Workers Engaged in Hazardous Waste Operations
29 CFR 1926:	Safety and Health Regulations for Construction
29 CFR 1919:	Occupational Safety and Health Standards
40 CFR 61:	National Emission Standard for Radionuclide Emissions from Department of Energy Facilities
40 CFR 191:	Environmental Radiation Protection Standards for Management and Disposal of Spent Nuclear Fuel, High Level, and Transuranic Radioactive Wastes
40 CFR 192:	Health and Environmental Protection Standards for Uranium and Thorium Mill Tailings
40 CFR 240:	Guidelines for the Thermal Processing of Solid Wastes
40 CFR 241:	Guidelines for the Land Disposal of Solid Wastes
40 CFR 249:	Guideline for the Federal Procurement of Cement and Concrete Containing Fly Ash
40 CFR 261:	Hazardous Waste Management System: Identification and Listing of Hazardous Waste
40 CFR 262:	Standards for Generators of Hazardous Waste

40 CFR 263:	Standards for Transporters of Hazardous Wastes
40 CFR 264:	Standards for Owners and Operators of Hazardous Waste Treatment, Storage, and Disposal Facilities
40 CFR 265:	Interim Status Standards for Owners and Operators of Hazardous Waste Treatment, Storage, and Disposal Facilities
40 CFR 267:	Interim Status Standards for Owners and Operators of New Hazardous Waste Land Disposal Facilities
40 CFR 268:	Land Disposal Restrictions
40 CFR 280:	Underground Storage Tanks
49 CFR 171-179:	Transportation of Radioactive Waste

CONGRESSIONAL ACTS

Clean Air Act
Public Law 88-206

Comprehensive Environmental Response, Compensation, and Liability Act (CERCLA)
Public Law 96-510

Superfund Amendments and Reauthorization Act of 1986 (SARA, amending CERCLA)
Public Law 99-499

Clean Water Restoration Act
Public Law 89-753

Federal Water Pollution Control Act
Public Law 86-70

National Environmental Policy Act (NEPA)
Public Law 91-190

Resource Conservation and Recovery Act (RCRA)
Public Law 94-580

Hazardous and Solid Waste Amendments of 1984 (HSWA)
(amending RCRA)
Public Law 98-616

Safe Drinking Water Act
Public Law 93-523
Solid Waste Disposal Act (p. 2-30)

Toxic Substances Control Act
Public Law 94-469

Water Quality Act
Public Law 89-234

National Low Level Radioactive Waste Policy Act of 1980 (LLRWPA)
Public Law 96-573

Low Level Radioactive Waste Policy Act Amendments of 1985 (LLRWPAA)
Public Law 99-240

Atomic Energy Act of 1954 (and amendments)

Energy Reorganization Act of 1974

Solid Waste Disposal Act

Appendix C
Vendors

Chem-Nuclear Systems, Inc.
P.O. Box 726
Barnwell, SC 29812
(803) 259-1781

Envirocare of Utah, Inc.
215 South State St.
Suite 1160
Salt Lake City, UT 84111
(801) 532-1330

Geosafe Corporation
2950 George Washington Way
Richland, WA 99352
(509) 375-0710
(509) 375-7721 (fax)

NSSI/Sources and Services, Inc.
P.O. Box 34042
Houston, TX 77234
(713) 641-0391
(713) 641-6153 (fax)

Nuclear Waste Technology
2400 Ardmore Blvd.
Pittsburgh, PA 15221
(412) 636-5877

Pacific Nuclear
Brookside Office Park
No. 1 Harbison Way, Suite 209
Columbia, SC 29212
(803) 781-0426
(803) 781-9316 (fax)

Scientific Ecology Group, Inc. (SEG)
P.O. Box 2530
1560 Bear Creek Road
Oak Ridge, TN 37830
(615) 481-0222 (phone)

American Ecology, Inc.
P.O. Box 638
Richland, WA 99352
(509) 377-2411