APPENDIX K

CRANES, DERRICKS, AND HOOKS

FIGURE K-1

MOBILE AND LOCOMOTIVE CRANES

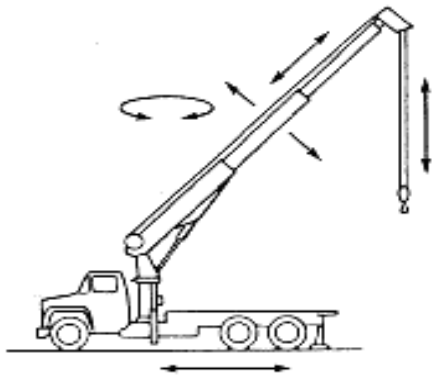

GENERAL NOTE: The boom may have a base boom structure of sections (upper and lower) between or beyond which additional sections may be added to increase its length, or it may consist of a base boom from which one or more boom extensions are telescoped for additional length.

COMMERCIAL TRUCK-MOUNTED CRANE — TELESCOPING BOOM

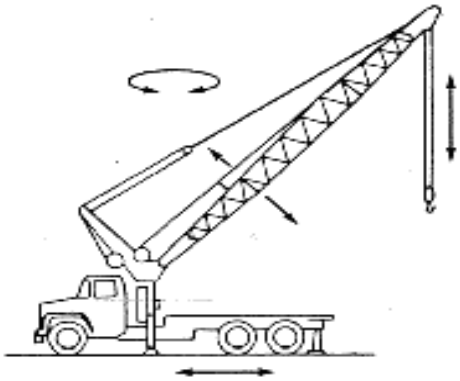

GENERAL NOTE: The boom may have a base boom structure of sections (upper and lower) between or beyond which additional sections may be added to increase its length, or it may consist of a base boom from which one or more boom extensions are telescoped for additional length.

COMMERCIAL TRUCK-MOUNTED CRANE — NONTELESCOPING BOOM

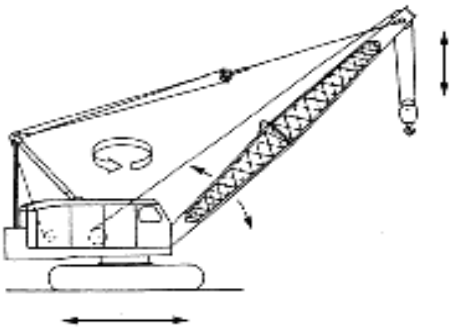

CRAWLER CRANE

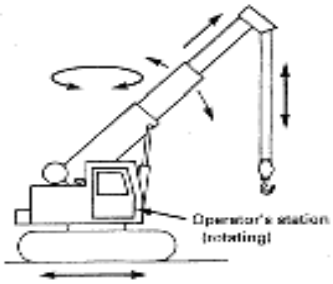

GENERAL NOTE: The boom may have a base boom structure of sections (upper and lower) between or beyond which additional sections may be added to increase its length, or it may consist of a base boom from which one or more boom extensions are telescoped for additional length.

CRAWLER CRANE — TELESCOPING BOOM

FIGURE K-1 (CONTINUED)

MOBILE AND LOCOMOTIVE CRANES

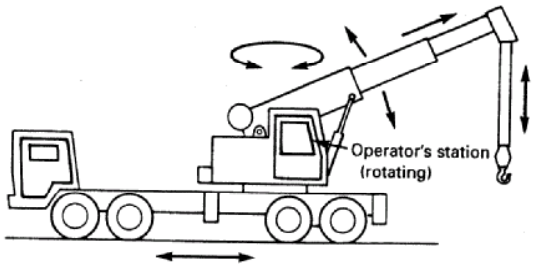

GENERAL NOTE: The boom may have a base boom structure of sections (upper and lower) between or beyond which additional sections may be added to increase its length, or it may consist of a base boom from which one or more boom extensions are telescoped for additional length.

WHEEL-MOUNTED CRANE — TELESCOPING BOOM (MULTIPLE CONTROL STATION)

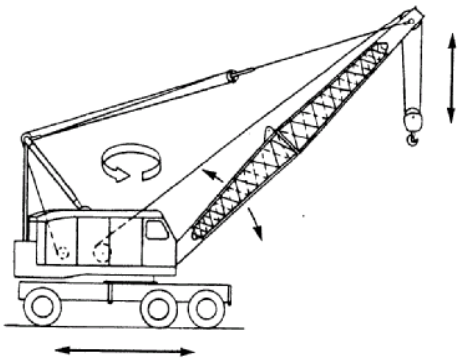

WHEEL-MOUNTED CRANE (SINGLE CONTROL STATION)

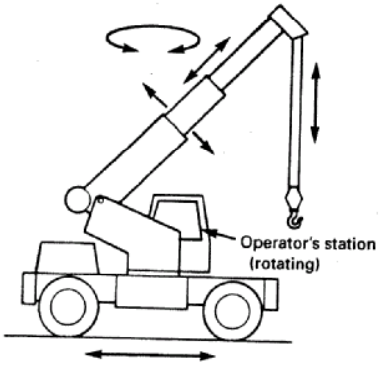

GENERAL NOTE: The boom may have a base boom structure of sections (upper and lower) between or beyond which additional sections may be added to increase its length, or it may consist of a base boom from which one or more boom extensions are telescoped for additional length.

WHEEL-MOUNTED CRANE — TELESCOPING BOOM (SINGLE CONTROL STATION)

FIGURE K-1 (CONTINUED)

MOBILE AND LOCOMOTIVE CRANES

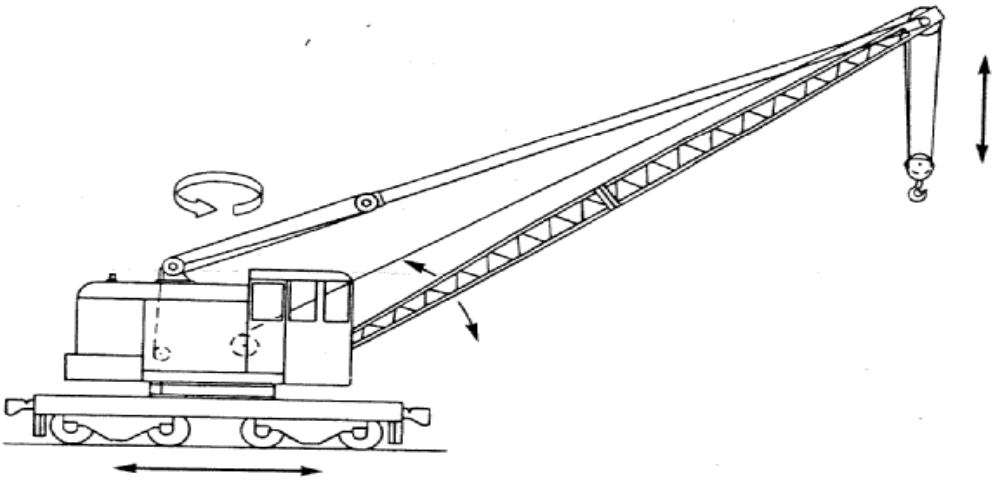

LOCOMOTIVE CRANE

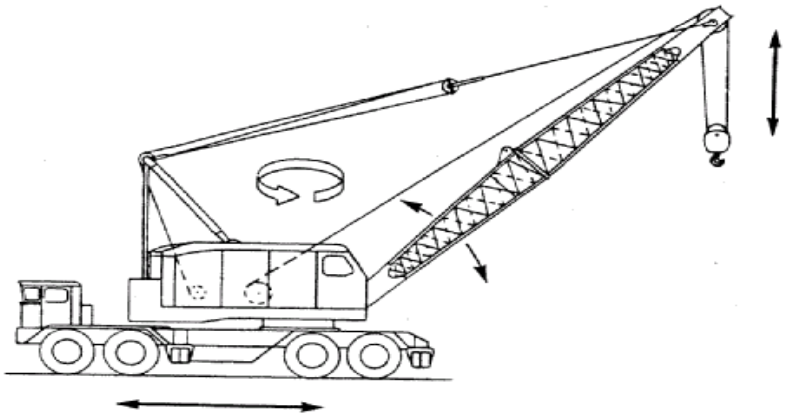

WHEEL-MOUNTED CRANE (MULTIPLE CONTROL STATION)

FIGURE K-1 (CONTINUED)

MOBILE AND LOCOMOTIVE CRANES

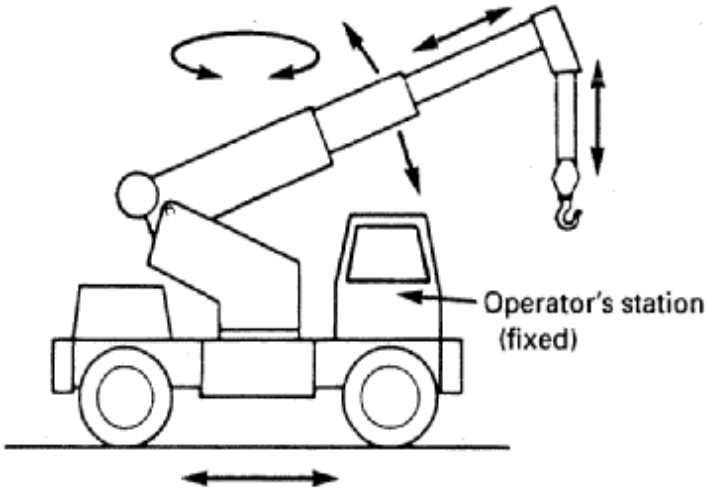

GENERAL NOTE: The boom may have a base boom structure of sections (upper and lower) between or beyond which additional sections may be added to increase its length, or it may consist of a base boom from which one or more boom extensions are telescoped for additional length.

**WHEEL-MOUNTED CRANE —
TELESCOPING BOOM (SINGLE CONTROL STATION)**

FIGURE K-1 (CONTINUED)

MOBILE AND LOCOMOTIVE CRANES

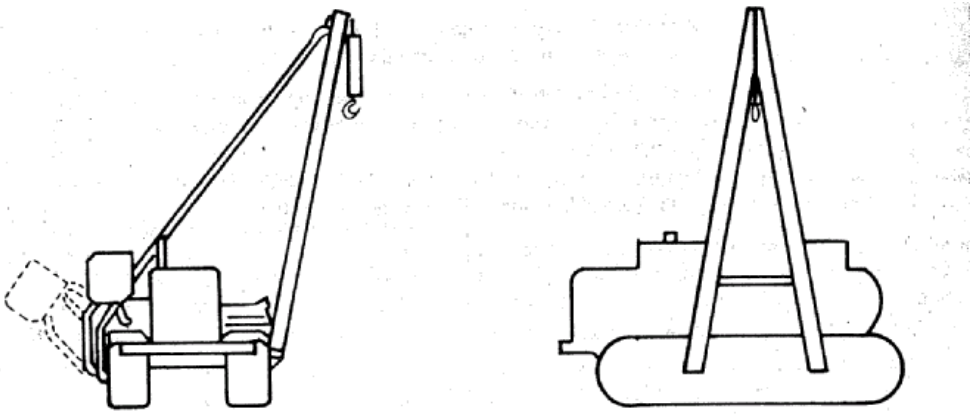

TRACK-TYPE TRACTOR SIDE BOOM

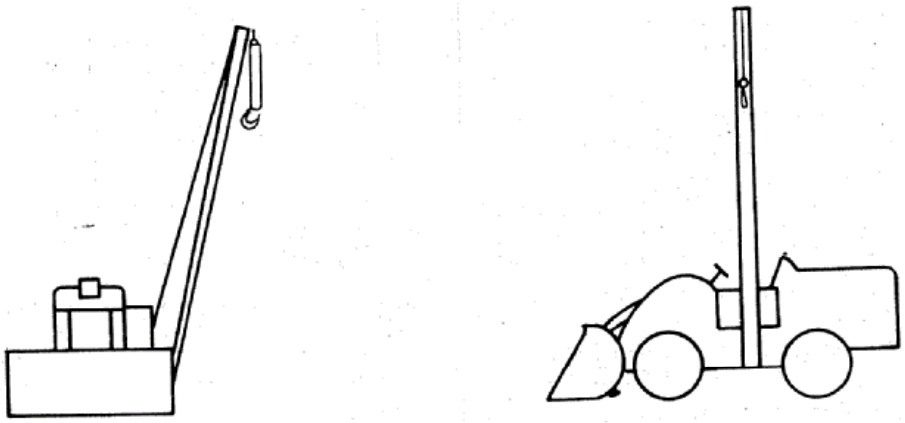

WHEEL-TYPE TRACTOR SIDE BOOM

FIGURE K-1 (CONTINUED)

MOBILE AND LOCOMOTIVE CRANES

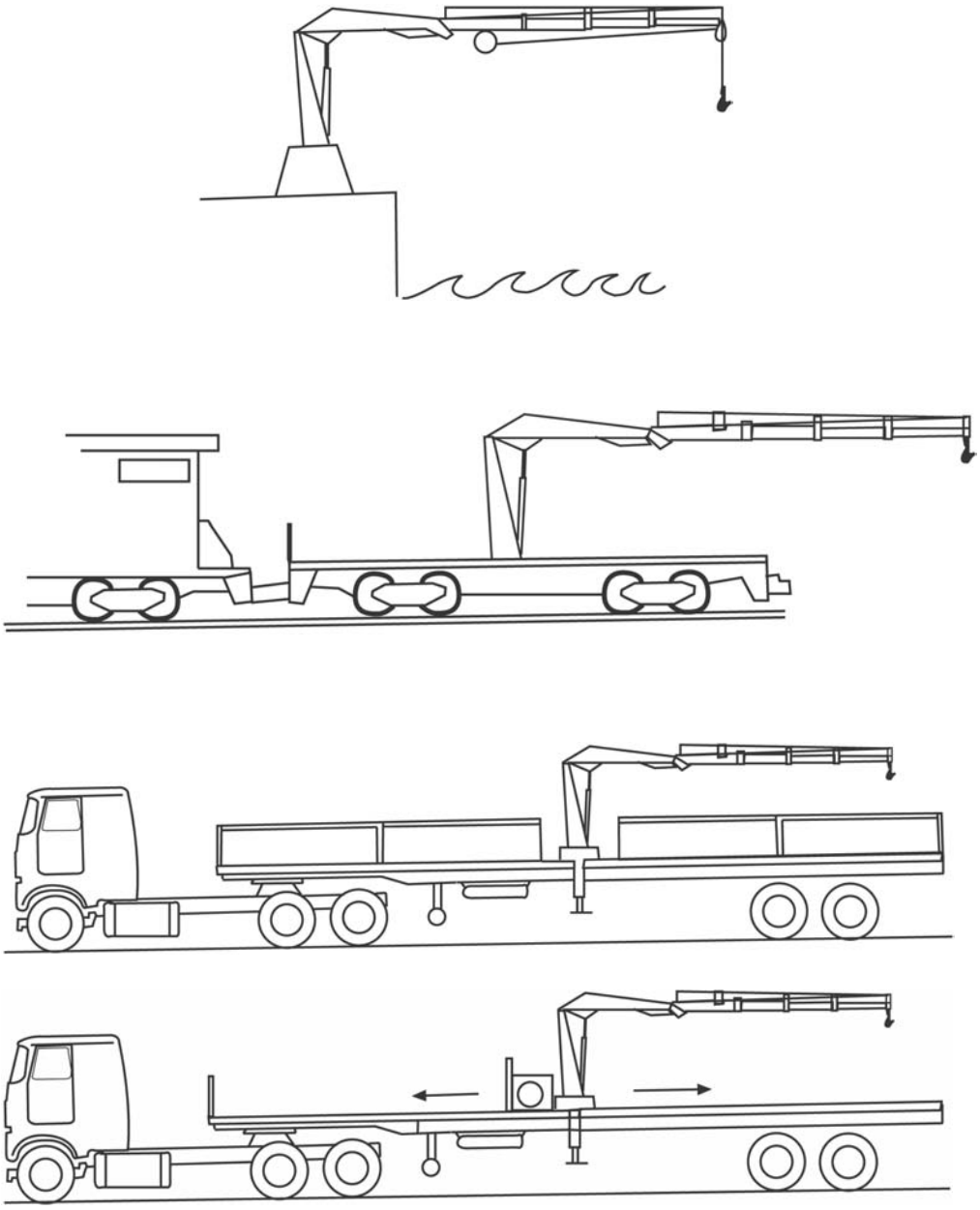

FIGURE K-1 (CONTINUED)

MOBILE AND LOCOMOTIVE CRANES

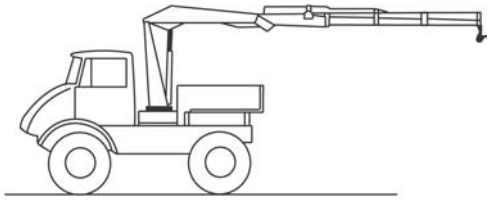

OFF-ROAD VEHICLE

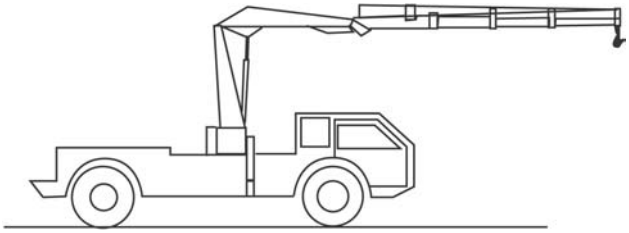

WHEEL-MOUNTED OFF-ROAD DUAL CONTROL STATION

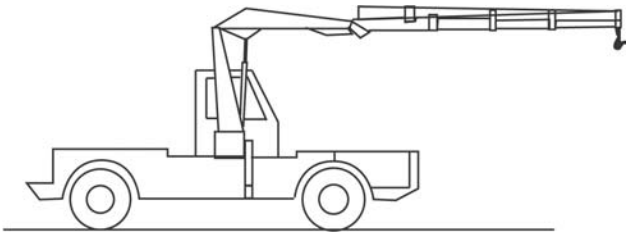

WHEEL-MOUNTED OFF-ROAD SINGLE CONTROL STATION

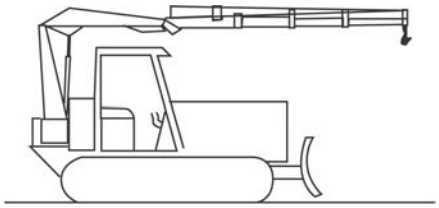

CRAWLER-MOUNTED OFF-ROAD SINGLE CONTROL STATION

FIGURE K-2

CONSTRUCTION TOWER CRANES

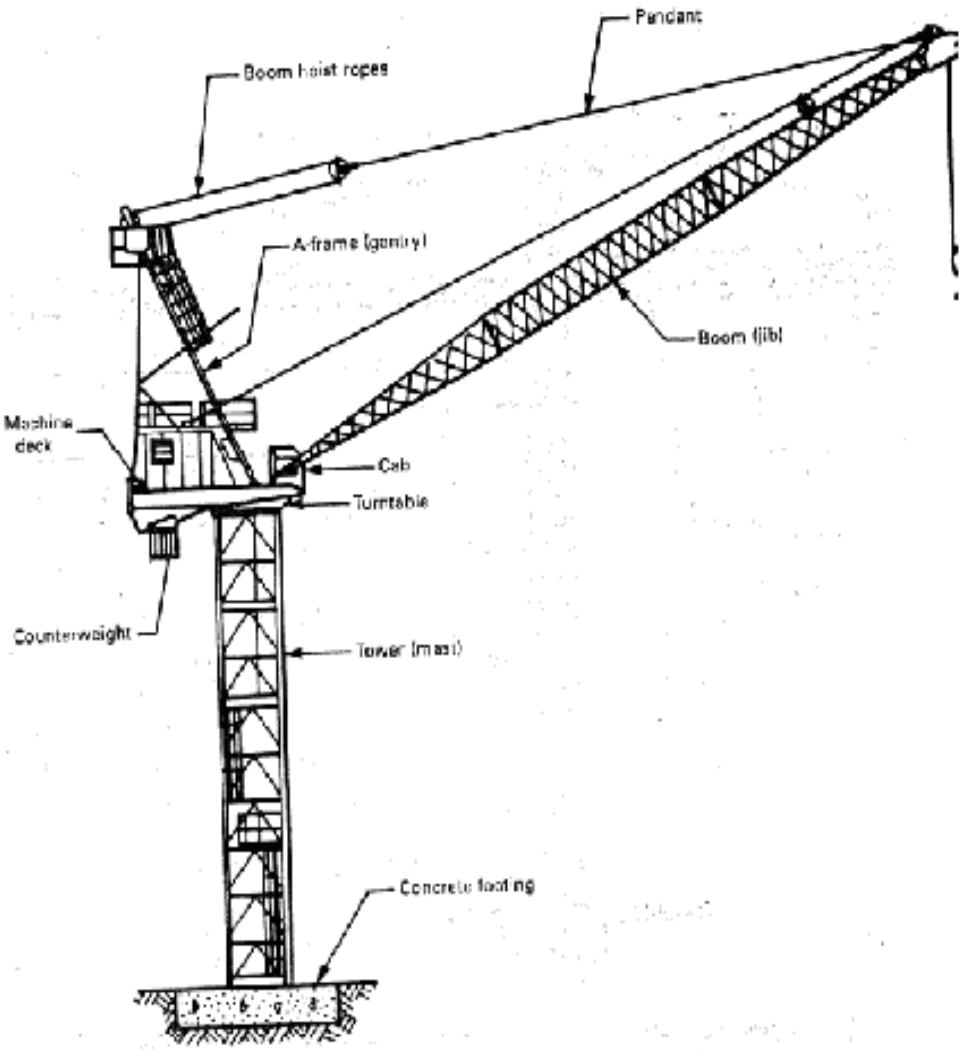

LUFFING TOWER CRANE — STATIC BASE, FREE STANDING CRANE

FIGURE K-2 (CONTINUED)

CONSTRUCTION TOWER CRANES

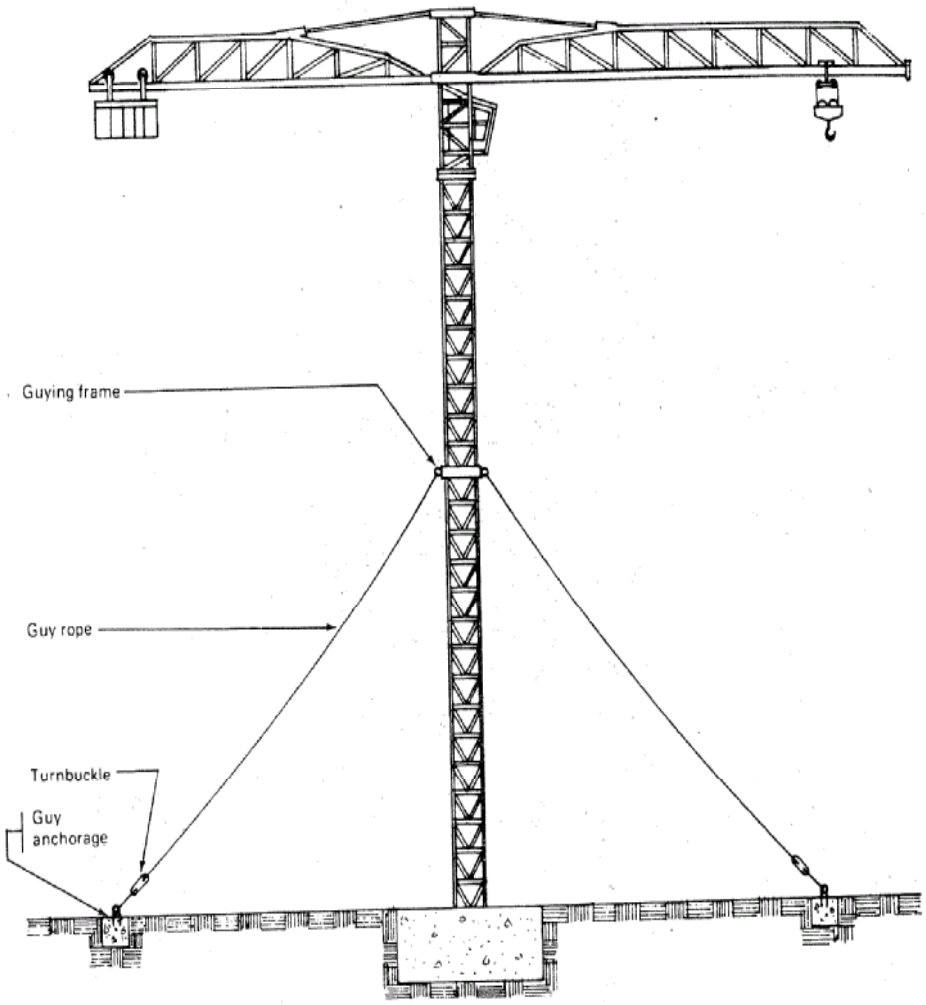

GENERAL NOTE: Three or more guys to be provided, symmetrically arranged.

GUYED TOWER CRANE

FIGURE K-2 (CONTINUED)

TOWER CRANES

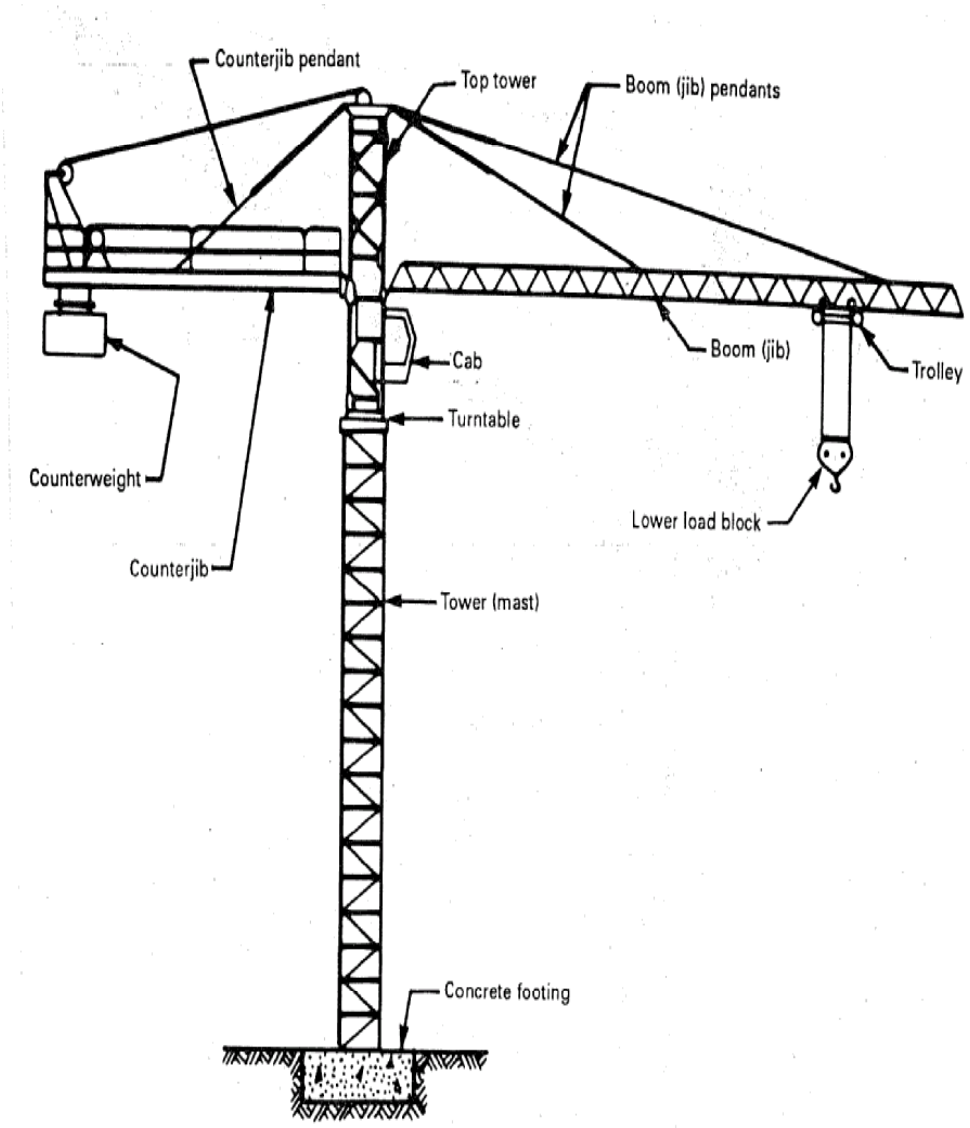

HAMMERHEAD TOWER CRANE — STATIC BASE, FREE STANDING CRANE

FIGURE K-3

OVERHEAD AND GANTRY CRANES

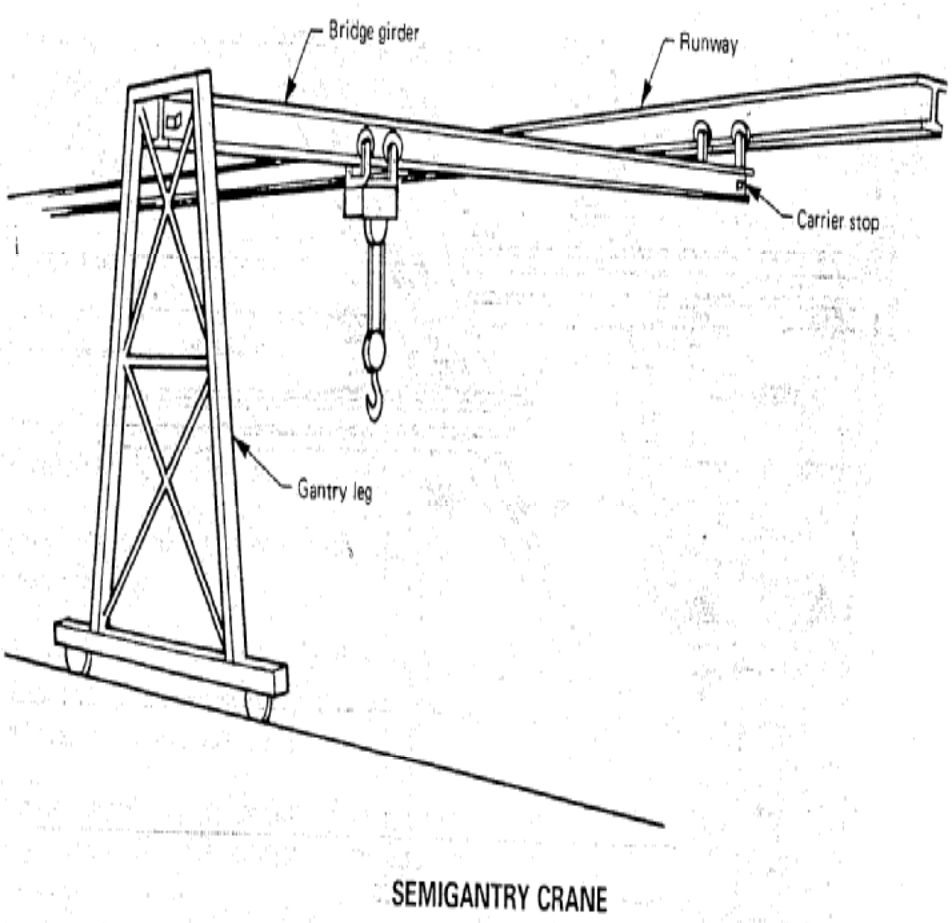

FIGURE K-3 (CONTINUED)

OVERHEAD AND GANTRY CRANES

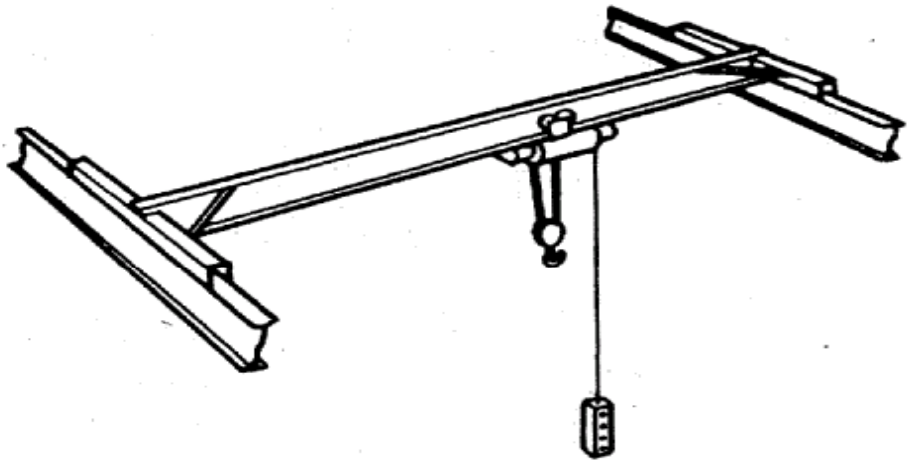

OVERHEAD FLOOR-OPERATED CRANE

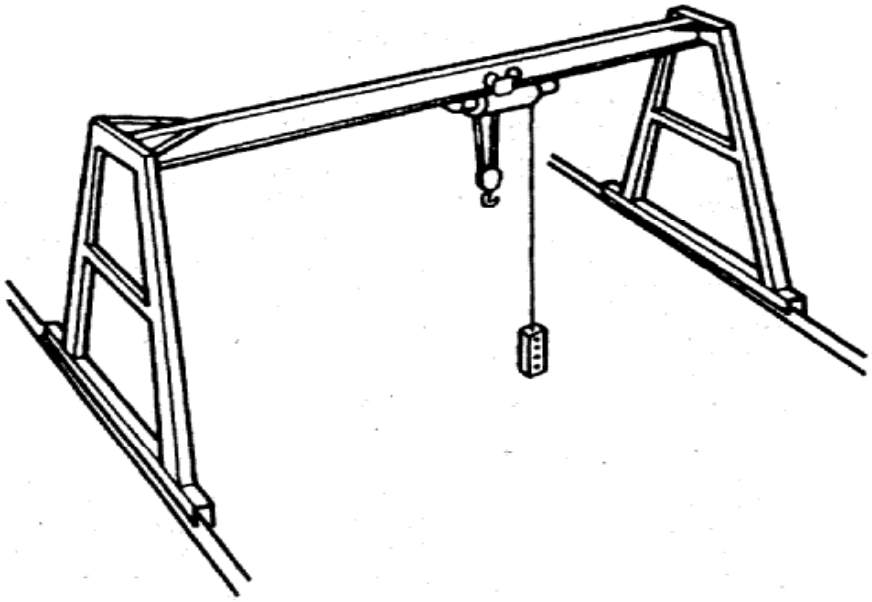

GANTRY CRANE

FIGURE K-3 (CONTINUED)

OVERHEAD AND GANTRY CRANES

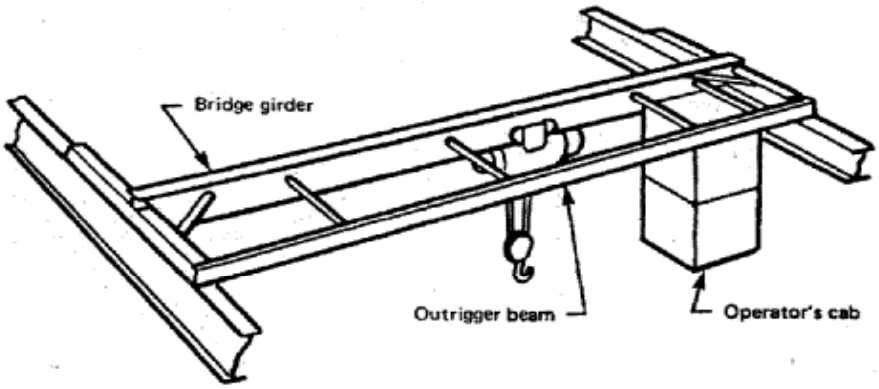

OVERHEAD CAB-OPERATED CRANE

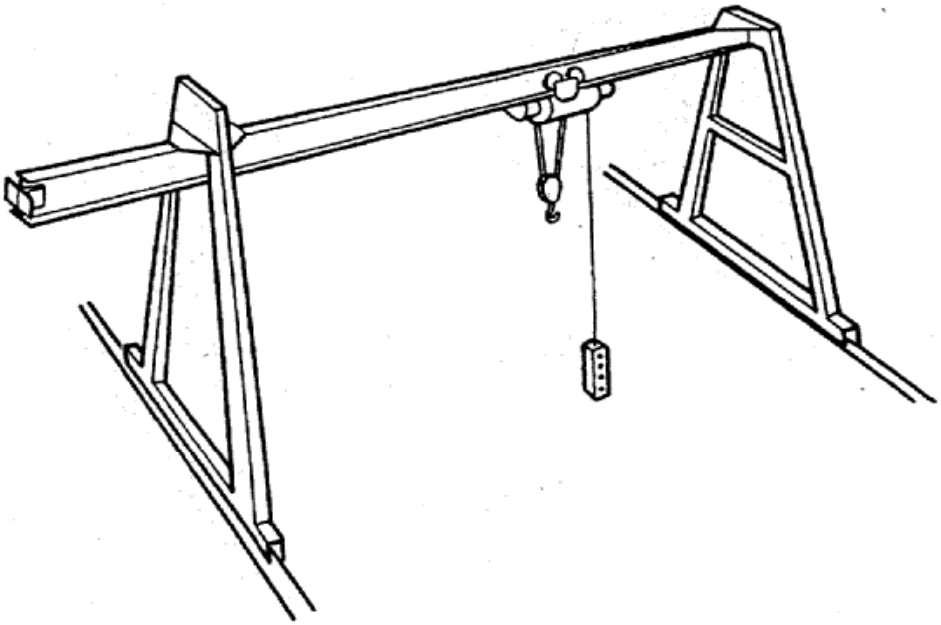

CANTILEVER GANTRY CRANE

FIGURE K-4

CAB-OPERATED CRANES

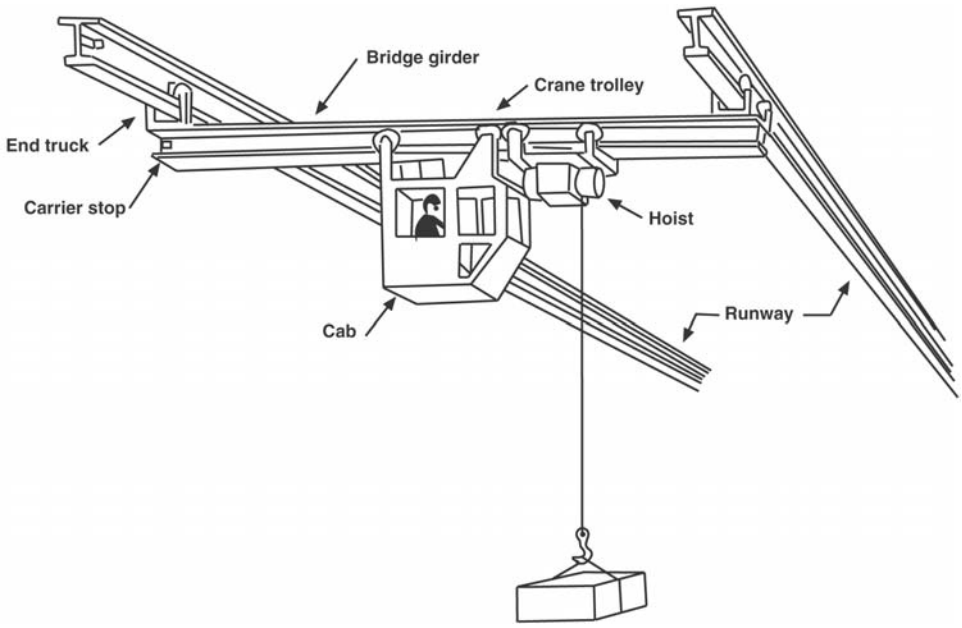

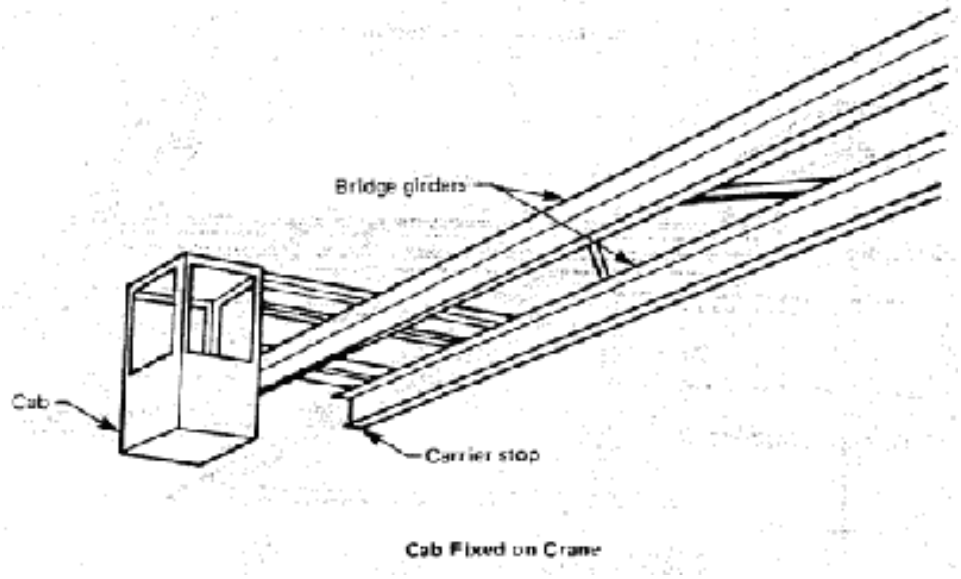

FIGURE K-5

FLOOR-OPERATED CRANES

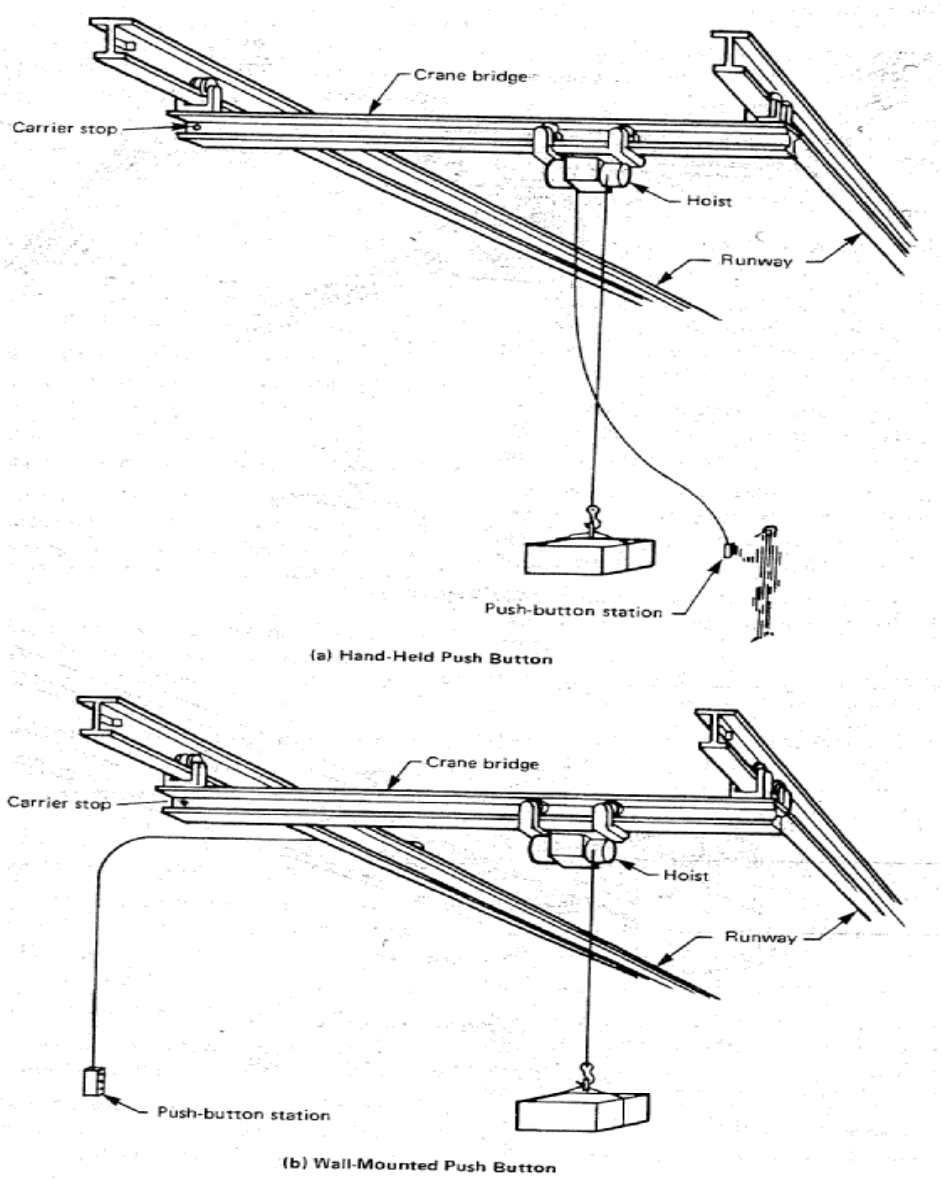

FLOOR-OPERATED CRANES

FIGURE K-6

FLOATING CRANES

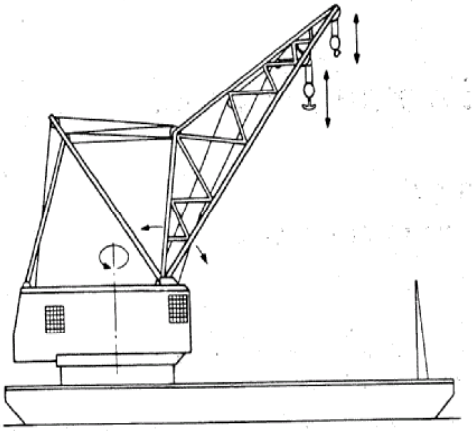

FLOATING CRANE

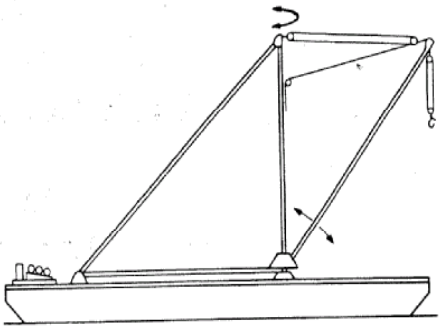

FLOATING STIFFLEG DERRICK

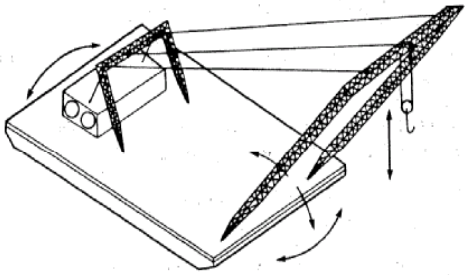

BARGE-MOUNTED SHEARLEG

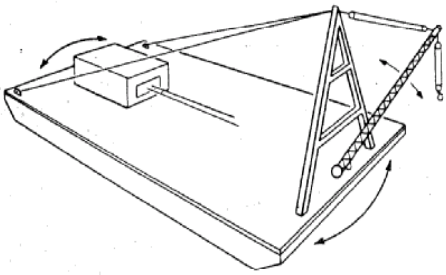

FLOATING A-FRAME DERRICK

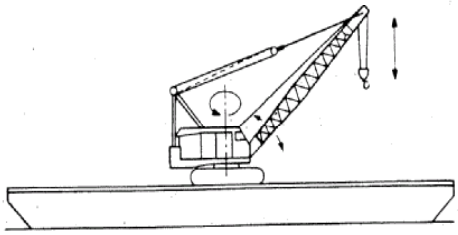

BARGE-MOUNTED LAND CRANE

FIGURE K-6 (CONTINUED)

FLOATING CRANES

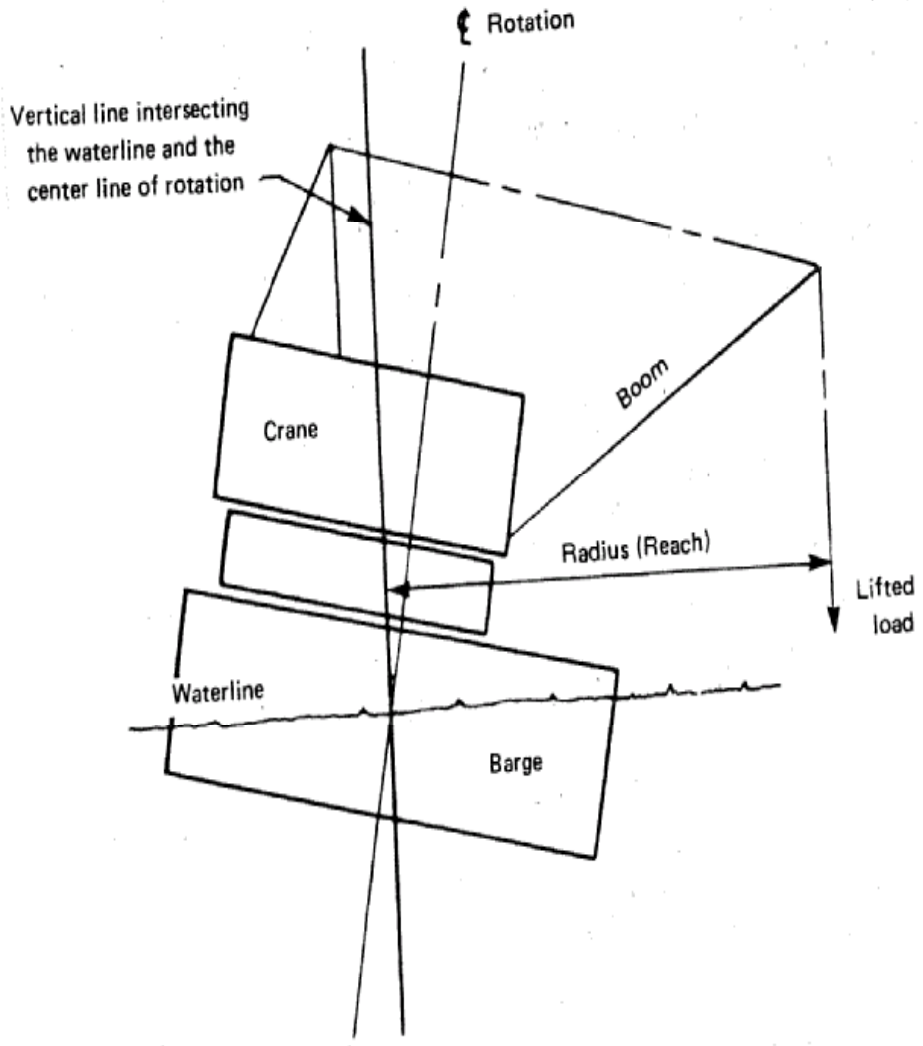

REACH FOR FLOATING CRANES

FIGURE K-7

DERRICKS

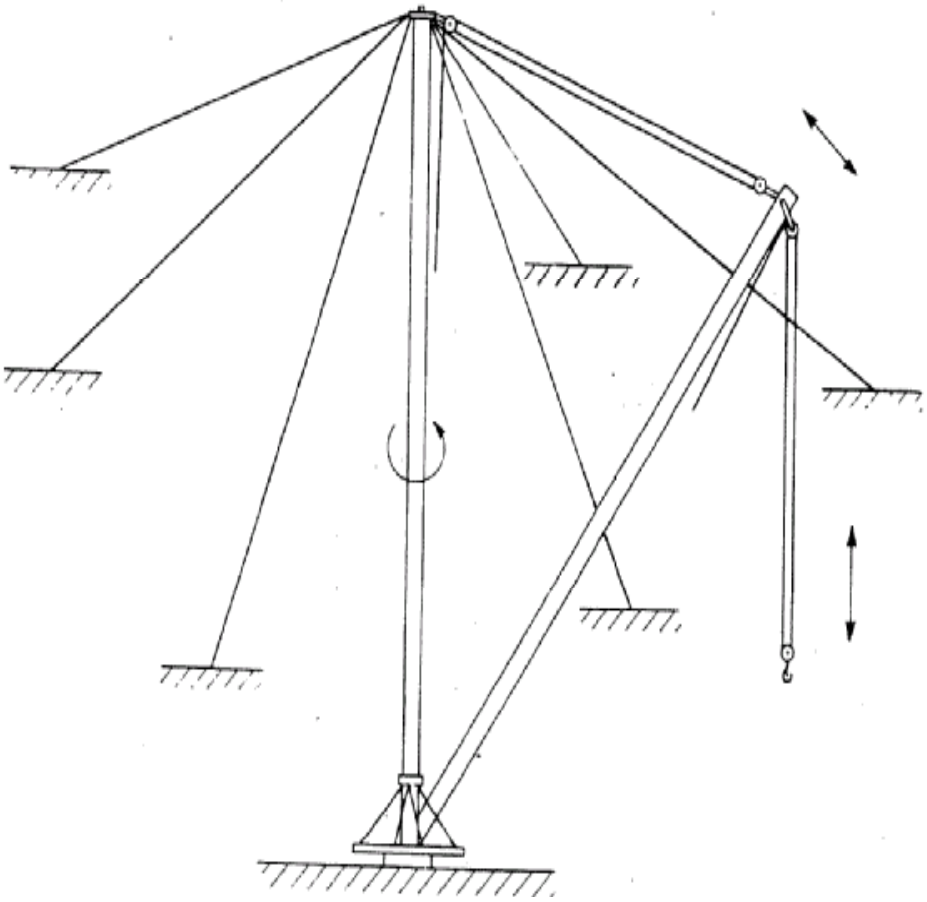

GUY DERRICK

FIGURE K-7 (CONTINUED)

DERRICKS

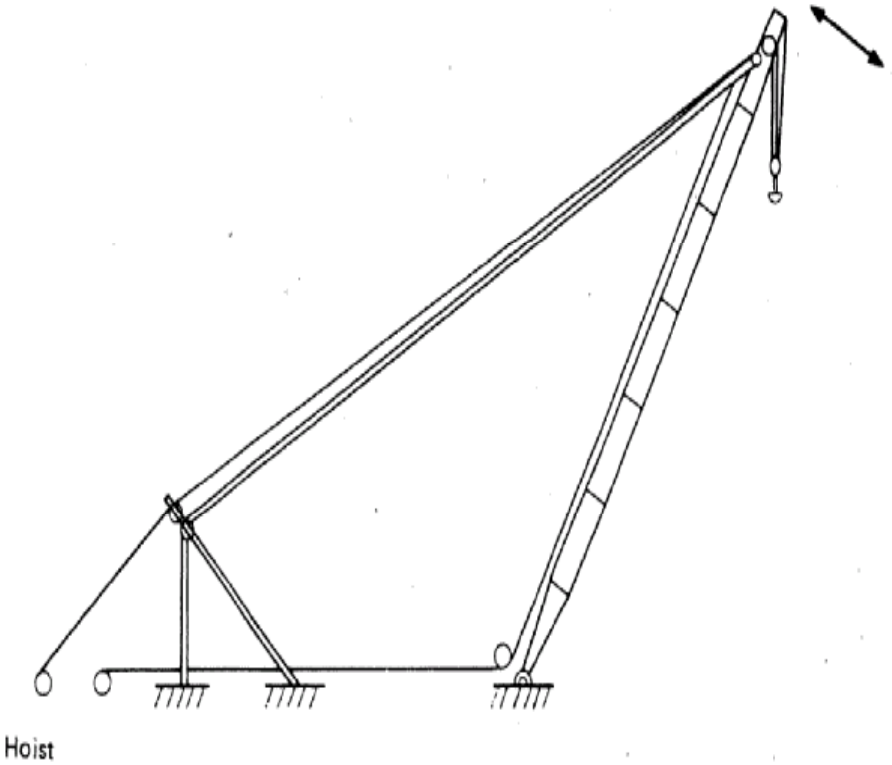

SHEARLEG DERRICK

FIGURE K-7 (CONTINUED)

DERRICKS

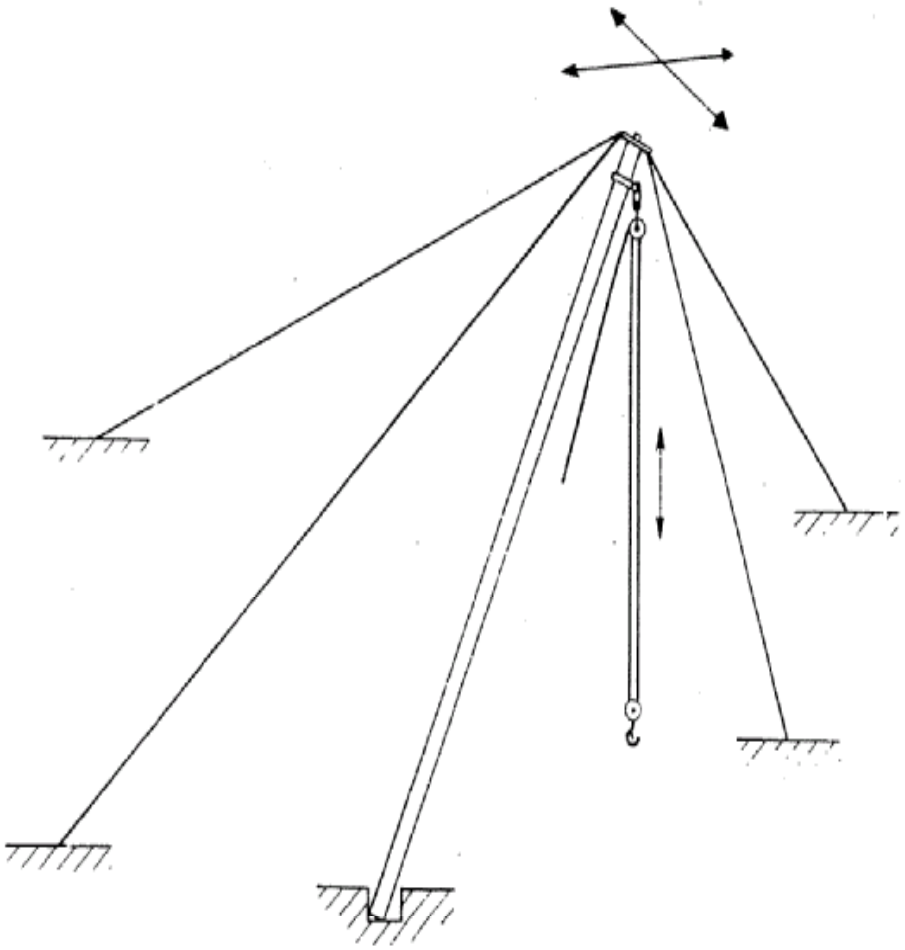

GIN POLE DERRICK

FIGURE K-7 (CONTINUED)

DERRICKS

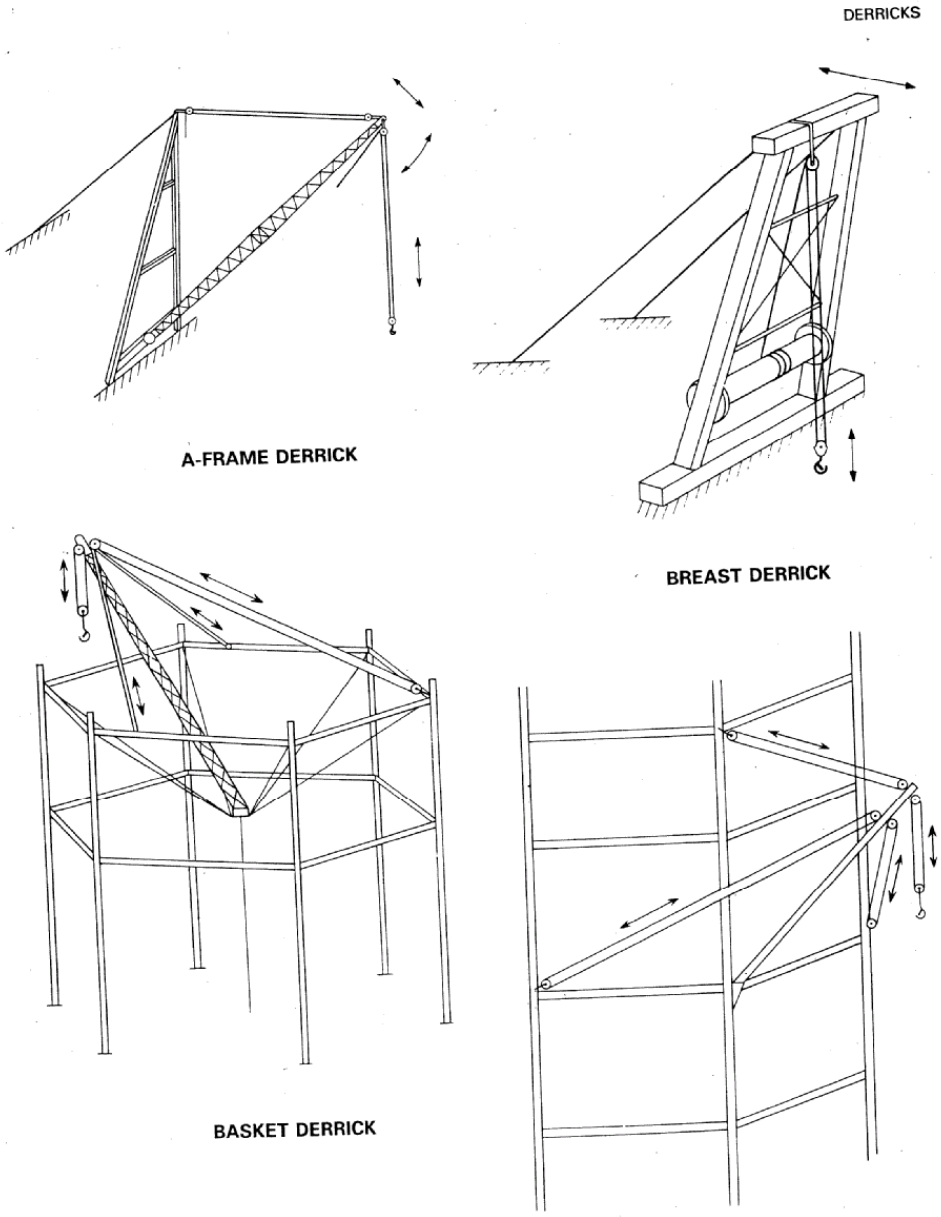

FIGURE K-8

DROP SECTION (LIFT SECTION)

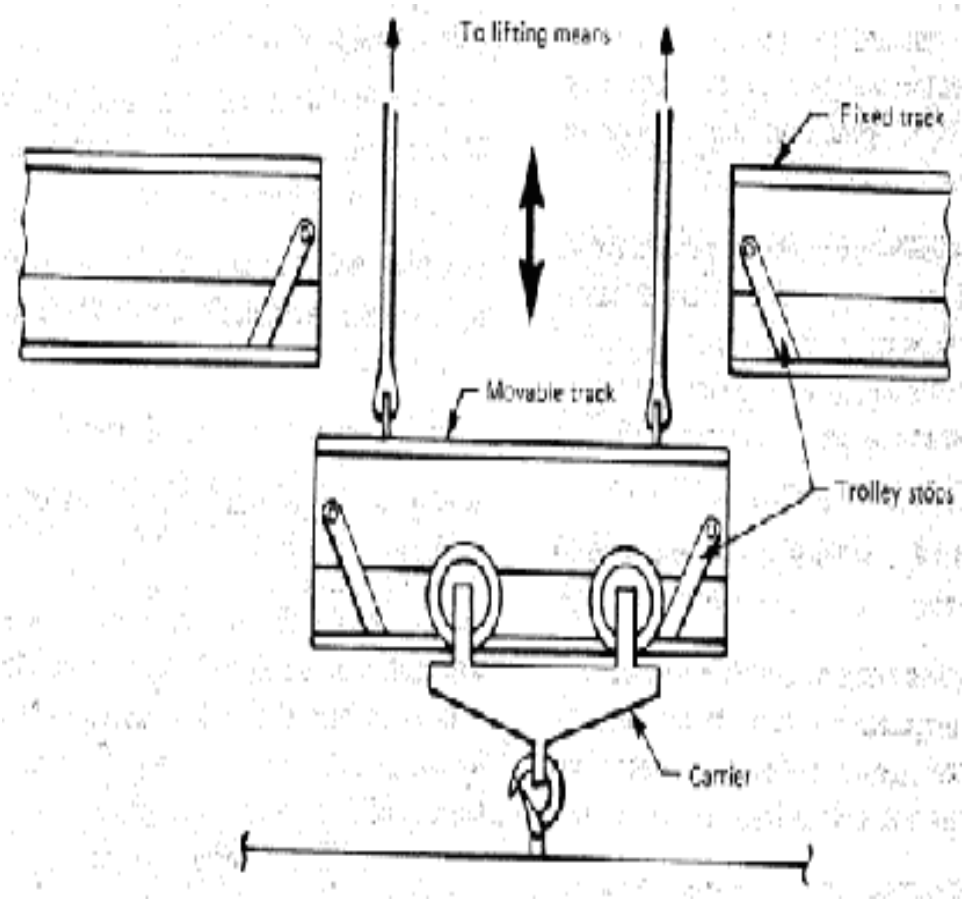

FIGURE K-9

HOOKS

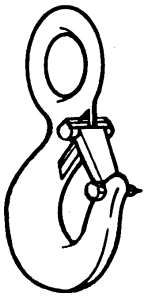

SELF-CLOSING TIPLOCK LATCH (EYE HOOK)

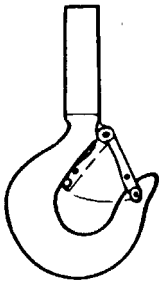

SELF-CLOSING TIPLOCK LATCH (SHANK HOOK)

SELF-CLOSING BAIL (EYE HOOK)

SELF-CLOSING FLAPPER LATCH (SWIVEL HOOK)

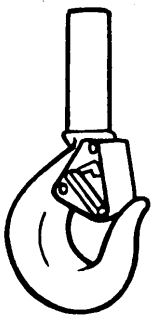

SELF-CLOSING FLAPPER LATCH (SHANK HOOK)

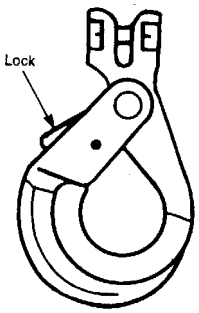

SELF-LOCKING CLEVIS HOOK (CLOSED)

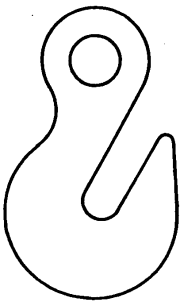

EYE GRAB HOOK