APPENDIX A
DESIGN CONSIDERATIONS

1.0 INTRODUCTION

The technology to *treat* hazardous and toxic wastes is undergoing a profound transformation as a result of the new regulations and requirements on discharge limits. Conventional chemical oxidation and activated carbon which have served the industry well for decades can not meet the more stringent regulations, and innovative technologies such as the advanced oxidation process (AOP) have emerged.

Advanced Oxidation Process refers to the use of ultraviolet light in combination with ozone or hydrogen peroxide or both to generate a very reactive free radical such as hydroxyl radicals ($0H^{1}$) to destroy the organic contaminants. The hydroxyl radicals formed by AOP increases the rate of reactions over 100 to 1000 times higher than that observed with either oxidants or UV applied separately. As a result, many organic compounds which are normally resistant to powerful oxidants can be destroyed by the AOP in a short time, and most of the inherent shortcomings of chemical oxidation can be overcome. The oxidants commonly used in the UV/Oxidation process are ozone (0_3) and hydrogen peroxide (H_2O_2).

This Engineering Technical Letter (ETL) discusses the UV/Oxidation process for the treatment of hazardous and toxic wastes (HTW) in aqueous media.

1.1 PURPOSE

This ETL, intended for designers of AOP systems, provides engineering and detailed design information for the application and selection of an AOP system once the wastewater characteristics and site conditions are known.

The engineering and design procedures provided are applicable to projects on HTW sites, Department of Defense (DoD) sites, or for other Federal Agencies f or which the U.S. Army Corps of Engineers (USACE) is the responsible design agent, and should be adapted to the requirements of other programs.

1.2 SCOPE

The following topics are covered in this ETL:

- Background on the LW/Oxidation process,
- Principles of operation,
- LW/Oxidation applicability,
- Design considerations,
- LW/Oxidation process controls and instrumentation,
- Legal requirements,
- Treatability studies,
- Sizing criteria,
- Construction materials and installation,
- Operating conditions,
- Design and construction package,
- Operation and maintenance manuals,
- Procurement, and
- Status of AOP technology.

1.3 REFERENCES

The information used in the development of this ETL is listed in Appendix D, Bibliography. The sources of information include research reports, industry literature, review of comparable technical literature, university textbooks and discussions with manufacturers and users.

1.4 BACKGROUND

The UV/Ozone process was first used in the early 1970s. Its use was limited to water purification. In the wastewater treatment field, UV/Ozone (UV/O_3) technology was developed for cyanides in wastewater from electroplating and color photographic processes[1,2]. The technology has also been applied to the destruction of mixed cyanides and organic chemical processes. In 1977, Rice and Browning[3] reported that the UV/Ozone process has been used successfully at an industrial metal finishing plant, at a US Air Force base and at a French affiliate of a large U.S. chemical company to remove cyanide concentrations in plating wastes. PCBs, which are highly resistant to ozone oxidation, also have been reported to be destroyed rapidly by the UV/Ozone process. The technology has been specified as Best Practicable Control Technology Currently Available (BPTCA) by EPA[4].

At the same time, during the period of December 1976 to March 1977, the USACE Waterways Experiment Station successfully demonstrated the applicability of the LW/Ozone process to the treatment of water contaminated with chlorinated hydrocarbons, organophosphorus, organosulfur, and other organic compounds(5). Other investigators have discovered that LW/Ozone and LW/Hydrogen Peroxide processes were also effective for treating water contaminated with different types of organics including explosive wastes, called pink water[6,7,8,9,10].

Since the early 1980s, the EPA*s Superfund Innovative Technology Evaluation (SITE) program has utilized AOP in several Superfund Demonstration sites to evaluate the technology. EPA has published positive results[11,12,13,1,15].

During the last 5 years, a large number of AOP full-scale installations have been used in both military and industrial sites for the remediation of groundwater and industrial wastewaters. Typical contaminant classes destroyed by AOP include petroleum products, industrial solvent-related organics such as trichloroethylene (TCE), dichloromethylene (DCE), trichloroethane (TCA), and vinyl chloride, PCBs, and explosive wastes[16,17,18,19]. More recently, several full-scale implementations of AOP have been used at military sites under the supervision of the USACE for the remediation of groundwater contaminated with organic compounds from old munitions arsenals and at an abandoned industrial chemical plant[17,18,19,20].

1.5 THEORY

Chemical oxidation processes involve oxidation-reduction (redox) reactions which are essentially an exchange of electrons between chemical species. This exchange of electrons affects the oxidation state (valence) of the chemical species involved. The carbon bonds are broken as a result of this electron exchange, and the organic compounds are either completely destroyed or converted to smaller and typical less hazardous compounds.

From a thermodynamic standpoint, all organic compounds are amenable to oxidation, given ample time and sufficient oxidant dosage. However, oxidation reactions are inherently limited by

their chemical kinetics. Oxidation reactions are characterized by:

! Slow reaction rates with respect to target compound(s), and

! Unacceptably high oxidant dosage requirements due to the presence of non-target compound(s)

The need for a more powerful oxidizing method to overcome these shortcomings has emerged. Research studies have revealed that kinetic limitations could be overcome, if a free radical such as hydroxyl radical ($OH^{\prime}$) is used to carry out the oxidation reaction.

Hydroxyl radicals are generated by (1) hydrogen peroxide in the presence of ferrous catalyst, (2) UV irradiation of hydrogen peroxide, (3) UV irradiation of ozone, or (4) combining ozone with hydrogen peroxide.

UV radiation in conjunction with hydrogen peroxide or ozone has gained a great deal of attention during recent years. Hydroxyl radicals, generated via UV photolysis of either hydrogen peroxide or ozone, or by the reaction between hydrogen peroxide and ozone offers the following advantages:

! They have higher oxidation potential than ozone alone or hydrogen peroxide used separately; and

! They are less selective in carrying out the oxidation reaction. Therefore they are not restricted to specific classes of contaminants as is the case with molecular ozone, or hydrogen peroxide.

2.0 PRINCIPLES OF OPERATION

2.1 INTRODUCTION

Oxidation processes involve the exchange of electrons between chemical species. In oxidation-reduction (redox) half-reactions, the oxidation state of at least one reactant is raised while the oxidation state of another is lowered equally. For example, the degradation of cyanide by hydrogen peroxide in the presence of copper is as follows:

$$H_2O_2 + CN^- \xrightarrow{Cu^{+2}} CNO^- + H_2O \qquad (2\text{-}1)$$

In the above reaction, the cyanide ion (CN^-) is oxidized to cyanate (CNO^-) as it reacts with hydrogen peroxide. One electron is transferred from the cyanide ion to hydrogen peroxide, and the oxidation state of cyanide is raised from -1 to +1. At the same time, the oxidation state of the oxygen in the hydrogen peroxide molecule is reduced as it assumes a more stable (lower energy) form in a water molecule. This increase in the positive oxidation number occurs simultaneously with a decrease in the negative oxidation number and the oxidation takes place concurrently with reduction in a chemically equivalent ratio.

The power of oxidizing species can be seen by comparison with other oxidants with their oxidation potentials (E°) as shown in Table A-1. The reduction half-reactions and the oxidation potential are generally utilized to show the strength of the oxidants in the treatment of wastewater. The strength of an oxidant increases as the oxidation potential increases.

2.2 PRINCIPLES OF AOP

2.2.1 General

AOP technologies involve the use of an oxidant such as H_2O_2, or O_3 with or without catalyst or in combination with UV light to generate very reactive free radicals such as hydroxyl radicals ($OH^\bullet$) for the destruction of organic contaminants. Currently, several well-known approaches have been developed to generate hydroxyl radicals:

TABLE A-1

Oxidation Potential and Relative Potential of Common Oxidants

Oxidant	Reduction Half-Reaction	Potential E^{o}, V	Relative Potential, V(*)
Fluorine			
	$F_2 + 2H^+ + 2e^- \longrightarrow 2HF(aq)$	3.06	2.25
Ozone			
Acidic	$O_3 + 2H^+ + 2e^- \longrightarrow 2H_2O + O_2$	2.07	1.52
Basic	$O_3 + H_2O + 2e^- \longrightarrow O_2 + 2OH^-$	1.24	0.91
Hydrogen Peroxide			
Acidic	$H_2O_2 + 2H^+ + 2e^- \longrightarrow 2H_2O$	1.78	1.31
Basic	$HO_2^- + H_2O + 2e^- \longrightarrow 3HO^-$	0.85	0.62
Permangenate			
Acidic	$MnO_4^- + 4H^+ + 3e^- \longrightarrow MnO_2^- + 2H_2O$	1.67	1.23
Basic	$MnO_4^- + 2H_2O + 3e^- \longrightarrow MnO_2^- + 4OH^-$	0.59	0.43
Chlorine			
	$Cl_2 + 2e^- \longrightarrow 2Cl^-$	1.36	1.00
Hypochlorite			
	$ClO^- + H_2O + 2e^- \longrightarrow Cl^- + 2OH^-$	0.90	0.66
Oxygen			
Acidic	$O_2 + 4H^+ + 4e^- \longrightarrow 2H_2O$	1.23	0.90
Basic	$O_2 + 2H_2O + 4e^- \longrightarrow 4HO^-$	0.40	0.29

(*) Relative to Chlorine (i.e., Chlorine is 1.0)

- Dark-Based Homogeneous AOP
- Light-Based Heterogeneous AOP
- Light-Based Homogeneous AOP

These are discussed in the following chapters.

2.2.2 Dark-Based Homogeneous AOP

Dark-Based homogeneous AOP includes:

Ozone at high pH: $2O_3 + H_2O \xrightarrow{OH^-} OH^\circ + O_2 + HO_2^-$ (2-2)

Ozone + Peroxide: $O_3 + H_2O_2 \longrightarrow OH^\circ + O_2 + HO_2$ (2-3)
(Peroxone)

Fenton's Reaction: $Fe^{+2} + H_2O_2 \longrightarrow FE^{+3} + OH^\circ + OH^-$ (2-4)

Not all dark-based homogeneous AOP are discussed in this ETL since the scope is limited only to light-based AOP. However, the catalyzed hydrogen peroxide AOP is discussed to illustrate the AOP principle. Dark based AOP do not utilize UV light to assist in the degradation of various organic species.

2.2.2.1 Catalyzed Hydrogen Peroxide

Hydrogen peroxide in the presence of a catalyst, e.g., iron, generates hydroxyl radicals which react with organics and reduced compounds for the destruction of organic contaminants. In this method, ferrous solution at 100 to 1,000 mg/L as Fe(IT), (usually in the form of ferrous sulfate) is added to hydrogen peroxide. The ferrous solution is known as the Fenton*s reagent. One hydroxyl group per mole of hydrogen peroxide is generated in this process as shown in equation 2-4.

The hydroxyl radicals are responsible for the initiation of oxidation reactions by attacking the organic compound (RH). A hydrogen atom is either abstracted from the organic compound (such as saturated organic compounds) or added to the organic compound (such as aromatic and olefinic compounds) . The result of hydrogen abstraction or addition is the formation of an organic compound radical (R°)[1,2,21,22]:

$$OH^\circ + RH \longrightarrow H_2O + R^\circ \qquad (2\text{-}5)$$

The organic radical (R) can further initiate several chain reactions. As an example, one of these chain reactions could take place with available hydrogen peroxide to form a less hazardous organic compound, as simplified by the following reaction:

$$R^{\circ} + H_2O_2 \text{ ---- > } ROH + OH^{\circ} \qquad (2\text{-}6)$$

The hydroxyl radicals are known to :

- be less compound-selective,
- have much higher rate constants, and
- achieve enhanced removal rates of organic contaminants.

The reaction rate constants of common organic compounds vs common oxidants and hydroxyl radicals are shown in Table A-2. As shown in Table A-l, the oxidation power of hydroxyl radical is relatively high (only second to fluorine) and is much higher than that of ozone or hydrogen peroxide.

Study of catalyzed hydrogen peroxide using Fenton*s reagent on aromatic compounds, such as phenols, shows that intermediates (aldehydes/carboxylic acids) are formed. These intermediates may also be further oxidized to more stabilized products such as carbon dioxide and water. This process is called mineralization[23]. Intermediate formation is a common occurrence with AOP treatment technologies. The end product of CO_2, H_2O, and salts may be obtained but typically at a higher cost. Some of intermediates are more toxic than the parent compounds, therefore, intermediate products must be considered during the design process.

2.2.2.2 Peroxone

Another promising hydroxyl-radical-based process employs hydrogen peroxide in combination with ozone, termed “peroxone.” The reaction of hydrogen peroxide with ozone forms hydroxyl radicals. This approach has been observed to be more effective than either hydrogen peroxide or ozone alone for the removal of some organic contaminants[21,24].

TABLE A-2

RATE CONSTANTS OF COMMON ORGANIC COMPOUNDS

Compound	O_3	•OH	H_2O_2
Chlorinated Alkenes	10^2 to 10^3	10^9 to 10^{11}	80-800
Phenols	10^3	10^9 to 10^{11}	800
N-containing Organics	10^3	10^9 to 10^{11}	880
Aromatics	10 to 10^2	10^8 to 10^{10}	8-80
Ketones	1	10^9 to 10^{10}	0.8
Alcohols	10^{-2} to 1	10^8 to 10^9	10^{-2}-1
Alkanes	10^{-2}	10^6 to 10^9	10^{-2}

A peroxone system may be the method of choice for systems which inherently resist the absorption of UV light. It may also be applied to treat organic compounds which are nonreactive toward ozone or hydrogen peroxide alone.

2.2.3 Light-Based Heterogeneous AOP

Light-Based Heterogeneous AOP uses UV light with a semiconductor such as Titanium Dioxide (TiO_2) to generate hydroxyl radicals (0H°) and hydrate ions (e_{ap}^-). These are discussed in the chapters 4.

2.2.4 Light-Based Homogeneous AOP

Light-Based Homogeneous AOP combines UV light with either ozone (UV/ozone), or hydrogen peroxide (UV/Hydrogen peroxide) or both UV/Ozone/Hydrogen peroxide to generate hydroxyl radicals.

Another approach exists that uses hydrodynamic cavitation and hydrogen peroxide to generate hydroxyl radicals known as CAV-OX® Process[14].
Homogeneous photolysis involves the use of UV light to irradiate oxidant(s) and contaminated waters. Before discussing the mechanism of the UV/Oxidation process, a brief review of basic concepts of photochemistry is presented.

2.2.5 Basic Concepts of Photochemistry

The UV radiation rays lie between the visible violet light (less than 400 nm) and X-ray wavelength (greater than approximately 180 nm). Three types of TN spectra are identified as: long wave, or UV-A, which lies between 315 - 400 nm; medium wave, or UV-B, which lies between 280 - 315 nm; and shortwave, or UV-C, lying below 280 nm[25]. At wavelengths between (200 to 280) the spectrum has a germicide effect[25,26,27] and can also break the bond (photolysis) between hydrogen and carbon molecules. The UV light spectrum is illustrated in Figure A-1.

2.2.5.1 Photon Energy

Photon energy is defined as a massless elementary particle with one quantum unit of spin that is the carrier of radiant energy (as light or X-ray)[26].

ELECTROMAGNETIC SPECTRUM WITH EXPANDED SCALE OF ULTRAVIOLET RADIATION

FIGURE A-1

(SOURCE 25)

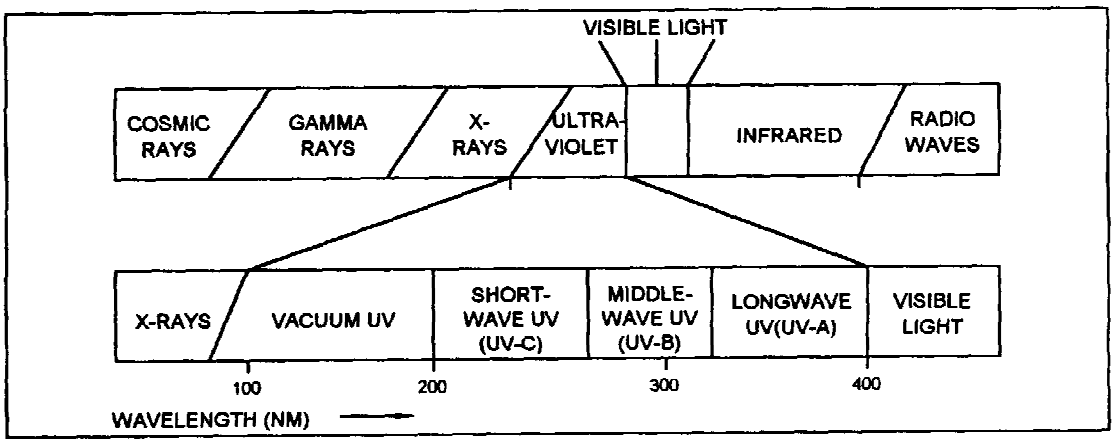

Photolysis involves the interaction of light with molecules to bring about their dissociation into fragments. During the course of photolysis, the energy level excitation occurs by the absorption of photons according to the Einstein equation:

$$E = h< \qquad (2\text{-}7)$$

where E is the photon energy
h is the Planck*s Constant, 6.625×10^{-27} erg-second
< is the frequency of the light,

The light frequency is defined as:

$$< = c/8 \qquad (2\text{-}8)$$

where c is the speed of light, 2.9979×10^{10} cm/sec.
8 is the wavelength of light, nm.

For the bond to be broken in a molecule, the photon energy (E) must be sufficiently high to overcome the molecular bond energy.

2.2.5.2 <u>Light Absorbance and Intensity</u>

The degree of UV absorbance of an organic compound depends primarily on its concentration and extinction coefficient. When a light beam of known wavelength (*8*) enters a medium of path length d, absorbance is defined as:

$$a = , C_i d \qquad (2\text{-}9)$$

where a is the light absorbance (unitless)
, is the molar absorptivity (extinction coefficient) in $M^{1}cm^{-1}$ (per mole-centimeter)
C_i is the molar concentration of organic compound in gram-moles
d is the path length from the light source in cm

The molar absorptivity (extinction coefficient), which is a constant specific to the compound and varies with the wavelength of the light, is a measure of the probability that quantum-molecule interaction will lead to absorption of the quantum. As

the extinction coefficient of a compound (at a certain wavelength) increases, the absorbance of UV light by that compound increases. In general, most organic compounds, as well as hydrogen peroxide, absorb UV light more strongly at lower wavelengths. Figure A-2 illustrates the absorption spectrum of selected pollutants in water and clearly shows the trend to increased absorption at lower wavelengths[28].

In the aqueous phase, extinction coefficients (or molar absorptivity) are similar to the corresponding coefficients in the gas phase for both ozone and hydrogen peroxide. However, in the aqueous phase, the extinction coefficients are generally larger than that of the gas phase.

Equation 2-9 indicates that light absorbance is first order with respect to the concentration of the organic compound. The light absorbance also depends on the presence of other light-absorbing compounds such as suspended materials, some dissolved salts, etc, whose effects have not been included in the equation.

For liquid-phase photolysis, the intensity of the entering light at a distance (d) from the light source can be calculated using Beer-Bouger-Lambert law according to:

$$I_1 = I_0 \, 10^{-a} \qquad (2\text{-}10)$$

where I_1 is the measured intensity at a distance d in $\mu W/cm^2$
I_o is the surface intensity of the lamp in $\mu W/cm^2$
a is the light absorbance as defined previously

Beer-Bouger-Lambert Law applied to measurement of UV intensity is illustrated on Figure A-3.

2.2.5.3 <u>Quantum Efficiency</u>

In photolysis, the efficiency of the photolytic reaction (or quantum yield) is defined as the ratio of the number of molecules of the target organic compound to be destroyed to the number of photons absorbed by the compound, in a fixed time period. Normally, maximum attainable quantum efficiency is unity; however, if the photolysis reaction initiates a chain reaction,

UV SPECTRA OF SOME COMMON POLLUTANTS
FIGURE A-2

(SOURCE 38)

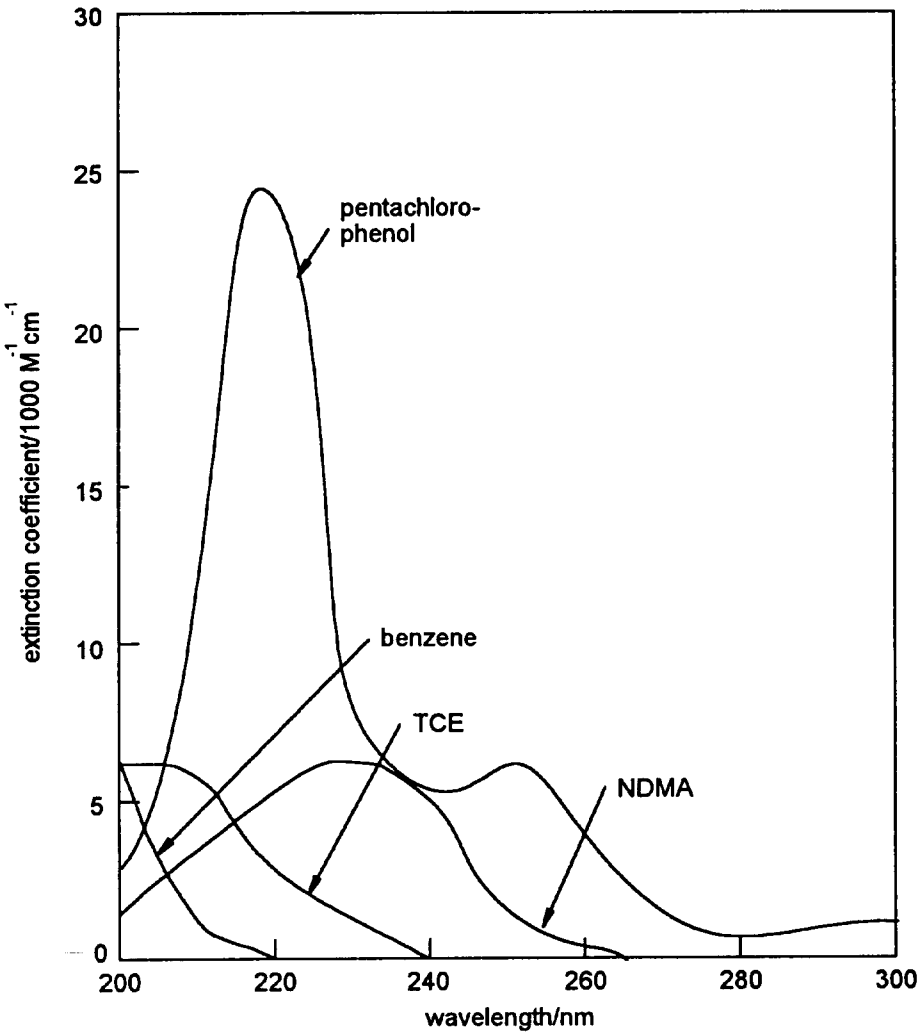

BEER-BOUGER LAMBERT LAW APPLIED TO MEASUREMENT OF UV INTENSITY
FIGURE A-3

(SOURCE 25)

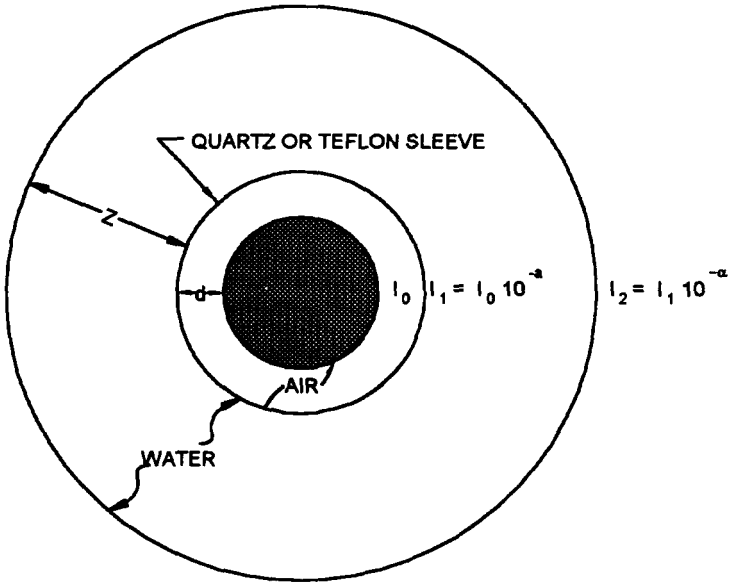

a = air/glass absorbance ($\epsilon c i d$)

α = water absorbance ($\epsilon c i z$)

the quantum efficiency can be considerably greater than unity[28].

Usually, the quantum efficiency of unity could be achieved in gas phase systems. In aqueous phase systems, the quantum efficiency is usually less than that of in the gas-phase systems.

The quantum efficiency of ozone and hydrogen peroxide in the gas phase is 0.99 and 1.0, respectively. The quantum efficiency for the photodissociation of both ozone and hydrogen peroxide is much smaller in the aqueous phase than in the gas phase. In water, the quantum efficiency decreases to 0.61 for ozone and to 0.50 for hydrogen peroxide at a wavelength of 254 nm[28].

2.2.5.4 Absorption Spectrum of Hydrogen Peroxide

The maximum absorption of UV radiation by hydrogen peroxide occurs at about 200 nm, and it decreases as the wavelength increases. Therefore, one major drawback to the use of hydrogen peroxide is its relatively low extinction coefficient. Figure A-4 shows the molar extinction coefficient of hydrogen peroxide in gas phase and aqueous phases.

The extinction coefficient (or molar absorptivity) of hydrogen peroxide at 254 nm is approximately 19 $M^{-1}cm^{-1}$. This low extinction coefficient translates into low absorption rates. Most low-pressure mercury lamps have a dominant emission wavelength at about 254 nm. With these types of lamps, a prohibitively high dosing rate of hydrogen peroxide must be added to the system to generate the required quantity of hydroxyl radicals. However, in UV/Hydrogen Peroxide systems, medium-pressure high-intensity mercury lamps with a wider UV spectrum (180-254 nm) or xenon lamps are used to overcome the low molar absorptivity coefficient of hydrogen peroxide. A comprehensive discussion of UV lamps is presented in Chapter 4.

Photolytic dissociation of hydrogen peroxide to hydroxyl radicals can theoretically occur up to a wavelength of 560 nm.

This is the “Dissociation Threshold Wavelength”. However, the molecule must absorb, if it is to dissociate. Hydrogen

ABSORPTION SPECTRA OF HYDROGEN PEROXIDE IN THE GAS PHASE AND IN AQUEOUS SOLUTION
FIGURE A-4
(SOURCE 28)

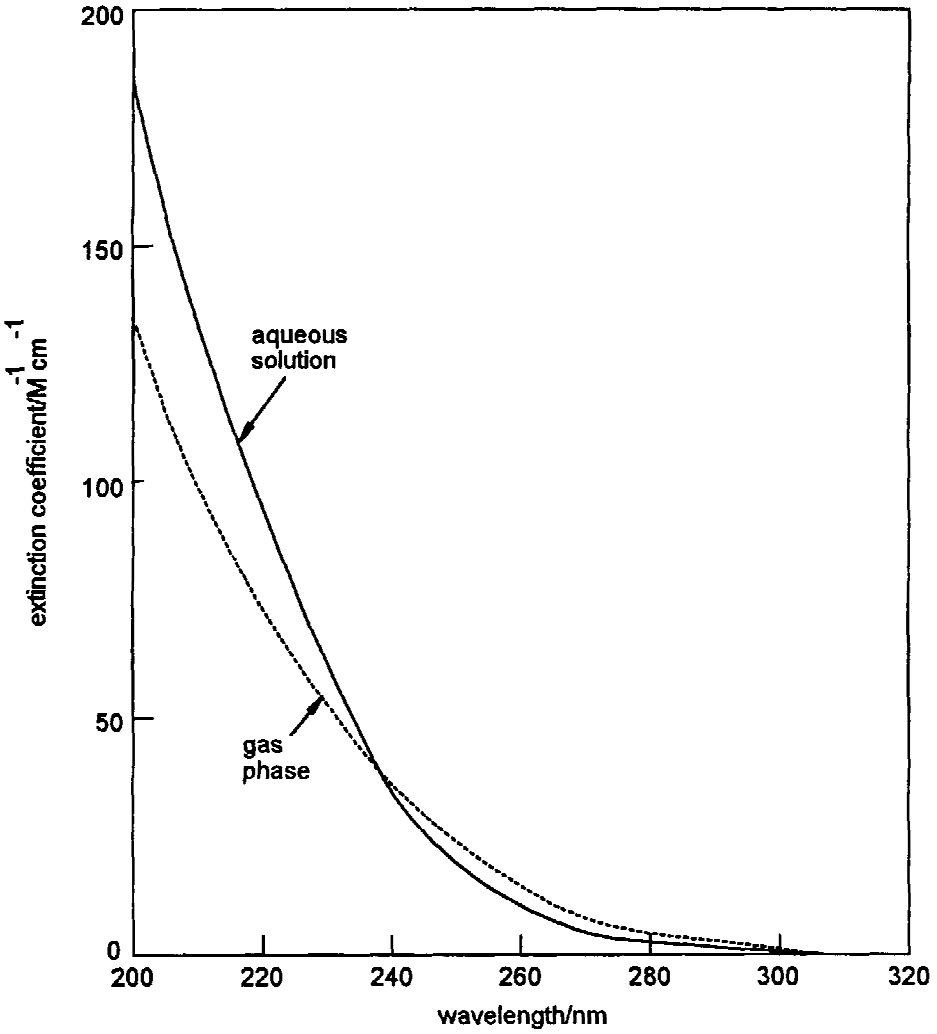

peroxide does not absorb signifivantly above a wavelength of 310 nm. This wavelength is referred to as the “Absorption Threshold”.

2.2.5.5 Absorption Spectrum of Ozone

Ozone has a much higher extinction coefficient than hydrogen peroxide. Figure A-S shows the molar absorptivity coefficient of ozone as a function of wavelength. In the aqueous phase, the maximum molar absorptivity coefficient for ozone is 3,300 $M^{-1}cm^{-1}$ at 260 nm. In the gas phase, however, the maximum extinction coefficient happens at approximately 2,850 $M^{-1}cm^{-1}$ at 257 nm. Due to the high extinction coefficient of ozone, the low pressure mercury lamps could be used effectively in the UV/Ozonation process.

Ozone can theoretically dissociate at wavelengths as high as 410 nm, but ozone does not absorb significantly at wavelength above 330 nm.

2.2.5.6 Mechanisms of UV/Hydrogen Peroxide Oxidation

In the UV/Hydrogen peroxide oxidation process, hydroxyl radicals are formed by the following reaction:

$$H_2O_2 + h< \text{ ---- >} 2\ OH^\circ \qquad (2\text{-}11)$$

The maximum absorbance of UV light by hydrogen peroxide occurs at a wavelength of 200 nm. UV radiation of hydrogen peroxide, at a certain wavelength, produces two hydroxyl radicals per mole of hydrogen peroxide. Thus, hydrogen peroxide delivers the highest concentration of hydroxyl radicals per mole of oxidant compared to Fenton*s reagent (one HO° per mole H_2O_2).

For example, consider hydrogen peroxide photolysis in the presence of t-Butano[29]. Hydroxyl radicals are formed in the presence of UV light according to Equation 2-11. The hydroxyl radical reacts with t-Butanol to form an organic radical according to the following equation:

$$OH^\circ + CH_3(CH_3)_2COH \text{ ---- >} CH_2(CH_3)_2COH^\circ + H_2O \qquad (2\text{-}12)$$

ABSORPTION SPECTRA OF OZONE IN THE GAS PHASE AND IN AQUEOUS SOLUTION
FIGURE A-5

(SOURCE 28)

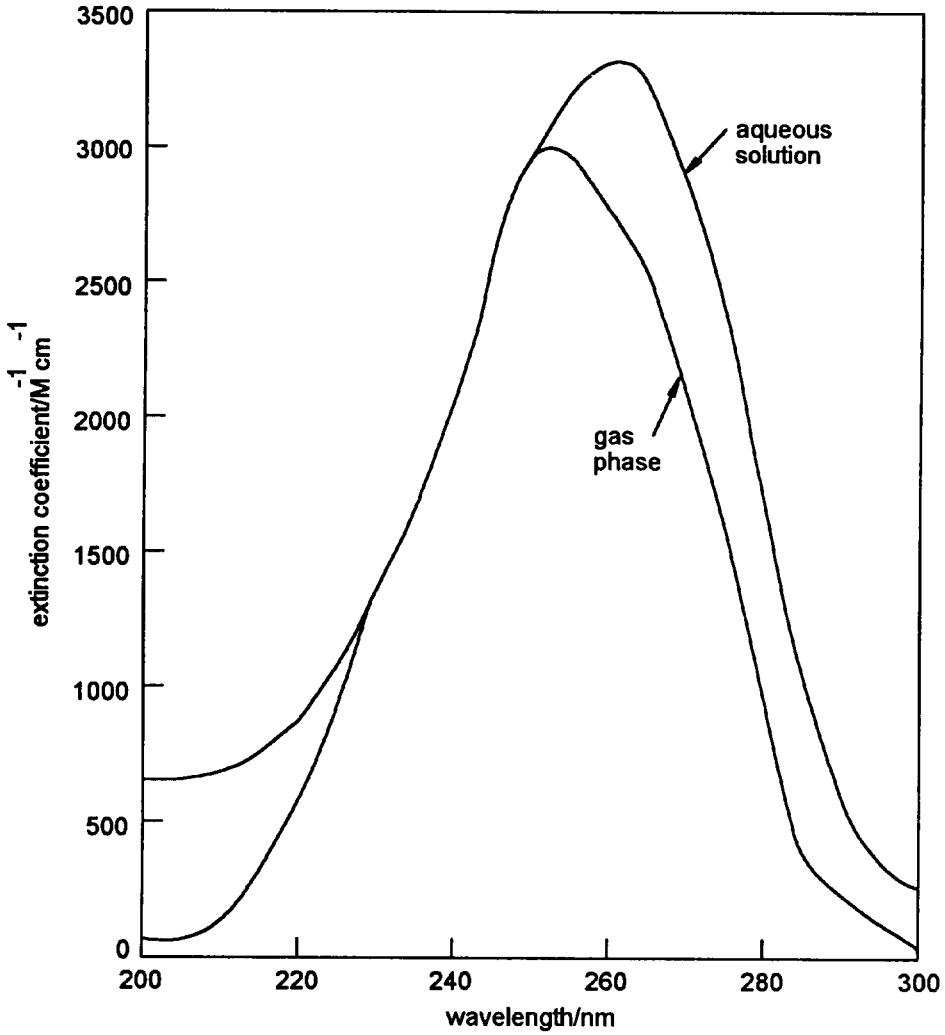

The organic radical further reacts with the dissolved oxygen to yield an intermediate organic compound:

$$O_2 + CH_2(CH_3)_2COH^\circ \text{ ---- > } O_2CH_2(CH_3)_2COH \qquad (2\text{-}13)$$

The intermediate product further reacts to form more hydrogen peroxide and other products:

$$2\ O_2CH_2(CH_3)_2COH \text{ ---- > } H_2O_2 + \text{Other Products} \qquad (2\text{-}14)$$

2.2.5.7 <u>Mechanism of UV/Ozone Oxidation</u>

UV photolysis of ozone at a wavelength of 253.7 nm, in the aqueous phase, yields hydrogen peroxide via Equation 2-15 followed by reaction of the conjugate base, hydroperoxy anion (HO_2^-), with ozone to yield superoxide ($.O_2^-$) and hydroxyl radical via Equation 2-17[29]:

$$O_3 + H_2O + h< \text{ ----> } O_2 + H_2O_2 \qquad (2\text{-}15)$$
$$H_2O_2 + H_2O \text{ ----> } H_3O^+ + HO_2^- \qquad (2\text{-}16)$$
$$O_3 + HO_2^- \text{ ----> } O_2 + \bullet O_2^- + OH^\circ \qquad (2\text{-}17)$$

Superoxide reacts with ozone to form hydroxyl radicals:

$$O_3 + \bullet O_2^- + H_2O \text{ ----> } 2O_2 + OH^- + OH^\circ \qquad (2\text{-}18)$$

The formed hydroxyl radicals enter a competing reaction with ozone to form more superoxide according to:

$$O_3 + OH^\circ + H_2O \text{ ----> } O_2 + H_3O^+ + \bullet O_2^- \qquad (2\text{-}19)$$

In the absence of organic compounds, Equations 2-15 and 2-16 are the initiation reactions, with equations 2-17 through 2-19 simply representing the chain photo-decomposition of ozone. When no organic compound is available to consume the hydroxyl radical, the photo-decomposition reactions of ozone proceed with high quantum yields.

In the presence of sufficient or excess organic compounds (concentration greater than 0.0001 moles), the hydroxyl radical

will abstract one hydrogen atom (according to equation 2-5) to form a water molecule and an organic radical. This is, in turn, followed by a reaction between the organic radical and oxygen to yield organic peroxy radicals:

$$R^{\circ} + O_2 \text{ ----> } RO_2\bullet \qquad (2\text{-}20)$$

These radicals could either photolyze to more stable organic molecules or regenerate further superoxide which reenters the system by reaction with ozone via Equation 2-18. Repetition of the above process will ultimately lead to complete destruction of the organic compound.

As an example, the proposed mechanism of methanol degradation is discussed below. The reaction mechanism involves an initial attack of the hydroxyl radical on methanol to abstract a hydrogen atom[28] to give hydroxymethyl radical ($\bullet CH_2OH$). The resulting radical reacts with dissolved oxygen to initiate a series of oxidative reactions as shown in Figure A-6.

The hydroxymethyl radical reacts with oxygen to form formaldehyde. The hydroxyl radical attack on formaldehyde leads to formation of intermediate compounds and other radicals and finally to formic acid. In the presence of more hydroxyl radicals, formic acid is eventually degraded to water and carbon dioxide.

2.2.5.8 <u>Kinetics of Oxidations Reactions</u>

The kinetics of chemical oxidation reactions is generally a function of the contaminant concentration. The UV/Oxidation reaction rate can be represented by:

$$-r_a = kC_a \qquad (2\text{-}21)$$

where

$-r_a$ is the rate of oxidation of contaminant a, mg/L/minute
k is the reaction rate constant, minutes^{-1}
C_a is the concentration of contaminant, mg/L

Equation 2-21 indicates a pseudo first-order reaction rate; i.e., the rate of oxidation of contaminant is directly

MECHANISM OF METHANOL DEGRADATION
FIGURE A-6
(SOURCE 38)

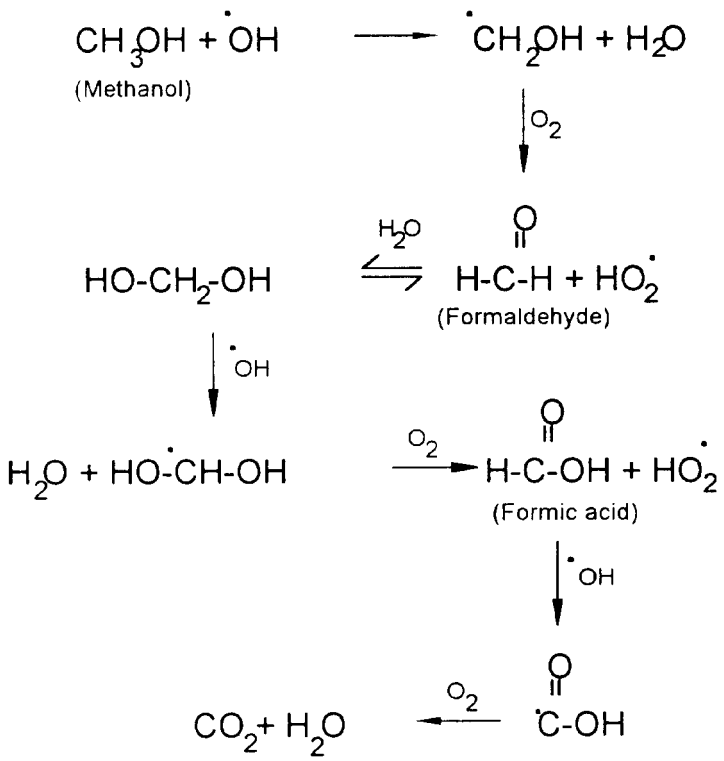

proportional to the contaminant concentration. The rate equation is independent of the reactor configuration.

The above equation could be integrated and rearranged in terms of influent and effluent concentrations of the contaminant:

$$C_e = C_i \, e^{-kJ} \qquad (2\text{-}22)$$

where

C_e is the contaminant concentration in the effluent, mg/L
C_i is the contaminant concentration in the influent, mg/L
J is the retention time, minutes
e is the base of the natural logarithms, equal to 2.71828
k is the reaction rate constant, min^{-1}

The retention time refers to the length of time the contaminant in the water is exposed to the UV light within the reactor. The rate constant is a measure of how fast the oxidation reaction proceeds. The oxidant (ozone or hydrogen peroxide) is not a variable in the above equation; however, the concentration of the oxidant directly determines the concentration of the hydroxyl radicals, and therefore, the speed of the reaction.

The rate constant is an empirical constant which must be determined for every wastewater system at the specified oxidant concentration. The rate constant could be derived by plotting retention time versus $\ln(C_i/C_e)$ with UV dose (kWh/1000 gals) predetermined. The UV dose is derived from retention time, reactor volume and lamp power. The slope of the line is equal to the rate constant.

Contaminants which are easily oxidized are expected to have higher rate constants than the difficult-to-oxidize contaminants. For instance, a rate constant of 15 minutes[-1 is reported for perchloroethylene (PCE) which is a chlorinated organic compound with double bonds, using a UV/Hydrogen Peroxide system[30]. For chlorinated organics without double bonds, such as methylene chloride and 1,l,l-trichloroethane, rate constants of 0.67 min^{-1} and 0.29 min^{-1} are reported (for the same oxidation system) respectively[30].

2.2.5.9 Intermediate Compounds

The reaction mechanism of AOPs is complex and has not been developed for all organic compounds. The reaction mechanism depends on the organic and inorganic species present and their scavenger affect, their concentration, as well as the solution pH. In the course of mineralization of organic compounds to carbon dioxide, intermediate compounds of progressively higher oxygen-to-carbon ratios may be formed[31]. For instance, oxidation of even simple molecules such as chloroform involves the formation of intermediates[28]. Such intermediates make the conversion a multi-component process, even if single contaminant exists in the feed.

Formation of intermediates may be associated with a change in the physical appearance of the water or a change in the system parameters. For instance, formation of intermediate(s) in UV/Hydrogen Peroxide treatment of aromatic compounds was ascertained by appearance of brown color in the solution[32]. In the oxidation of chloroform and 1,3,5-trinitrobenzene, the formation of by-products was determined from the system*s pH dropping by one pH unit[33].

Oxidation of organic compounds generally proceeds according to the following pattern:

Organic Compound	--->	Intermediates Aldehydes/Carboxylic Acids	--->	Carbon Dioxide

Since the formation of intermediate reactions may be harmful to the environment or as toxic or more toxic than the organic compound itself, the removal of any toxic intermediates that are formed must be demonstrated.

All AOPs have the potential to carry the original organic compound, through a series of increasingly oxidized intermediates, to carbon dioxide. If complete mineralization is desired, analysis should be conducted on the treated water to demonstrate not only complete disappearance of the organic compound but also appearance of carbon dioxide.

In UV/Hydrogen peroxide treatment of aromatic compounds, the formation of intermediates was ascertained by the increase in the UV light absorbance[34]. By adding sufficient hydrogen peroxide and extending treatment time, the absorbing compounds could be eliminated. Analyses of selected compounds by HPLC and GC/MS confirmed the formation and destruction of several intermediates.

Ozone chemistry suggests that organic peroxides, unsaturated aldehyde and epoxides could be formed in the ozonation reactions[24]. For example, oxidation of malathion by UV/Ozone will generate highly refractory species of oxalic and acetic acid, which can be further oxidized to carbon dioxide and water[1].

3.0 UV/OXIDATION APPLICABILITY

AOPs have been applied to a wide variety of wastewaters with different physical and chemical characteristics. UV/Oxidation has been demonstrated extremely effective in total destruction of toxic and bio-refractory substances with the final innocuous products as chloride, sulfate, phosphate, carbon dioxide and water. UV/Oxidation can economically treat a broad range of contaminants in concentrations ranging from several hundred ppb to several hundred ppm. In conjunction with photocatalysts, some systems can treat contaminant concentrations of several thousand ppm. UV/Oxidation may be used either as a stand-alone unit for full treatment, or in a combined treatment train as preliminary treatment or post-treatment to biological treatment and in some cases, to air stripping and/or activated carbon.

The following contaminants are reportedly treatable by UV/Oxidation.

Contaminant Type	Examples
Aromatic Hydrocarbons	Benzene, Toluene, Ethylbenzene, Xylene
Pesticides	DDT
Wood-Preserving Compounds	Pentachlorophenol, Phenol
Chlorinated Solvents	PCE, TCE, Methyl Chloride, DCE, DCA, TCA, and Chloroform
Ordnance Compounds	TNT, RDX, HMX, Nitroglycerine, Dinitrotoluene
Other	Hydrazine, Vinyl Chloride, PCB*s

The overall economics of the treatment and the structure of organic compounds will determine whether the UV/Oxidation should be the sole method of treatment or used in conjunction with other treatment methods. These will be discussed in the following chapters.

3.1 SOME PERFORMANCE DATA ON STAND-ALONE UV/OXIDATION SYSTEMS

Table A-3 presents some performance data on UV/Oxidation systems. The performance data are from studies with pilot- and bench-scale UV/Oxidation systems, and from existing full-scale systems as reported in the literature. All references to retention time or residence time, in the following sections, refer to treatment time and liquid hold-up in the reactor, and not gas or gas and liquid.

3.2 COMBINED (SHARED) TREATMENT TRAIN

3.2.1 As Preliminary to Primary Treatment

In combined treatment, UV/Oxidation process is used as a unit operation of the treatment processes in the overall treatment train.

UV/Oxidation may be used to remove selected compounds prior to another treatment process. In such cases, AOP is used as a pre-treatment step. For example, AOPs may be used to treat refractory compounds prior to biological treatment to increase biodegradation potential. Partial UV/Ozonation of refractory compounds has been shown to increase their biodegradability.

AOPs may also be used to remove certain target organic compounds prior to carbon adsorption. This combined treatment train will reduce the amount of carbon which may prohibitively required for treatment by carbon alone[3].

UV/Hydrogen Peroxide treatment has also been used in conjunction with air stripping to remove chlorinated compounds such as perchloroethylene (PCE), 1,1,1-Trichloroethane (TCA) and methyl chloride from wastewater streams[30]. Since PCE is an easy-to-oxidize compound, UV/Oxidation can then be used to effectively destroy PCE in a short time (<1 minute). On the other hand, TCA and methyl chloride, which degrade very slowly with UV/Oxidation will require a long detention time, making this technology expensive. In this case, UV/Oxidation and air stripping used in series, would be the best approach. First, PCE is removed in a UV/oxidation system; next, water is further treated by an air stripper for the remaining chlorinated compounds resistant to oxidation. In this system, UV/Hydrogen Peroxide

TABLE A-3a
AOP PERFORMANCE DATA

Tabulated Results of UV/Peroxide Systems

Contaminant	Technology	Influent Conc. µg/l	Effluent Conc. µg/l	Reference
BTEX Cl-Benzene Ethylbenzene	UV/H_20_2 perox-pure™	36,200 8,800 3,300	BDL BDL BDL	35
1,4-Dioxane	UV/H_20_2 perox-pure™	1 ,800	20	36
Methyl Chloride 1 ,1 -DCA 1 ,2-DCE 1 A ,1-TCA TCE PCE	UV/H_20_2 perox-pure™	1 1 187 116 71 272	BDL BDL BDL 65 BDL BDL	35
TCE 1 ,2-DCE Chloroform	UV/H_20_2 perox-pure™	66.3 6.2 2.1	BOL BDL BDL	35
PCBs	UV/H_20_2 perox-pure™	2.8	0.064	30
Hydrazine Acetone Phenol Aniline Bis. 2-EHP TOC	UV/H_20_2 perox-pure™	180,000 41 14 730 170 31,000	<10 BDL BDL BDL BDL 2,000	35
1,1 DCA DCE PCE Vinyl chloride	UV/H_20_2 Rayox®	60 300 200 240	<3.5 < 70 <5 <2	38
PCP	UV/H_20_2 Rayox®F	1,000	<10	38
BTEX TPH	UV/H202 Rayox®	5,000 4,000	< 5 < 1	38
DMA (dimethylamine) DMNA (Dimethylnitrosamine) UDMH (Unsymerical dimethylhydrazine)	UV/H_20_2 Rayox®R	30 600 20 1400	< 0.5 < 0.5 < 0.014 < 200	38

TABLE A-3b
Tabulated Results of UV/Ozonation Systems

Contaminant	Technology	Influent Conc. µg/l	Effluent Conc. µg/l	Reference
TOE 1-2 DCE PNA's	UV/0_3	160,000 114,000 51	1 1 BDL	34
TCE PCE	UV/0_3	330 160	3.2 5.5	34
TCE 1 ,1-DCA 1,1 ,1-TCA	UV/0_3	52 11 3.8	0.6 3.8 0.4	36
Iron Complexed Cyanide	UV/0_3	8,000	100	43
TOC	UV/0_3 pH=5	140,000 420,000	24,500 54,600	
Benzene Toluene Xylene Ethylbenzene TCE	CAV-OX®] Cavitation High-energy process	226 35.63 86.47 3.5 2,010	87 6.63 8.84 1.15 15.4	
TCE MEK Acetone Benzene	Solox Advanced Oxidation Process	22 31 1 7 5	<1 <1 <1 <1	69
1,2,4 Trichlorobenzene PCP	Sun River SR2000™	260 1400	10 BLT	41
Benzene Ethylbenzene Toluene Xylene	Sun River SR 2000™	160,000 120 80 41	10 6 3 2	41
TOC Nuclear facility Vapor recovery	TiO_2 photocatalyti c Oxidation	150,000	2,700	42
Benzene Toluene Ethylbenzene Total BTEX MTBE	TiO_2 photocatalyti c Oxidation	450 600 1 7 1677 11,000	120 92 130 342 3700	42

TABLE A-3c
Tabulated Results of UV/Peroxide/Ozone Systems

Contaminant	Technology	Influent Conc. mg/l	Effluent Conc. mg/l	Reference
Metal Plating Complexed cyanide	$UV/H_20_2/0_3$	350-450	20	
BTEX	$UV/H_20_2/0_3$	14	0.0002	
TNT and RDX	$UV/H_20_2/0_3$	100	< 1	
Oil & Grease	$UV/H_20_2/0_3$	60-100	15	
VOCs inclding: TCE DCE Methyl chloride	$UV/H_20_2/0_3$	7	0.020 0.002	
Org. solvents, Pesticides TCE Vinyl chloride DCE, PCBs	$UV/H_20_2/0_3$	0.280- 0.920 0.051- 0.145 0.42-.068	Meet effluent limits	
Methanol TOC	$UV/H_20_2/0_3$	200 75	3.2 1.2	105
Methylene Chloride	$UV/H_20_2/0_3$	100	7.6	105
1 ,4-Dioxane Ethylene Glycol Acetaldehyde	$UV/H_20_2/0_3$	700 1000 1000-5000	50	105
Phenol PCP (Pentachlorophenol)	$UV/H_20_2/0_3$	1 50 10,000	40 1 00	
DIMP (diisopropylmethy Iphosphonate)	$UV/H_20_2/0_3$	2.500	< 0.01	

followed by air stripping was found to be more cost-effective than either method of treatment used separately.

3.2.2 As Post Treatment

In some water treatment processes, meeting very stringent limitations on some organic compound(s) may not be technically possible. For instance, achieving low levels of polychlorinated biphenyls (PCBs) in water through carbon adsorption is not feasible. With a UV/Ozone system as polishing unit, low levels of PCBs in water can be achieved[3].

In stripping systems, achieving very low levels of organic compounds may require high flow rates of air or steam; hence, a large stripping tower with air emission controls. In such a case, UV/Oxidation systems may be employed as a post-treatment unit to reduce the size of the air stripper. The water is treated first with air stripping. The partially treated effluent from the stripper can then be treated further with an AOP. With this treatment scheme, the capital and operating costs of the overall treatment should be economically justified.

Another reason for utilizing AOP in a post treatment or polishing step is to lower the chemical dosage requirements. UV/Oxidation is a non-selective process, therefore pretreatment of the waste stream prior to using the AOP may lead to an economic benefit.

3.3 LIMITATION OF UV/OXIDATION POCESSES

UV/Oxidation Process has many advantages as described throughout the ETL, however, the process has some limitations which include:

! Poor performance on aqueous streams having high TN absorbance background. High turbidity does not affect direct chemical oxidation.

! Poor performance on streams having high carbonates and bicarbonates (>400 ppm as carbonate) and dissolved salts, because these species act as free-radical scavenger[21].

! Volatile organic compounds having high Henry*s Constants and low oxidation potential may be stripped out rather than destroyed (i.e., TCA in UV/Ozone). Treatment option of those compounds may be limited to UV/H_2O_2 treatment with the addition of a catalyst.

4.0 DESIGN CONSIDERATIONS

The design of a UV/Oxidation system requires special considerations. These include:

- Safety;
- Process performance interferences;
- Collection of required data;
- Mixing requirements;
- Temperature control;
- Oxidant requirements;
- Catalysts; and
- Combination with other processes.

These issues are discussed in the following subsections.

4.1 SAFETY

Increasing awareness of health and safety issues has occurred in recent years as a natural outgrowth of operational and maintenance experience in facilities of all types, including water treatment facilities. Therefore, safety is a primary consideration in designing or selecting a UV/Oxidation system for treating a hazardous waste. The health and safety requirements identified in 29 CFR 1910.120, 1910.145 and ER 385-1-92 must also be satisfied.

Engineering and design of an AOP must consider the following safety aspects:

- Safety for the AOP unit,
- Facility-wide safety, and
- State and local safety regulations.

Each of these issues is discussed below.

4.1.1 Safety for AOP unit

Safety considerations for the AOP unit involve protection from high temperature surfaces, high voltage hazards, UV radiation hazards, and noise hazards.

4.1.1.1 High Temperature Hazards

Some AOP systems generate heat above 100°F on both the process equipment and the treated water. Cooling system such as blower and or heat exchanger may be required to cool the process water. High temperature surfaces must be properly insulated to protect plant personnel from direct contact with high temperature surfaces.

4.1.1.2 High Voltage Hazards

UV/Oxidation systems usually operate on high voltage inside the reactor, e.g., low-vapor mercury lamps operate at 400-600 volts, medium-vapor mercury lamps operate between 1,000 to 3,000 volts. Therefore, high voltage components should not be installed in areas where they may become wet; the UV unit should have safety features to protect personnel from both the UV radiation and the high voltage supply. Safety interlocks should be installed inside the cover panels of the UV lamps; mechanical interlocks are required on the main door of the power supply to the UV unit.

4.1.1.3 Ultraviolet Radiation

The UV lamps in the reactor emit dangerously high levels of UV radiation. Designs should include safety features to eliminate the risk of exposing workers to such a hazard. To protect personnel from radiation, the reactor vessels should have covers equipped with safety interlocks to shut off the UV lamps when the cover is open. Many reactor have side glasses provided on the reactor vessel for viewing during operation. This is not a safety hazard in that the glass viewing port effectively prevents transmission of UV light.

4.1.1.4 Noise Hazards

AOP systems that use air as process gas for the ozonator may create noise hazards when air compressors are included. Designs should ensure maximum noise levels are not exceeded. Specification of maximum noise levels for each system component is desirable. These include gas preparation devices, gas dryers (refrigerant and desiccant) and ozone generators. Occupational Safety and Health Administration (OSHA) 29 CFR 1910.95 and USACE regulations should be followed for designing controls to keep noise levels from exceeding the ACGIH TLV of 85 dBA (8 hr)

4.1.2 Facility Wide Safety

Facility-wide safety must involve protection from hazards associated with mercury spills, mercury lamp disposal, catalyst disposal, if used, chemicals (acid or caustic) and oxidants (hydrogen peroxide and ozone) handling.

4.1.2.1 Mercury Spill

The UV lamps are charged with small amounts of mercury. If a lamp breaks, then the mercury spilled may constitute a health hazard. Therefore the Health and Safety Plan should address mercury spill clean-up procedures, and mercury spill kits should be provided at the site.

4.1.2.2 UV Lamp Disposal

UV lamps age with time. During routine maintenance, many lamps will be replaced and old ones should be disposed of. Most vendors and manufacturers accept used mercury lamps for recycle or disposal. If this option is not available in the contract, current regulations on solid and toxic waste disposal should be followed for safe disposal of old UV lamps.

4.1.2.3 Catalyst Disposal

Some AOP systems use catalysts within the process to increase oxidation reaction kinetics. These catalysts will stay in the process or will be recovered for reuse[17,18,40,41]. UV/Ozone use catalysts in the ozone decomposer for the destruction of ozone and VOCs in the off-gas streams[21,42]. Some catalysts contain toxic materials which require exhausted catalysts be disposed of in accordance with the current regulations. Catalysts type and applications are discussed in section 4.8.

4.1.2.4 Hydrogen Peroxide Storage and Handling Facility

Hydrogen peroxide solutions are commercially available at concentrations ranging from 30 to 70 percent by weight. Hydrogen peroxide reacts violently with organics. If contact with body skin, hydrogen peroxide irritates and possibly causes chemical and/or thermal burns on the skin. In contact with eyes, hydrogen peroxide solutions can cause severe injury or even result in blindness. Storage and handling equipment for hydrogen peroxide should provide safeguards designed according to the recommended

practices. Safety shower and eye wash should be provided near hydrogen peroxide equipment.

Secondary containment is recommended for hydrogen peroxide storage areas. Safety measures and containment should also apply to the storage of other chemicals such as acid, caustic and catalysts that may be used in the treatment processes. Secondary containment should be independent for each of the hazardous materials being stored to prevent from mixing with each other materials if holding tank integrity is compromised. As part of a spill and release plan, containment is often recommended for the tank area and the floor under the AOP unit area to collect any potential leakage and or spills. The water collected should be recycled back to the headwork of the plant for subsequent treatment. In some cases more stringent spill control may be required.

4.1.2.5 Gaseous Ozone Exposure

OSHA regulations set the exposure limit for ozone at 0.10 ppmv (8 hour TWA) and 0.30 ppmv (short term exposures limit, STEL) . Bad seals may allow ozone to leak from the ozonator. Excessive fouling of the residual ozone controller (ozone destruction unit) can also raise the level of ozone emission in the ambient air. For safety, use the STEL as the level that will require immediate action be taken within the treatment plant facility to reduce ozone levels in the work-place atmosphere. The following points should be monitored for ozone exposure:

! Down-stream of the ozonator; and

! Occupied areas within the immediate vicinity of the treatment system to assure that possible leaks of ozone into the atmosphere are detected.

OSHA regulations 29 CFR 1910.145 requires that a notice must be posted at the entrance of the ozonator facility, which states the following:

OZONE WARNING!
IRRITANT GAS
ADEQUATE VENTILATION REQUIRED

AVOID PROLONGED OR REPEATED
BREATHING OF OZONE

4.1.3 State and Local Safety Regulation

The designer of an AOP system must know all applicable state laws. Most states are authorized to set their own standards; many states may have regulations more stringent than those in RCRA or CERCLA. The stricter regulations must be followed.

4.1.4 Other Safety Considerations

Other safety considerations for an AOP system include:

- Room ventilation,
- Safety railing,
- Remote operating consoles,
- Area and sign lighting,
- Flood protection, and
- Surveillance and intrusion detection systems.
- Confined space entry should be limited to the greatest extent possible but if it can not be avoided, refer to the U.S. Department of Health and Human Services (NIOSH) Publication No.87-113, A Guide to Safety in Confined Spaces.

4.2 PROCESS PERFORMANCE INTERFERENCES

A number of process parameters affect the performance of UV/Oxidation systems. The effects of these parameters are wastewater specific and vary from one UV/Oxidation system to another. The optimum conditions should be individually determined for each system through treatability studies and/or bench-scale testing.

In general, the process parameters can be grouped into the following categories:

- Influent characteristics,
- Operating conditions,
- Maintenance requirements, and
- Treatment goals.

4.2.1 Influent Characteristics

Influent wastewater characteristics include parameters such as influent pH, background of UV absorbance, chemical structure and concentration of contaminants, free radical scavengers, water stability, and color. Other influent characteristics of concern are suspended solids, soluble metals, and oil and grease. The following paragraphs discuss these specific constituents.

4.2.1.1 Influent pH Level

The optimum condition for using UV/Hydrogen peroxide, UV\Ozone, and combination systems is different dependent on the wastewater. The photo-dissociation of hydrogen peroxide is independent of pH; however, the efficient use of hydroxyl radicals is pH dependent. Influent pH level controls the equilibrium among carbonate, bicarbonate and carbonic acid. This equilibrium is important to treatment efficiency because both carbonate and bicarbonate are hydroxyl radical scavengers. The rate constant for carbonate and bicarbonate with hydroxyl radical is $3.9 \times 10^{8} M^{-1} s^{-1}$ and $8.5 \times l0^{6} M^{-1} s^{-1}$, respectively. Hence, carbonate is a more efficient scavenger of hydroxyl radical than bicarbonate[28]. If water has high carbonate and bicarbonate alkalinity (greater than 400 mg/L as $CaCO_3$), the pH should be adjusted downward to approximately pH 4. This is done by adding equivalent quantities of acid to the water prior to treatment. The carbonate and bicarbonate ions become unstable at this pH and will evolve as CO_2. Since UV/Hydrogen Peroxide treatment is more effective at acidic pH, lowering the water pH to a range of 4 to 6 to shift the equilibrium toward carbonic acid formation and consequently reduce the carbonate and bicarbonate concentrations should benefit the UV/Hydrogen Peroxide treatment. However, depending upon economics of individual water, in some cases pH adjustment is more costly than overcoming the affect of higher $CaCO_3$. Generally, pH adjustment requires neutralization for discharge.

UV/Ozone treatment is generally more effective at basic pH. High pH values tend to generate more hydroxyl radicals, as illustrated by Equations A-15 through A-19. Studies with different wastewaters indicate that the rate of ozonation is much more rapid at higher pH than at lower pH. Because of the instability of ozone at high pH, higher ozone concentrations are

required to maintain the desired ozone concentration in the liquid wastewater. In practice, UV ozone treatment is generally best at neutral or slightly acidic pH[19].

Since pH changes as wastewater travels through the UV/Oxidation process during the treatment, pH control during the UV/Ozone treatment is not desirable, because organic acid is an intermediate product from all organic material. For example, treating pentachlorophenol (PCP) with UV/Ozone at pH 7-8 will release the chlorine as hydrochloric acid (HCL), and with carbon structure of PCP going to organic acid. The pH drops rapidly because of acid formation but rises again as organic acids are further oxidized to carbon dioxide, as evidenced by decreasing TOC concentrations in the water. The final pH is around 5 as result of remaining unoxidized HCl which has been formed[1].

Similarly, the treatment of groundwater contaminated with several VOCs using $UV/O_3/H_2O_2$ technology showed a pH increase from 0.5 to 0.8 units after the treatment. This increase is due probably to the reaction between 0H! and bicarbonate ion in which hydroxide ions are produced[33].

When metals are present in the water, proper pH adjustment becomes critical. Depending on the metals present, pH adjustment may form soluble or insoluble metal hydroxides which may require additional equipment for solids removal prior to the UV reactor.

4.2.1.2 <u>UV Absorbance Background</u>

The UV absorbance background of the water is a measure of the translucency of the wastewater between a wavelength of 200 nm and 400 nm. It is a critical influent characteristic since the lower the UV absorbance, the lower the UV requirement for a given duty. The use of ozone can be cost-effective especially for water with high background UV absorbance. UV absorbance background information is useful in selecting a pretreatment system and specifying oxidant type and dosages.

4.2.1.3 Chemical Structure and Concentration of Organic Contaminants.

Chemical Structure: Under a given set of operating conditions, contaminant removal efficiencies depend on the structure of contaminants to be treated. Some contaminants are easy to oxidize, others are refractory to treatment and would be difficult to remove.

The UV/Oxidation process generate 0H! which aggressively attack all organic compounds. The rate of destruction by 0H! is proportional to the rate constant for the contaminant with 0H! Since organic compounds with double bonds (unsaturated compounds such as aliphatics, aromatic compounds) have high rate constant with 0H!, UV/Oxidation is particularly effective to treat chlorinated alkenes such as toluene and benzene, chloroalkenes such as trichloroethylene (TCE) , perchloroethylene (PCE) and vinyl chloride.

Saturated organic compounds (single bonds compounds) such as 1,1-dichloroethane (1,1-DCA) , 1,1,1-trichloroethane (TCA) tetrachloride, and chloroform have smaller rate constants with OH! and therefore are more difficult to destroy. Direct photolysis attack of these compounds by UV (not by 0H!) is, therefore, especially important since treatment of these wastewaters with UV/Ozone or UV/Hydrogen peroxide would require a longer detention time, a high UV dose and possibly a catalyst[12,17].

UV/O_3/H_2O_2 has high removal efficiencies for 1,1-dichloroethane (1,1-DCA) and 1,1,1-trichloroethane (1,1,1-TCA). However, the removal is likely to occur primarily by stripping due to high Henry*s Law constants of these compounds[11]. Other organic compounds with single bonds and low Henry*s Law constants, such as diethylamine would be difficult to remove because they are not easily oxidized nor stripped[33].

As a general rule, organic compounds with double bond are easy to oxidize while organic compounds with Henry*s constant greater than 10 atm/mol fraction are considered easy to strip. Oxidation potential and stripping potential at standard

conditions of several organic compounds are presented in Table A-4.

Concentration: Contaminant concentrations usually effect the use of power (kW) of the treatment system, and the treatment system effectiveness. High contaminant concentrations require high UV and oxidant dosage and/or a longer detention time. Depending on the complexity of the organic, initial contaminant concentrations will effect the treatment performance. Pollutants with only one or two carbon atoms show little or no effect on initial concentrations. Those pollutants with more carbon atoms such as phenols, would show significant effect on the system performance at high initial concentration. For example, treating water contaminated with high concentrations of phenols > 2000 ppm, will not be effective with UV/Oxidation alone since, at this phenol concentrations, the COD is too high (>5000) and the UV transmittance is insignificant. The treatment will be more manageable with sequential treatment with the first stage using Fenton*s reagents to reduce phenols to below 200 ppm followed by second stage using UV/Oxidation.

Generally, for highly contaminated water, some AOP systems operate in a flow-through-with-recycle mode to achieve a longer detention time, in which part or all of the effluent is recycled back through the oxidation unit to improve overall efficiency. AOP systems that use high intensity UV lamps, and long detention time will generate high heat in the reactor and a cooling system may be required.

4.2.1.4 Free Radical Scavengers

Since the AOPs combine UV and oxidants to generate free hydroxyl radicals ($OH^{!}$), superoxide-anion ($O2^{-}$), and hydroperoxy-radical ($OH_2^{!}$) for achieving destruction of contaminants, as discussed in Chapter 2, any other species that consumes free radicals, leaving fewer of them available to react with target compound, is considered a scavenger and an additional energy load for the system. Some of the more common scavengers include humic materials, chloride ion ($C1^{-}$) , carbonate or bicarbonate ions, nitrites, sulphites (SO_3^{-2}), sulphides (S^{-2}) , bromides, cyanides, alkyl groups, and tertiary alcohols([21,28]).

4.2.1.5 Water Instability

TABLE A-4

Henry's Law Constants for Selected Compounds

Compound	Formula	Henry's Constant H_M ATM - m^3/mol @25°C	Stripping Potential	Oxidation Potential
Vinyl chloride	CH_2CHCL	6.38	Easy to Strip	Very Easy to Oxidize
Trichloroethylene	$CCHCL_3$	$1.0 \times 10^{-}2$		
Pentachlorophenol	$C_6(OH)CL_5$	2.1×1.0^{-6}		Moderately Easy to Oxidize
1,1,1-Trichloroethane	CCH^3CL^3	7.0×10^{-3}		
Toluene	$C_6H_5CH_3$	6.0×10^{-3}		
benzene	C_6H_6	4.0×10^{-3}		
Chloroform	$CHCL_3$	3.0×10^{-3}	Difficult to Strip	
1,1,2-Trichloroethane	CCH_3CL_3	7.7×10^{-4}		
Bromoform Dieldrin	CHBr3	6.3×10^{-3}		
Dieldrin	--	1.7×10^{-8}		
Source 80				

In some waters, with a small change in pH, temperature or redox potential, soluble inorganic chemicals such as calcium, iron and manganese will precipitate out of solution. The net effect of this phenomenon is that the precipitates will coat the quartz tube of UV/Oxidation systems, thereby reducing the UV transmittance and causing poor performance of the UV system. Accordingly, sufficient contact time for a solid-liquid separation must be provided prior to the UV reactor to allow the above-mentioned chemicals to be reduced to insoluble oxides (i.e., iron hydroxide ($Fe(OH)_3$), manganese dioxide (MnO_2) and to allow subsequent removal of the precipitate. For these reasons pretreatment may be required for proper functioning of UV/Oxidation units if iron concentration is higher than 5 mg/L. UV systems using low intensity UV lamps or equipped with wiper systems may reduce pretreatment requirements. However, walls of reactor can become caked with the oxidized metals.

4.2.1.6 Color

Color in the visible range (above 400 nm) does not affect UV transmissivity. However, the organic compounds such as tannic and humic substances that give the water a color can absorb UV light and reduce the amount of UV available for oxidation reactions.

Ozone is highly effective in color removal, therefore, UV/Ozone treatment can be an effective color removal technique for highly colored waters in addition to the organic removal. However, the cost associated with the controls of stripped VOCs and ozone in the off-gases should be evaluated.

UV/Hydrogen Peroxide treatment is not effective in colored water although there is no quantitative color value that prevents treatment. Some UV/Hydrogen Peroxide vendors have developed processes that use a patented catalyst to increase the light absorption efficiency[38]. The catalyst is typically of iron-based compounds, and when catalyzed by UV, the catalyst is broken down into smaller molecules which strongly absorb UV light at a wider UV spectrum. By a chain reaction between components and by-products, the original catalyst is recombined and is reused in the process.

4.2.1.7 Suspended Solids

Suspended solids have a tendency to absorb UV light and react with the oxidants in solution. High suspended solids levels reduce UV transmission, resulting in a decrease of the treatment efficiency. Suspended solids, either from the incoming feed or generated during the course of oxidation, may precipitate and coat the UV lamps. Water that contains more than 30 mg/L of suspended solids should be pretreated to remove solids. Depending on the concentration and composition, cartridge filters, sand filters, or settling tanks may be used. Information concerning selection and design of filtration systems is contained in USACE ETL 1110-1-159, titled Filtration Treatment Systems" dated 30, September 1994.

4.2.1.8 Dissolved Solids

Dissolved salts such as carbonate, bicarbonate, nitrite, sulfide, bromide, and cyanide act as oxidant scavengers. These salts consume the oxidant which was intended for treatment of the target contaminants thereby increasing the oxidant requirement. High levels of dissolved salts (> 400 ppm) need to be removed or reduced before treatment is cost-effective.

Metals present in their reduced states such as trivalent chromium, ferrous iron, manganous ion, and several others, are likely to be oxidized. These metals not only act as free radical scavengers, but also cause additional concerns. For instance, trivalent chromium (Cr^{+3}) is oxidized to a more toxic hexavalent chromium (Cr^{+6}); trivalent arsenic As^{+3} is oxidized to more toxic pentavalent arsenic (As^{+5}); ferrous iron and manganous ion may be oxidized to less soluble forms and drop out of solution as precipitates, which in turn strongly absorb UV light or deposit on lamps and foul the quartz tube.

To avoid fouling, a sufficiently powerful cleaning mechanism and/or metals removal should be provided. Since metals removal involves extra equipment and/or chemicals, the economics of metal removal should be compared to (1) predicted decreases in treatment efficiency without metals removal, and (2) the economics of more frequent UV lamp cleaning or replacement.

Nitrate ions tend to absorb UV light and reduce process efficiency. For waters with high nitrate concentrations (> 10

ppm), feasible solutions include nitrate removal by ion exchange or addition of peroxide with the use of a longer wavelength lamp. Some vendor found that when nitrate ions cannot easily be removed, shifting the wavelengths by changing UV lamps may prevent cations and anions from absorbing radiation[43,44]. But in this case, the impact on treatment efficiency may be substantial.

4.2.1.9 Oil and Grease

Free or emulsified oil and grease above 50 ppm in the influent water slow down treatment by competing with the target compounds for hydroxyl radicals, increasing the UV absorbance of the water, potentially coating the UV quartz sleeve(s) and reducing UV transmittance. Hydrophobic organic compounds such as benzene will preferentially dissolve in oil droplets or emulsions and will not be treated by UV/Oxidation processes. Excessive amounts of oil and grease can also be explosive at high temperatures. This potential problem is applied to both low intensity and high intensity UV lamps. Depending on the type of oil and grease contained in the wastewater, oil and grease can be removed by one or more of the following methods:

- API separator,
- Corrugated plate interceptor (CPI),
- Dissolved air flotation (DAF), or
- Microfiltration.

Parameters that interfere with process performance are summarized in Table A-S.

4.2.2 Operating Conditions

Operating parameters may be those that are varied during pilot-scale studies and/or during the treatment process to achieve the desired treatment efficiencies. Flexibility such as multiple process units and or oxidant addition variability should be provided in the full-scale system design based upon the estimated target compounds influent concentrations expected throughout the full design-life. Operation parameters include:

TABLE A-5

PARAMETERS AFFECTING UV/OXIDATION TREATMENT

Factors Affecting Treatment	Concentration of Concern
UV Interferences:	
Nitrate (NO^-_3)	>10 ppm
Nitrite (NO^-_2)	>10 ppm
Phosphate (PO_4^{-3})	> 1 %
Chloride (Cl^-)	> 1 %
COD	> 1,000 ppm
Ferrous Ion (Fe^{+2})	>50 ppm
Total Suspended Solids	> ≈ 30 ppm
Total Dissolved Solids	>400 ppm
Oil & Grease	> 50 ppm
Hydroxyl Scavengers:	
Chloride (CL^-)	> 1,000 ppm
Nitrate (NO^-_3)	>10 ppm
Carbonates (HCO^-_3/CO_3^{-2})	>300 ppm
Suiphites (SO_3^{-2})	> target contaminant
Sulphides (S^{-2})	>target contaminant
Precipitates:	
Calcium (Ca^{+2})	>50 ppm
Ferric (Fe^{+3})	>50 ppm
Magnesium (Mg^{+2})	>1000 ppm

- Temperature,
- Oxidant type & dosage,
- Ozone/Hydrogen peroxide ratio (in $UV/O_3/H_2O_2$),
- UV lamp wavelength and intensity,
- Addition of catalyst,
- Hydraulic Retention Time (HRT),
- Mode of operation,
- UV transmissivity, and
- Treatment Goal.

4.2.2.1 Temperature

In oxidation reactions, as the temperature increases, the activation energy of the organic compound increases, resulting in an increase of the overall rate of reaction[5].

In UV/Hydrogen peroxide systems, the photolysis of hydrogen peroxide is not influenced by temperature, and the generation of hydroxyl radicals does not seem to be temperature dependent either. Improved efficiency of UV/H_2O_2 has been observed at elevated temperatures[1,34], however.

In UV/Ozone systems, ozone will decompose to oxygen gas at temperatures above 122°F, reducing the efficiency of hydroxyl radicals formation. Elevated temperature will also reduce the dissolution rates of ozone in water[21,42]. This tends to negate reaction rate increases caused by elevated temperature. If the wastewater requires pH adjustment, temperature elevation is possible. For an efficient operation, UV/Ozone should operate at a temperature below 122°F. Depending on the type of UV lamps utilized, elevated temperatures may adversely affect the transmission of UV light because of increased fouling. High temperature in the effluent may require cooling before discharge.

4.2.2.2 Oxidant Type & Dosage

In UV/Oxidation, the reaction rate is of positive order with respect to the hydroxyl radical concentrations. Since these radicals are generated from ozone or hydrogen peroxide, it is expected that the rate of treatment will increase as the dosage of oxidant(s) increases. However, increase oxidants dosage does not always improve the treatment performance. For example, in UV/Hydrogen peroxide systems, hydrogen peroxide may act as a free

radical scavenger by itself, decreasing the hydroxyl radical concentrations, or absorb the energy inhibiting UV absorption on contaminants for direct photolysis, if hydrogen peroxide is present in excess. Zappi et al.[45] reported that when treating water containing hydrazine and other rocket propellant waste with UV/Hydrogen peroxide, increasing peroxide dose had resulted in better removal of hydrazine, unsymmetrical dimethyl hydrazine (UDMH) and monomethyl hydrazine (MMH) except dimethyl nitrosamine (DMNA). Removal of DMNA first increases with an increasing dose of hydrogen peroxide then decreases at the increasing dose of peroxide.

In solution, ozone undergoes two major categories of reactions:

! Those which are so rapid that the rates of ozone transferred into the solution are limited only by the amount of ozone supplied to the system, the reaction is termed mass transfer limited[3]. For example, ozonation (or decomposition) of wastewater containing hydrogen sulfide, phenols, unsaturated organic compounds such as free cyanide, hydrazine (HZ), monomethyl hydrazine (MMH), and unsymmetrical dimethyl hydrazine (UDMH) is very rapid, and thus reaction rates of these compounds are governed by the rate at which ozone is supplied to the reactor.

! Those which are slower than the mass-transfer rate, thus are limited by the reaction kinetics of the compounds to be oxidized, the reaction is termed rate transfer limited[3]. For example, ozonation of acetic acid, urea, alcohol, fixed cyanide, dimethylnitrosamine (DMNA), a by-product of the ozonation of MMH and UDMH, is very slow even in the presence of large excesses of ozone.

In UV/Ozone, a high ozone application in a low organic concentrations or limited rate transfer feed stream will result in an excess ozone in the off-gas. In some systems, overdosing can result in recombination of oxidant or may impact on process parameters such as system pH.

The optimum oxidant dosage or molar ratio of oxidants to contaminants must be derived from bench-scale or treatability study.

4.2.2.3 Oxidant Molar Ratios

In UV/O_3/H_2O_2 processes, the molar ratios of oxidants are important considerations. For example, treating water containing TCE and PCE, a maximum removal was observed when the molar ratios of ozone to peroxide equal two; the removal was less significant when the ratios differ[33]. Treating atrazine in river using O_3/H_2O_2 process, Paillard et al.[21] found that the optimal O_3/H_2O_2 ratio was 0.35 to 0.45. However, several factors may influence the molar ratio, i.e., hydrogen can act as scavenger by itself, thereby decreasing OH! concentration; Ozone can react directly with hydroxyl radicals, exhausting both ozone and hydroxyl radicals if ozone is present in excess. Optimum oxidant proportions for maximum removal vary with each water. These molar ratios need to be determined for the water under consideration using bench-scale or treatability study.

4.2.2.4 UV Wavelength and UV Intensity

In the AOP, UV radiation first is absorbed by an oxidant to generate hydroxyl radicals before subsequent reactions with organic compounds by direct photolysis. The reaction of UV radiation on oxidants to generate hydroxyl radicals depends, in part, on the wavelengths emitted by the UV light. Ozone absorbs UV radiation well at a wavelength above 253.7 nm, which corresponds to the radiation predominantly emitted by a low-pressure mercury-vapor, low-intensity UV lamps. Unlike ozone absorbance, hydrogen peroxide absorbance on UV radiation peaks at 200 nm which corresponds to a medium-pressure UV lamps. For this reason, low-pressure UV lamps are used in UV/Ozone systems, while medium-pressure UV lamps are normally utilized in UV/Hydrogen peroxide systems to enhance hydroxyl radical generation[35].

The rate of photolytic reactions depends on the intensity of the light. At low levels of illumination, the photocatalysis reaction rate is first order, and the overall reaction is rate controlled. The absorption of photons is also first order, therefore, it follows that the rate varies proportionally to the light intensity[23]. Hence, increasing the UV light intensity will

increase the reaction rate. Low level light intensity is used when photon collection or photon generation is a major cost; in such a case, lower intensity provides a cheaper treatment[31]. At low intensities, the quantum efficiency is independent of light intensity and remains fairly constant. At intermediate intensities, the reaction is not primarily rate-limited nor mass-transfer-limited (defined in the following section), and the reaction rate is expected to vary proportionally to the square root of intensity ($I^{0.5}$). The quantum efficiency then varies as the reciprocal of the square root of intensity (i.e., $I^{-0.5}$) indicating an efficiency penalty for more intense light sources. Increasing light intensity results in increased reaction rates, until the mass-transfer limit is reached. In processes where the reactor cost is a major concern, it is worthwhile to increase the light intensity to enhance the reaction rate (per volume) below the mass-transfer limit.

When the light intensity is increased beyond a critical value, the reaction shifts from rate-controlled to mass-transfer-controlled. At this point the rate of reaction does not change with the light intensity and remains constant; thus the efficiency varies as a reciprocal of the light intensity (1/I) Recognizing that for only as long as the reaction is below the mass transfer limit, increase of the light intensity will increase the treatment rate.

The transition point between these regimes will vary with each application and must be explored for each UV/Oxidation system.

4.2.2.5 Addition of Catalysts

Addition of catalysts may increase the rate of oxidation reaction which is quasi-first order with respect to the catalyst concentration. In photolytic reactions, stimulation of active sites are accomplished by photons; hence, the rate of these reactions are not considered to be a major function of catalyst concentration. Once the light absorption is complete, addition of more catalyst will not increase the reaction rate. Not all UV/Oxidation processes use catalysts.

Enhanced phenol treatment rates have been observed when catalysts, in the form of copper ion or ferrous iron, are added to the system. Addition of catalysts should be controlled since excessive use of solid catalyst particles in the system may reduce the absorbance of UV light. Details on catalysts are provided in Section 4.8.

4.2.2.6 Hydraulic Retention Time

The hydraulic retention time (HRT) is the amount of contact time between the contaminants with the oxidant and the UV light in the reactor. The HRT is a function of the flow rate into the reactor and can also be influenced by UV dosage and oxidant dosage. High HRT would achieve a high removal rate of all contaminants. Some manufacturers use catalyst to improve reaction rate, thereby reducing the HRT. Since HRT depends on different parameters (i.e., UV dosage, oxidant dosage), treatability testing data provides the HRT on the basis of applied UV energy and oxidant dosage.

According to Solarchem, the residence time is not the key design variable in sizing the UV/Hydroxide system. The most important design parameter is the amount of energy applied to produce sufficient hydroxyl radicals for further reaction. Solarchem designs its UV systems using EE/O as a design parameter. EE/O stands for Electrical Energy consumption (kWH) per Order of magnitude (decade) reduction in contaminant concentration in 1000 gallons of water by one order of magnitude. The EE/O combines light intensity, residence time, and percent destruction into a single measure. The EE/O allows for scale-up to full-scale design and cost[38]. Typical EE/Os for contaminant destruction is shown in Table A-6.

4.2.2.7 Mode of Operation

The AOP systems can be operated in different arrangements: flow-through mode, flow-through mode with recycle, batch mode, and batch mode with recycle.

The flow-through mode is used in a homogeneous UV/Oxidation system for water with low concentrations of organics, usually for the range of less than 10 ppm. The water is processed

TABLE A-6
Typical EE/Os for Contaminant Destruction

Compound	EE/0 (kWh/l000gal/order)
1, 4—Dioxane	2 - 6
Atrazine	30
Benzene	2 - 5
Chlorobenzene	5
Chloroform	15*
DCA	15*
DCE	2 - 5
Freon	10*
Iron Cyanide	40
NDMA	2 - 5
PCE	3 - 8
PCP	10
Phenol	5
TCE	2 - 4
Toluene	2 - 5
Xylene	2 - 5
TCA	15*
TNT	12
Vinyl Chloride	2 - 3

* Reduction catalyst required

continuously in a single pass through the oxidation chamber. The flow-through mode is illustrated in Figure A-7.

Theoretically, the most efficient way to run a UV reactor is in flow through mode but if the water contains more than 10 ppm of organics, more modules can be added to achieve a longer retention time or the system can be operated in the flow-through mode with recycle. The contaminated water is processed by simultaneously injecting and withdrawing a constant percentage of the waste while recycling around the loop for further reduction of target contaminant concentration within the oxidation chamber. High target contaminant concentrations require recirculation to destroy the organics and by-product. Flow-through with recycle mode is less efficient than straight flow-through mode. Not all UV/AOP vendors use the flow-through with recycle mode[17]. The flow-through with recycle mode is illustrated in Figure A-8.

At low influent flow rates, greater treatment efficiency can be achieved by a batch system. In the batch mode, contaminated water is accumulated in a storage tank; water is recycled, processed until analysis of the water shows that the contaminants have been destroyed. Problem with the batch mode is that some volatile compounds especially low boiling (high vapor pressure) such as Freon-l-l and vinyl chloride can easily be volatilized. Another problem that can be encountered with batch mode is overheating. Medium-pressure UV lamps generate heat energy that can rise water temperature above allowable levels; when this situation occurs, the temperature control devices automatically stop the UV to the system. The frequent stopping and starting of the lamps will reduce the life of the UV lamps. Therefore, in batch systems a cooling systems, such as a heat exchanger, should be added when a medium pressure lamp is used (low wattage lamps do not need cooling system) . Also the reactor should be designed with batch volumes and treatment times that allow for continuous operation in order to reduce the number of lamp starts and stops. In batch treatments, a heat exchanger should account for any volatilization. The batch recycle mode is illustrated in Figure A-9.

The selected mode for operation of an AOP reactor depends on the AOP manufacture design, the influent flow rates, the type of

FIGURE A-7 TO A-9

FLOW-THROUGH
FIGURE A-7

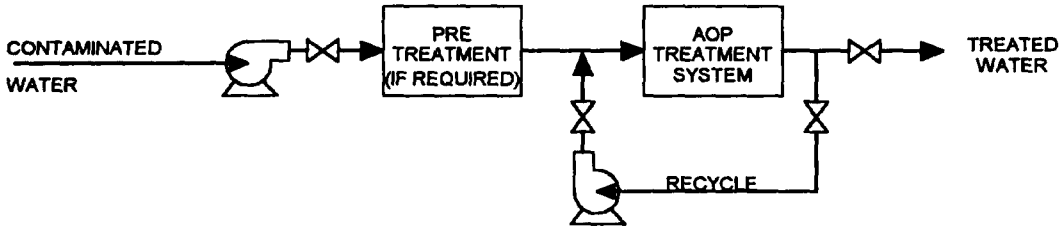

FLOW-THROUGH WITH RECYCLE
FIGURE A-8

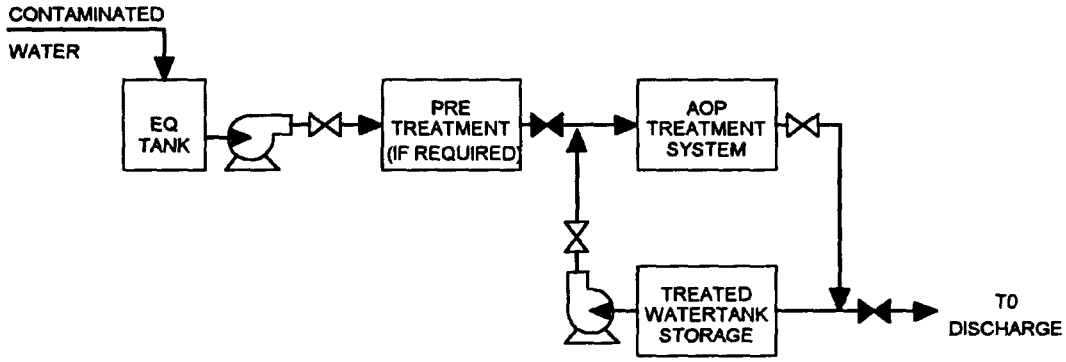

BATCH-RECYCLE
FIGURE A-9

contaminants, the relative concentrations detected in the influent and treatment goals.

4.2.2.8 UV Transmissivity

The aqueous stream being treated must provide a good transmission of UV light. Factors that interfere with UV transmissivity include:

- color,
- turbidity, and
- fluid density.

Both color and turbidity reduce UV transmission. If the water contains high dissolved metals, turbidity may increase after the treatment. This increase is due to the oxidized metal precipitates. Turbidity, however, does not directly affect chemical oxidation of the contaminant by ozone or hydrogen peroxide.

UV light transmits through the water changes with the fluid density. The lower fluid density the higher UV transmission. Fluid density varies with the gas to liquid (G/L) flow ratios; the lower the G/L ratios, the higher fluid density, with the highest fluid density in a wastewater system being approximately that of water.

4.2.2.9 Treatment goals

UV/oxidation can break down (mineralize) essentially any organic compound to carbon dioxide and water. In most applications, this level of treatment is not necessary. When the treatment achieves the treatment goals for target contaminants, the oxidation by-products (typically low molecular weight carboxylic acids, oxalic acids, and inorganic salt such as chloride, sulfates) are typically innocuous materials causing no problem regarding toxicity and regulatory issues.

4.2.3 Maintenance

The process performance of an AOP system depends on the operability and the reliability of the equipment. Maintenance is required to ensure consistent performance of the treatment

equipment. The maintenance requirements are discussed in greater detail in Section 10, Maintenance Requirements.

4.3 COLLECTION OF REQUIRED DATA FOR DESIGN

Since the nature of the water being treated at each site is different, specific data for design are required for each application. The process design for the application and selection of a UV/Oxidation system can be grouped into the following categories:

- Treatability studies, and
- Site characteristics.

These issues will be discussed in the subsections below.

4.3.1 Treatability Studies

Prior to the design of an AOP treatment system, laboratory or treatment tests should be conducted. Treatability studies are required to evaluate the technology*s ability to treat organic contaminants in the water at the site. Treatability studies also allow identification of variables affecting the AOP system. Variables include pretreatment, influent flow rate, temperature, pH, oxidant type and dosage, UV light intensity, mixing intensity, hydraulic retention time, effectiveness of the catalyst, if used, and post-treatment, if required. Treatability studies are discussed in details in Section 7.

4.3.2 Site Characteristics

Site characteristics can impact the design and application of the AOP technology, and these effects should be considered before selecting the technology for remediation of a specific site. Site-specific factors include support systems, site area and preparation, site access, climate, utilities services and supplies.

4.3.2.1 Site Area and Support System

The site area should be adequate for the treatment unit and associated chemical feed units. On-site facilities may be required for office and laboratory work. On-site buildings should be equipped with electrical power to run laboratory equipment and should be heated and/or air-conditioned, depending

on the climate. On-site laboratory facilities should have equipment to perform simple analyses and to monitor treatment system performance. Analyses such as pH, total suspended solids (TSS) , total dissolved solids (TDS), oil and grease (O&G) , ozone, H_2O_2, temperature and chemical oxygen demand (COD) may be required.

4.3.2.2 Site Access

The site must be accessible to service vehicles and/or trucks that deliver the AOP equipment and chemicals such as acid/caustic, H_2O_2, Oxygen, UV lamps and spare parts.

4.3.2.3 Climate

Most AOP systems are installed indoors, and because the chemical oxidation process generates heat, some units produce more heat than others, heating or insulation is usually not required. However, if the system is installed outdoors, the AOP units, chemical storage tank, influent storage tanks and associated plumbing should be insulated to protect from freezing. Housing the system also facilitates regular system checks and maintenance. The high-voltage power supply, which is usually required for the AOP, should also be protected from heavy precipitation.

4.3.2.4 Utilities

Utility requirements include potable water, electricity, air and telephone. Potable water is required for safety shower, eye wash, personnel decontamination, and cleaning field sampling equipment. Usually 480-volt, three-phase electrical service is required to run a UV/Hydrogen peroxide or a UV/Ozone unit. Additional electrical service may be needed for the office and laboratory building lighting as well as to operate on-site laboratory, wells pumps and office equipment. Groundwater extraction well pumps may need air to operate. Gas may be required for heating and for laboratory works. Phone service is required to order supplies, contact emergency services, and provide normal communications.

4.3.2.5 Services and Supplies

A number of services and supplies are required for the AOP technology such as UV lamps, pumps, flow meters, and piping. An adequate on-site supply of spare parts is needed. If an on-site parts inventory is not an option, site proximity to an industrial supply center is an important consideration. In addition, a 30-day supply of chemicals, such as hydrogen peroxide, sulfuric acid, and sodium hydroxide, proximity to a supply center carrying these chemicals is essential.

Complex laboratory services, such as VOC and SVOC analyses, are usually not performed in an on-site field laboratory. This analysis requires contracting with an analytical laboratory for an on-going monitoring program.

4.4 MIXING AND OXIDANT ADDITION

Mixing is employed for the purpose of blending or complete dispersal of chemicals with water to create a homogeneous, single phase throughout the wastewater to insure uniform exposure of pollutants which are to be removed.

Mixing the waste stream and oxidant(s) requires control, since mixing intensities and rate of transfer can have a dramatic effect on the way the waste stream is in contact with the AOP process. UV light can be absorbed in a fraction of a centimeter, so it is important to exchange the treated water nearest the quartz tube with untreated water nearest the reactor wall. Typically, the reactors are designed for plug flow in which mixing occurs vertically. There is no forward or backward mixing inside the reactor. Mixing requirements are discussed in the following sections.

4.4.1 UV/Hydrogen Peroxide System

UV/Hydrogen peroxide systems generally mix the hydrogen peroxide with wastewater via an in-line static mixer on the reactor feed line. The engineered reactor should insure and expedite thorough mixing of the excess peroxide with the contaminant streams. Some vendors improve the use of hydrogen peroxide by a dosing equipment called "splitter". The peroxide is mixed with a small volume of the treated water from the effluent of the oxidation chamber. The peroxide water mixture is

split into several streams by a series of valves and flow controls directed into the oxidation chamber at several locations. The turbulent flow patterns couple with critical distance from the TN lamp to the reactor wall are critical for efficient consumption of reactants and optimized energy supply.

4.4.2 UV/Ozone and UV/Ozone/Hydrogen Peroxide System

UV/Ozone or UV/Ozone/Hydrogen peroxide systems provide ozone gas mixing through diffusers in the liquid waste streams. The ozonized gas to liquid flow rate (G/L) ratio is an important design variable since it influences both the reactor size, mass transfer in the reactor as well as the kinetics of the oxidation reaction. The G/L ratio can also influence both ozone production, the selection of ozone diffuser and the mixing condition in the reactor. For example, if air is used as ozonator processed gas, the G/L ratio is higher than that from the oxygen source. This air flow variation can cause a difference in mixing patterns inside the reactor. When oxygen is used as the processed gas for ozonation, a low G/L ratios will result and the mixing regime, in this case, is close to that of a plug-flow reactor. Whereas when air is used as processed gas for ozonation, a high G/L ratio will result, and the mixing regime is close to that of a mixed reactor. In any cases, the flow through the reactor still mimics plug flow due to baffle and gravity flow over a weir. At high ozone requirements, the system may be limited by the solubility of ozone gas in the water. Such a system may also cause gas emission and possible stripping of VOCs from the water. For reactions with positive-reaction order, plug-flow mixing characteristics offer a higher treatment rate than mixed reactor. Since an ozone reaction has a positive order, low G/L ratios should be considered. In addition to increasing the treatment rate, low G/L ratios reduce stripping of volatile organics[33]. Gas flow rates that are too low decrease mixing in the reactor, and the gas tends to channelize and pass through the reaction chamber without proper dissolution.

4.5 TEMPERATURE CONTROL

The performance of the UV/Hydrogen peroxide treatment process usually favors high temperatures up to certain point. Increasing temperature above that point no longer benefits the process performance[23]. Temperatures that are too high may boil the influent water or over-pressurize the reactor, creating leaks in

the reactor cover gaskets and quickly foul the quartz tube that holds the UV lamps, reducing process efficiency. Water temperature in reactors that use medium-pressure, high-intensity UV lamps, may increase up to 5°F per minute of detention time. Temperature becomes a potential problem when water must be recycled through the system several times to remove contaminants. Some applications may require installation of a cooling system such as a heat exchanger to avoid overheating the liquid.

In UV/Ozone systems, the operating temperature of the reactor is between 40 and 90°F. Because ozone is less soluble at high temperatures, it is important not to add unnecessary heat or UV light to the UV reactor because both accelerate the auto-decomposition of ozone as well as the desired chemical oxidation.

The temperature is usually monitored at the reactor outlet. Depending on the AOP*s manufacturer, a temperature sensor is normally used to detect high temperature condition and turn on cooling system (blower or chiller) to cool the reactor or shut the system down if the temperature exceeds the high-alarm point. A high-temperature condition will cause the power supply to the UV lamps to trip or to shut off the ozone generator. In a related manner, excessive start/stop cycles on the unit may lead to premature failure of the transformer and shorten the UV lamps life.

4.6 MAJOR EQUIPMENT COMPONENTS OF AN OXIDATION UNIT

The UV/Oxidation system has the following major components:

- Reactor tank(s),
- A UV radiation source,
- An oxidation source (ozone or hydrogen peroxide), and
- Auxiliary equipment.

4.6.1 Reactor Tank(s)

Reactors are manufactured by each vendor to adapt to a special lamp design. The shape and size vary with each vendor. Typically, a UV/Hydrogen Peroxide reactor is comprised of a chamber that houses the UV lamps protected in quartz sleeves, an inlet on which process water, hydrogen peroxide and other additives are introduced, and an outlet. Some AOP manufacturers

that use high intensity UV lamps provide circular wipers installed on the quartz tube housing the UV lamps, i.e., Rayox® of Solarchem Environmental Systems, and **perox-pure**™ of Vulcan-Peroxidation Systems.

The UV/Ozone reactor has different configuration to accommodate the ozone contactor (also called diffuser or sparging device) for ozone dilution. In addition, the off-gas must be treated to destroy any residual ozone and or VOCs before discharging to the atmosphere. UV/Ozone/Hydrogen Peroxide reactor has the same configuration as that of the UV/Ozone in addition to a hydrogen peroxide feed system that provides hydrogen peroxide to the reactor. An in-line static mixer disperses the hydrogen peroxide from the feed tank into the feed line to the reactor. A schematic of a UV reactor is presented in Figure A-10.

In general, the key issues to consider when designing and selecting a UV reactor are:

- Influent Flow Rate
- Hydraulic Retention Time (HRT)
- Reactor configuration,
- Number of lamps, and
- Maximum use of oxidants.

The following sections will discuss these issues.

4.6.1.1 Influent Flow rate

The reactor should be designed based on the influent flow. Required plant flow data include:

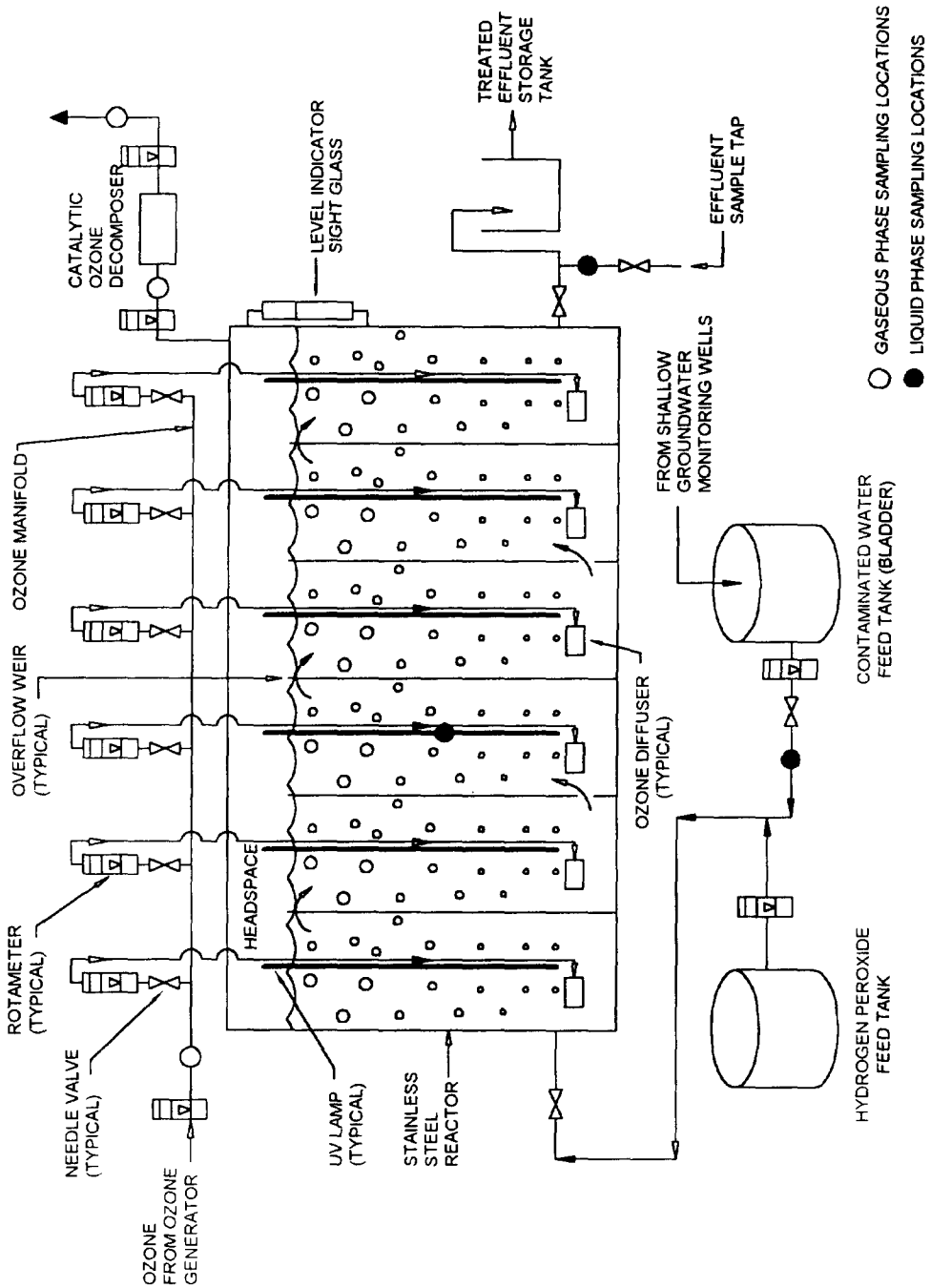

UV REACTOR
(COURTESY OF ULTROX®)

FIGURE A-10

- Average daily flow,
- Peak-hour flow, and
- Minimum hourly flow.

Peak-hour flow is used to size the reactor; minimum hourly flow is useful for temperature and lamp controls; average daily flows are important for estimating average utilization of the system for operation and maintenance needs. In addition, the reactor design should be flexible enough to be operated in both batch and continuous modes of operation.

4.6.1.2 Hydraulic Retention Time

The UV reactor volume is designed based on the following formula:

$$V = Q \times HRT \qquad (4\text{-}1)$$

where: V = Reactor volume, gal
Q = water flow, gpm
HRT = hydraulic retention time, minute

Hydraulic detention time is discussed in the previous Section 4.2.2.6.

4.6.1.3 Reactor Configuration

Reactors are manufactured by vendors to adapt to a special lamp design. For maximum effect, the wastewater to be treated has to be directed through the area of greatest UV intensity. This is achieved by creating plug-flow conditions by using baffles with relatively high turbulence. In this way, the untreated water near the reactor wall is exchanged with the treated water near the quartz tube, and almost all the UV intensity produced by the lamps is absorbed by the water.

In general, two configurations are used: the horizontal configuration and the vertical configuration. Each has advantages and disadvantages.

Horizontal Orientation: In the horizontal option, the lamps are in a submerged horizontal position, so that effective treatment of water is confined to the lamp arc length only.

The advantages of horizontal lamp system cited by most manufacturers are:

! The upper lamp end is not convection heated.

! Mercury does not pool at one lamp end, reducing lamp stress during start-up, and thereby extending lamp life.

! Leaking at the lower chamber mounting or connection locations is reduced.

! Oxidation chambers can be stacked to increase system size without increasing system square footage (95)

! Wastewater flow follows a serpentine pathway, thus achieving good mixing pattern of a plug flow.

Some commercial vendor-designed reactors are shown in Figures A-li and A-12.

Vertical Orientation: In the vertical option, the lamps are suspended vertically within the reactor. Systems that use medium-pressure mercury lamps have one single lamp per reactor[17]; those that use low-pressure mercury lamps have multiple lamps arranged in row(s) inside each compartment or stage[18].

The advantages of vertical lamp system cited by most manufacturers are:

! Better control of plug flow, as gravity flow is achieved by a weir in each compartment;

! Only vertical orientation achieves diffuser submergence which is a critical factors in designing of ozone gas diffusion contacting system; and

! Access to UV lamp(s) is from the top, therefore less service area is required.

COMMERCIAL UV OXIDATION UNIT
(COURTESY OF VULCAN/PEROXIDATION SYSTEMS)
FIGURE A-11

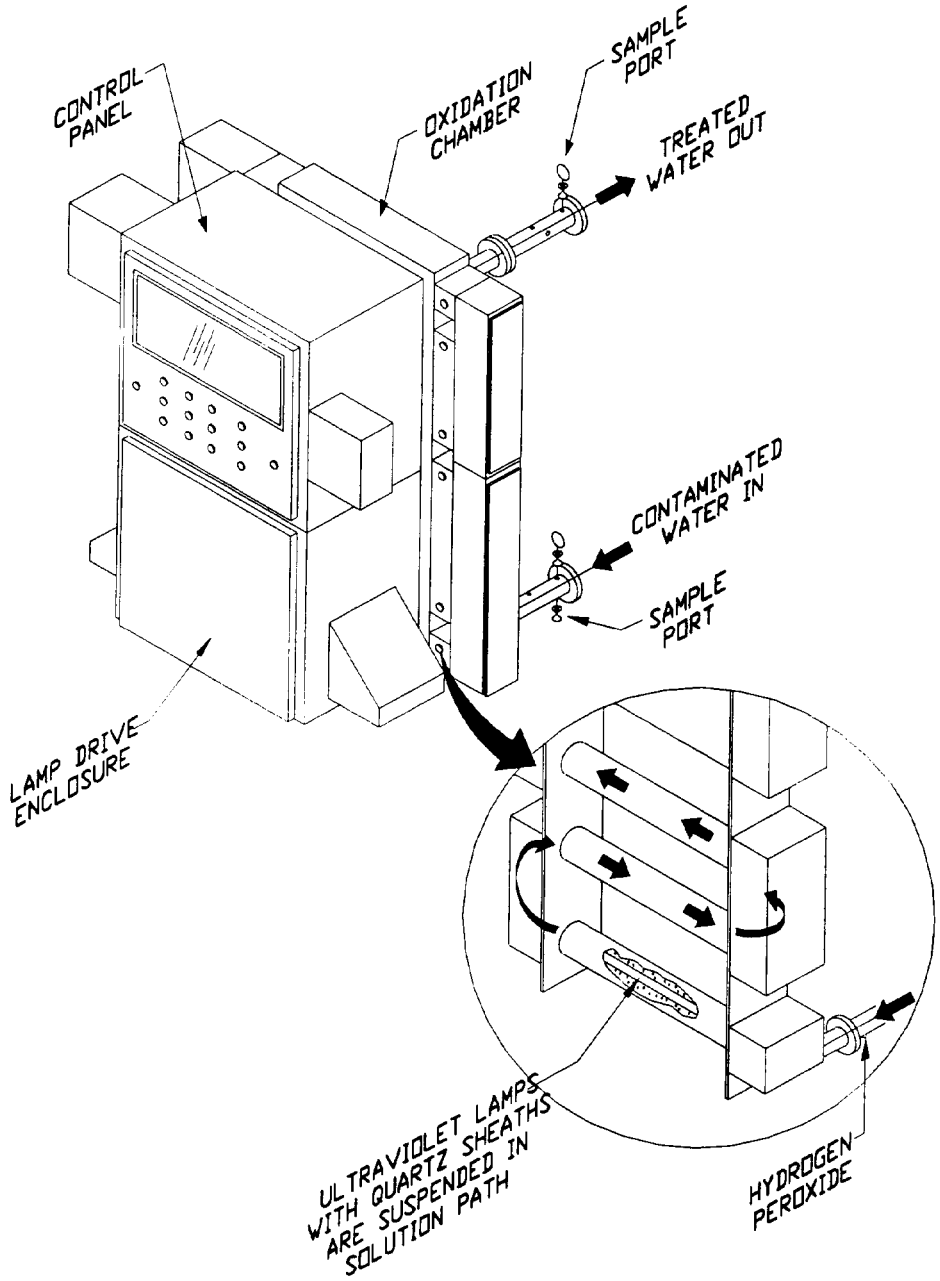

COMMERCIAL UV OXIDATION UNIT
(COURTESY OF SOLARCHEM)
FIGURE A–12

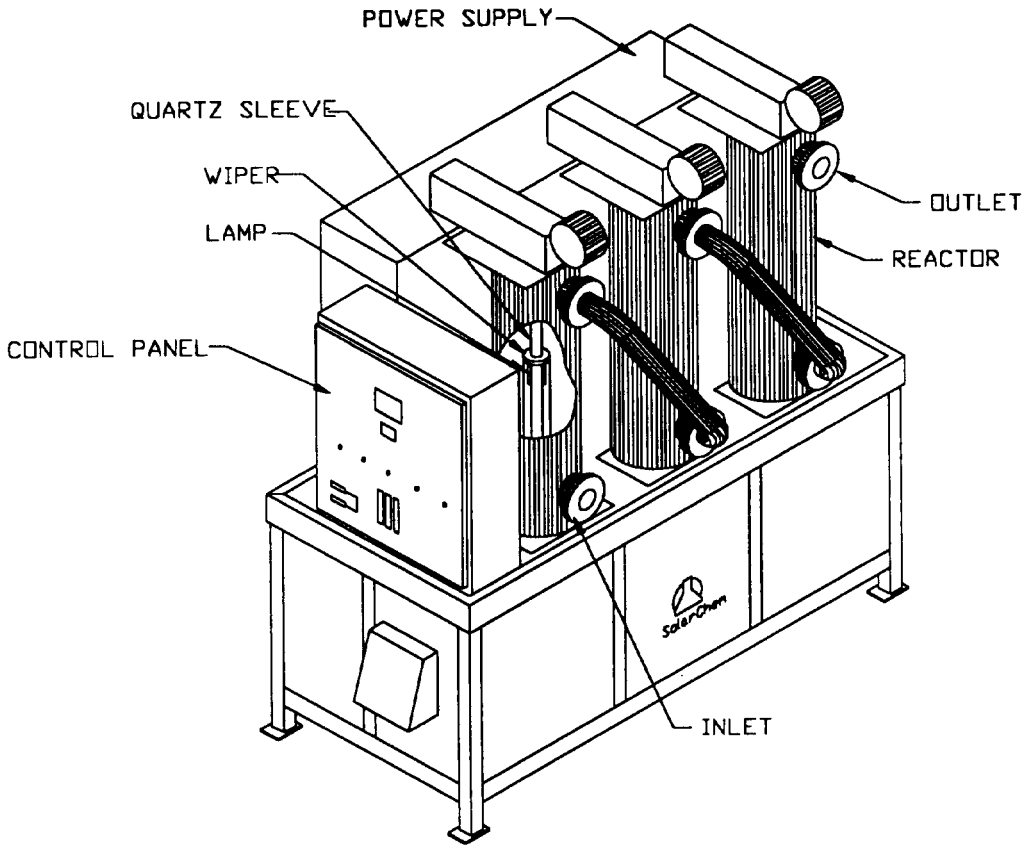

4.6.1.4 The Number of Lamps

The AOP reactor must be designed to accommodate a range of flow variations including the peak hydraulic capacity. On most small systems, sufficient lamp capacity is provided to meet the plant*s maximum flow, and all lamps are fully utilized throughout the entire flow range. On medium and large installations, “flow pacing” may be used. Flow pacing is an equipment design which allows lamps to switch on or off depending on plant flow.

The reactor size and dimensions should be designed to accommodate the number of lamps utilized in the oxidation reactor. In a multichamber reactor, as more chambers are used, the flow regime will approach that of plug flow reactor. One 30 kW medium-pressure high-intensity lamp can replace 200 to 500 low-pressure lamps and should result in a system that requires a smaller reactor and much less space. However, this compact reactor may require a cooling system to maintain the reactor temperature below a desired set point. Also, the operating cost to run the one 30kW lamp may be the same or greater than that for the 200-500 low-pressure bulbs depending upon efficiency.

4.6.1.5 Maximum Use of Oxidants

The UV reactors should also be designed for maximum use of oxidants. UV/Ozone uses diffusers to dissolve ozone into the water. Since a number of techniques exist for ozone dissolution in the liquid, reactors should be designed to accommodate the diffusers that give maximum use of ozone. Fine bubble, disc type diffusers with bubble size between 2 and 3 mm may be used for dispersing the gas[46]. EPA Design Manual, Municipal Wastewater Disinfection, 1986 should be consulted for sizing the ozone diffusers.

Other factors that effect the use of oxidants (ozone) include:

! Mass transfer, and
! Rate transfer.

Treating a wastewater whose reaction is mass-transfer limited, one stage of the reactor or flow-through mode should be used. For those wastewaters which contain materials whose

oxidations are reaction-rate limited, multiple-stage flow reactors are preferred. Whether an AOP treatment is mass transfer or rate-limited may also change with the production of intermediate compounds during the treatment. The treatment process may be designed to optimize the mass transfer and kinetic characteristics for a particular wastewater. It is important to minimize the amount of ozone required for the specific purposes for which ozone is used.

In UV/Peroxide, hydrogen peroxide is injected into the influent line to the reactor. Mixing of the hydrogen peroxide with the influent raw water is achieved by an in-line static mixer installed in the influent line downstream of the hydrogen peroxide injection point. Some vendor designs the reactor with flexibility to split hydrogen peroxide injection in multiple points for maximum use[12].

4.6.2 UV Radiation Source

The previous sections discuss the UV light source, and the required wavelength for the photolysis of oxidants and contaminants. This section discusses the type of lamp that will provide the wavelength and intensity necessary for photochemical reaction.

UV lamps are made of quartz glass and filled with low-or medium pressure mercury-vapor and argon. When the cathode is energized, a low-pressure UV lamp emits the majority of its photons at 253.7 nm wavelength, and medium mercury-vapor lamps emit radiation at a wide wavelength spectrum. A spectral distribution of high-intensity, medium-pressure mercury lamps is presented in Figure A-13.

Since UV radiation attenuates very rapidly as function of distance in a liquid, and the photocatalysis is presumed to be occurring primarily in the liquid film as it is swept by the UV transfer surface of the bulb[47], the path length between the quartz sleeve and the reactor wall should be sized to allow for a reasonable fraction (>0.9) of the light to be absorbed.

COURTESY OF HANOVIA
SPECTRAL DISTRIBUTION MERCURY LAMP
FIGURE A-13

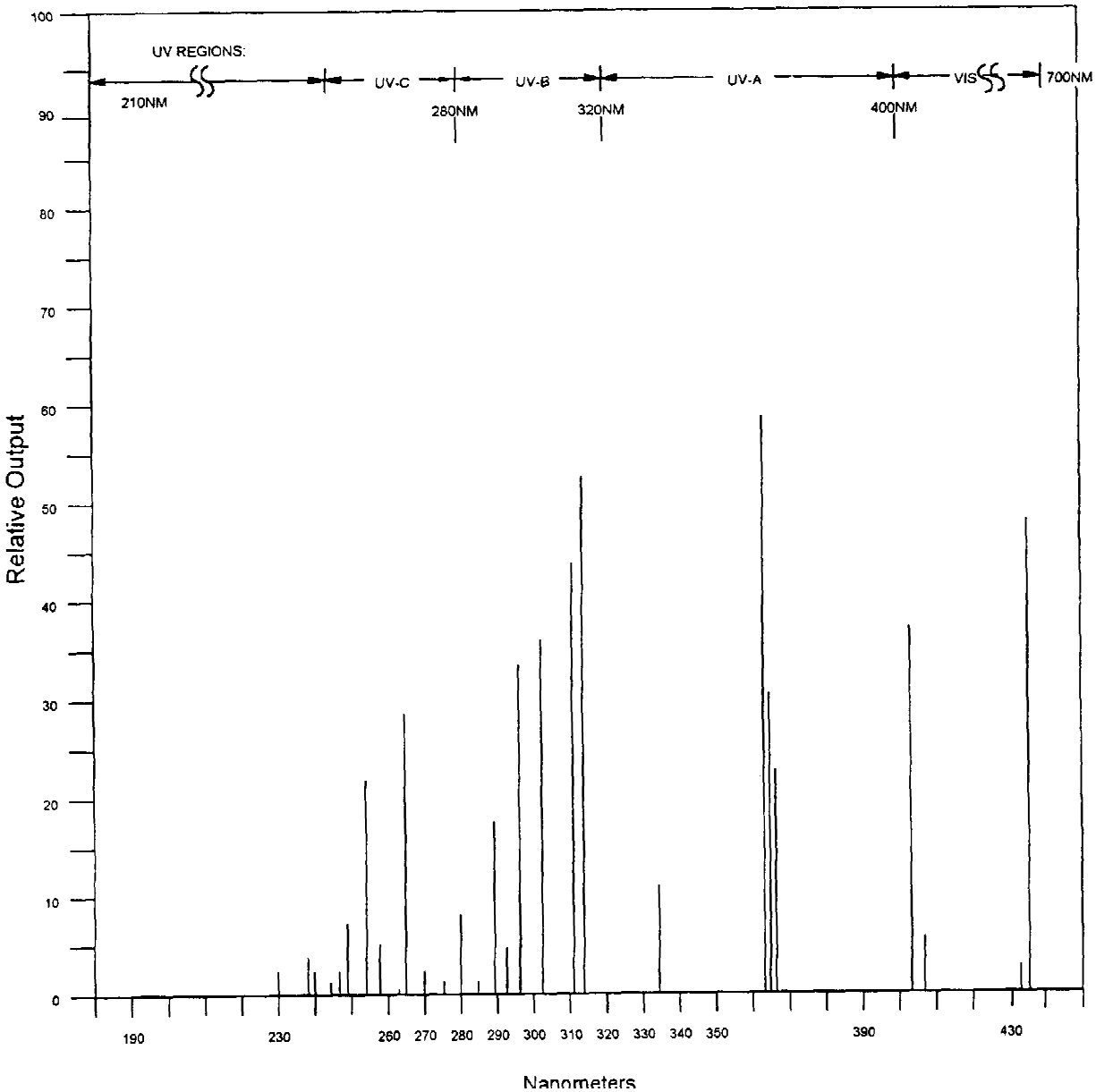

Standard single-pin or four-pin, slimline, UV tubes with instantaneous-start, energy-saving ballasts certified by American National Standards Institute (ANSI) and Underwriters Laboratories Inc. (UL) , should be specified. Some new applications utilize electronic ballasts which tend to operate the low-pressure mercury lamp close to 40°C. The vendor claims that this type of lamp draws less energy and last longer as compared to electromagnetic ballasts, which last about 15 years. For design purposes, the designer should consult manufacturer rated literature and average UV output after 100 hours when performing UV dose computations[48].

Manufacturers and designers must always give consideration to the practical implications of lamp maintenance and replacement. Access to the lamp must be simple and safe with each system design. An universal feature is to use the quartz jacket to house the lamp itself. The Quartz jacket isolates the lamp from the aqueous environment while allowing intimate exposure of the water to the UV energy.

Quartz jackets in vertical lamp systems are typically constructed with “test tube” ends so that only one end of the jacket needs to be accessed for lamp servicing. The UV lamp slides into the quartz jacket and is held centrally using spacers which also serve to prevent the lamp from rattling under the effect of water flow. Horizontal-mounted lamps such as manufactured by Peroxidation Inc., have both ends of the quartz tube open.

The treatment zone of a UV lamp is the length of the arc established between the electrodes of the lamp when the mercury lamp is activated. The lamp is identified by its arc length. Commercial UV lamps have 76.2 cm (30 in), or 147.3 cm (58 in) arc lengths. Proprietary lamps have different arc lengths. UV arc length is illustrated in Figure A-14.

Five types of mercury lamps are available with significant output between 180 nm and 300 nm. These are:

! Low-Pressure Mercury Lamps,

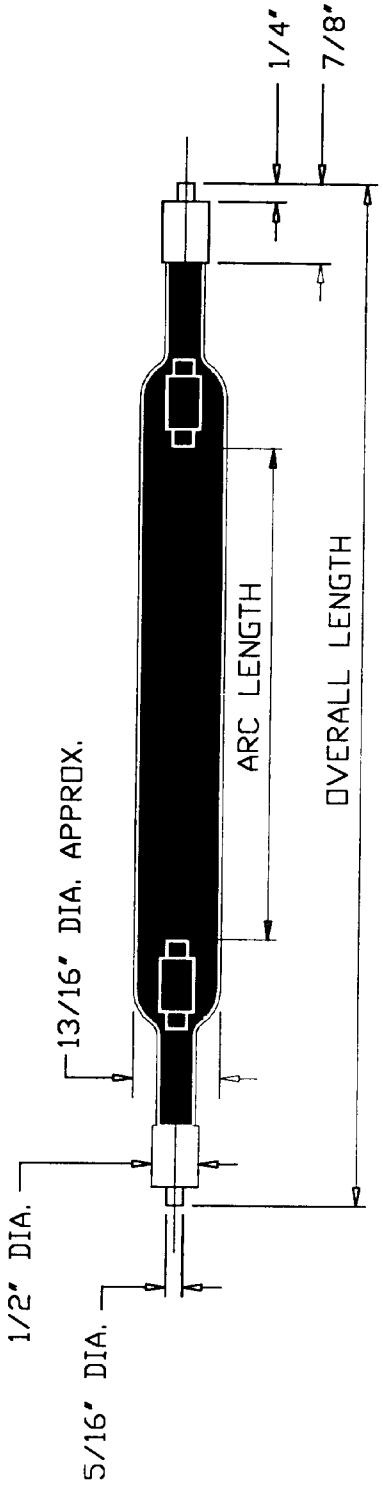

DEFINITION OF ARC LENGTH
(COURTESY OF HANOVIA)

FIGURE A-14

- Medium-Pressure Mercury Lamps,
- Pulsed-Xenon Flashlamps,
- Excimer lamps, and
- Proprietary Lamps.

These lamps are discussed in the following sections.

4.6.2.1 Low-Pressure Mercury Lamps

Low pressure mercury lamps operate at low pressure (10-2 torr or 0.O2psi) and low temperatures, typically 40°C. These lamps have low power inputs in the range of 20W to 120W. They generally have long lifetimes in the range of 6,000 to 10,000 hours. About 90 percent of the light output is centered around 254 nm, with an electrical efficiency of around 30 percent. There is also a significant output at 185 nm. Since almost all of the output is around 250 nm, the absorbing species must have significant light absorption at this wavelength[28,49]. Ozone absorbs very strongly at 254 nm, hence these lamps have found wide use in UV/Ozone systems.

Low pressure lamps alone are not particularly effective for treating refractory compounds such as chlorinated alkanes which require light of wavelengths below 240 nm. for the photolysis. Because of the low power provided by each lamp, a large number of lamps would be required to treat water at reasonable flow rates.

The advantages of the low-pressure lamps are:

- High electrical efficiency (30%)
- Long life time (6000-10,000 hrs), and
- Less fouling.

The disadvantages are:

- Low efficiency for direct photolysis of some pollutants;
- More lamps are required for the same service; and
- Potential high cost of used lamps disposal (large number)

4.6.2.2 Medium-Pressure Mercury Lamps

Medium-pressure mercury lamps (MPML) operate at higher pressures and temperatures than low-pressure lamps. The bulb temperature is typically in the range of 400 to 600°C and even higher. The lamp lifetime is shorter than that of the low-pressure lamps, the range is about 3,000 to 4,000 hours. MPML do not put out the majority of their UV light in one wavelength region as do low pressure mercury lamps. MPML generate a broad spectrum output with strong peaks in the 360-370 rim, 300-310 nm, and 250-270 nm ranges. In addition, some MPML put out a broad band of moderate strength between 190-240 nm[28].

The advantages of the medium-pressure lamps are:

! Fewer lamps than low-pressure lamp systems,
! Fast reaction, hence low HRT, and
! Direct photochemical oxidation of some contaminant species.

The disadvantages are:

! Low electrical efficiency (5 to 20%), hence higher electrical costs,

! More prone to fouling due to high temperature, and

! High heat output.

4.6.2.3 Pulsed-Xenon Flashlamps

The Pulsed-Xenon flashlamps have a maximum output at 230 nm. and significant output at wavelengths as low as 200 nm. These lamps operate in pulsed mode with peak intensities much greater than those of continuous mercury-vapor lamps. The pulse duration is typically in the microsecond timescale while the interval between pulses is on the order of milliseconds. The xenon pulsed-plasma flashlamp emits short wavelength UV light at very high intensities. UV light generated can be increased by increasing the current density to the lamp. The electrical discharge quickly heats the fill gas to a high enough temperature (> 13,000°K) to create a plasma that emits black body light characteristic of its temperature. The efficiency of light output at 300 nm per energy input is 18.6% for Xenon lamp. The

xenon flash lamps also produce more output below 240 nm than do the medium-pressure mercury lamps. Practical efficiencies, however, are around 20 percent.

Unique features of pulsed lamps include the ability to come to full power immediately, and the ability to shift the spectrum of a single lamp simply by changing the peak pulse power. Since the lamps must operate at very high current densities to give the 20 percent UV-C output, this strains the lamps and reduces the lifetime to the range of less than 1000 hours[281',49]. The short lifetime makes these lamps quite expensive.

4.6.2.4 Excimer Lamps

Excimer lamps emit low-wavelength UV light at 172 nm from the excited Xe_2 dimmer. These sources, like low-pressure mercury lamps, operate in glow discharge mode where the fill gas is near room temperature. When Excimer emits a photon it dissociates, and thus the light cannot be reabsorbed because no ground state of the excimer exists. Excimer lamps have an efficiency ranging from 5 to 30 percent. Applications of Excimer lamps for large-scale treatment systems are not yet commercially marketed. Therefore, very limited information on the lamps is available.

4.6.2.5 Proprietary Lamps

Some commercial advanced oxidation suppliers use proprietary lamps which have improved light operating characteristics of medium-pressure mercury lamps. Some of these proprietary lamps operate at higher power densities than do the conventional medium-pressure lamps. This results in a smaller lamp size for the same power input and also provides an improved efficiency and spectral emission. The operating temperatures of these lamps are in the range of 700 to 1,000°C. The lamps can have UV-C efficiencies of about 39 percent, and emit strongly below 240 nm. This makes the lamps more effective in the direct photolysis of specific compounds that absorb well at shorter wavelengths.

The advantages of using a medium-pressure, high-intensity UV lamp are:

- Reduce maintenance cost for replacing UV lamps (less lamps),
- Ability to design a more compact treatment system,
- Ability to destroy refractory pollutants at higher concentrations, and
- Make a lamp sleeve cleaning mechanism economically justifiable.

The disadvantages of using this type of lamps are:

- Higher tendency for fouling without proven wiper,
- Increased power requirement,
- High heat output due to low energy efficiency, and
- Increased burnout rate.

Some vendors claim that medium-pressure proprietary lamps do not have increased power requirement or high heat output because the efficiency of these lamps is as good or better than that of low-pressure UV lamps(17,33).

4.6.2.6 UV Radiation Measurement

Applying UV to the AOP processes requires determining the flux of photons emitted by lamps. Determination of the flux can be performed using actinometry or radiometry. The UV radiation dosages are expressed as the product of UV light photons and exposure time.

The dosage of UV radiation applied is expressed as watts of absorbed radiation energy per liter. The amount of UV energy normally applied for this process ranges from 0.44 to 1.32 watts/L at ambient temperature. The UV dose is calculated as follows:

$$\text{UV dose} = I \times t \ (\mu\text{W-sec/cm}^2) \qquad (4\text{-}2)$$

Where, I = UV intensity (μW/cm^2)
t = time of exposure, min^{-1}

In measuring UV intensity, manufacturer*s literature should be consulted to find out how much UV energy at specific wavelength is emitted. For example, one system inputs 36 watts, but average UV output intensity (I_o) emitted is 10.4 watts. UV energy emitted in microwatts/per square centimeter ($\mu w/cm^2$) can be calculated at the surface of the lamp based on the lamp*s effective arc length. The lamp in this system is 96. cm (36 in) long (effective arc length is about 81 cm (32 in) long and has a diameter of 1.9 cm (0.75 in) . The lamp surface output is 10.4 watts divided by the effective lamp surface area (81cm x B x 1.9 cm) which gives I_o = 21,880 $\mu w/cm^2$.

4.6.3 Quartz Jacket Cleaning

Wastewater often contains oil and grease and organic and inorganic materials which may form a coating on the quartz jacket in the UV reactor if the wastewater is unstable. Fouling of the quartz surfaces will block the UV transmittance into the water and poor performance of the UV unit will result. The length of time before the sleeves foul is dependent on the applications but can vary from 2 to 5 weeks. It is essential that the quartz sleeves remain clean during operation. Therefore an acceptable system must be developed to clean these surfaces. Currently several cleaning methods are available:

- Disassembly,
- Chemical cleaning,
- Ultrasonic cleaning, and
- Mechanical wiper.

4.6.3.1 Disassembly

This method consists of a mobile stainless steel cleaning tank which is sized to accommodate several complete UV modules. The tank is usually equipped with a rack above the tank to hold a module above the cleaning liquid. Cleaning solution is usually a weak acid. To clean the jackets* surfaces, the operator has to disassemble complete UV modules and lay them above the rack. Each individual jacket is cleaned manually. This method provides clean jacket surfaces but may present a down-time problem. The disassembly option leads to potential problems with disposing of cleaning solution, particularly the weak acids.

4.6.3.2 Chemical Cleaning

This method uses a pump to circulate a cleaning solution around an isolated reactor tank. The pump should provide enough head to create scouring action around the UV jackets. This method requires shutting down the UV unit and isolating it from the influent water during the cleaning. Cleaning cycle varies from 4 to 6 hours for a light-to-medium build-up and 12 to 24 hours for a heavy sediment build-up. The chemical wash is made up of a very dilute solution of anhydrous, fine-granular citric acid. After completion of the chemical wash, the process tank should be flushed out and rinsed with clean water. Flushed water may contain undesirable contaminants and should be recycled. This technique can effectively clean the UV jackets in place without removing the UV equipment from the reactor.

4.6.3.3 Ultrasonic Cleaning

This technique uses ultrasonic waves to clean the quartz tubes without the need to interrupt the treatment process. The ultrasonics may be operated on a timed cycle to serve both a cleaning schedule and prevention of the formation of scaling on jacket surfaces.

The advantage of the ultrasonic cleaning to other cleaning methods is that it apparently has no adverse effect on the life of UV lamps or on the internal components of the UV system. This is a new application, and current field use is limited.

4.6.3.4 Mechanical Cleaning

This method employs the concept of placing a wiper around each quartz jacket. The wiper is mechanically actuated and moved back and forth continuously or on a timed cycle along the surface. The effectiveness of the mechanical cleaning varies from system to system and the water quality. Mechanical wipers are subject to wear, therefore a replacement schedule should be considered. Depending on manufacturer, mechanical wipers may last from 6 months to 3 years in regular service before replacement is required. Replacement of wipers involves shutting down the UV system, removing the lamps and the quartz jackets before replacing the wipers.

Some proprietary wiper systems[17,18] are presented on Figures A-15 and A-16.

4.7 OXIDANT

Photo-oxidation involves the use of UV light and an oxidant to generate hydroxyl radicals. The hydroxyl radicals then attack the organic pollutants to initiate oxidation. The oxidant acts as the source of hydroxyl radicals. The two most powerful oxidants being used in the AOP treatment process are hydrogen peroxide and ozone.

Selection of the oxidants depends not only on the reactivity of the oxidant but the rate of reaction, the reaction conditions (e.g., pH and temperature) and characteristics of the residual products. To increase the rate of reaction, catalysts may be required in some cases. For most situations, a treatment scheme using chemical oxidation must be developed case by case. These oxidants are discussed in the following sections.

4.7.1 Hydrogen Peroxide

Because of the ability of hydrogen peroxide to abstract electrons from organic species, is a relatively strong oxidizing agent (oxidation potential of 1.78 volts). Hydrogen peroxide can also be a reducing agent. Commercially, it is available at 35, 50 and 70 percent. Hydrogen peroxide is widely applied in the treatment of municipal and industrial wastewaters, landfill leachates, and groundwater. Hydrogen peroxide has the following properties:

! odorless,

! miscible with water at all proportions,

! stable product at highly pure concentrations,

! activity decreases at a rate of 1 percent per year (in the absence of contaminants),

! decomposition rate accelerates in the presence of contaminants or metals,

PATENTED WIPERS
(U.S. PATENT NO. 5,227,140)
COURTESY OF PEROXIDATION SYSTEMS, INC.
FIGURE A-15

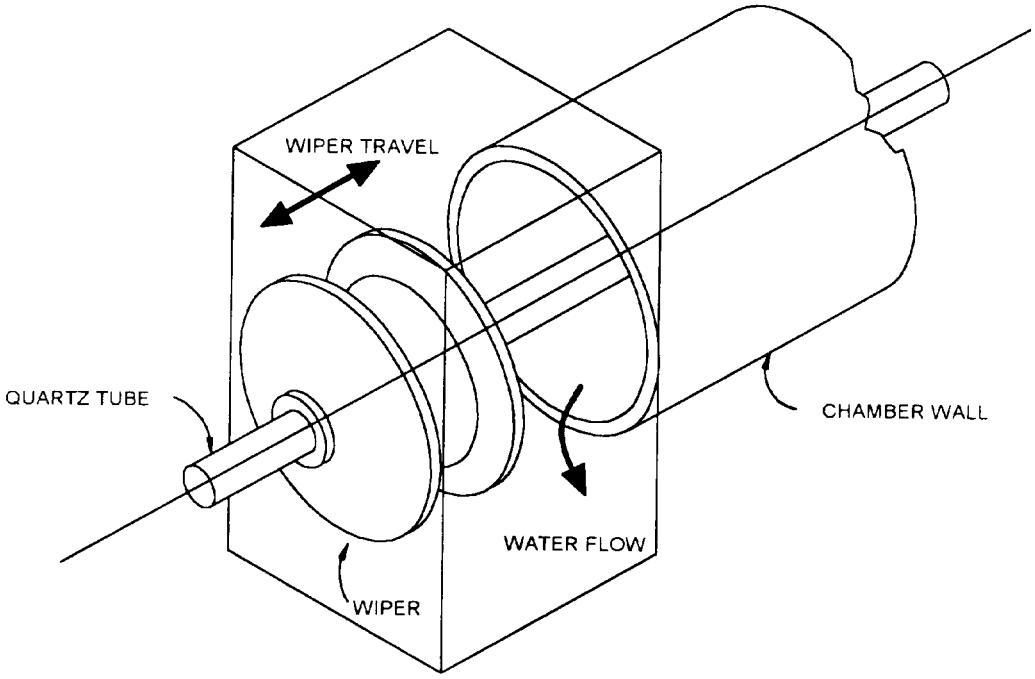

UV LAMP TRANSMITTANCE CONTROLLER (WIPER)
(U.S. PATENT #5,133,945 AND #5,266,280)
COURTESY OF SOLARCHEM ENVIRONMENTAL

UFIGURE A-16

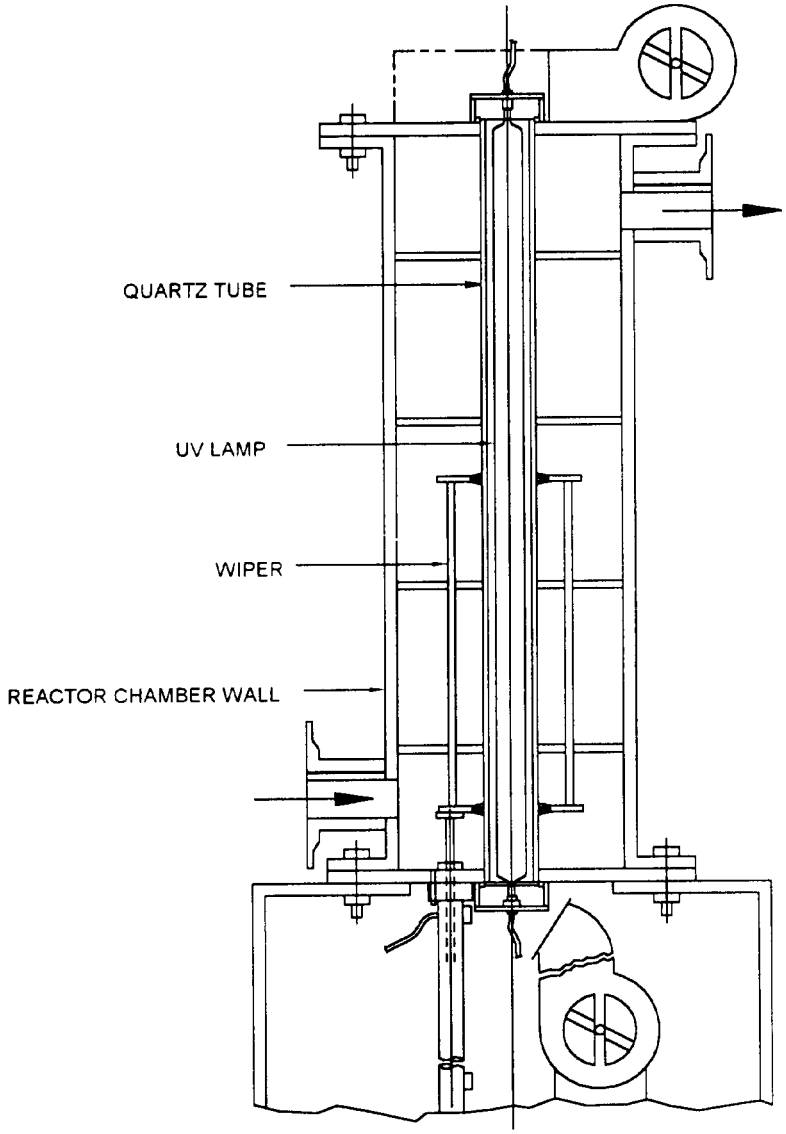

! environmentally acceptable in the receiving waters,

! decomposes to water and oxygen,

! unreactive with ammonia and many organic compounds, and

! relatively low extinction coefficient.

	35%	50%	70%
! Boiling point:	225°F	237°F	259°F
! Vapor pressure (mmg) :	23.3	18.3	10.1
! freezing point:	-33°C(-27°F)	-55°C(67°F)	-40°C(-40°F)

4.7.1.1 Hydrogen Peroxide Dosage

In the UV/Hydrogen Peroxide process, the hydrogen peroxide dose is selected based on UV absorbance, treatment unit configuration, contaminated water chemistry, and contaminant oxidation rates (e.g. COD) . The hydrogen peroxide dose will also vary with the concentration of the target compound and HRT. Typically, the peroxide dose is in the range of 40 to 200 mg/L. The suggested dosage is solely based on literature; the design dose should be based on a bench-scale or pilot-plant study.

Hydrogen peroxide dosage cannot be calculated directly, but the concentration is generally monitored during a UV/Hydrogen Peroxide system test by varying peroxide dosage to ensure that sufficient amount of hydroxyl radicals are present to fully oxidize the contaminants. Hydrogen peroxide concentration is measured by titanium sulfate method, or titration with ceric sulfate(50,51). A Real-time hydrogen profile monitor is currently being marketted. The advent of this analytical probe should allow for superior optimization of H_2O_2 dosage.

4.7.1.2 Hydrogen Peroxide Oxidation Kinetics

In a UV/Hydrogen Peroxide system, the reaction rate can be calculated using the following formula, assuming a pseudo first-order kinetic equation:

$$C_e = C_i \, e^{-kt} \qquad (4\text{-}5)$$

Where:

C_i = initial contaminant concentration in the influent, ppb, at time 0

C_e = final contaminant concentration in the effluent, ppb, at time t

k = rate constant, $minute^{-1}$

t = retention time, minutes

e = Log natural base equal to 2.71828

The rate constant can be derived by plotting retention time versus ln C_i/C_e. The slope of the line is equal to k. Since k and C_i are known, the retention time, which will achieve the desired effluent concentration, can be determined.

4.7.2 Ozone

Ozone is a disinfectant and strong oxidizing reagent (oxidation potential 2.1 volts) and is gradually replacing chlorine gas as a disinfectant. Ozone has the following properties:

! Molecular weight: 48
! Colorless gas with a pungent odor,
! Corrosive,
! Highly unstable at ambient conditions,
! Short half-life,
! Low solubility in water (500 mg/L at 25°C or 77º)F),
! Decomposes to oxygen at 35°C (89°F)
! Has high extinction coefficient,
! Boiling point 122°C (169°F)
! Melting point: -251°C (-420°F), and
! Gas density, 2.14 gr/L (0.009 lb/gal) @ 0°C (32°F)

Ozone has a high chemical reactivity and is a very powerful oxidizing agent. The solubility of ozone in water decreases as the system temperature increases. The ozone solubility in water as a function of temperature is shown in Figure A-17.

SOLUBILITY OF OZONE IN WATER
FIGURE A-17
(SOURCE 21)

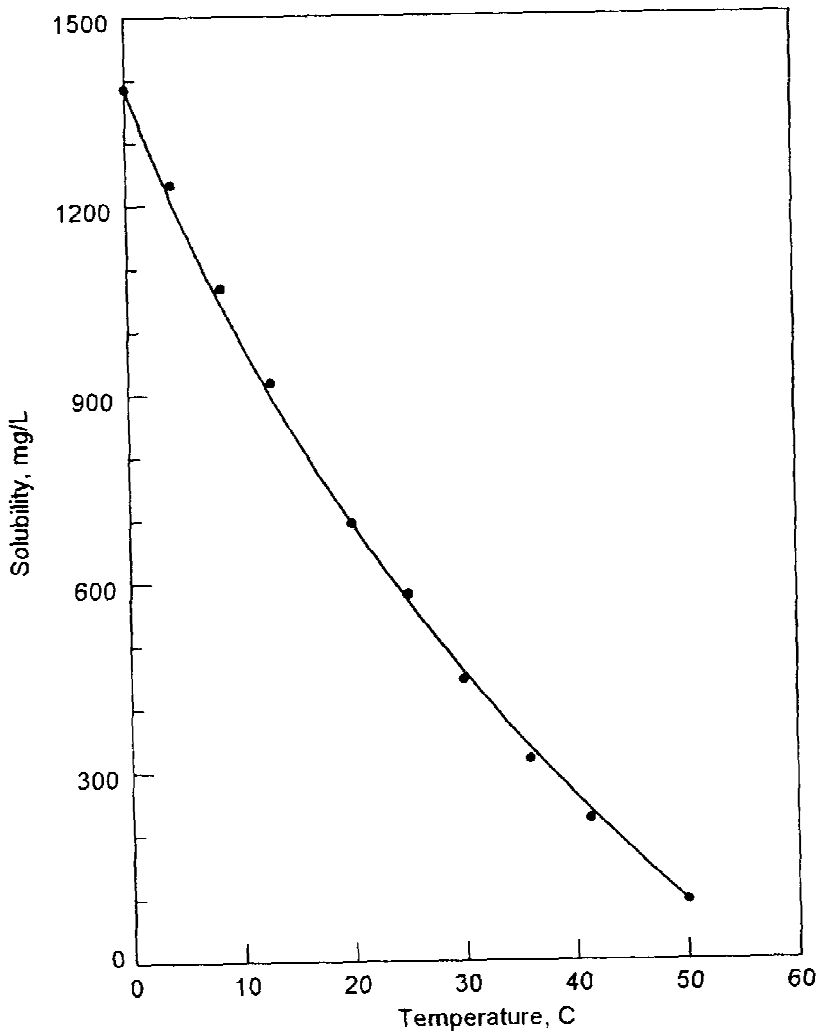

4.7.2.1 Ozone Dosage

The ozone dosage required to meet the treatment objectives is the most important parameter for ozone generation and contactor system design. Ozone dosage is the sum of ozone demand for reactions with the target compound, non-target substances and by self-decomposition. A treatability study is required to determine the ozone dosage requirement. Treatability study will also determine the most appropriate application point(s) in the process and the contact times necessary to accomplish the intended treatment objectives. Optimal contact time can vary widely depending on the water characteristics.

Ozone is a relatively nonselective oxidizing agent; the stream to be treated should not contain appreciable oxidizable material such as oil and grease that can compete for ozone under the conditions of treatment required to remove target compounds under specified treatment conditions. In general, the ozone oxidation reaction with easily oxidizable compounds occurs in a much shorter time than does the refractory one. For species that are inherently susceptible to ozone, the addition of UV light addition can reduce the ozone demand by a factor of two and higher.

Ozone dosage is commonly expressed in parts per million (ppm) of ozone or kilogram of ozone per kilogram of contaminant treated. The ozone dosage in ppm is obtained by multiplying the flow rate of ozonized gas by the concentration of ozone in the gas , and dividing by the flow rate of the waste stream (usually 2 percent by weight for air-processed gas and 4 to 10 percent for oxygen-processed gas)

4.7.2.2 Ozone Oxidations Kinetics

For a rapid oxidation reaction, the reaction rate can be expressed or converted to a stoichiometric relationship by plotting ozone dose versus $\ln[C/C_o]$ for exponential relationships or $[C/C_o]$ for linear relationships[21]. These relationships are represented by:

Exponential:

Linear:

$$\ln \frac{[C]}{[C_o]} = -k_d\,[O_3] \qquad (4\text{-}6)$$

$$[C]\ [C_o]\exp\left(-k_d\,[O_3]\right) \qquad (4\text{-}7)$$

$$\frac{[C]}{[C_o]} = k_d\,[O_3] \qquad (4\text{-}8)$$

$$[C] = [C_o]\ (k_d\,[O_3]\ ) \qquad (4\text{-}9$$

where, k_d = empirical stoichiometric coefficient (L/mg)
$[O_3]$ = ozone dose (mg/L)
C = ozone concentration at time t
C_o = initial ozone concentration

The empirical stoichiometric coefficients define the relationship between the transferred ozone dose and level of treatment. The coefficients can be used to calculate the transferred ozone dose required for a given or desired level of oxidation. See design example in Appendix E.

The weight ratio of ozone to contaminant treated is obtained by multiplying ppm ozone applied with the residence time of the waste stream in the ozone contact chamber and dividing by the difference of the contaminant concentration (also in ppm) in the influent and the effluent streams. The weight ratio varies with the type of contaminants and the type of catalyst selected, if used. In most applications, the amount of ozone applied is about 1.5 to 3 kg (3.3 to 6.6lbs) of ozone per kilogram (2.2 lbs) of contaminant removed if ozone is the only oxidant utilized in the oxidation process[52].

In summary, the oxidant usage is specific to the wastewater environment. To translate results from one particular wastewater

to another is difficult. For most situations, a treatment scheme using UV/Oxidation must be developed by a treatability study to determine optimum dosage.

4.7.3 Ozone Generation

Ozone is generated when an oxygen molecule is sufficiently excited to dissociate into oxygen atom; further collisions with oxygen molecules cause the formation of the ozone molecule as shown below:

$$O_2 \text{ ------}\rightarrow 2\,[O] \qquad (4\text{-}3)$$

$$2[O] + 2O_2 \text{ ------}\rightarrow 2O_3 \qquad (4\text{-}4)$$

The source of excitation is by UV light or high voltage. Commercially, ozone is generated by passing air or oxygen through high irradiation of an electrical field. Today, many different types of ozone generators are available. Most operate on corona discharge principle.

Due to its high chemical reactivity and molecular instability, ozone is short-lived in most environments. In aqueous solution, ozone gas has a half-life of about 20 to 30 minutes at 20°C[21]. If other oxidant-consuming materials are present, the half-life is even shorter. Consequently, there is no natural resource for ozone, nor is it practicably containerized; it is normally produced where it is to be used, on an as-needed basis.

4.7.3.1 Corona Discharge Ozonator

The corona discharge ozonator is simple in construction. Essentially, it consists of two electrodes separated by a gap, and a dielectric material is inserted into the gap. Air or oxygen as process gas is introduced into the gap, and sufficient voltage potential is passed between the two electrodes to cause current to flow through the dielectric material and the gas. The electrodes can be flat, tubular, or any other design configuration which holds two opposing faces parallel; dielectric material can be glass plates, medalist glass tubes, or ceramic plates. The voltage will be a function of the gap distance and

electric material. A corona discharge ozonator is illustrated in Figure A-18.

A variety of types of commercial scale ozone generators is available, and their capacities range from 500 g/hr to 500 kg/day (0.001 lbs/hr to 1,000 lbs/day). The ozonators are classified based on the method of cooling.

The following types of ozonator are commercially available:

- horizontal-tube, water-cooled;
- vertical-tube, water-cooled;
- vertical-tube, doubled-cooled (oil and water);
- Otto-plate-type, water-cooled; and
- Lowther-plate-type, air-cooled.

The current interest in ozone generators makes it likely that other types of ozone generators will be developed, but those listed above are the types currently marketed actively.

4.7.3.2 Other Ozonators

Alternative methods of ozone generation include electrolytic ozone generation and radiochemical ozonation. These methods of ozonation will not be discussed in detail in this ETL, instead a summary of the literature is offered, since currently, neither alternative methods of ozone generation has a significant application in industry.

In electrolytic ozone generation, ozone is synthetically produced by electrolysis of sulfuric acid. Potential advantages of this type of ozone generator are:

- simplicity of equipment, hence more adaptable use in remote areas;
- the use of low-voltage DC current;
- no feed gas preparation;
- possible generation of ozone at high concentration; and

SCHEMATIC DIAGRAM OF CORONA DISCHARGE OZONE GENERATOR

FIGURE A-18

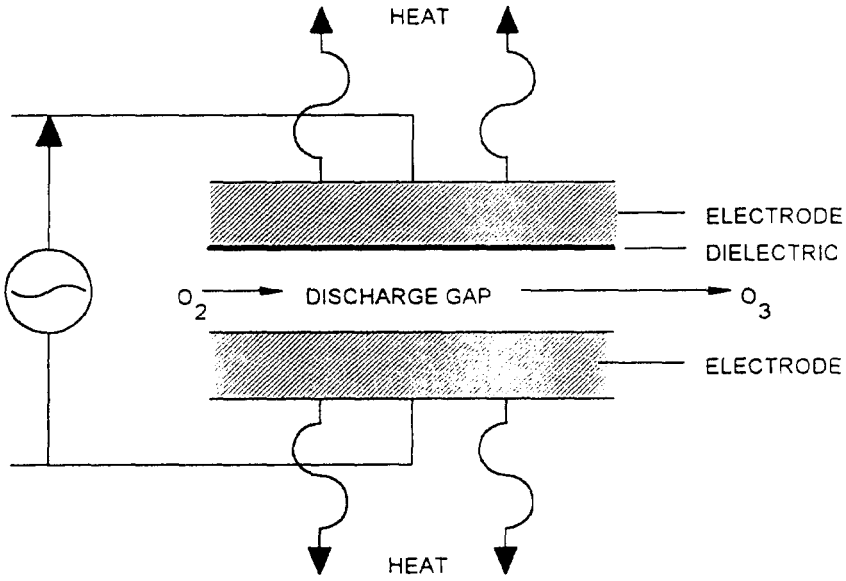

! generation in water, eliminating the ozone-to-water contacting processes.

The disadvantages of this ozonator are:

! high current density, hence thermal overloading;

! requirement for special electrode to resist corrosion and low-conductivity water;

! production of free chlorine if chloride ion is present in water or electrolyte; and

! higher energy cost by a factor of 2 to 5 compared to that of corona discharge (27).

In radiochemical ozone generation, the ozone is formed via high energy irradiation of oxygen by radioactive rays. In static systems with oxygen at atmospheric pressure and at -78°C(-180°F), 0.5 percent by volume ozone (10 g/m^3 NTP) can be obtained. In static liquid oxygen, concentrations as high 6 percent by weight or 70-75 g/L (liquid) are obtainable[21].

The advantages of this process are:

! High ozone yield, and
! Possibility of using waste fission isotope.

The disadvantages of this process are:

! Difficulty in removing fission products, and

! Difficulty in conditioning a suitable gas stream containing ozone[21]

Due to its technological complexity, the radiochemical ozone generation process has not yet found significant application in water and wastewater treatment.

4.7.4 Process Gas Preparation

Preparation of feed gas for the corona discharge ozonator is extremely important because of the need for a clean, moisture-free gas that will protect equipment from damage. There are two feed gas systems to consider:

! air-feed gas systems, and
! oxygen-based feed gas systems.

Air-feed gas systems and oxygen-based feed gas systems are discussed in the following sections.

4.7.4.1 Air-Feed Gas Systems

When air is used for ozone generation, proper preparation is critical. Ozone generated with moist air forms nitric acid. In normal operation, an estimate of 3 to 5 grams of nitric acid is produced per kilogram of ozone. As the amount of water vapor present increases, larger quantities of nitrogen oxides are generated. Hydroxyl radicals are also formed that combine with oxygen radicals and ozone[21]. It is essential that a dry process gas is applied to the corona discharge to limit nitric acid formation, thus protecting the generators and to maintain the high efficiency of the ozone process. Equipment for air systems include the following:

! an air compressor,
! an air reservoir,
! air cooler,
! air filter,
! air dryer, and
! miscellaneous controls.

Additional equipment used in an air preparation system may include after-coolers and various filtration cartridges for removal of the fine particulates from desiccant dryer.

Design of feed gas preparation equipment should be reviewed carefully with ozone equipment manufactures, taking the extremes of site specific ambient air temperature and humidity into account. Standby systems should be provided for all major

components with controls and alarms to monitor the performance at various stages through the system.

4.7.4.2 Oxygen-Based Feed Gas Systems

Oxygen gas has about five times as many oxygen molecules as the same volume of ambient air. Therefore, ozone produced from oxygen is twice as concentrated as ozone produced from air. Consequently, use of oxygen reduces both power consumption and maintenance requirements. Oxygen ozonators are most economically operated at ozone concentration of approximately 6 to 10 percent by weight compared to 1 to 2 percent using air. Systems requiring under 500 pounds of ozone per day usually favor the use of air for process gas.

Oxygen can be generated on site or purchased from an outside source. Relatively, pure liquid oxygen has minimal equipment requirements, thereby reducing initial capital investment as compared with air preparation and on-site oxygen generation systems.

Liquid oxygen systems consist of insulated liquid storage tanks, evaporators, and flow meter. The following considerations should be given to the use of liquid oxygen:

! Viability of ozone generation,
! Sufficient redundancy to permit maintenance,
! Reliable source of supply,
! Future market condition change,
! On-site generation vs commercial supply, and
! safety of handling liquid oxygen.

4.7.5 Ozonator Cooling Requirements

The efficiency of ozone production is very low, and about 15 to 26 kWH are required to produce 1 kilogram of ozone[53]. A large part of the energy consumed will be converted to heat which must be removed. For the corona discharge ozone generator, the operating temperature of the ozone generator dielectrics is critical 50°C to 55°C (120°F to 130°F) . Not only does ozone output vary as a function of generator temperature, but also, as the ozone generator temperature increases, the dielectric material changes thermal characteristics and is subject to

rupture. To minimize the decomposition of the ozone, common practice limits the temperature at the outlet from the generator to less than 50°C (122°F) . Therefore, cooling the ozonator dielectric is very important, and the highest cooling water temperature should be used to size the generator.

Potential condensation problems must be addressed in the case of low-cooling-water temperature. Appropriate insulation must be provided for the cooling water circuit, including the ozone generator. Hot water coming out of ozone generator can be cooled by a heat exchanger and/or a chiller. Schematic diagram of tube-type water cooled ozone generator is illustrated on Figure A-19.

4.7.6 Ozone Contacting Unit

Ozone must be transferred from the gas phase to the liquid phase to perform its intended function(s) in the treatment of wastewater. Because ozone is only slightly soluble in aqueous media, ozone dissolution in water involves bringing bubbles of ozone containing air or oxygen into contact with water. Contacting units to provide ozone for various ozonation applications will vary by type, design, operating conditions, the specific functions of ozone at the points of application, and the design of the contact chambers. Economic consideration normally require that the design of a contacting unit maximize ozone transfer for the intended purpose and/or reaction.

Factors that influence the selection of a contacting system include;

! Kinetics of the reaction (fast or slow),
! Potential foaming problem,
! Ozone dosage,
! Degree of contaminant removal, and
! Air flow.

Factors that affect the mass transfer of ozone into liquids include:

! Wastewater characteristics (i.e., ozone demand),
! Concentration of ozone in the gas,

SCHEMATIC DIAGRAM OF TUBE TYPE WATER COOLED OZONE GENERATOR

FIGURE A-19

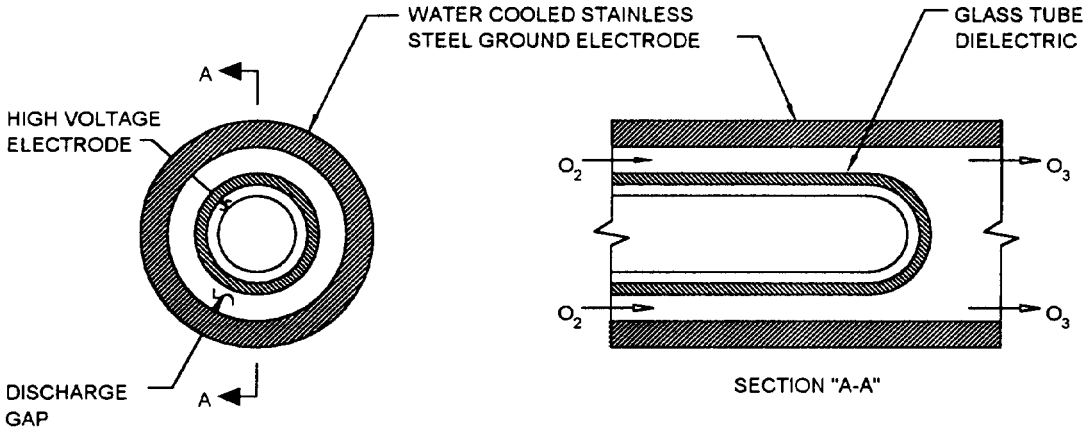

! Process gas composition (air vs oxygen),
! Method and time of contact,
! Pressure and temperature,
! Type of ozonator,
! UV lamp used, and
! Oxidants and/or catalyst.

A number of techniques exist for dissolution of ozone in the liquid to be treated. These include the following:

! Conventional fine bubble diffusion,
! Turbine mixers,
! Spray towers (liquid disperses in a gas)
! Packed columns,
! Bubble plate or sieve plate,
! Deep U tube,
! Sweeping porous plate diffuser contactor, and
! Submerged static radial turbine contactor.

Air-bubble sparger and eductor are the most common ozone contacting systems being utilized. Turbine or venturi type mixers are recommended for water containing a high level of suspended solids. Because detailed descriptions of these techniques are beyond the scope of this ETL, information is provided in references[3,21].

4.7.7 Ozone Decomposer

The off-gases from the ozone contact chamber may contain as much as 5 to 10 percent of the ozone charged to the primary contact chamber. When contactor off-gas is recycled to an upstream contact chamber, the off-gas from this upstream chamber may still contain as much as 0.015 to 0.038 percent ozone by weight or 0.2 to 0.5 g/m^3[21] at normal condition (NTP) . These concentrations far exceed the maximum allowable ozone concentration for an 8-hour workday of 0.0002 g/m^3 or 0.1 ppm by volume. Ozone gas bubbled through contaminated water may also result in VOC removal through stripping.

To protect personnel, equipment, structural components, and the general environment, the ozone and possible VOC*s in these off-gases must be destroyed. If the volumes of contactor off-

gases are not large, it can be cost-effective to recycle them back to an early-stage oxidation step in the total wastewater process or the front of the process for pretreatment (metal removal) or for oxidation (in multistage reactors) . As part of a dual ozonation process, the relative costs of ozonation for the terminal step can also be lowered[3].

Although the primary function of the decomposer unit is to remove ozone, significant amounts of VOCs can be destroyed. Proprietary designs are manufactured by some AOP vendors to remove VOCs such as TCE, 1,1-DCA, 1,1,1-TCA and vinyl chloride in the off-gas[11,19].

Current design practices include thermal ozone destruction, thermal/catalytic destruction systems, and/or adsorption on granular activated carbon (GAC)

4.7.7.1 Thermal Ozone Destruction

Thermal ozone destruction systems rely on the decomposition of ozone at increased temperatures. At room temperature and in a clean vessel, the half-life of ozone may range from 20 to 100 hours in dry air. At 120°C (248°F), the half-life is reduced to 11 to 112 minutes. In the thermal ozone destruction unit, the off-gas is heated to a prescribed temperature, typically between 300°C and 350°C (572 to 662°F) for a short period of time, usually less than 5 seconds[21]. Other thermal catalytic systems operate at 96°C (150°F) temperature. Since discharge of gases at these elevated temperatures also raises environmental concerns, a heat recovery heat exchanger is usually provided.

4.7.7.2 Catalytic and Thermal/Catalytic Destruction Systems

The use of a catalyst for ozone destruction is a fairly recent development, but has become the most commonly used method in the United States today. Specific information regarding the composition of catalysts is frequently treated as proprietary. Many catalysts are metal based such as palladium, manganese, nickel oxides, hydroxides, or peroxides. Normally, 0.55 to 0.88 lb of catalysts are required to treat 1 standard m^3/h (0.6 CFM) of off-gas[21].

Moisture condensation on the catalyst reduces the efficiency of the catalytic and thermal destruction decomposer, therefore, the water-saturated contactor off-gas should be heated above its dew point. Piping should not drain back to the catalyst bed to prevent the condensate from ruining the catalyst. Figure A-20 illustrates a thermal/catalytic ozone destruction unit.

4.7.7.3 Other Ozone Destruction Methods

Activated carbon adsorption has been used in the past, primarily in small ozonation systems. Carbon use is limited for safety reasons, because carbon generates considerable heat. Carbon is consumed by slow combustion resulting in the formation of carbon fines which may be explosive under the conditions existing in the destruction unit (U.S. EPA 1986)

4.7.8 Design and Selection of Ozonator

Design of the ozone production facility, should consider the reaction rate, economics of procuring and operating the ozonator system, and ensure total ozone decomposition. Size constraints and concentration of target contaminants must also be considered.

Voltage and current must be considered in transformer selection. To adjust ozone output over a desired range (approximately 5 to 1) , variable voltage transformers are normally used. Ozonators operate from line voltage of 120, 230, and 440 volts, single and three-phase, 50 to 60 Hz. The ozonator is designed based on the frequency of the power supply distribution grid. In the U.S. most ozonators operate on 60 Hz, while the 50 Hz ozonators are commonly used in Europe.

When the standby equipment is to be determined, two primary factors must be taken into account:

! The turn-down range of ozone production required (i.e., capacity)

! The degree of modularity as it relates to ozone production equipment and contact system.

THERMAL-CATALYTIC DESTRUCT SYSTEM
FIGURE A-20
(SOURCE 21)

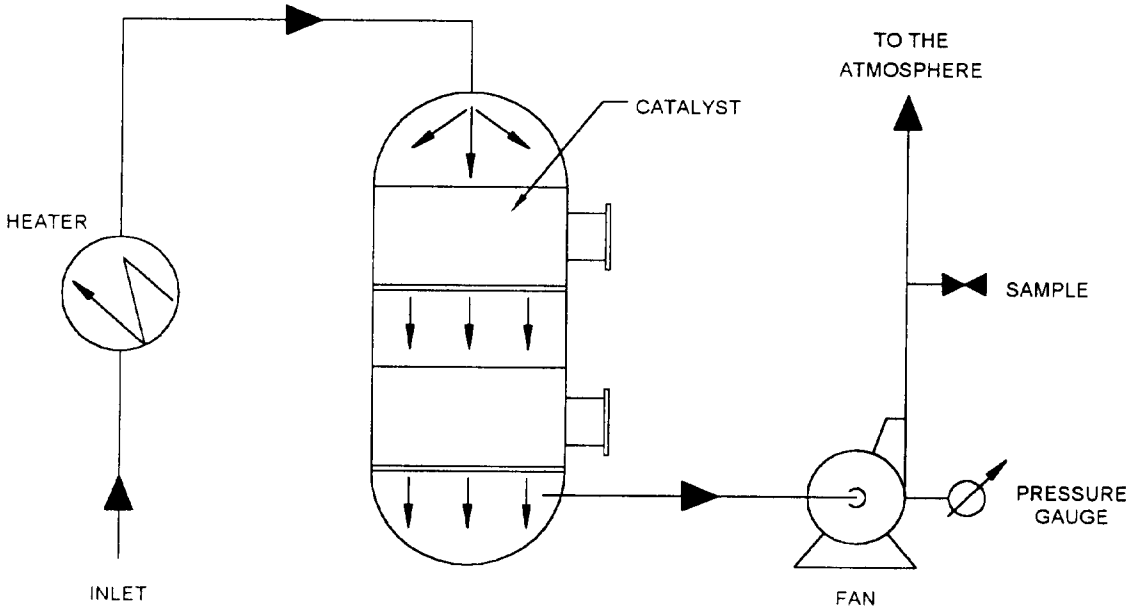

4.8 CATALYSTS

Catalysts discussed in this section are additives in dark homogeneous solution (such as the peroxone) and in UV-based homogeneous solution (such as UV/H_2O_2, UV/O_3) and UV-based heterogeneous, photolysis, and UV semi-conductor processes.

A catalyst is an agent which, if added to the process, alters the rate of a chemical reaction but itself is chemically unchanged at the end of reaction. A catalyst has no influence on the thermodynamics of a particular process. The equilibrium point remains still the same, but the rate of a reaction*s approach to equilibrium is changed. However, if several parallel or consecutive reactions are involved, the end products may be altered because one reaction path is preferentially catalyzed[52].

4.8.1 Catalyst Types

Generally, catalytic reactions are divided in two types, homogeneous catalysis and heterogeneous catalysis.

In homogeneous catalysis, all the reactants are contained in a single phase, for example, reactions between gases and vapors that are catalyzed by other gases and vapors, and/or reactions in a liquid medium catalyzed by a catalyst in solution.

In heterogeneous catalysis, the reactants and catalyst are contained in a multi-phase system and the catalyst is usually a solid, for example, the gaseous or liquid reaction in the presence of a solid catalyst.

4.8.2 Catalytic Application to Waste Treatment

Catalysts are essentially applicable to all types of organic compounds including hydrocarbons, halogenated hydrocarbons, nitrogen, sulfur and phosphorous. Catalysts are also applicable to oxidation of cyanides, carbonyls, and sulfides, as well as oxidation-reduction reactions involving heavy metals. Catalysts are used in some AOP processes to increase the rate of reaction, reducing oxidant dosages.

4.8.3 Homogeneous Catalysis

In dark homogeneous solution, hydrogen peroxide with a catalyst such as ferrous sulfate (Fenton*s reagent) has been used for oxidizing phenol and other benzene derivatives according to the following theoretical reaction:

$$H_2O_2 + Fe^{+2} \text{------>} HO^{!} + OH^{-} + Fe^{+3} \qquad (4\text{-}9)$$

In light homogeneous catalysis, the UV light acts on chemicals but more importantly it acts as catalyst to generate hydroxyl radicals to improve ozone or hydrogen peroxide efficiency. Catalysis for photocatalytic destruction of organic compounds in homogeneous media depends on the compounds present to be destroyed.

Some AOP vendors manufactured special catalysts to use with their equipment to treat refractory organic compounds effectively. Specific information regarding the composition of catalysts is frequently treated as proprietary. Vendors will not disclose proprietary information and the identification of a catalyst is given only by trade name designation.

4.8.4 Heterogeneous Catalysis

This chapter will discuss the applications of the heterogeneous catalysis in the destruction of residual ozone in the off-gas, and destruction of organic contaminants in water.

4.8.4.1 Destruction of Residual Ozone in the Off-Gas

Catalysts utilized for the destruction of residual ozone in the off-gas are metal oxides such as palladium, manganese, or nickel oxides. In the presence of the catalyst, ozone is decomposed to oxygen under high temperature range between 300-350°C (572-662°F)[21]. Some catalysts operate at a much lower temperature, about 65°C (150°F)[5]. The catalyst is coated on a support medium, such as aluminum oxide granules. About 0.25 to 0.4 kg (0.55 to 0.88 lb) of catalyst is required to treat 1 standard m^3/h of off-gas[21]. Most catalysts are treated as proprietary, and will be sold with the equipment supplied. Catalysts are toxic and should be disposed of as hazardous materials. Exhausted catalyst is normally disposed of by the catalyst supplier.

4.8.4.2 Destruction of Organic Contaminants in the Wastewater

A number of experiments on heterogeneous photocatalysis for chemical conversions have been conducted. These conversions include oxidation of carbon monoxide to carbon dioxide, the oxidation of CN, the oxidation of sulfide, and the decarboxylation of acetic, propionic, and butyric acids[54,55]. Other experiments have been carried out to investigate the photo-degradation of chloroform and urea in aqueous solutions near UV and visible radiation using solid catalyst. These experiments also supported the theory of photo-degradation of organic compounds using a semiconductor as catalyst and appeared to be promising alternative for water and waste water purification[56]. UV-based heterogeneous catalysis is discussed in the following section.

4.9 SEMICONDUCTOR CATALYTIC ADVANCED OXIDATION PROCESS

During the past decade there has been significant growth of semi-conductors, in particular, systems as photocatalysts for carrying out the photochemical transformation and mineralization of organic compounds. The photocatalytic decomposition of organic compounds on semiconductor surfaces (termed heterogeneous photocatalysis) involves the following steps:

1. In the presence of oxygen, many n-type semiconductors, such as the anatase form of titanium dioxide, when illuminated with light (8<400 nm) of energy higher than the band gap, generates excess electrons in the conduction band (e^{-}_{CB}) and positive “holes" (h^{+VB}) in the valence band.

2. Electrons migrate to the illuminated surface and participate in half-cell reactions of a closed, catalytic cycle that produce hydroxyl radicals (0H$^{!}$).

3. These hydroxyl radicals and other highly oxidizing initial products of this indirect photochemistry go on to attack oxidizable contaminants[31].

The following reactions are proposed[57]:

$$TiO_2 + hv \text{ -----> } e^-_{CB} + h^{+VB} \quad (4\text{-}10)$$

$$h^{+VB} + H_2O \text{ -----> } OH^! + H^+ \quad (4\text{-}11)$$

$$h^{+VB} + OH^- \text{ -----> } OH^! \quad (4\text{-}12)$$

Excess electrons in the conduction band probably react with molecular oxygen to form superoxide ions:

$$e^-_{CB} + O_2 \text{ -----> } O_2^{!-} \quad (4\text{-}13)$$

$$2O_2^{!-} + 2H_2O \text{ -----> } 2OH^! + OH^- + O_2 \quad (4\text{-}14)$$

A conduction band and valence band in TiO_2 as a semiconductor are illustrated on Figure A-21.

One particular aspect of the semiconductor photocatalysis is that the reaction can proceed in a very slow conductivity (i.e., slow to conduct a electric charge) solution[54].

4.10 SELECTION OF AN AOP TREATMENT PROCESSES

The UV/Oxidation technology is continuing to evolve, and because research and development continue to improve the technology, alternative techniques should be investigated to select the most effective system for a given situation.

Evaluation and selection of an UV/Oxidation system between various vendors who manufacture the systems are usually based on a two-phase screening process which uses two criteria[59]:

! the first criterion is defined as the ability of the vendor to treat the waste constituent; and

! the second criterion is cost related.

Ability of Vendor: Ability of the vendor can be evaluated through the EPA*s Superfund Innovative Technology Evaluation

COURTESY OF MATRIX PHOTOCATALYTIC INC.
CONDUCTION BAND AM) VALENCE BAND IN TiO_2 AS A SEMICONDUCTOR
FIGURE A-21

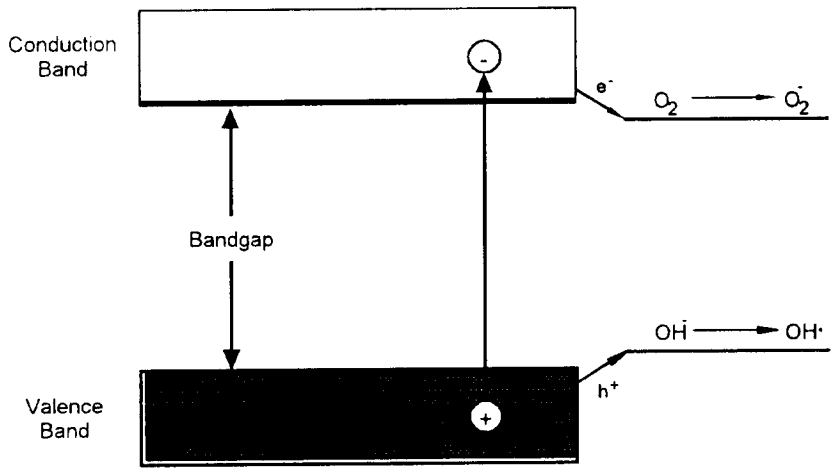

(SITE) Program[60]. Since 1987, many AOP technologies were evaluated under the EPA*s SITE Program which evaluates newtreatment methods through technology demonstrations designed to provide engineering and cost data for selected technologies.

One of the most important aspects of the SITE Program is the Demonstration Program which evaluates field or pilot-scale technologies that can be scaled up for commercial use.

The EPA SITE Demonstration Program provides performance engineering and cost information to evaluate new technologies. With this information, potential users can make informed decisions on whether to use these technologies to remediate hazardous waste sites. Specifically, potential users can use this information to compare the technology*s effectiveness and cost to other alternatives, and make sound judgments regarding applicability of the technology for a specific site. The results of the demonstration identify possible limitations of the technology, the potential need for pre- and post-processing of waste, the type of wastes and media to which the process can be applied, the potential operating problems, and the approximate capital and operating costs. The demonstrations also permit evaluation of long-term risks.

Technologies both new and those that have been in existence for sometime, and that have not been evaluated under EPA site program can be evaluated by considering these factors:

! Have available technologies been fully proven by commercial uses with complete cost and performance data?

! Can proposed technology be applicable to hazardous site clean-up under consideration?

! Does equipment provide mobility and flexibility?

! What are the advantages over existing comparable technology?

! What is the effective operating range of the proposed process?

! What is the material handling capability?

! Have basic process safety, environmental, and health risks been considered and found to be within reasonable limits?

! Can proposed technology be accepted by general public?

! Can vendor provide performance warranty? and

! Does the proposal meet the plan and specifications?

In addition to the above concerns, a number of points should be considered:

! Efficiency of cleaning method. Are only tubes cleaned or walls too? Does reactor have “dead spot” for solids accumulation?

! Are there potential leak points which would be hazardous in treating very toxic wastes?

! How are the oxidants and/or catalysts introduced?

! What type of service network is available for problem solving and routine preventive maintenance?

! What is vendor experience? Number of units, and year(s) of demonstrated performance?

! What is vendor*s financial position? Can they support the equipment they sell?

Answers to the above questions are a measuring scale to evaluate the ability of a technology to treat a specific waste constituent.

One should keep in mind that with the technologies available, no one solution is universally applicable to all cases. In some cases, the best method for the treatment of contaminated water depends upon the selection of the proper combination of treatment processes. Competing technologies can work together to produce a solution that is both problem solving and cost effective. When a

stream containing a mixture of pollutants does not lend itself totally to one particular treatment technique, the engineer may find it more cost effective to use these in sequential treatment. Combined treatment is discussed in Chapter 3.

Cost: Cost plays a critical and often decisive role in final process selection. In many cases, several different treatment technologies can achieve the required effluent quality, but capital and operating costs will differ significantly.

Comparison and selection of alternatives require determination of both capital and operation and maintenance (O&M) cost, followed by development of accurate final cost estimates. Cost comparison and selection of alternatives are discussed in greater detail in Chapter 13, Acquisition.

4.11 TREATMENT COST ESTIMATE

The cost of treatment for an AOP system includes:

! Capital cost, and
! Operating cost.

The capital cost includes equipment cost and installation cost. The capital cost is water and site-specific (i.e., the water flow rate, the type and concentration of the contaminants and the treatment system used)

One vendor has developed a method to estimate the capital and the operating costs of the UV/H_2O_2 system. The cost is based upon the Electrical Energy per order (EE/O) and UV dose[35].

The EE/O is a scale-up parameter and is a measure of the treatment obtained in a fixed volume of water as a function of exposure to TN light. EE/O is defined as the kW of electricity required to reduce the concentration of a compound in 1,000 gallons by one order of magnitude or 90 percent. The unit for EE/O is kWh per 1,000 gallons. For example, if it takes 10 KWh of electricity to reduce the concentration of a target compound from 10 ppm to 1 ppm (1 order of magnitude or 90 percent) in 1,000 gallons of groundwater, then the EE/O is 10. It will then

take another 10 kWh to reduce the compound from 1 ppm to 0.10 ppm and so on.

The EE/O is specific for each water and will vary for different applications.

The EE/O is calculated in two steps as follows:

1. Calculate UV dose $= \frac{\text{lamp power (kW) x time (hr) x 1,000}}{\text{batch volume (gal)}}$
   = kWh/1,000 gals

2. EE/O $= \frac{\text{UV Dose (kWh/1,000 gal)}}{\text{kWh/1,000gal/order}} = (\log(\text{init/final})$

Where <u>init</u> and <u>final</u> refer to the initial and final concentration of target compounds in consistent units. If there is more than one compound, each requiring a different level of treatment, the one requiring the greatest UV dose is used to calculate the design EE/O.

The EE/O measured is specific to the water tested and to the compound of interest, and will vary for different applications[35]. Typical EE/Os for common contaminants are presented in Table A-G.

With the EE/O determined, the UV dose required in a specific case is calculated using the following equation:

UV Dose = EE/O * log(initial/final)

3. Operating Cost

Once the required UV dose is known, the electrical operating cost associated with supplying the UV energy can be calculated by the following equation:

Electrical Cost ($/l,000gal) = UV dose (kWh/l,000gal) *Power Cost ($kWh)

Total Operating cost($/l,000gal) = Electrical cost + H_20_2 Cost.

where,

Peroxide Cost = H_2O_2 conc. (in ppm) * ($/ppm/l,OO0 gal).

5.0 UV/OXIDATION PROCESS CONTROL & INSTRUMENTATION

5.1 PROCESS CONTROL

AOP has a number of applications, as discussed in Chapter 3, UV/Oxidation Applicability. Process control must, therefore, be selected to suit the purpose. For particular applications, some control systems will be more sophisticated than others. In the field of continuous-control systems, to ensure fully automated operation, designers have a number of alternatives.

5.2 OPERATIONAL CONTROL

Operational control parameters include the following:

- Flow control,
- Temperature control,
- Oxidant control,
- UV light control, and
- Ozonator process air control, if used.

These parameters are discussed in the following sections.

5.2.1 Flow Control

Flow control is required on the following streams:

- Influent;
- Effluent;
- Cooling water, if required; and
- Air to ozonator, if required.

Influent flow must be controlled, because the major AOP equipment and support equipment are designed based on the flow. These include:

- Pretreatment, if required;
- Equalization tank and/or effluent tank, if required;
- UV reactor;
- Oxidant addition; and
- Pumps and piping.

Flow measurement must also be required on the effluent stream prior to discharge for regulatory compliance.

Water or air is used to cool the ozonator or the UV reactor. Both air and water need to be controlled to ensure process performance. For safety reasons, a flow switch must be installed to shut down the ozone generator, or UV lights in the reactor if there is a lack of water or air.

5.2.2 Temperature Control

Temperature control is required at these locations:

! UV reactor to avoid overheat conditions;
! Effluent discharge to comply with permit;
! Cooling water loop to avoid equipment/plant shut down; and
! The heater in the ozone decomposer to avoid ozone escape.

The design should also be concerned about temperature, if a closed-loop cooling system is utilized.

5.2.3 Oxidant Control

Oxidant control includes ozone control and hydrogen peroxide control.

5.2.3.1 Ozone Control

Ozone dosage can be controlled by several means:

! influent water flow rate;
! ozone residual in water;
! cascade control; and
! closed-loop control.

Each of these control methods is discussed below.

Influent Water Flow Rate: This control system is based exclusively on the flow rate of the influent water, with the ozone dosage previously having been determined during pilot plant tests, in the laboratory, or on site. This system does not provide automated control that takes into account variations in water quality, which can occur suddenly at some groundwater sites.

This control scheme is possible only under the following conditions:

! The power of the ozone generator can be varied to pace on influent flow without altering the gas throughput. The ozone concentration in the gas may, however, vary according to the operating conditions.

! The flow of ozonized gas can be changed at the same time as power to the ozone generator is changed in order to maintain a constant operating ozone concentration. In addition to a flow-rate indicator, this method also requires continuous metering of the ozone concentration in the gas at the outlet of the ozone generator, which enables constant ozonized gas transfer conditions to be maintained in the contact chamber[21].

Ozone Residual in Water: Process control of modern ozonation systems is achieved by monitoring residual ozone in water just after the water exits the contact chamber. An analyzer is linked to the ozonator so that if the level of residual ozone drops below a predetermined level, the ozonator is signaled to increase ozone production.

The key control device will be a residual (dissolved) ozone analyzer. The residual ozone recorded by the sensor is compared to a set value, and the ozone dosage is adjusted. The plant can operate at a fixed or variable ozonized gas concentration. While this method of control allows for fluctuations in the quality of the water to be treated (the residual ozone is maintained independent to the ozone demand of the waste) , it can be used only if the facility is operating at a relatively constant flow rate. If this is not the case, cascade control must be provided.

Residual ozone can be measured by a spectrophotometer, fluorometry or Indigo Calorimetric Method 4500-O_3 B or 40 CFR Part 50 Ultraviolet Photometric Procedure.

Precautions should be taken when using Indigo Calorimetric method to avoid interferences. Hydrogen peroxide and organic peroxide decolorize the indigo reagent very slowly. Hydrogen peroxide does not interfere if ozone is measured in less than 6 hours after adding reagents. Organic peroxides may react more rapidly. Other compounds which interfere with Indigo Calorimetric method include Manganese, Mn(II) , Chlorine, and Bromine[61].

Cascade Control (or Pace and Trim) Cascade control combines the two control modes described above in a cascade sequence. The primary control initially regulates the ozone production in proportion to the water flow rate (pacing) while the secondary control accurately adjusts the treatment based on the residual dissolved ozone level[21].

Closed-Loop Control Based on Off-Gas Concentration:

Another method of ozone generation control is to measure the residual ozone present in the off-gases exiting the contact chamber (reactor) . This adjustment requires a constant ozone concentration in the ozonized gas. Therefore, the variations of residual ozone in the off-gas are solely those due to the fluctuations in the quality of water and not to variations of conditions in which the ozonized gas injected into the water. Cascade control is illustrated in Figure A-22.

5.2.3.2 Hydrogen Peroxide

Hydrogen peroxide is a relatively stable solution, and introduction to the water is done via a metering pump. The feed pump usually has a variable speed control and a manual stroke adjustment. The control of peroxide dosage is similar to the first two methods suggested for ozone dosage control described above. Hydrogen peroxide does not produce a gas stream exiting the reactor, thus off-gas control is not necessary.

The conversion of H_2O_2 to dissolved oxygen proceeds according to the following equation:

$$2\ H_2O_2 \text{ ----------> } O_2 + 2\ H_2O \qquad (5\text{-}1)$$

Various methods of chemical analysis are suitable for determining H_2O_2 in solution, in which use is made of the oxidizing as well as reducing properties of H_2O_2 including titration with potassium permanganate, the determination with

OZONE DOSAGE CASCADE CONTROL BASED ON OFF GAS OZONE LEVELS

FIGURE A-22
(SOURCE 21)

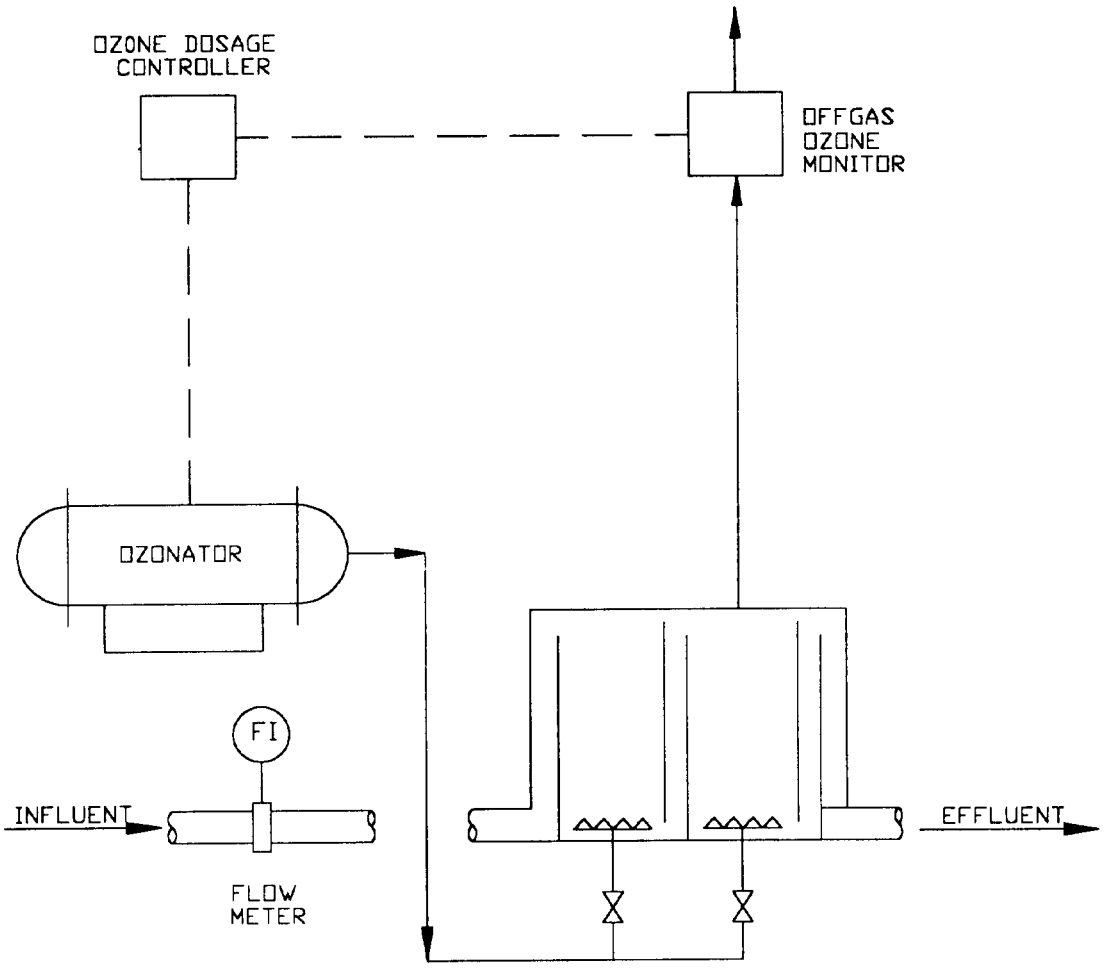

potassium iodide/thiosulfate, titration with cerium (IV) sulfate and photometric determination with titanium reagent.

5.3 UV CONTROL

UV light can be controlled by intensity, individual lamp monitoring and module run-time monitoring.

5.3.1 UV Intensity Control

Ultraviolet intensity is a measure of the amount of UV light available for treatment. Since this intensity is gradually attenuated, monitoring the UV intensity on a continual basis is important.

It is possible to manipulate the UV lamp intensity, and UV light according to AOP manufacturers. The **perox-pure**™ systems (Vulcan Peroxidation Systems) control UV lamp intensity by either changing the effective capacitance in the system or more simply by turning on or off a lamp. Monitoring and recording the system capacitance are, therefore, a part of monthly service.

The Rayox® systems (Solarchem Environmental Systems) control the current to each lamp using control signals from the system Programmable Logic Controller (PLC). The actual current and voltage are fed back to the PLC and the power is computed. This enables the system to control the power of the lamp and hence intensity to any value between 10 and 30 kW[17]. In the Ultrox® system, UV intensity is not manipulated. UV light, however, is manipulated. Individual lamps as well as banks of lamps can be turned on or off to vary UV dosage at a given retention time in the system[19].

There are several ways to control UV intensity: by sensor or by UV light intensity. A UV sensor is used to detect UV intensity passing through water to a point most distant on the chamber wall. Since the UV intensity decreases proportionally to the lamp life, quartz jacket fouling, and water quality (turbidity), the indicated value ($\mu w/cm^2$) will be the combination of all three factors. The output of the intensity measurement will be displayed on a control panel in the control room or next to the UV unit. UV intensity is measured by actinometry devices.

5.3.2 Individual Lamp Monitoring

The UV system should be equipped with special electronic circuitry that can monitor the operation of all lamps in the system. The status of each lamp should be visually displayed on a control panel. Should any lamp(s) fail to properly operate, the monitoring circuit must provide immediate reference and identification of specific lamp(s) requiring service.

5.3.3 Module Run-Time Monitoring

A UV lamp*s lifetime depends on the type and the manufacture. A typical low-pressure mercury-vapor lamp has a lifetime of about 7,000 to 10,000 hours. High-pressure mercury-vapor lamps have shorter lives about 3,000 to 4,000 hours. It is necessary to measure and record the period of time the lamps have been operating in the “on” condition. So each bank, or array of lamps in the system should be equipped with a non-resettable elapsed time meter (to 99,999 hours)

The output for the meter should be displayed on a control panel. Color lights which are linked to the meter output via a PLC should serve as visual indicators.

5.4 OZONE GENERATOR CONTROL

Ozone generator will include the controls described in the following subsections.

5.4.1 Air Drying System Control

Ambient air contains moisture. If moist air is used for feed gas to the ozonator, the moisture will react with ozone, reduce the yield of ozone and form nitric acid, which can result in severe corrosion problem. For this reason, air to be fed to the ozone generator should be adequately dried. Air should be dried to a dew point of at least minus 40°C and preferably to minus 60°C or below.

Dew point is a measure of the absolute moisture content of the air and is commonly used to denote the temperature at which moisture will begin to condense from a flow of gas. The dew point measurement is used to ensure that the prepared gas dew point does not exceed the specified level. Electronic equipment to sound alarms, initiate system shutdown, and provide a signal

for record keeping purposes should be included for all ozone systems.

Dew point measurement should also be used to control the desiccant dryer regeneration. Regeneration of the tower would be initiated by the gas dew point reaching a predetermined level. Each desiccator must be monitor continuously at the outlet so that any abnormal increase in the dew point can be detected as quickly as possible. Capacitive hygrometer with the sensor is usually used to measure the dew point.

5.4.2 Ozonator Controls

The ozonator should be protect from:

- Accidental increase in dew point, and
- Accidental air failure or water cooling failure.

To protect the ozonators from accidental increase in the dew point, it is recommended that a valve be installed at the outlet of the ozonator that closes every time the ozonator stops. This feature will prevent moist air blackflow from the reactor.

In case of air lack or of water cooling failure, the ozonator must be stopped immediately, so that the tube will not be damaged by over heating. Flow failure detectors which automatically switch-off the electrical power feed line to the ozonator must be installed.

5.4.3 Gas Flow Control

Measurement of gas flow throughout the system is important for controlling and monitoring purposes. The following gas flows should be measured:

- Ambient air in air preparation;
- High-purity oxygen flow, if oxygen is used for process gas;
- Dry-ozonized air flow; and
- Wet-ozonized air flow.

Selection of types of meters depends on the application and the gas being measured.

5.4.4 Common Control Elements

Common control elements in an AOP include sensors, meters, and controllers, control valves and control panels. These control elements are discussed below.

5.4.4.1 Sensors, Meters

Sensors:

- Temperature sensors,
- Level sensors, and
- pH sensors;

Meters:

- Water meters,
- Hydrogen peroxide meter,
- pH meter,
- Processed air flow meters for:
- High-purity oxygen,
- Dry-ozonized air, and
- Wet-ozonized air;

Controllers and analyzers:

- pH controller,
- ORP controller for redox reaction, if applicable, and
- Ozone residual analyzer.

5.4.4.2 Control Valves

Control valve include:

- Three-way control valves for flow diversion;
- Pressure control valves for normal venting of trapped peroxide;
- Pressure relief valves to insure a set pressure is not exceeded; and
- Automatic shut off valves.

5.4.4.3 Control Panel

A control panel is required on all AOP systems to monitor the entire treatment process. If the system is installed outdoors, an all-weather control panel should be provided. As standard features, the control panel should have the following, among other options:

- On/Off switch;
- Light status display;
- UV intensity meter (in some features)
- Running time meter (elapsed-time);
- Lamp-out indicator;
- Push-to-test button; and
- A 4-20 mA output signal interface circuit in conjunction with the UV sensor for remote user monitoring.

A typical control panel is presented in Figure A-23.

For more advanced control system, the control panel may contain a Programmable Logic Controller (PLC) which can be used to control the entire system including feed pumps, reagent delivery systems and ancillary system such as sensors, switches and valves. PLC can also allow for features as remote diagnostic via a telephone modem and program customizing to accommodate changes in operation throughout the remediation cycle.

5.4.5 Alarm Conditions

A number of conditions potentially detrimental to plant personnel, the operating equipment, or the environment of the plant can exist. Good practice is to establish acceptable limits of specific parameters above or below which sensor measurements will generate a visual or audible alarm requiring action by operating personnel and/or initiating independent automatic action of the equipment, which, in certain situations, might include shutdown of the entire system.

The installation of alarms at locations listed in the sections below is advisable.

5.4.5.1 Gas Preparation

The gas preparation system should have alarms for:

- High differential pressure across gas filters;
- High temperature on gas desiccant dryer;
- High gas pressure on downstream of reducing valves; and
- High feed gas dew point upstream of ozone generators.

TYPICAL CONTROL PANEL — COURTESY OF SOLARCHEM

FIGURE A-23

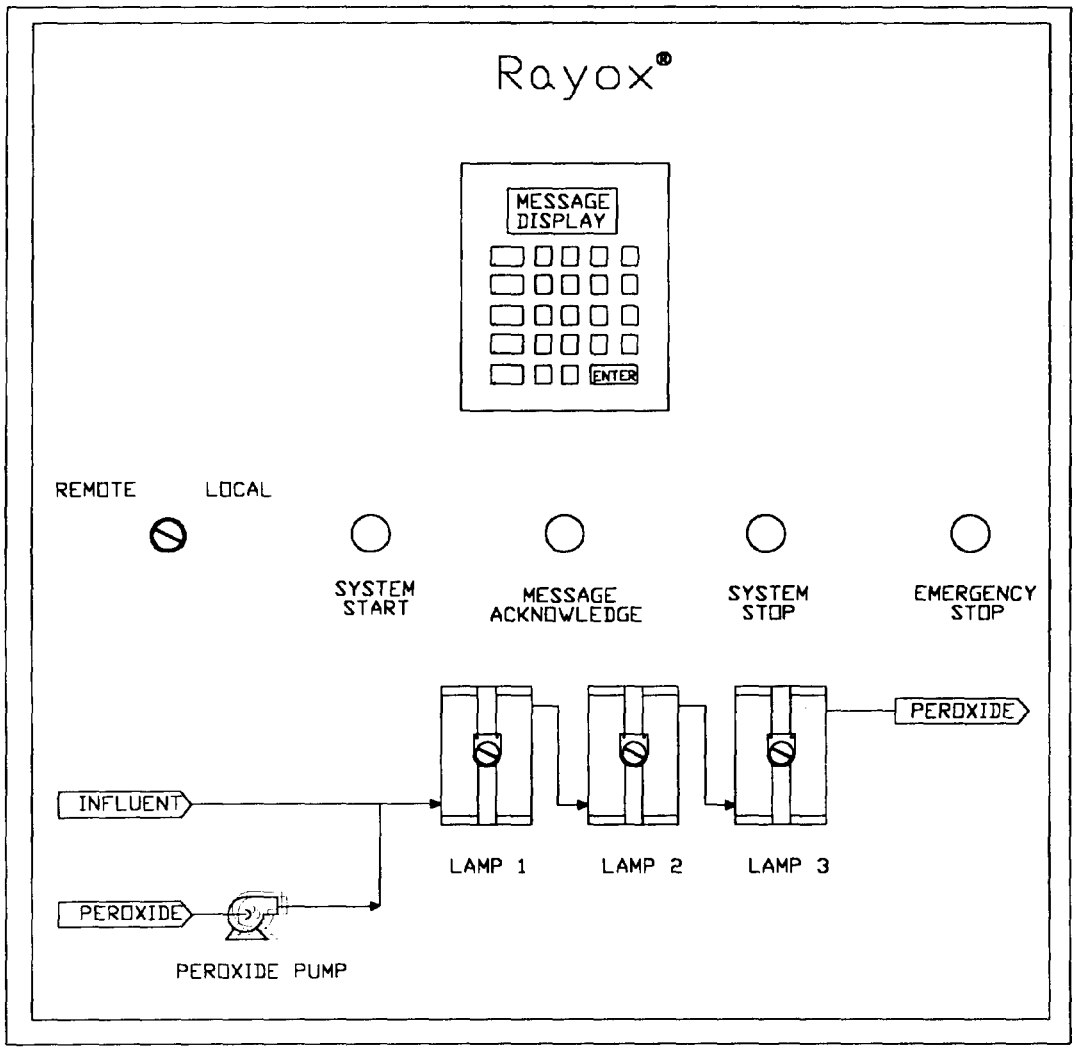

5.4.5.2 Ozone Generators

The ozone generator should have alarms to alert the operator for:

! Low cooling water flow,
! Low ozone concentration in ozonized gas to the reactor,
! High water temperature in cooling loop,
! High discharge water temperature from ozone generator, and
! High ozonized gas temperature from ozone generator.

5.4.5.3 Ozone Dissolution System

The ozone dissolution system should have alarms on for the following conditions:

! High-pressure in contactor head space (too high gas flow), and

! Low-pressure in contactor head space (too low gas flow).

5.4.5.4 UV Reactor

The UV reactor should have alarms to alert for:

! High temperature in UV reactor, and
! Low water flow to the UV reactor.

5.4.5.5 Effluent Line

If treated water is discharged to a water stream, the installation of a high temperature alarm is advisable.

5.4.5.6 Hydrogen Peroxide Feed System

The alarms should be installed on the hydrogen peroxide feed system to alert for:

! Low level in the peroxide storage tank;

! High temperature and pressure in the hydrogen peroxide tank; and

! Hydrogen peroxide feed pump stops.

5.4.5.7 Ozone Off-Gas Streams

Alarms are required to signal:

- High gas flow to destruction unit,
- Low temperature in ozone destruction unit,
- High level of ozone in exhaust gas from destruction unit, and
- High ozone levels in ozone generation system enclosed space.

5.4.6 Safety and Interlock System

Ground fault circuit interrupters (GFCI) must be installed to protect the equipment in the event of the entry of water. Safety interlocks should be installed inside the cover panel of the UV lamps. Mechanical interlocks and all the necessary electrical safety devices are also required on the main door of the power supply to the UV unit. Depending on the size and sophistication of the system, these interlocks can be linked to a PLC, which will be used to control the whole installation including feed pumps, the UV lamps and the reagent delivery system. The PLC can be accessed via a modem to facilitate diagnostics for easier servicing, and can be reprogrammed to accommodate changes in operation throughout the remediation cycle. For a simple installation, control interlocks can be accomplished using relays or contacts, and a PLC is not necessary.

Other design features include a shop-wired-and-tested control panel interlocks with personnel and process safety features to shut off power and display the cause at preset conditions.

6.0 LEGAL REQUIREMENTS

The design of a water treatment system using the UV/Oxidation process must conform to federal, state, and local laws and regulations. The applicable legal requirements will depend on the location and type of facility in which the treatment system is installed, the type of treatment system selected, and the wastes generated from the treatment process. The various regulatory issues to be considered will include, at a minimum, environmental regulations, health and safety regulations, and building codes.

Federal environmental regulations which are most applicable to the design of a water treatment system are authorized under several statutes described below.

6.1 CLEAN AIR ACT (CAA)

Clean Air Act including the CAA Amendments of 1990 provides the basis for regulating air pollution to the atmosphere. These regulations may apply to stationary sources such as a UV/Oxidation water treatment system where potential exists for organic emissions, ozone emissions, or other emissions of regulated pollutants. Different provisions of the CAA apply depending on where the source is located, which pollutants are being emitted and in what amounts. For new and modified stationary sources such as refineries, chemical plants, and manufacturing facilities, an application for a “permit to construct” must be granted by an air quality regulatory agency. In some states, the UV/Oxidation system may require a permit to operate as well.

6.2 CLEAN WATER ACT (CWA)

The CWA is the federal statute from which regulations are promulgated to protect the waters of the U.S. Specifically, these regulations cover wastewater discharges, stormwater runoff, and oil spill prevention. The operation of a UV/Oxidation water treatment system may be regulated under the CWA if the treated water is discharged off site to a ditch, stream, or other water body. Stormwater regulations may apply during the construction phase of a project in addition to the operational phase depending on the size and type of facility at which the treatment unit is

installed. For applicable facilities, a permit to discharge must be in place prior to the start of operations. Both permanent, temporary, and construction facilities may be regulated. The regulations cover direct discharges to surface water and discharges to Publicly-Owned Treatment Works (POTW).

6.3 EMERGENCY PLANNING AND COMMUNITY RIGHT-TO-KNOW ACT (EPCRA)

EPCRA establishes requirements for federal, state, and local governments and industry regarding emergency planning, emergency release notification, community right-to-know reporting, and toxic chemical release reporting and emissions inventory for hazardous and toxic chemicals. These regulations may apply to a UV/Oxidation system where certain chemicals are stored and used in the treatment process.

6.4 OCCUPATIONAL SAFETY AND HEALTH ACT (OSHA)

OSHA regulates worker health and safety in industry and during construction activities. Included in the OSHA regulations are requirements applicable to workers involved in certain hazardous waste operations such as Superfund cleanups: RCRA corrective actions; permitted Treatment, Storage, and Disposal (TSD) facilities; and emergency response operations involving the release of hazardous substances.

6.5 RESOURCE CONSERVATION AND RECOVERY ACT (RCRA)

RCRA includes the Hazardous and Solid Waste Amendments of (HSWA) 1984 primarily govern the management of solid wastes (both hazardous and non-hazardous wastes) and underground storage tanks used to store petroleum and toxic chemicals. Where UV/Oxidation is used to treat a RCRA hazardous waste, permitting requirements under 40 CFR 270 may potentially apply. The most important aspect of RCRA is its establishment of “cradle-to-grave” management and tracking of hazardous waste, from generator to transporter to treatment, storage, and disposal. If hazardous waste is generated from a treatment system, proper manifesting will be required for off site disposal in accordance with RCRA requirements.

The HSWA amendments established land disposal restrictions for hazardous waste and established minimum technology requirements for land disposal units. Use of a UV/Oxidation

system for RCRA corrective action may be governed by the RCRA regulations. Depending on application of the UV/Oxidation system (specifically Superfund and RCRA), the operations of the system may be required to have specific training in hazardous waste operations. If contaminated water to be treated is determined to be a hazardous waste (listed or characteristic), the RCRA requirements for storage and treatment under 40 CFR 264/265 may potentially apply. If the contaminated water is groundwater containing hazardous waste, then this water must also be managed as a hazardous waste until it no longer contains the hazardous waste.

In addition, where treatability testing is performed on hazardous waste, certain requirements must be met for sample collection and handling in accordance with 40 CFR 261.4(e) and (f) . Treatment of RCRA hazardous waste should also consider the requirements of the RCRA land disposal regulations (40 CFR 148 and 268) if land disposal will be used.

6.6 COMPREHENSIVE ENVIRONMENTAL RESPONSE. COMPENSATION AND LIABILITY ACT OR SUPERFUND (CERCLA)

CERCLA established a program to identify sites where hazardous substances have been, or might be, released into the environment; to ensure that these substances are cleaned up by responsible parties or the government; to evaluate damages to natural resources; and to create a claims procedure for parties who have cleaned up a site or spent money to restore natural resources. Under CERCLA action, on-site treatment facilities such as a UV/Oxidation system, are required to meet all substantive state and federal applicable or relevant and appropriate requirements (ARARs) but are exempt from permitting requirements.

6.7 SUPERFUND AMENDMENTS AND REAUTHORIZATION ACT (SARA)

SARA amended and expanded CERCLA with the addition of offsite disposal requirements, ARARs, and settlement requirements. These amendments also established requirements for the EPA to develop more stringent cleanup standards and established more public and state involvement in the Superfund process. These regulations may apply where UV/Oxidation is used at a Superfund Site.

6.8 SAFE DRINKING WATER ACT (SDWA)

The SDWA required EPA to regulate the quality of drinking water for the protection of human health. The EPA established several programs to address this issue including drinking water standards, underground injection control, and sole-source aquifer and wellhead protection programs. These regulations may apply to a water or wastewater treatment design if the cleanup or discharge standard must meet drinking water standards. In this case, primary (health-based) or secondary (aesthetic) drinking water standards may be used for design criteria.

6.9 TOXIC SUBSTANCES CONTROL ACT (TSCA)

TSCA regulates the testing, premanufacture notification, and record keeping of toxic substances. TSCA also includes storage requirements for PCBs. If a water or wastewater treatment system includes pretreatment storage of PCB-contaminated water, then the TSCA storage requirements may apply.

In addition, if radioactive wastes are to be treated, several directives issued by the EPA Office of Solid Waste and Emergency Response (OSWER), in conjunction with the Nuclear Regulatory Commission, may assist in the identification, treatment, and disposal of low-level radioactive, mixed wastes.

State regulations are generally similar to federal regulatory requirements, but vary among the states and should be identified and investigated on a site-specific basis. Some state agencies may be authorized by the federal government to administer and enforce certain federal regulatory programs. States and local government agencies may also adopt regulations and ordinances addressing building codes and safety features that must be incorporated into a system design. These regulations may address such issues as handrails and guards, first aid equipment, lighting, and ventilation. State and local regulatory requirements vary among the states and should be addressed during the design of a UV/Oxidation system.

7.0 TREATABILITY STUDIES

Various types of treatability testing can be performed including bench-scale, pilot-plant, and large-field demonstrations. The appropriateness of any of these techniques is dependent on the study objectives. Study objectives may vary from only determining whether toxic pollutants can be removed through chemical oxidation to providing engineering design information for full-scale operation. The reliability of results obtained is typically related to the size of the treatability test and the similarities with which the test set-up resembles a full-scale system. Bench-scale studies will generally identify whether the UV/Oxidation technology is applicable for the waste stream being evaluated. If the duration of the full scale remedial action is for a relatively short period of time, a bench-scale test should be adequate. If the technology will apply to a long-term remedial action (3 years or longer or is for treating a large flow rate, 250 gpm or more) a pilot-scale treatability study may be required.

Treatability testing can be performed by the owner/operator, third-party laboratories, or equipment suppliers. Even though equipment suppliers will usually limit their testing to their proprietary equipment, this type of testing can be beneficial to the owner/operator because it usually provides a closer simulation of actual commercially-available treatment equipment. In addition, a supplier may issue a performance warranty on their equipment for a full scale installation if they have performed the treatability testing. Guidelines for specifying a performance warranty in contract documents can be found in Chapter 13, Procurement. For an initial investigation to determine whether chemical oxidation is even a viable treatment option, the owner/operator may elect to perform the treatability testing using laboratory equipment to verify vendor claims and eliminate some AOP types.

Before any treatability testing is conducted, preparation of a good work plan is essential to ensure a successful and cost-effective study. The EPA provides guidance for performing treatability testing and for developing a work plan[62]. The plan should cover all aspects of the treatability study including:

- Project description and site background,
- Technology description,
- Study objectives,
- Required results,
- Schedule,
- Equipment requirements,
- Operating procedures,
- Sampling plan including QA/QC requirements,
- Analytical test procedures,
- Data management,
- Health and safety,
- Residuals management, and
- Reporting requirements.

The recommended contents of the final report are detailed in Section 7.4.

The first step to performing any treatability testing is to adequately characterize the wastewater to provide data for determining the appropriateness of chemical oxidation, to determine if pretreatment is required, and to aid in establishing the operating parameters for the treatability testing. The treatability testing can evaluate the effect of such process variables as:

- Pretreatment;
- Oxidant type and dosage (ozone and/or hydrogen peroxide);
- pH;
- Retention time;
- UV dose, kWh/1000 gal,
- Temperature, and
- Effectiveness of a catalyst.

The following sections describe the characterization work and treatability studies which should be implemented prior to finalizing a design of a UV/Oxidation system.

7.1 WASTEWATER CHARACTERIZATION

Before design work can be initiated on a UV/Oxidation system, the water or waste stream to be treated must be characterized to fully understand the nature and concentrations of the

contaminants present in the water. Knowing the type of contaminants present in the aqueous stream will aid in determining the type oxidant to use, the amount of UV light required, and the applicability of a catalyst in the UV/Oxidation treatment process. The concentration of contaminants can provide an indication as to the appropriateness and potential economics of a UV/Oxidation system.

In determining whether a water stream is amenable to chemical oxidation, characterization of the water should be performed to identify specific constituents present in the water. This data can aid in evaluating whether chemical oxidation will be effective for a specific waste stream, in addition to identifying those parameters which can affect the chemical oxidation process. For unknown sources, the following parameters should be analyzed as a minimum:

7.1.1 Inorganic Constituents

Inorganic constituents include:

! Iron,
! Manganese,
! Other metals which may be in a reduced form,
! Sulfides,
! Ammonia, and
! Cyanide;

7.1.2 Organic Constituents

Organic constituents include:

! Phenols,
! Volatile organic compounds,
! Semi-volatile organic compounds,
! Pesticides/Herbicides/PCBs, and
! Naturally-occurring humic substances, tannins, etc; and

7.1.3 Non-Specific Parameters

Non-specific parameters include:

! Chemical Oxygen Demand (COD),
! Total Organic Carbon (TOC),
! Oil and Grease,
! pH,
! Color,

! Turbidity,
! Hardness,
! Alkalinity,
! Total dissolved solids,
! Total suspended solids,
! Nitrate, nitrite, and
! UV absorbance to non specific parameters.

The COD test will provide a measure of the magnitude of the constituents in the water sample which are chemically reactive. The analyses for the specific organic parameters will identify the types of constituents contributing to the total chemical oxygen demand. The analyses for inorganic parameters will identify the pretreatment level requirements. The following classifications provide the relative reactivity of organic compounds to chemical oxidation:

7.1.3.1 <u>High Reactivity</u>
! phenols,
! benzene,
! aldehydes,
! aromatic amines,
! unsaturated halogenated hydrocarbons such as TCE, and
! certain sulfur compounds;

7.1.3.2 <u>Medium Reactivity</u>
! alcohols,
! alkyl-substituted aromatics,
! nitro-substituted aromatics,
! unsaturated alkyl groups,
! carbohydrates,
! aliphatic ketones,
! acids,
! esters, and
! amines.

7.1.3.3 Low Reactivity

- saturated halogenated hydrocarbons, such as TCA, chloroform, and
- saturated aliphatic compounds.

If the water sample is found to contain a large amount of iron or suspended solids, or is highly colored or turbid, pretreating the water to remove these constituents may be necessary prior to evaluating the oxidation process further. The presence of solids or other material which inhibit light transmission will affect the treatment efficiency. Hardness, alkalinity, and the dissolved solids concentration of a water will determine its potential to scale and coat the lamp tubes, thereby decreasing the UV light penetration. Alkalinity via scavenging has also been shown to reduce the rate of the hydroxyl radical attack on the organics, which will reduce the treatment efficiency. Table A-4 in Section 4.2 provides concentration limits at which pretreatment may be necessary or for which treatment efficiency may be adversely affected.

If the nature of the water and source of contamination is known then only those specific parameters which are known need be analyzed to quantify the constituents. If certain compounds are known not to be present in the water, then these could be eliminated from the suite of analyses to be performed.

In addition to identifying and quantifying the chemical constituents, characterization also should measure or estimate the flow rate or volume of water to be treated.

The sampling program which will be implemented to characterize the water stream should provide the guidance for obtaining a representative sample. Depending on the source of the water (groundwater, process wastewater, stormwater runoff, etc.), samples may be obtained as grab samples or composite samples. If the water to be treated has a constant concentration, then grab samples may be acceptable. In addition, if the water to be sampled does not flow continuously (e.g. intermittent discharge or batch tank dumps) grab samples may be necessary to determine the water characteristics. However, analyses for volatile organics must be performed on grab sample.

Most wastewater, though, will vary in magnitude and composition over a 24-hour period and obtaining composite samples is advisable to accurately represent an equalized water quality. Only grab samples should be taken for certain parameters such as volatile organic compounds, and oil and grease. Sufficient samples should be collected into the compositing container so that the results will be similar to the theoretical composition of a completely mixed tank which had collected all the flow from the stream being sampled. Composite sampling can be supplemented with grab samples to determine the variability of waste characteristics throughout the day, if desired.

All sample collection, preservation, and storage procedures should follow EPA-approved guidelines to ensure that wastewater characteristics are not altered prior to sample analyses.

7.2 BENCH-SCALE TREATABILITY STUDIES

Bench-scale testing is appropriate to provide a preliminary evaluation of the chemical oxidation treatment effectiveness. Bench-scale testing typically consists of batch reactors having volumes of 0.5 to 18.5 gallons (2 to 70 liters) . Recirculating flow or continuous-flow reactors can also be used. Drawbacks of a laboratory-scale, continuous-flow reactor are in the physical setup of the equipment, the ability to monitor and control very low liquid and gas flow rates, and shipping and handling large volumes of water. Parameters which can be evaluated on a relative basis in a bench-scale test typically include retention time, oxidant type and dosage, and pH.

Several configurations of a batch reactor can be used. One type of batch reactor has an inside diameter of 7.5 cm, a length of 30 cm and a total volume of 1.5 liters. An ultraviolet lamp is centrally located inside the reactor. Another example of a batch reactor consists of a shallow tray 36 inches long, 8 inches wide, and 7 inches deep with a reflector-backed light fixture containing a UV lamp mounted over it. The tray contains approximately 23 liters of water and is operated at a 5-inch water depth.

An example of a recirculating flow reactor is an annular reactor consisting of two quartz tubes with inner and outer

diameters of 2.5 centimeters and 5.4 centimeters. The inner tube contains the UV lamp, and the outer tube contains the aqueous solution being treated. The UV radiation from the inner lamp passes radially through the annular region containing the recirculating liquid. The reactor is operated in a recirculating mode by pumping the solution from a reservoir through the reactor and back to the reservoir.

A treatability study to evaluate ozone will require an ozone generator. For bench-scale set-ups, a tubular corona discharge type generator is normally used. The concentration of ozone generated by a corona discharge unit ranges from 1 to 3 percent by weight when supplied with air or 6 percent by weight or more when using oxygen as the feed gas. The application of ozone gas to the water requires a sparger and a mixing device to achieve complete contact of the ozone and the water.

The operation of a batch reactor generally follows these steps:

! Pretreat the water, if necessary, by coagulating and/or filtering the water to remove turbidity, solids, or floatable material;

! Adjust the pH of the water, if pH is to be a variable evaluated;

! Thoroughly mix the water to be treated with the desired dose of the oxidant solution using either ozone gas or hydrogen peroxide solution. A minimum solution concentration of 30 percent hydrogen peroxide should be used in the test procedures to prevent hydrogen peroxide degradation at lower concentration;

! Add the mixture to the reactor and irradiate the mixture with the selected UV lamp for a set period of time;

! Sample the water mixture before and after treatment and analyze the water for the constituents of concern;

! Repeat testing altering one variable at a time such as:

Oxidant dosage,
Retention time, or
UV lamp type and intensity.

Typically, a minimum of three different dosages or retention times are evaluated to define a range of treatment efficiencies. Hydrogen peroxide dosing should start in the range of 2 milligram (mg) of hydrogen peroxide per mg of oxygen demand. Retention times should be evaluated from as little as 30 seconds to several hours depending on the reactivity of the compounds present in the water. If the required effluent quality is still not achieved, then additional testing could be performed by altering the pH of the water or adding an iron catalyst in conjunction with hydrogen peroxide treatment. The results from this preliminary bench-scale testing will determine the basic treatment process which can be confirmed and refined during pilot-plant testing.

7.3 PILOT-SCALE TESTING

Pilot-scale studies are generally continuous-flow operations ranging from 1 to 25 gallons per minute (gpm) . Most testing can be conducted using flows in the range of 1 to 5 gpm. Pilot-scale testing is generally more useful than batch testing to evaluate a specific manufacturer*s equipment and process. Most manufactures have trailer-mounted, mobile equipment that can be easily transported to the site for on-site testing. This type of testing will enable an equipment supplier to provide a performance guarantee for a full-scale system at the time one is bid and purchased. By having an equipment supplier participate in the treatability test phase of a project, results to closer full-scale operation can be obtained.

Pilot-scale tests are usually performed to verify treatability results and to evaluate process equipment or when different technologies (e.g. UV/Oxidation and biological) are to be coupled together. More reliable treatability test results can be achieved with a pilot-plant because real-time treatment can be

conducted on the actual wastewater. This is advantageous where reactive or volatile compounds are present in the water to be tested in the treatability study. These compounds can easily degrade or be lost during transport of the test water to an off-site facility. Once the water is treated and samples are taken for analysis, appropriate chemical preservation can be done to accurately analyze the constituents of concern. The pilot-plant can be operated to evaluate the variations in constituent concentrations over time and can reflect the effect of seasonal variations if operated on a long-term basis. The larger size of a pilot-plant compared to a bench-scale reactor also provides better scale-up data to full size. Cost factors should be considered when determining whether bench-scale or pilot-scale testing should be performed.

Analytical testing required by the treatability study should be performed by a single laboratory to minimize differences between labs especially where multiple vendors are providing treatability testing. The laboratory performing the work must follow EPA protocols and be accepted through the USACE lab validation process.

If equipment for pilot-scale treatability testing is not obtained from an equipment manufacturer, a generic-type treatability test can be conducted. For UV/Ozonation, the most commonly used system is a continuous-flow, bubble-column reactor. This reactor is typically operated with ozone gas flow countercurrent to the liquid flow. Care must be taken to assure that the hydrodynamics of the process study reactor meet the actual full-scale designed system as closely as possible. Pilot columns of 10 to 20 feet are commonly used. The taller columns will tend to behave as plug-flow reactors where the shorter columns will operate more similarly to a completely mixed, stirred-tank reactor. Normally reactors are constructed of glass, clear acrylic, or clear polyvinyl chloride. Transparent columns can make determining whether they are operating properly easier. Column diameters are usually standard pipe sizes between 4 and 12 inches.

Other equipment required to conduct a generic-type pilot-scale treatability test includes:

! Pretreatment system (e.g. cartridge filters)

! Tanks and pumps to store and transfer water to the pilot unit;

! Ozone generator and ozone monitor; (if ozone is required);

! Chemical feed system consisting of chemical drum(s) , metering pumps, measuring devices for pH adjustment and/or hydrogen peroxide feed;

! Hydrogen peroxide monitor (if hydrogen peroxide is used);

! Containers for waste disposal;

! Sampling equipment and sample taps at the influent, effluent, and midpoints of the pilot-plant if multiple stages are used;

! Equipment for field measurements (pH meters, flow devices, temperature gauges, etc.)

! Health and safety equipment;

! On-site laboratory, (if necessary or cost effective); and

! Secondary containment of equipment, when treating hazardous waste.

Selection of a site to operate the pilot-plant should consider the following issues:

! Accessibility to the wastewater source,
! Utility requirements (water, power, telephone),
! Availability of an effluent discharge location,
! Permitting requirements,
! Truck access for deliveries,
! Shelter/office space for operators, and
! Security.

Special disposal requirements for waste streams generated

should be identified prior to commencing testing. Some unattended operation may be possible for extended studies with automated pilot-plants. Two operators are required during start up and during unusually active test periods, e.g. during wide swings in raw water quality. An observer representing the interest of the government also be required during start-up.

Process operating parameters can be varied during the test period to determine optimal performance. The parameters which can be varied are similar to those listed for the bench-scale testing and can include one or more of the following:

! hydrogen peroxide dosage rate (if used),
! ozone gas flow (if used)
! catalyst dosage rate, (if used)
! retention time,
! influent pH,
! influent flow rate,
! number of stages,
! UXT lamp wattage, and,
! pretreatment systems.

The ozone generator must be capable of supplying the maximum amount of ozone expected. An oversized generator may be difficult to control unless excess gas is generated and wasted. A turndown ratio of 10:1 is typical in a small generator system.

7.4 TREATABILITY TESTING DATA

When evaluating the effects of UV/Oxidation on treatment of aqueous streams, data from the entire process must be collected, recorded, and analyzed. Sampling data collected during treatability testing should relate to the following:

! Influent and effluent water samples,
! Air emissions monitoring, and
! Process control parameters.

If pretreatment occurs, water samples should be taken before and after the pretreatment stage of the pilot unit. Additional samples can be collected at midpoint through the reactor, if appropriate, based on the equipment supplier*s design. These

samples should be analyzed for the organic or inorganic constituents requiring treatment to meet a discharge or cleanup criteria. The effluent should be analyzed for residual ozone and/or hydrogen peroxide.

Where hydrogen peroxide is used as the oxidant, samples should be pretreated to destroy residual peroxide prior to preserving the samples using the EPA-approved guidelines. Residual hydrogen peroxide can cause background reactions to occur during the time between sample collection and analysis. The residual hydrogen peroxide can be destroyed by the addition of catalase, thio-sulfate, or sodium sulfite. Where sodium sulfite is added, the sample pH should be adjusted to 7.0 ± 1 and sodium sulfite should be added in a 1:1 molar ratio using either a 10 percent solution or pure solid. Once the peroxide is destroyed, appropriate EPA-approved sample preservation should be performed for the specific compounds of concern.

Operating conditions should be monitored and recorded during the test period to provide data for use in the final evaluation of performance and life cycle cost. The parameters to be monitored will include:

! Power consumption for reactor, ozonator, and auxiliary equipment;

! Flow rate;

! Retention time;

! Hydrogen peroxide feed concentration and dosage if applicable;

! Ozone flow rate, if applicable;

! pH;

! Acid consumption, if applicable;

! Caustic consumption, if applicable;

! Coagulant usage;

! Temperature of the effluent, cooling water for ozonator, and decomposer heater;

! Catalyst addition; and

! Other factors specific to the pilot reactor (i.e. cooling water, sludge generation from pretreatment, etc.).

Emissions monitoring should be performed in the following locations:

! Reactor off-gas vent; and
! Ozone destruction unit, if applicable.

In conducting any laboratory treatability or pilot-plant study with ozone, measuring both the ozone dosed and the amount of ozone remaining in the off-gases from the reactor is essential. The difference between the two values is the amount of ozone actually consumed in the process. Additional air monitoring should include the off-gas temperature and volatile organic compounds where they are present in the feed water.

Sampling should not be performed until steady-state operation is achieved. This can be estimated as three times the hydraulic retention time (HRT) within the reactor after the lamps are at full power. The frequency of sampling can vary depending on the length of the run but a minimum of three samples should be taken to ensure reproducibility.

Quality control samples should be taken to verify sample results and may include the following as outlined in the approved treatability plan recognizing the need to balance cost vs data quality:

! Split Samples - Samples that are collected as a single sample, homogenized, divided into two or more equal parts, and placed into separate containers. The sample must be split in the field prior to delivery to a laboratory. Ordinarily, split samples are analyzed by two different laboratories.

! Replicate (duplicate, triplicate, etc.) Samples - Multiple grab samples, collected separately that equally represent a medium at a given time and location. This is the required type of collocated sample for volatile organic analyses and most groundwater and surface water samples.

! Rinsate Blanks - Samples consisting of reagent water collected from a final rinse of sampling equipment after the decontamination procedure has been performed. The purpose of rinsate blanks is to determine whether the sampling equipment is causing cross contamination of samples.

! Trip blanks - Containers of organic-free reagent water that are kept with the field sample containers from the time they leave the laboratory until the time they are returned to the laboratory. The purpose of trip blanks is to determine whether samples are being contaminated during transit or sample collection. Trip blanks pertain only to volatile organic analyses; therefore, the containers must contain no headspace. Only one trip blank is needed for one day*s sampling and satisfies trip blank requirements for all matrices for that day if the volatile samples are shipped in the same cooler.

Refer to ER 1110-1-263 for additional details on how to develop an approved QA/QC sampling plan. Preprinted data sheets are helpful for recording field information. The data can be transferred to a computerized data base for easier data manipulation, data reduction or statistical analysis. For extended studies, it may be desirable to provide on-line monitoring and data collection and storage for specific parameters (e.g., feed-gas concentration, off-gas concentration, liquid and gas flow rates, temperatures, etc.).

The final report format for the pilot treatability testing may contain the following elements:

! Project Description;
! Actual waste stream characteristics;
! Expected waste stream characteristics expected;
! Pilot Treatment System Process Train and Setup;
! Test Objectives;

! Summary previous test results;
! Pretreatment Requirements;
! System Setup and Adjustment for:
  power,
  flow Rate,
  process Water,
  temperature,
  Chemical and Catalyst Addition,
  pH and Water Quality Parameters, and
  Influent/Effluent Chemical Concentrations;

! Deviate from the work plan;
! Equipment and Materials;
! Sampling and Analysis;
! Data Management;
! Data Analysis and Interpretation;
! Residuals Management;
! Life Cycle Cost Comparison;
! Scale-up Factors for each major component with Justification;
! Comparison of Bench and Pilot Results (if applicable);
! Study results; and
! Recommendations.

7.5 INDEPENDENT EVALUATION

When treatability testing is conducted by an equipment supplier or contract laboratory, independent evaluations may be performed to validate the analytical data and study results. To conduct an independent evaluation, it is essential that a treatability study work plan be prepared prior to implementing the test plan so that all parties are in agreement with the study protocols, procedures, and data to be generated from the testing.

The independent evaluation should include the following:

! Review of the study report for conformance to the work plan requirements;

! QA/QC data validation to confirm acceptable laboratory analyses;

- A third-party observer in the laboratory for bench-scale work or in the field for a pilot-plant study; and

- Comparison of results to those from existing installations, if available, which may have full-scale or pilot-plant systems treating similar water.

The third-party reviewer should be an unbiased, qualified individual familiar with laboratory procedures. UV/Oxidation processes, and treatability testing.

8.0 SIZING CRITERIA

8.1 SIZING PARAMETERS

Prior to the sizing of an UV/Oxidation treatment system, the treatability studies and/or on-site pilot-scale test should be conducted. The data from these tests will allow for development of specific design criteria for a full-scale UV/Oxidation treatment system. Equipment sizing should be based on Design Analysis Calculations presented in Appendix C. The following parameters should be considered in sizing equipment:

! Influent flow,
! Hydraulic Retention Time (HRT),
! Structure and concentration of contaminants,
! Effluent characteristics,
! Air emission,
! Size and project requirements,
! Sampling requirements, and
! Automation level.

These parameters are discussed below.

8.1.1 Influent Flow

The size and volume of the following equipment will depend on the flow:

! Equalization tank (EQ) with emission control, if required,
! Pretreatment system, when required,
! Oxidant addition,
! UV reactor configuration,
! Effluent tank, if required, and
! Pumping equipment and process piping.

Reactor tank and the effluent tank volume is also a function of influent flow rate and retention time, as already discussed in Section 4.6.1. The latter is site-specific and should be determined on a case-by-case basis.

8.1.2 Hydraulic Retention Time (HRT)

The hydraulic retention time (HRT) is the amount of contact time between the contaminants with the oxidants and the UV light in the reactor. HRT depends on the variations of the flow and

the concentration of the feed water. The longer the HRT, the larger the reactor volume. The HRT is a function of the flow rate into the reactor. Some AOP manufactures use catalysts to improve the reaction rate to reduce the HRT. High HRT would achieve a high removal rate of all contaminants, but would also require a large reactor, making it more costly.

8.1.3 Structure and Concentration of Contaminants

Structure and concentration of contaminant are discussed in previous Section 4.2.1, Influent Characteristics. This section discusses what design aspects an AOP process structure & concentration influences.

Information on the structure of a contaminant will be used for:

! The selection of an AOP treatment process,
! The choice of oxidizers (hydrogen peroxide and/or ozone)
! The off-gas treatment, if required, and
! The selection and dosage of catalysts, if used.

Information on the concentration of contaminants will be used for:

! Determining UV dose, and

! Sizing the oxidant feed system (e.g., ozonator and supporting equipment such as air compressor, cooling water)

8.1.4 Effluent Characteristics

The level of contaminant removal is determined by the effluent limitations set by the regulatory agency and is dependent upon discharge methods, i.e., stream, POTW etc.. or user choice in the event an AOP is used as a pretreatment step. The cost of treatment is a function of the level of treatment and may be several orders of magnitude higher when the level of treatment increases only one order (for example from 0.1 ppm to 0.01 ppm or from 0.01 ppm to 0.001 ppm) . The condition of the effluent will also dictate the design of the effluent disposal facilities such as pipeline layout and control.

8.1.5 Air Emission Control

Air emission control may include VOC*s destruction unit (for EQ*s vent and reactor off-gas) and an ozone destruction unit. Depending on the AOP process selected, an UV/Ozone treatment process may include off-gas treatment techniques such as catalytic oxidation to destroy VOCs and an ozone decomposer for ozone control. Ozone decomposers should be sized for the full capacity of the ozonator to account for system malfunctions. Current design practices include thermal ozone destruction or catalytic destruction systems. Thermal ozone destruction is discussed in Section 4.7.7.1 and 4.7.7.2.

8.1.6 Sampling Requirements

Sampling points must be provided for the influent and at the effluent lines; one sampling tap at each reactor effluent should be included if multiple reactors are used.

8.1.7 Automation Level

Process monitoring and control for an AOP are discussed in Chapter 5, UV/Oxidation Process Control and Instrumentation. Safe operation of ozonization facilities requires the ability to detect any abnormal phenomenon, and the ability to react quickly to avoid any equipment damage. Any UV/Oxidation treatment plant needs to be equipped with a minimum level of automation in order to adequately perform start-up and shutdown in addition to required alarms connected with the handling of ozone (if any) and high voltages.

9.0 CONSTRUCTION MATERIALS AND INSTALLATION

The designer should consider two cases when selecting construction materials for an Advanced Oxidation System.

- Retrofitting existing equipment, and
- New equipment and treatment facility.

9.1 RETROFITTING EXISTING EQUIPMENT

In an existing facility, careful consideration should be given to the compatibility of the materials with the wastewater, if the designer desires to use existing equipment such as piping systems or tank(s) for carrying or storing contaminated wastes. Tanks used to hold raw water brought into the plant for treatment be covered to prevent escape of VOC into the work-place atmosphere within the plant. In some cases, the RCRA requirements for spill containment may apply. No existing tank should be reused for storage of chemicals except for the same chemical as previously used.

9.2 NEW EQUIPMENT AND TREATMENT FACILITY

Design considerations regarding construction materials should be given to the following components:

9.2.1 Gas Preparation System

9.2.1.1 Air Feed Gas

The construction materials for air feed gas should include materials that would be used for conventional compression, drying, and conveyance for ambient air. The following construction materials may be used for air preparation system:

Upstream of desiccant dryer:

Carbon steel, cast iron, aluminum, conventional gasketing, and piping coupling techniques.

Downstream of the desiccant dryer:

High quality stainless steel stabilized with molybdenum (type 316 L) piping from the isolation valve immediately upstream of the ozone generator.

9.2.1.2 High-purity Oxygen Feed Gas

For high-purity oxygen piping in the feed gas system the following materials should be used:

Piping:

ASTM A-312 TP 304L for welded services
ASTM A-312 TP 304 when not welded.

Fittings & flanges:

Compatible with piping materials.

Gate Valves:

150-lb rating, bronze trim and virgin Teflon packing

Butterfly valve:

125-lb rating, wafer type, cast iron body, stainless steel or bronze seat, stainless steel stem, bronze bushing, and Buna "N" seat.

9.2.2 Ozone Generators

Ozone generators produce dry ozone gas which has a low dew point -60°C or -76°F. Material for surfaces in contact with dry ozonized gas should be selected for dry ozonized gas service. Stainless steel in the ACE series 316 and 321 are acceptable. Tungsten inert gas (TIG) welding procedures are to be used[21]. Gaskets should be Hypalon, silicon or Teflon® or other ozone and UV resistant materials.

9.2.3 Piping Systems for Ozonation Service

Design of piping systems for ozonation service must consider two cases:

! Dry-ozonized, and
! Wet-ozonized gas services.

9.2.3.1 Dry-ozonized Gas Service

! Piping systems for dry ozone service, which is that upstream of the reactor, should be a minimum stainless ACE 304 and 304L (316L being most common) with TIG welding and Teflon®-filled gaskets.

! Valves should be cast-iron body, Viton A body liner, 316 SS body, disc, and Viton A seat and seals or 316 SS body, disc, and shaft, with Tetrafluoroethylene (TEE) -filled seat and seal. Unplasticized polyvinylchloride (UPVC) or hard plastic piping systems should not be used[21].

9.2.3.2 Wet-ozonized Gas Service

! Wet-ozonized gas service, which is that downstream of reactor containing water vapor in the ozone off-gas, requires that all construction material be stainless steel 316 and 316L because it is the most rigorous service in the system.

! Other system components such as the demister and ozone destructor media cabinets should also be constructed of stainless steel 316 or 316L.

9.2.4 UV/Ozone Reaction Tank(s)

Reactor tank(s) for UV/Ozone should be treated as wet-ozonized service. All metal (for single or multistage systems) should be made of stainless steel 316 or 316L. UV lamps, vertically or horizontally positioned within the reactor, are enclosed within quartz tubes. A slight vacuum must be applied to the oxidation chamber to prevent ozone leakage.

9.2.5 Pumps

In general, pump design should comply with the USACE Specification CEGS 11211. Pumps to be used for ozonized water should be treated as wet-ozonized service.

9.2.6 Ozone Destruction System

The ozone destruction system from the demister through the ozone destructor unit should be treated as wet ozone service, which means all construction material should be stainless steel 316 or 316L.

9.2.6.1 Electrical Power Cable Protection

A rigid or flexible PVC or stainless steel shroud or covering should be provided to isolate the electrical cable from the ozonized liquid of the contactor.

9.2.6.2 NEMA Enclosures

NEMA enclosures should be made out of corrosion resistant materials. As a minimum, NEMA 4 enclosure is recommended.

9.2.7 Hydrogen Peroxide-Resistant Construction Materials

Hydrogen peroxide is usually supplied in aqueous solution. Industrial solutions range in strength from 30 percent to 70 percent. For specialized military and industrial application, hydrogen peroxide is used in limited quantities, ranging from 86 percent to 90 percent solution. Higher strengths from 99.5 percent to 100 percent have been produced for rocket propulsion.

Most applications for AOP, a 35% of hydrogen peroxide is commonly used.

To maintain low levels of decomposition, equipment for storing and handling hydrogen peroxide must be fabricated of suitable materials. The surface of most of these materials must be passivated (conditioned).

Passivation is a process in which a nitric acid solution is allowed to react with a metal surface causing that surface to form a metal oxide film. This film protects the hydrogen peroxide from being contaminated by the metal surface and protects the metal surface from being corroded by the hydrogen peroxide. Thus passivation ensures maximum peroxide stability and quality[50].

The following materials are suitable for hydrogen peroxide service:

! Chemical glassware,

! High-quality chemical stoneware,

! High-density polyethylene (HDPE),

! Polytetrafluoroethylene (PTFE),

! Aluminum alloys,

! Stainless steels (with 304 and 316 being most common)

! Rigid polyvinyl chloride, and

! Plasticized polyvinyl chlorides and synthetic elastomers can be used for temporary service[50].

9.2.7.1 Reaction Tank for UV/Hydrogen Peroxide

In most commercial systems, the reaction tank(s) for UV/Hydrogen Peroxide service are constructed of 316 stainless steel, ceramic fittings and high quality optic quartz sleeve which house the UV lamp(s) . In certain acidic streams, Teflon, hastalloy and zirconium have been selected as the material of choices.

9.2.7.2 Pumps

Hydrogen peroxide pumps must be constructed, internally and externally of hydrogen-peroxide-compatible materials. Pumps for hydrogen peroxide service are generally constructed of stainless steel. Stainless steel 304, 316, and preferably 304L and 316L, Teflon® (PTFE) are acceptable[50].

For mechanical seals, the following materials are acceptable:

Metallic Options:

Stainless steel 316, 316L, 304, 304L.

Nonmetallic options:

Teflon®, glass-filled Teflon®, Viton, Aluminum # 356, oxide ceramic, and chemical grade silicon carbide.

Gaskets, Diaphragms. 0-rings, Seals. Packing. and Lining:

! Virgin Teflon® (PTFE),
! Viton,
! PP363,
! Vinyl, and
! Gylon.

Note:

VITON is a registered trade mark of the Dupont Company
TEFLON® is a registered trade mark of the Dupont Company
HYPALON is a registered trade mark of the Dupont Company
KYNAR is a registered trade mark of the Pennwalt Company
FLUORIL is a registered trade mark of the 3M Company

9.2.7.3 Storage Tanks for Hydrogen Peroxide

Hydrogen peroxide has high vapor pressure (at 35%, 23.3 mmHg @ 30°C), therefore, it should not be stored in completely sealed containers. Hydrogen peroxide reacts violently with iron, thus, non-ferrous-containing materials should be used for hydrogen peroxide service. All hydrogen peroxide storage tanks must have a filtered vent sized for maximum pumping to or from the tank. The vent should include a dust filter with 50-micron pore size ceramic and stone. In addition to the vent, all storage tanks should have a free-floating manhole cover to relieve excess pressure produced by accelerated decomposition. A general rule for calculating the minimum area of the floating roof manway cover is 1 square inch for every 100 gallons of storage space, for a system carrying less than 52 percent by weight and 2 square inches for a system carrying greater than 52 percent by weight[50]. Storage of high strength hydrogen peroxide (50 percent) should be located outdoors. All applicable regulations should be checked before storage tanks are placed. Storage tanks should be placed in a diked area separated from other dikes. Dike area should have a volume equal to 110 percent of the total volume of the storage tank.

9.2.7.4 Transfer Systems for Hydrogen Peroxide Service

When a hydrogen peroxide transfer system is designed, appropriate materials must be used, and several other guidelines should also be followed:

! Hydrogen peroxide should never be confined to avoid gas build-up;

! Water must be located near the transfer system;

! Hydrogen peroxide piping should occupy the highest position in the pipe rack to avoid contamination from other systems;

! Drains should be located at all low points;

! Welding and flanges are preferred over threaded connections; and

! A flange bolt kit is recommended when joining dissimilar metals.

The materials listed below are unacceptable for hydrogen peroxide services.

! Brass,
! Copper,
! Nickel,
! Iron and mild steel,
! Bronze,
! Synthetic rubber, and
! Polypropylene.

The materials listed below are acceptable for hydrogen peroxide service[50]:

Piping:

! ASTM A312 Gr. TP 316 seamless or ASTM A-312 Gr. TP 316 Electric,

! Fusion-welded pipe, no filler material, and

! Cold-Work-Annealed and passivated, hydrostatically-tested and milled certified.

! 1″ - 4″ Schedule 10S (Welded construction only),

! ½″ - 1″ Schedule 40S (threaded),

! Teflon-lined carbon steel for low concentration electronic grade only.

Tubing:

! Metallic Options: stainless steel 316, 316L, 304, 304L, and

! Nonmetallic options: high density polyethylene for low pressure and temporary applications.

Hose:

! Corrugated stainless steel 316, 3l6L, 304, 304L, and

! Braided reinforced heavy wall PVC for low-pressure applications.

Valves:

! Ball valves are preferred for peroxide service; and

! Relief must be provided in the ball valve cavity by drilling a small hole in the upstream face of the ball to release the pressure build-up in the ball valve cavity.

Instruments:

! Stainless steel 316, 316L, 304, 304L,
! Teflon®, and
! Fluorolube-fill fluids.

Pipe sealants:

! Teflon® tape and fluorolube lubricant, and
! Locktite PST57.

All material should be passivated before it is put into service.

10.0 OPERATING CONDITIONS

The operating conditions developed for an AOP treatment system must address the following issues:

- Operation Safety,
- Operating concerns,
- System start-up,
- Training, and
- Operation & Maintenance Manual.

These issues are discussed in the following sections.

10.1 OPERATION SAFETY

Equipment should be designed so operators of UV/Oxidation treatment systems will not be subject to UV radiation when working in the proximity of the UV unit. Contractor and operator training and O&M manuals should alert operators that each lamp in the UV module is a powerful source of radiation. UV radiation can cause serious damage to unprotected skin and eyes, but is safe when proper precautions are taken. The best protection is to prevent exposure to radiation. The UV modules pose no health threat when submerged and in their support racks, but the modules must be turned off when removed from the racks. If it becomes necessary to work within an open source of UV radiation, gloves, protective clothing, and UV face shield should be worn. Safety glasses with plastic lenses, or goggles that do not cover the entire face are not adequate. No part of the body should be exposed to UV radiation. Looking into a burning UV lamp and or exposing oneself to a burning UV lamp can damage eyes and skin.

For the UV/Ozone treatment system, the potential for on-site personnel or community exposure to airborne contaminants (gaseous exposure) should be monitored. If a system malfunction occurs, alarms must sound and all components of the system must shut off automatically. Protective canister-type respirators must be kept available. Rubber masks can be used for ozone concentration up to 5 ppm (10 mg/m^3 NTP). Beyond that level, canister type respirator with supplied air cylinders must be used. Personnel must be trained and practice handling and wearing masks and respirators.

Hydrogen peroxide solution, which is a reactive substance, presents the greatest chemical hazard associated with the system. However, when handled appropriately, the potential for exposure to hydrogen peroxide by on-site personnel is low. Safe practices for handling of hydrogen peroxide are as follows:

! Wear safety goggles and gloves;

! Have eye baths available and safety showers;

! Store H_2O_2 in original container in a cool place;

! Have water hoses available for fire fighting;

! Keep area free of combustible materials;

! Use clean vessels and equipment made of compatible materials.

! Wash away any spillage immediately;

! Use only vessels or containers fitted with pressure relief devices;

! Prevent hydrogen peroxide contact with iron-containing material, and carbonaceous/organic material; and

! keep area free from storage of all fuels and lubricant.

10.2 OPERATING CONCERNS

An AOP facility should be operated by a trained operator in order to achieve desired removal efficiencies. The following parameters should be of concern to the AOP operator:

! Flow variations,
! Concentration variations,
! Equipment calibration,
! Maintenance requirements, and
! Training.

10.2.1 Flow Variations

High variations in influent flow will affect the removal efficiencies of the treatment process. If the flow is too high, the operator has the option of increasing oxidant(s) and UV dosage or diverting part of the flow to an equalization tank (if available) or cutting back in flow from the influent supply line.

If the flow is too low, the UV dosage should be reduced; otherwise, the reactor may become overheated creating an automatic stop of the operation or, in some cases, damaging the system. Systems that use low-pressure mercury UV lamps will not overheat the reactor.

10.2.2 Concentrations Variations

The operator may face unpredictable variations of contaminant levels. As flow varies, contaminant concentration variations will also affect the system performance. The operator must adjust the operating parameters accordingly if a consistent performance is to be expected.

At low concentrations, the demand for oxidant(s) and UV dosage will be reduced. This can be achieved by reducing oxidant(s) dosage and turning off one or more of UV lamps. Some AOP systems provide options to change the UV dosage by manipulating the UV intensity itself[17,18].

High concentrations will require a high dosage of oxidants and/or UV dosage. In this case, the operator should increase the oxidant(s) and UV dosage or to operate the system in recycle mode as discussed in Section 4.2.2.5.

If both flow and concentration vary sporadically, the operator would not have any choice other than using an equalization tank to equalize the feed.

10.2.3 Equipment Calibration

Calibration is an important part of every monitoring program. The instruments used for measurements are customarily correct to within a certain percentage of the “true” value. This accuracy is generally expressed by the instrument*s manufacturer as the “inherent error of the device.” Instrument calibration does not

lead to elimination of error; it does allow the equipment to provide representative numbers for the subject measurement to the best of the machinery*s ability. Operators must provide a correction for instruments “drift” over time. Calibrating temperature and flow-monitoring devices is more difficult than calibrating constituent parameter instruments and should be done as often as recommended by the manufacturer. Permanently installed equipment used for measurements of record should be calibrated according to manufacture recommendations and quality assurance program.

10.2.4 Maintenance Requirements

Maintenance is comprised of a series of activities carried out to ensure that equipment, systems and facilities are able to perform as intended and/or to provide consistent performance of the treatment equipment. Regular maintenance by trained personnel is essential for a successful treatment operation.

A brief summary of the maintenance requirements for the UV/Oxidation systems is presented below.

10.2.4.1 UV Lamp Assembly

Lamp depreciation is a natural phenomenon which occurs over a period of time typically between 4,000 and 10,000 hours for low-pressure UV lamps and from 3,000 to 4,000 hours for medium-pressure lamps cited by most manufacturers(28). During this period of time, the UV lamp gradually overexposes its quartz tube and restricts the UV emission. At the end of the lamp*s life, the UV emission could be reduced to approximately 70 percent of its original output. To ensure adequate treatment throughout the lamp*s life, all dosage calculations are made at this “end-of-life” output level. Once they reach this low level of UV intensity, the lamps must be replaced. Some vendors monitor UV emission directly, others use elapsed non-resettable timer.

UV intensity decreases with fouling and with aging of the UV lamp; therefore, UV lamps should be checked and the maintenance should be performed when it is due according to the O&M manual. Regular UV lamp assembly maintenance includes periodically cleaning the quartz tubes housing the UV lamps. Eventually, the lamps will require replacement. The frequency at which the

quartz tubes should be cleaned depends on the type of UV lamps and the concentration of dissolved metals solids present in the influent or precipitate formed during treatment. Suppliers should provide a replacement set of bulbs prior to the one year warranty expiration, preferably 30 days before the end of the warranty period.

Conditions and materials that interfere with AOP process include chemical and biological fouling that develop on the surfaces of the UV lamps quartz tubes reducing their efficiency. Therefore, keeping the transfer surface clean of scaling is paramount to AOP system performance. From time to time the quartz sleeves will require cleaning. This cleaning is accomplished by using a mild solution of citric acid or phosphoric acid[19], or through operation of mechanical cleaning devices such as automatic wipers equipped in some systems[17,18].

10.2.4.2 Ozone Unit

In the ozone unit, the following points should be checked:

! Air/water flow rate,
! Cooling water pumps,
! Temperatures,
! Air/water pressures,
! Process gas Dew points,
! Air filters (check/replace)
! Ozone production rates (lbs/kW),
! Oil pressure in compressors,
! Desiccant unit switch-overs,
! Electrical transformer cooling devices,
! Decomposer heater, and
! Valve operation.

The decomposer heater must be maintained in good working condition. Regular testing should be carried out by manually turning off the heater to check the alarm response.

Yearly conduct the following:

! Performance of the unit (percent ozone)
! Change parts where required, and

! Clean the ozone generator thoroughly.

The maintenance program and frequency of preventive maintenance will depend on the operating conditions at each installation. The supplier of the AOP system usually recommends the maintenance program based on the specific equipment they supply. For normal operating environments, the program includes:

! Daily inspections,
! Weekly maintenance,
! Monthly maintenance, and
! 3000-hour maintenance.

Instrument control devices such as sensors for temperature, pH, ORP and flow control elements for air and water to the ozonator should be maintained on a daily basis.

10.3 SYSTEM START-UP

System start-up procedures and sequences of operation will vary, depending upon the type of AOP used. For example, if the treatment system used is UV/Ozone, cooling water for the ozonator should be prepared first. The next step would be the activating air compressor and ozone decomposer before operating the ozonator. The UV lamps can be turned on as soon as the influent waters fill the reactor tank. However for specific types of equipment used, the manufacturer or equipment supplier*s start-up procedures should be followed and coordinated with the use of other equipment.

10.4 TRAINING

Operation of an AOP treatment system requires skilled personnel trained to operate the equipment and the actual process. Operators should have attended 40 hour initial and 8 hour refresher training as recommended in the 29 CFR 1910.120. standard.

Site specific training should include those items listed below and should also include training as required by 29 CFR 1926.1200 (Hazard Communications Standards) for the hazardous material store in the facility.

A start-up training program for operation responses should be provided by the supplier of the AOP system. Operator participation at the time the facility is commissioned enables the operator to acquire detailed and practical knowledge about operating the facility.

The operator must learn the system check-out procedures, performance testing, and various operating methods for each piece of equipment including manual, automatic, remote-controlled units and acquire the ability to solve the normal problems that occur during initial start-up.

The unit operator should also have completed an Occupational Safety and Health Act (OSHA) initial 40-hour health and safety training course and an annual 8-hour refresher course, if applicable, before operating the AOP system at a hazardous waste site. The operator should also participate in a medical monitoring program as specified under OSHA requirements.

Safety training should cover, among other things, the nature and danger of:

- UV radiation,
- Ozone,
- Hydrogen peroxide
- Other chemicals (for AOP operation and laboratory use)
- High voltage,
- High temperature surfaces,
- First aid in case of accidental ozone gas inhalation, and
- Precautions to be taken on premises where an exposure hazard exists.

These safety features are meaningful only if the operator strictly observes and follows all the rules and instructions provided in the Health and Safety Plan and in the O&M manual issued by the vendors.

The owner of the facility may have a contract option to carry out the operation and maintenance. In this case, training will be part of contractor responsibility.

10.5 OPERATION AND MAINTENANCE (O&M) MANUAL

The primary purpose of the Operation and Maintenance (O&M) Manual is to explain the functional operation of the treatment system, to describe its capabilities and limitations, and to outline procedures for control of the treatment processes.

The O&M Manual is necessary for a proper operation of the treatment system. The supplier is obligated to supply the equipment with O&M literature when the plant is commissioned.

The O&M Manual is intended for use by operating personnel and adapted to the particular features of the equipment installed; therefore, the document must be written for the operator. Only simple descriptive literature should be given, and any material or brochures that require a specialist or research should be excluded.

The manual should include:

! A general description of the treatment process;

! A detailed description of equipment, process flow and instrumentation;

! Certified drawings for equipment components and equipment layout;

! Practical operating procedures including performance testing, influent, effluent concentrations and trend analysis of influent;

! A complete description of control, instrument interface and maintenance procedures;

! Identify specialty items such as type of oil and grease, desiccants, etc.;

! Initial start-up procedures;

! Emergency shut down procedures,

! Monitoring and quality control;

! Equipment specifications;

! A list of faults and failures for each piece of equipment;

! Fault/failure analysis, and trouble shooting guide;

! List of spare parts;

! Process safety and protective equipment requirements, and

! Records keeping (electronic/others)

In order to plan all the inspection and maintenance operations required for plant operation, a maintenance schedule is essential. The maintenance schedule must include:

! Maintenance schedule,

! Systematic check-up operations for each piece of equipment;

! UV lamp replacement frequency;

! Sensor, and measurement devices calibration frequency;

! Periodic reports regarding energy consumption by ozone generators (if UV/Ozone is used) and other supporting units vital to production, ozone dissolution efficiency, ozone destruction efficiency; and consumption of chemicals such as hydrogen peroxide, acid, caustic and catalysts, if used;

! Recording data (electronic or others)

! The personnel who carries out the job;

! Personnel required for operation and maintenance;

- The time required for each job;

- Shut down requirements during maintenance/repair; and

- Mothballing and preservation procedures.

The entire schedule and the results of each job should be recorded. This provides for easy analysis when preparing the operating cost, O&M statistics, and figures to be included in operating cost determinations.

The following other items should be included:

- Cost of spare parts and suppliers;

- Plant utility requirements such as electrical, air, drinking water, service water and telephone;

- Safety around the UV/Oxidation treating unit, mercury spills, ozone leaks, and safety procedures for chemical handling; and

- Methods of disposal of old UV lamps and catalysts, if used;

- Name, address, and telephone number of technical personnel to contact in case of an emergency related to the treatment system.

Final acceptance of the plant should not be given until these documents have been supplied, received, and approved.

11.0 DESIGN AND CONSTRUCTION PACKAGE

The design and construction package for an AOP system normally include a design analysis, drawings, plans and specifications. This design and construction package can be used as a stand-alone package or integrated into an overall wastewater or water treatment design and construction package. The sections that follow provide a brief overview of the elements of the design analysis, drawings, and guide specifications. In addition to the information provided below, a description of general types of design calculations required is presented in Appendix B and a checklist of design documents and associated elements is presented in Appendix C.

This section describes the complete contents of the construction package. Depending on the procurement strategy selected, some or all of the actual deliverables may be prepared by the AOP system vendor.

11.1 DESIGN ANALYSIS

The design analysis serves as the document that justifies the design. The design analysis should be performed in accordance with the USACE Regulation ER 110-345-700, Engineering and Design-Design Analyses. For AOP applications, the design analyses should include, but not be limited to, the items detailed in the following two subsections:

11.1.1 Description of the Wastewater Characteristics

A tabular summary and/or description of the wastewater characteristics should include influent characteristics, and effluent characteristics. Influent characteristics are described in Section 7.1, Wastewater Characterization. Process parameters should be revised to prevent formation of undesirable intermediates.

The effluent characteristics normally include the desired performance requirements (i.e., effluent limitations) and a description of the methods used for disposal of waste streams.

11.1.2 Description of the AOP System

The tabular summary and description of the AOP should also include a description of the principal process, auxiliary systems and the supporting equipment used with the AOP. The process description should have a discussion on how the system works, and a discussion on how kinetics could be used to estimate further treatment.

The description should include the following:

! A list of all equipment supplied. The equipment list must include such details as descriptions of equipment, name tags assigned to each piece of equipment, manufacturer, size, dimension and model. The extent of the AOP supplier responsibility shall be specially indicated within the drawing and specification packages.

! A description of controls, instrumentation, and proposed operating sequence, addressing how the AOP equipment will be interfaced within the system, and with other related treatment processes that generate wastewater or groundwater; and

! All calculations necessary to support the design capacity, equipment sizing, chemical dosages, UV dosage, etc.

11.2 PROCESS HAZARD ANALYSIS

The design and construction package should include a process hazard analysis. The process hazard analysis may influence the system design in a manner to protect personnel safety. Process hazards are discussed in Section 4.1, Safety.

11.3 DRAWINGS AND DETAILS FOR BIDDING AND CONSTRUCTION

Design drawings should be provided for the complete treatment system including pretreatment. Equipment described in the specifications should have sufficient details to permit construction. The design drawings should coordinate with other disciplines and include provisions for interfacing with other treatment processes. In general, the drawings will include the following:

- A site plan showing the major components of the AOP system and their relationship to new or existing facilities;

- A flow schematic diagram(s) showing process flow, mass balance, oxidant feed systems, etc.;

- A piping and instrumentation diagram (P&ID) of the entire process;

- A building layout including a floor plan showing equipment layout and piping with tentative sizes;

- A cross-section through each building showing pertinent elevations and pipe locations;

- A complete equipment layout(s) that includes all major equipment components, auxiliary and supporting systems, and required piping, valves, meters, pumps, etc.;

- A diagram of utility routing and requirements;

- Coordination between structural, electrical, architectural and mechanical plans; and

- A Control Logic Diagram, including interface with other process equipment as well as specific process monitoring requirements.

11.4 PROCESS FLOW DIAGRAMS (PFD) AND MASS BALANCE

The process flow diagrams should show all interrelated process equipment and a mass balance. All process equipment should be labeled. The mass balance calculations should be performed on liquid, solids, and gaseous components with standard units. Both physical parameters (such as pH, temperature) and chemical components of each stream should also be shown on the mass balance. The calculations are based on design hydraulic flow rates, influent contaminant concentrations, unit process performance, overall removal efficiencies, and effluent level to determine the total mass flow rate of contaminants to be treated. The mass balance should also show intermediate products of the

contaminants if this information is deemed necessary to the operation.

11.5 ELECTRICAL

The electrical drawings for all processes in the treatment unit should include, as a minimum, the following items:

- One line diagram*;
- Load analysis
- Controls and interlocks;
- Wiring diagram;
- Power filter*; and
- Panel layout.

Note: * Electrical drawings are not within the AOP vendor package; however, interface points need to be identified.

11.6 SPECIFICATIONS

Specifications should be prepared to include both general and technical specifications for major equipment, auxiliary and supporting systems, accessories, special material, installation requirements, performance requirements, and any references to related specifications. Care should be taken to provide sufficient details as to specific construction components so that a quality product may be constructed.

12.0 1994 STATUS OF AOP TECHNOLOGY

The application of Advanced Oxidation technology to the treatment of contaminated wastewaters continues to develop rapidly. Both the vendors and system operators are gaining in experience and knowledge. These developments continue to make the technology more efficient and cost effective. In this rapidly changing field, new AOP manufacturers emerge while others fade away. The data and information regarding AOP systems and their process performance contained in this ETL are based on systems installed between 1988 and 1994. Performance of AOP systems may be expected to improve in the future due to advancement of the technology and process development. Currently, a number of vendors offer UV/Oxidation systems and related equipment. In the sections below is a short discussion of some of the active (1994) vendors/manufacturers specializing in equipment for the treatment of hazardous-waste-related aqueous streams and for water disinfection systems. Some of these processes and associated equipment are patented or contain patented or proprietary features. Also included are some manufacturers of oxidants, UV lamps and catalysts utilized in AOP systems. The inclusion here of certain vendors does not imply pre-approval of the vendors or their products. Similarly omission of a vendor does not imply that their products are disapproved. The authors tried to list all the vendors that could be identified in 1993-1994. Any information about the systems or products has been provided by the vendors and has not been independently verified. As stated above, this is a changing field and potential users of AOP systems should carefully evaluate the vendors in the marketplace when considering systems.

12.1 ACTIVE AOP VENDORS IN 1994

12.1.1 Vulcan/Peroxidation Systems. Inc.†

Peroxidation System Inc. developed a patented UV/Oxidation system called **perox-pure**™[18] in the late 1970*s to destroy dissolved organic contaminants in water. The process utilizes UV radiation, hydrogen peroxide and catalyst additives (if required) to oxidize organic compounds present in water in parts per million (ppm) levels or less. The catalyst, if used, is either destroyed or left in the effluent. The most common catalyst used is iron based at a concentration less than 10 mg/L. If iron at

this level will present a downstream problem, post-treatment for iron removal is necessary.

The **perox-pure™** system includes the following major components: a chemical oxidation unit, a hydrogen peroxide feed module, a UV lamp drive, and a control panel unit. The **perox-pure**™ Flow Diagram is presented in Figure A-24.

The **perox-pure™** system generates UV radiation by using medium-pressure mercury-vapor high intensity UV lamps housed in quartz sleeves. In the **perox-pure**™ technology, organic contaminants are oxidized by 0H' produced by UV radiation of hydrogen peroxide. Subsequently, the organic contaminants are broken down into carbon dioxide, water, halides and in some cases, organic acids.

The **perox-pure**™ system is equipped with a patented tube cleaner called Modular Self-cleaning Oxidation Chamber Patent #5,227,140 to clean both the surfaces of the quartz tubes and the inside of the oxidation chamber. The UV intensity supplied to the contaminated water is maximized with the effective use of the tube cleaners(18).

This fully commercialized technology was successfully demonstrated by the EPA SITE Program in 1992 on groundwater and wastewater contaminated with chlorinated solvents, pesticides, polychlorinated biphenyls (PCBs), phenolics, fuel hydrocarbons and other organic compounds[60].

12.1.2 Solarchem Environmental Systems †

Solarchem Environmental Systems was incorporated in 1984 under the laws of the Province of Ontario, Canada. It has developed several UV/Hydrogen peroxide processes, called Rayox® product line, covered by Rayox®-A U.S. Patent #5,266,214, Rayox®R U.S. Patent #5,258,124, Rayox®-F U.S. Patent #5,324,438 and UV/Ozone process U.S. Patent #5,043,079, all of which are directed at the destruction of waterborne organic contaminants(17).

The Rayox® performance is based on the use of photons from a

SCHEMATIC DIAGRAM OF PEROX-PURE ™
CHEMICAL OXIDATION SYSTEM
FIGURE A-24

(SOURCE 12)

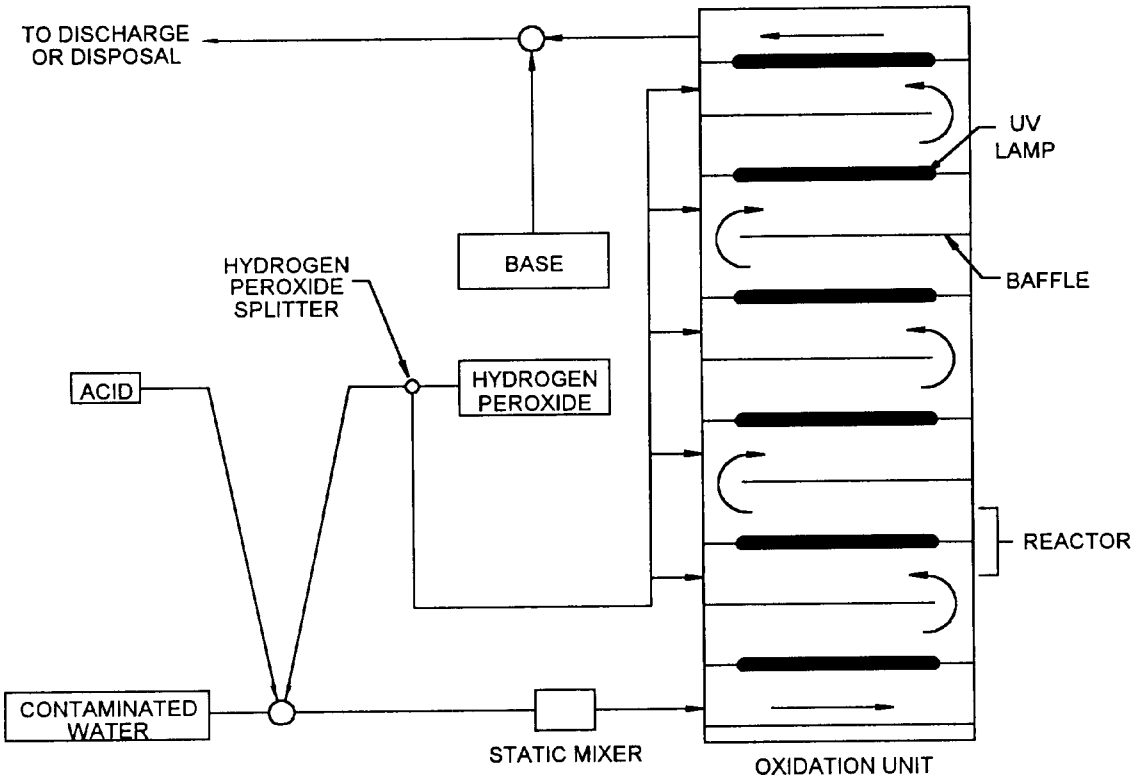

proprietary high-power lamp which emits UV radiation through a quartz sleeve into contaminated water. An oxidizing agent, hydrogen peroxide and, as necessary, a series of patented catalyst additives are added. These are activated by the TN light to form oxidizing species such as hydroxyl radicals. The attack by hydroxyl radicals, in the presence of oxygen, initiates a cascade of reactions, leading to mineralization (i.e., basic elements such as carbon dioxide, water, chlorides, sulfur, arsenic or whatever the contaminant may contain) and, in some cases, low molecular weight carboxylic acids.

A typical Solarchem Rayox® system is shown in Figure A-25. Reagents are injected and mixed using metering pumps and an in-line static mixer. The contaminated water then flows sequentially through one or more TN reactors where treatment occurs. In certain applications, catalysts, which are photo active are added to enhance the rate of reaction.

The proprietary catalysts used in this process are used in low concentrations and are not hazardous to the environment. The effluent from water treated with catalysts passes aquatic toxicity testing. It is possible to recycle catalysts but this is not usually done because of their low cost and non-toxic nature[17].

This technology treats groundwater and wastewater contaminated with fuel hydrocarbon (FHC), aromatic compounds (ETEX), gasoline additive (MTBE), chlorinated solvents, pesticide, PCB, phenolics, and other toxic compounds at concentrations ranging from milligrams per liter to micrograms per liter. The technology is fully commercialized at this time.

Solarchem also holds several patented steel-brush assemblies, Patent #5,133,945 and #5,266,280, that are driven over the surface of the quartz tube with a pneumatically controlled cylinder. The frequency of the cleaning action can be varied depending on the level of contamination in the water, and the Solarchem*s wiper may last up to 3 years in regular service before replacement is required[17].

Note: † denotes ETL's advisory board member

TYPICAL RAYOX® FLOW SCHEMATIC
SOLARCHEM ENVIRONMENTAL SYSTEM

FIGURE A-25

(SOURCE 17)

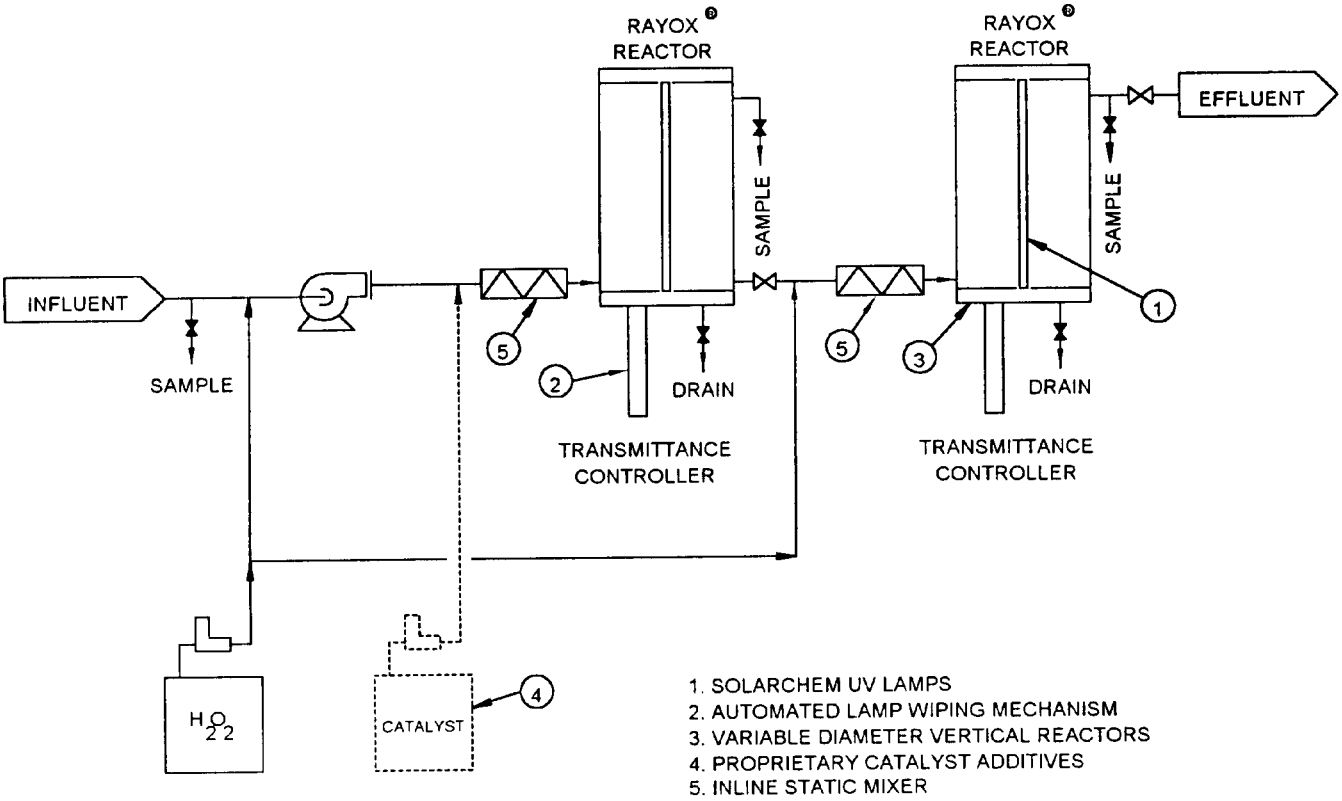

12.1.3 Ultrox International †

Ultrox International was formed in 1984 to develop and commercialize UV/Oxidation technology for wastewater treatment and drinking water improvement. Between 1988 and 1990, four U.S. Patents #4,941,957, #4,849,114, #4,792,407, and #4,780,287 were awarded to Ultrox for their use of UV light, ozone, and hydrogen peroxide to destroy organic contaminants in water. In the Ultrox® process, hydrogen peroxide is combined with contaminated water; ozone is generated and injected into the treatment tank and irradiated with UV light. The light reacts with ozone gas and hydrogen peroxide, producing hydroxyl radicals which destroy organic contaminants[11,19]. The Ultrox® process can be viewed as a photolytic ozonation process and the oxidation of contaminants is likely to occur either by direct reaction of the oxidants added or by reaction of the hydroxyl radicals with the contaminants. The Ultrox® system does not use a catalyst to enhance the rate of reaction in the process.

The UV lamps in the Ultrox system are low-intensity, low-pressure mercury vapor lamps with input wattage of approximately 70W per lamp and are mounted vertically in the reactor. The low heat generation and scrubbing action of the bubbler minimize lamp fouling potential. If lamp cleaning is required, a weak acid rinse is used in the tank. Lamps removal is not required. Ultrox® also offers UV/Ozone and UV/Hydrogen peroxide water treatment system.

The process also has been modified by General Electric (GE) Co., Fairfield, Conn. and Nuclear Energy Division (San Jose, Calif.) to remove organics from radioactive wastewater treatment system at boiling water nuclear plant(63).

Ultrox® has also developed a patented catalytic system called D-TOX, Patent No. 4,792,407 for the destruction of air-borne VOCs found in stripping off-gases, industrial off-gases, and soil venting vapors[19]

A field-scale demonstration was completed in 1989 and the report indicated that the Ultrox system removed the majority of

Note: † denotes ETL's advisory board member

VOCs through chemical oxidation. However, for a few VOCs, such as 1,1,1- trichloroethane (1,1,1-TCA), 1,1-dichloroethane (1,1-DCA) and Chloroform stripping also contributed to contaminant removal[11].

The Ultrox® treatment system consists of the following major components: UV/Oxidation reactor module, ozone generator module, hydrogen peroxide feed system, catalytic ozone decomposer (Decompozon) unit for treating reactor off-gas, and catalytic VOC destruction D-TOX unit.

The technology is fully commercial at this time. The Ultrox process is illustrated in Figure A-26.

12.1.4 Purus, Inc.†

Purus, Inc., uses photolytic oxidation to destroy VOCs in air streams. The system uses a pulsed-xenon-lamp (flashlamp) which emits short-wavelength UV light at very high intensities in the sub 250 nm region (< 250 nm)[60,64,65].

The difference between the Purus photolytic oxidation process and other UV/Oxidation processes is that the hydroxyl radicals are not formed. The low-wavelength UV emissions allow direct photolysis of many VOCs, particularly chlorinated compounds and freons. Direct photolysis occurs when the contaminants absorb light, transforming electrons to higher energy states and breaking molecular bonds. The innovative feature of this technology is its ability to shift the UV spectral output of a single lamp simply by changing the peak pulse power to optimize the photolysis.

The process uses vacuum extraction or air stripping to remove VOCs from soils or groundwater. The VOCs then enter the photolysis reactor, where a xenon flashlamp generates UV light. The plasma is produced by pulse discharge of electrical energy across two electrodes in the lamp.

Typical contaminant classes destroyed by the Purus system are VOCs including trichloroethene (TCE), dichloroethene (DCE),

Note: † denotes ETL's advisory board member

COURTESY OF ULTROX
ISOMETRIC VIEW OF THE ULTROX SYSTEM
FIGURE A-26

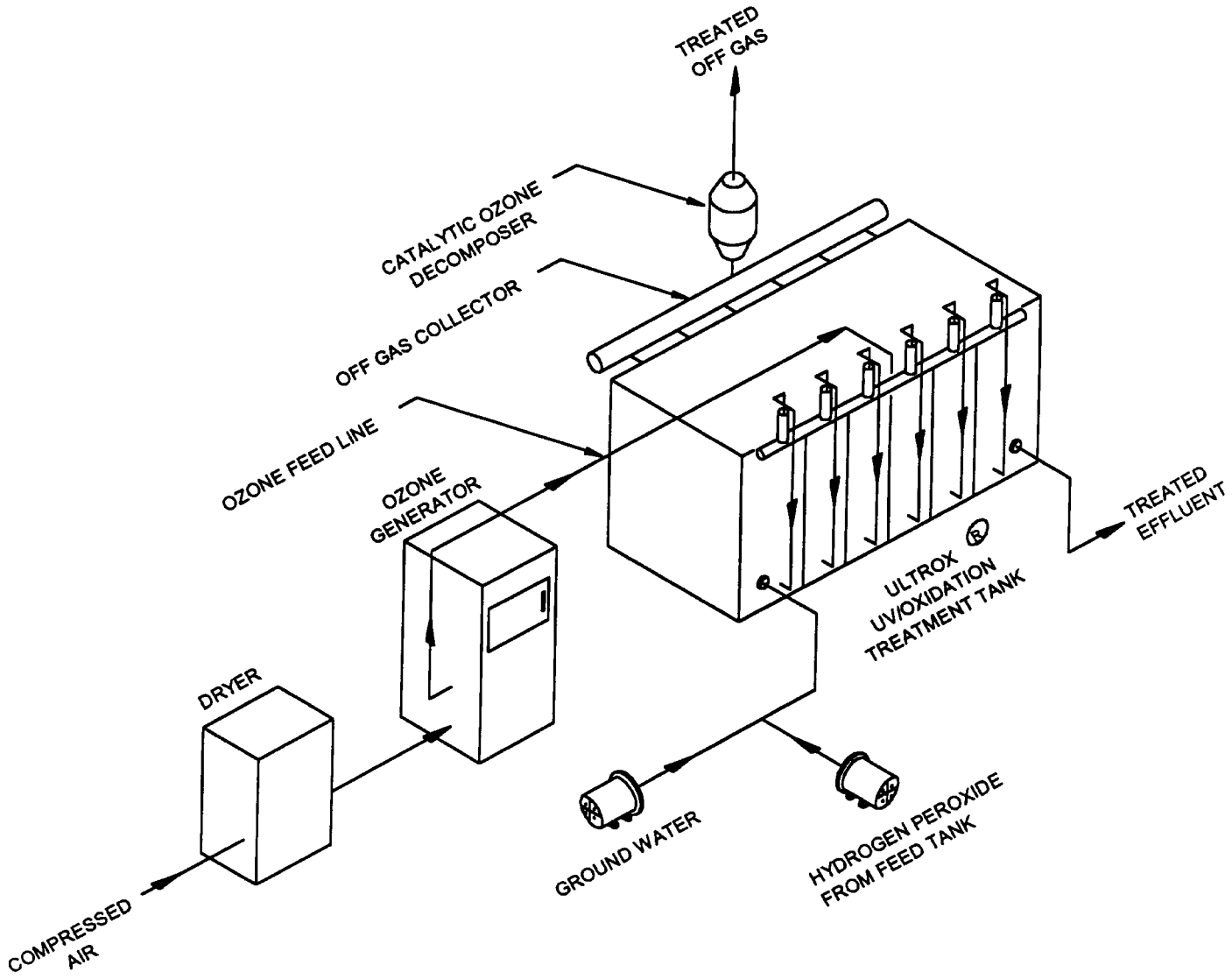

tetrachloroethene (PCE), and vinyl chloride volatiles from soil or groundwater. Destruction of other VOCs is currently under investigation[60].

The process was successfully demonstrated in the SITE Program in 1991, but not being developed to full commercialization.

The Purus UV/Oxidation process is presented in Figure A-27.

12.1.5 Magnum Water Technology+

The CAV-OX® UV/Oxidation process, developed by Magnum Water Technology, also uses hydroxyl radicals to oxidize organic contaminant in water. However, unlike most other UV/Oxidation processes, CAV-OX® uses, in addition to hydrogen peroxide, hydrodynamic cavitation to produce hydroxyl radicals from incoming wastewater. According to Magnum Technology, this feature reduces the quantity of hydrogen peroxide required in the process.

In the CAV-OX® process, wastewater is pumped to the cavitation chamber, which is designed to cause pressure variations in the flowing liquid. The pressure transient causes gas bubbles to suddenly develop, grow, and then collapse. When the micro bubble collapse occurs, instantaneous temperatures up to 5000 degrees K and pressures over 1000 atmospheres are produced. These short duration high temperatures accompanying bubble collapse in water will cause momentary dissociation of many liquid molecules. Short lived entities such as hydroxyl radicals (0H˙) are intensely reactive. Luminescence has been observed (Journal of Physical Chemistry 1991, pp 95). The latter will oxidize any organic compound in the water. The low-pressure mercury-vapor UV lamps within the reactor will oxidize the remaining organic compounds and convert added hydrogen peroxide to hydroxyl radicals[14].

The CAV-OX® technology is covered by two U.S. Patents and one Patent Application: “Water Remediation and Purification Method and Apparatus”[66].

Note: † denotes ETL’s advisory board member

SCHEMATIC DIAGRAM OF THE PURUS ADVANCED UV FLASHLAMP REACTOR
FIGURE A-27
(SOURCE 13)

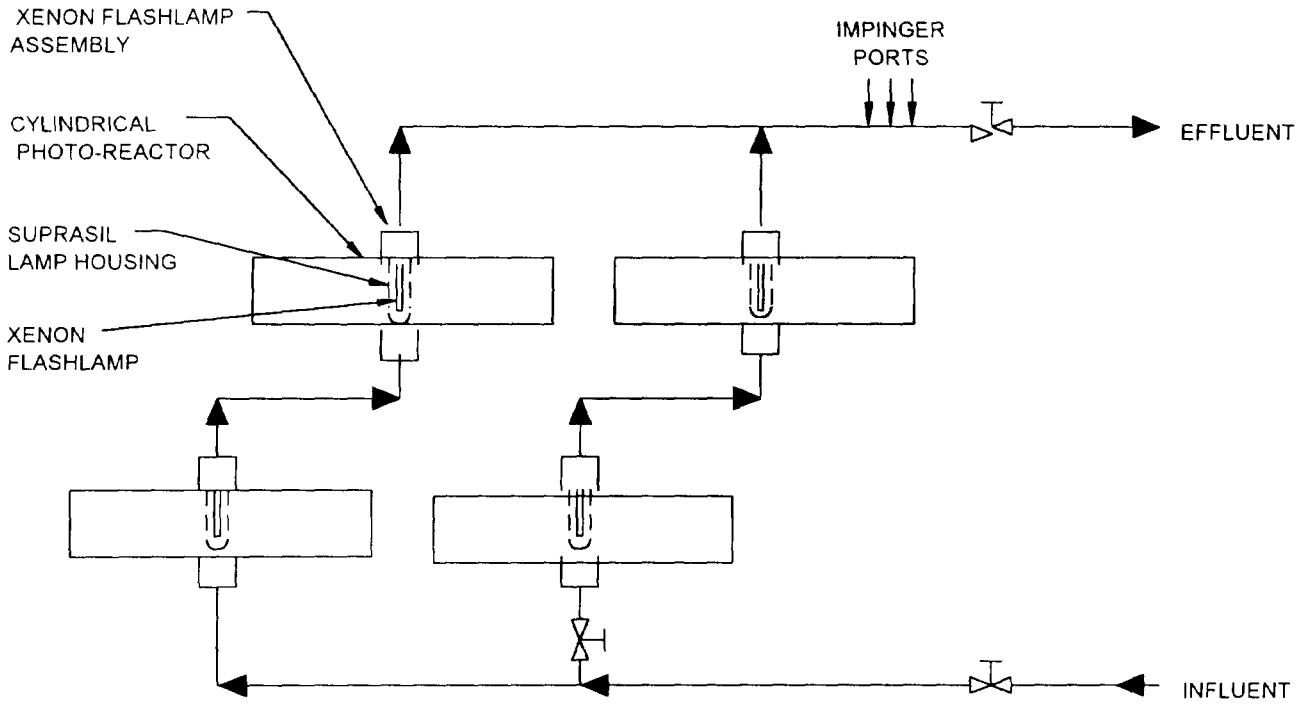

This technology applies to groundwater remediation, industrial waste effluent, cooling tower and high purity industrial water. Typical classes of contaminants destroyed by the CAV-OX® process include nonspecific organic compounds; the process is not applicable to inorganic compounds(14).

The CAV-OX® UV/oxidation process is fully commercialized at this time. The CAV-OX® process is shown Figure A-28.

12.1.6 Energy and Environmental Engineering, Inc.

Energy and Environmental Engineering, Inc. developed a process called “Laser Induced Photochemical Oxidative Destruction (LIPOD)” to photochemically oxidize organic compounds in wastewater using a chemical oxidant (hydrogen peroxide) and UV radiation from an Excimer laser. The beam energy is predominantly absorbed by the organic compounds and the oxidant. The process is envisioned as a final treatment step to reduce organic contamination in groundwater and industrial wastewaters to acceptable limits[60,68].

Laboratory-scale testing has shown that the LIPOD process is capable of destroying 90 percent or more of a variety of toxic organic compounds in dilute water solution. These include fuel hydrocarbon, BTEX, chlorinated solvents, pesticides, PCBs, and phenolic compounds at concentrations of 32 milligrams per liter at a rate of 1 gallon per minute. According to Energy and Environmental Engineering, by replacing the laser with specially designed UV lamps, flows can be increase to 100 gallons per minute[60].

A schematic of the LIPOD process is shown in Figure A-29.

12.1.7 Excalibur Enterprises. Inc.

Excalibur Enterprises, Inc. was formed in 1973 to focus on water purification. The company later expanded its service to hazardous waste treatment in 1983. The UV/Ozone/Ultrasoundsystem termed Soil Washing/Catalytic Ozone Oxidation unit is based on a primary patent #4,548,716 developed for water purification process. The process is developed to treat soils with organic

Note: † denotes ETL’s advisory board member

SCHEMATIC OF CAV-OX™ ADVANCED OXIDATION PROCESS
MAGNUM WATER TECHNOLOGY
FIGURE A-28
(SOURCE 14)

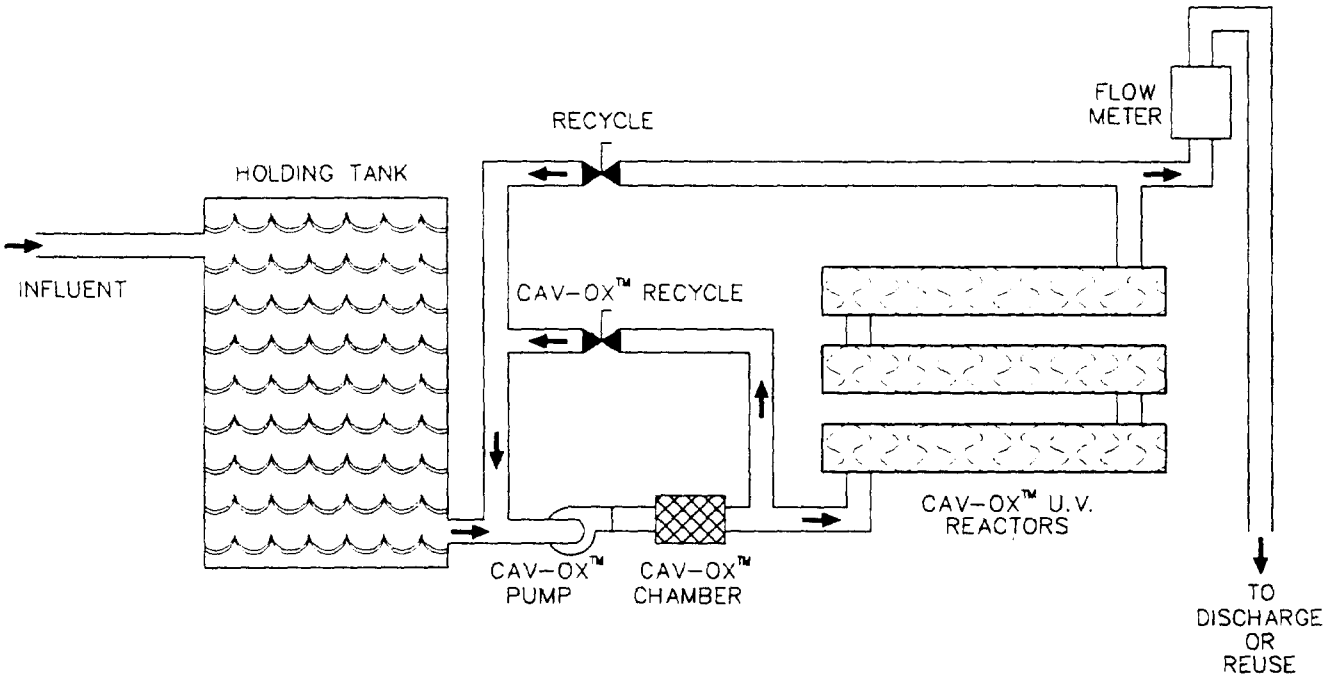

SCHEMATIC OF LASER INDUCED PHOTOCHEMICAL OXIDATIVE DESTRUCTION
ENERGY AND ENVIRONMENTAL ENGINEERING, INCORPORATED
FIGURE A-29
(SOURCE 67)

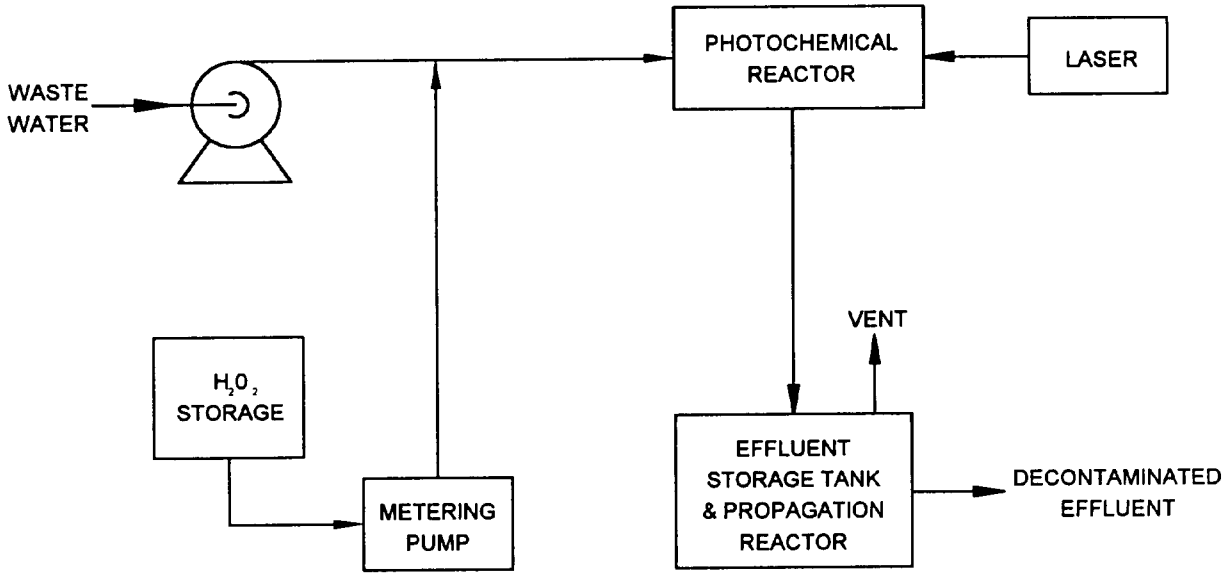

and inorganic contaminants. The technology is a two-stage process:

! The first stage extracts the contaminants from the soil, and

! The second stage oxidizes contaminants present in the extract.

Contaminated soil is passed through a 1-inch screen prior to being sent to the washer where ultra-pure water extracts the contaminants from the screened soil. Ultrasound acts as a catalyst to enhance soil washing. After solid/liquid separation, the water flows to a pretreatment unit to remove fine particles then to a carbon filter to reduce the contaminant load on the multi-chamber reactor. In the multi-chamber reactor, ozone gas, UV radiation, and ultrasound are applied to the contaminated water for the oxidation of contaminants. The treated water flows out of the reactor to a storage tank and is reused to wash another batch of soil. Off-gas from the reactor is sent to a carbon filter to remove residual organics[63].

Ultrasound or ultrasonic sound refers to acoustic frequencies between 20 and 120 KHz. The mechanical ultrasound action keeps the UV lamps system clean and increases ozone transfer to liquid. Ozone/air mixtures instead of air in the Soil Washing/Catalytic Ozone Oxidation unit show a notable improvement in the rates of reduction of COD and TOC in wastewaters.

Excalibur does not have any units installed in the field, but test conducted at EPA*s site indicated that this technology can be applied to soils, solids, sludges, leachates, and groundwater containing organics such as PCBs, pentachlorophenol (PCP), pesticides and herbicides, dioxins, and inorganics including cyanides at concentrations ranging from 1 ppm to 20,000 ppm(63).

The process was accepted in the SITE Demonstration Program in 1989, but is not developed to full commercialization. Figure A-30 illustrates a Soil washing/Catalytic Ozone Oxidation unit.

12.1.8 Sun River Innovations, Ltd †.

Sun River Innovations Ltd. developed a process that combines air stripping, ozone and UV light in one compact unit called

Note: † denotes ETL's advisory board member

SCHEMATIC OF OZONE/AIR SONOCATALYTIC TREATMENT UNIT
EXCALIBUR ENTERPRISES, INC.
FIGURE A-30
(SOURCE 63)

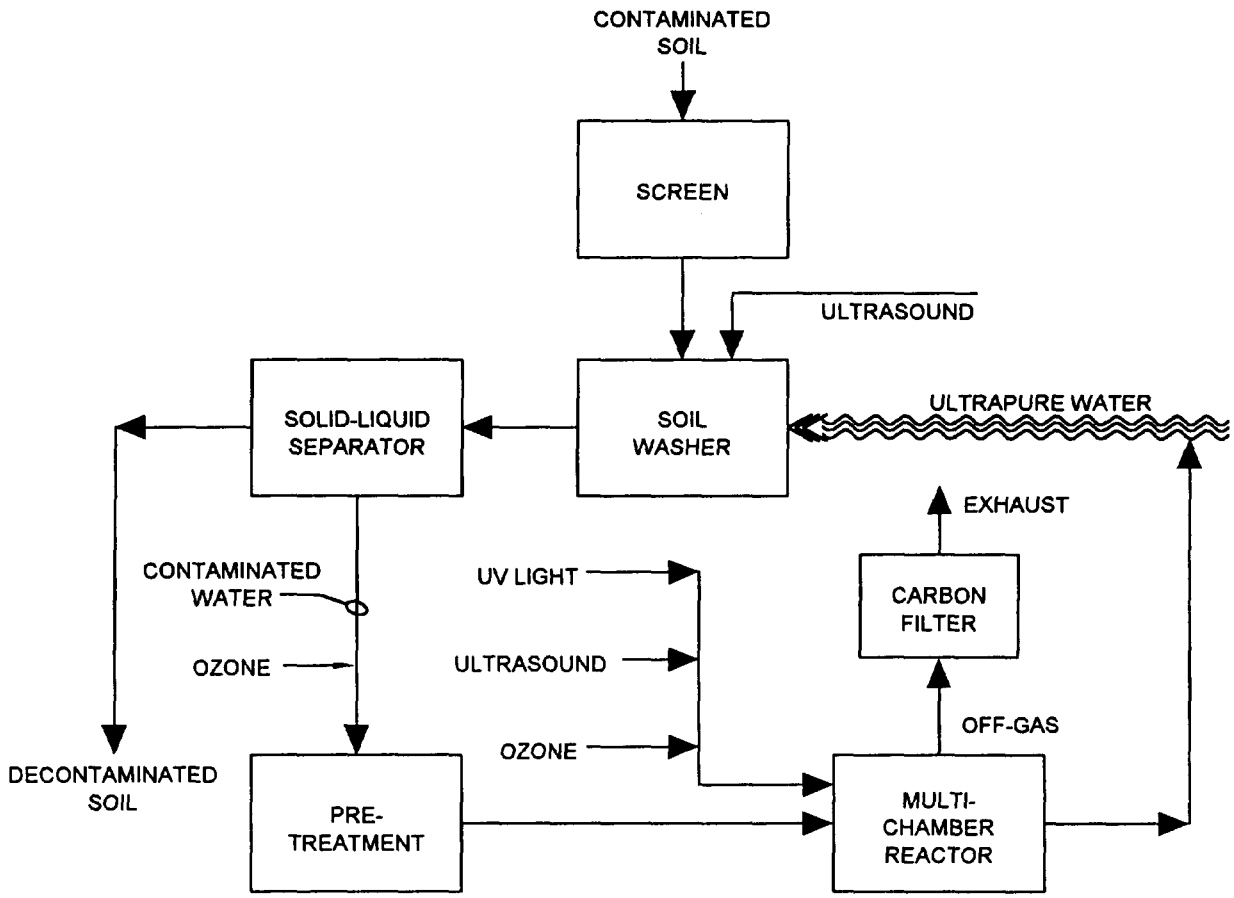

SR2000™ to destroy organic compounds in contaminated water. Oxidation of organic compounds is achieved through mixing and the addition of ozone into water stream and subsequent exposure of both to high-pressure high intensity UV lamp of specific wavelength[68]. The principle of operation is described as follows:

Step 1. Water to be purified enters the 5R2000, cascades through stripper media, mixes with ozone gas prior to entering the UV reaction chamber. It then either exits the system or recirculates for another pass.

Step 2. The air cools the UV reaction chamber, passes through the cascading water, strips contaminants and re-enters the UV chamber, allowing for air-phase destruct.

Step 3. The UV chamber*s elliptical shape refocuses the UV light directly into the transparent column of moving water.

Step 4. A computer with a hard disk, keyboard and monitor located inside the SR2000 operates the entire system and stores historical performance data for subsequent reference.

The technology is being developed to full commercialization at this time. Typical contaminant classes destroyed by SR2000™ are BTEX. A flow chart for the SR2000™ Advanced Oxidation process is presented in Figure A-31.

12.1.9 Solar Kinetics. Inc.†

The Solox of Solar Kinetics, Inc. offers two approaches to the remediation of contaminated water: the Solox-Solar (ST) and the Solox-Electric (SE) . Both Solox processes utilize photon energy to initiate the photo-chemical reactions for destruction of organic contaminants. The ST process receives photon energy from the UV of solar collectors. The SE process utilizes custom electric lamps to generate the required photon energy.

The process works by subjecting contaminated water to the combined forces of sunlight and a semiconductor catalyst, usually titanium dioxide (TiO_2). This catalyst may be mixed into the

Note: † denotes ETL's advisory board member

FLOW CHART FOR THE SR2000™ ADVANCED OXIDATION DEVICE

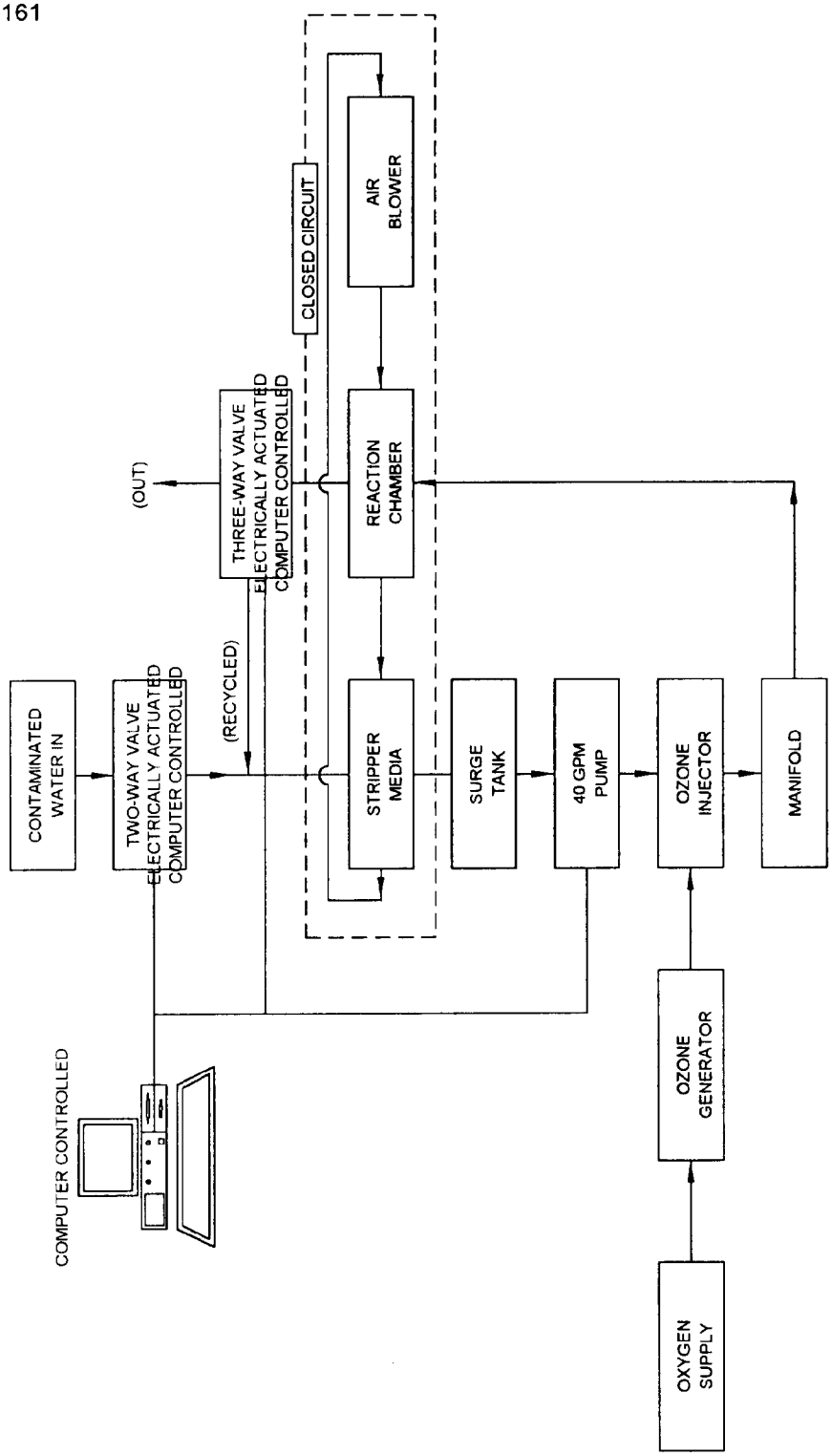

COURTESY OF
SUN RIVER INNOVATIONS

FIGURE A-31

water, creating a slurry or fixed onto a lattice-type structure through which the water flows. The solar detoxification process treats water at room temperatures. The titanium dioxide concentration required is in the range of 1,000 mg/L. Hydroxyl radicals are created by the photon energy that causes the organic materials to break down to carbon dioxide and water. The VOCs that escape the solution are sent through activated carbon filters and/or a special gas reactor that uses UV light to oxidize in the gas phase[69]. A schematic of the Solox advanced oxidation process is presented in Figure A-32.

Solar Kinetics technology can be applied to treat groundwater, industrial wastewater contaminated with BTEX, chlorinated solvents, cyanides, explosive waste, PAHs, phenols, pesticides and PCBs.

12.1.10 VM Technology

VM Technology develops a variety of environmental equipment and new technologies. The VM system, known as UVOX®, uses UV light, ozone and activated carbon. Two separate systems are offered: one for treating contaminated waters and the other for air-pollution control.

In the UVOX® system for groundwater treatment, ozone is generated by exposing compressed air between 80 and 100 60-watt UV lamps. Ozone is mixed with incoming water in the UVOX^{R} Aqua Reactor to remove contaminants. Unreacted ozone and other gases exit the top of the reactor, pass through a coalescer which separates water from air prior to its entering into the activated carbon beds. The system uses two alternating carbon beds. While one carbon bed is adsorbing VOCs, the other is regenerated with ozone. Recycled ozone is fed back into the Aqua Reactor, and treated air is vented to the atmosphere. Since the carbon is regenerated within the unit, the vendor claims the life of the carbon is affected only by the durability of the carbon itself. The carbon beds last between 5 and 10 years[70]. The VM technology process is presented in Figure A-33.

12.1.11 Matrix Photocatalytic Inc.

Matrix Photocatalytic Inc., has developed Photocatalytic Treatment Systems to remove organic contaminants in air and water

Note: † denotes ETL's advisory board member

COURTESY OF SOLOX
SCHEMATIC OF THE SOLOX ADVANCED OXIDATION PROCESS

FIGURE A-32

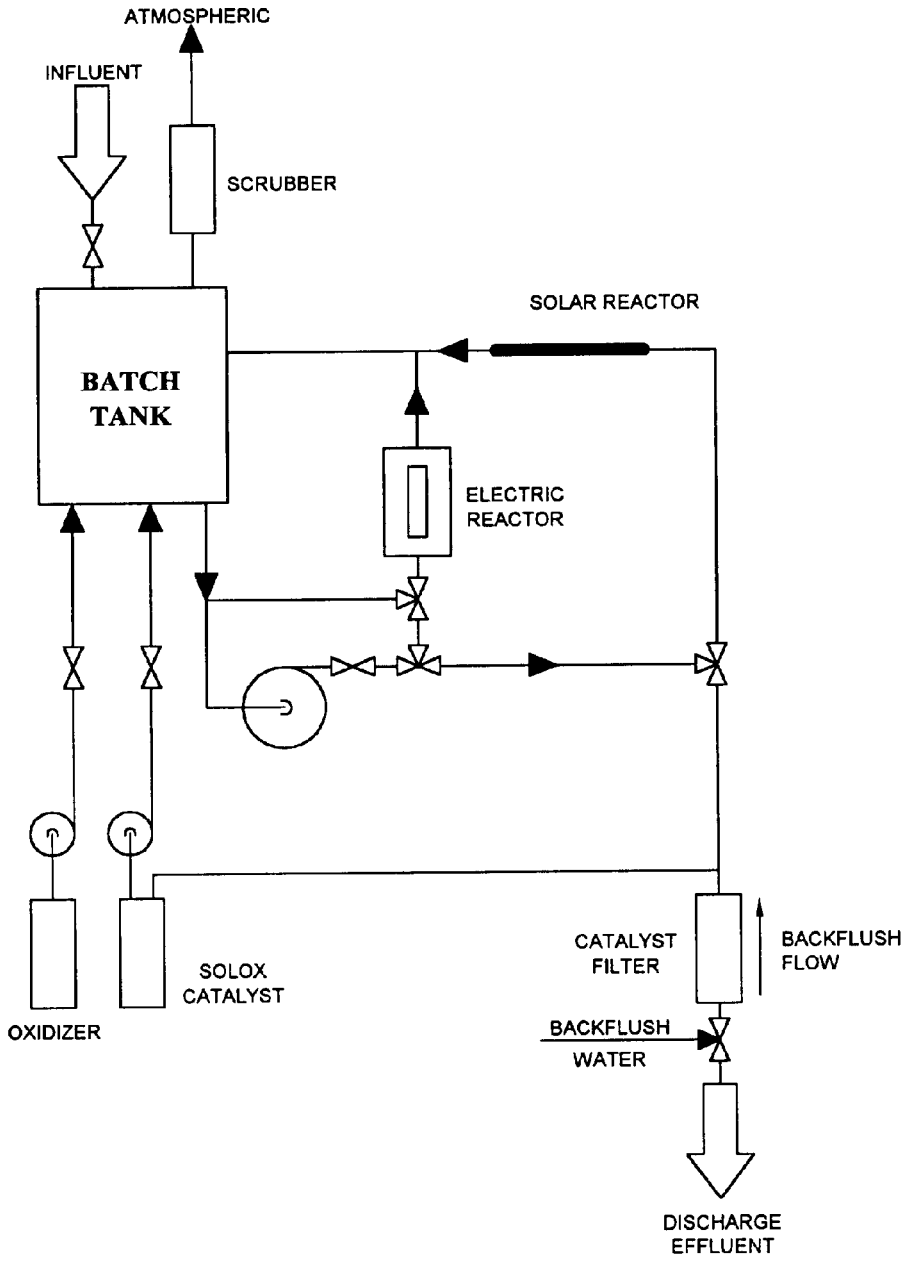

SCHEMATIC OF UVOX SYSTEM
FIGURE A-33
(SOURCE 70)

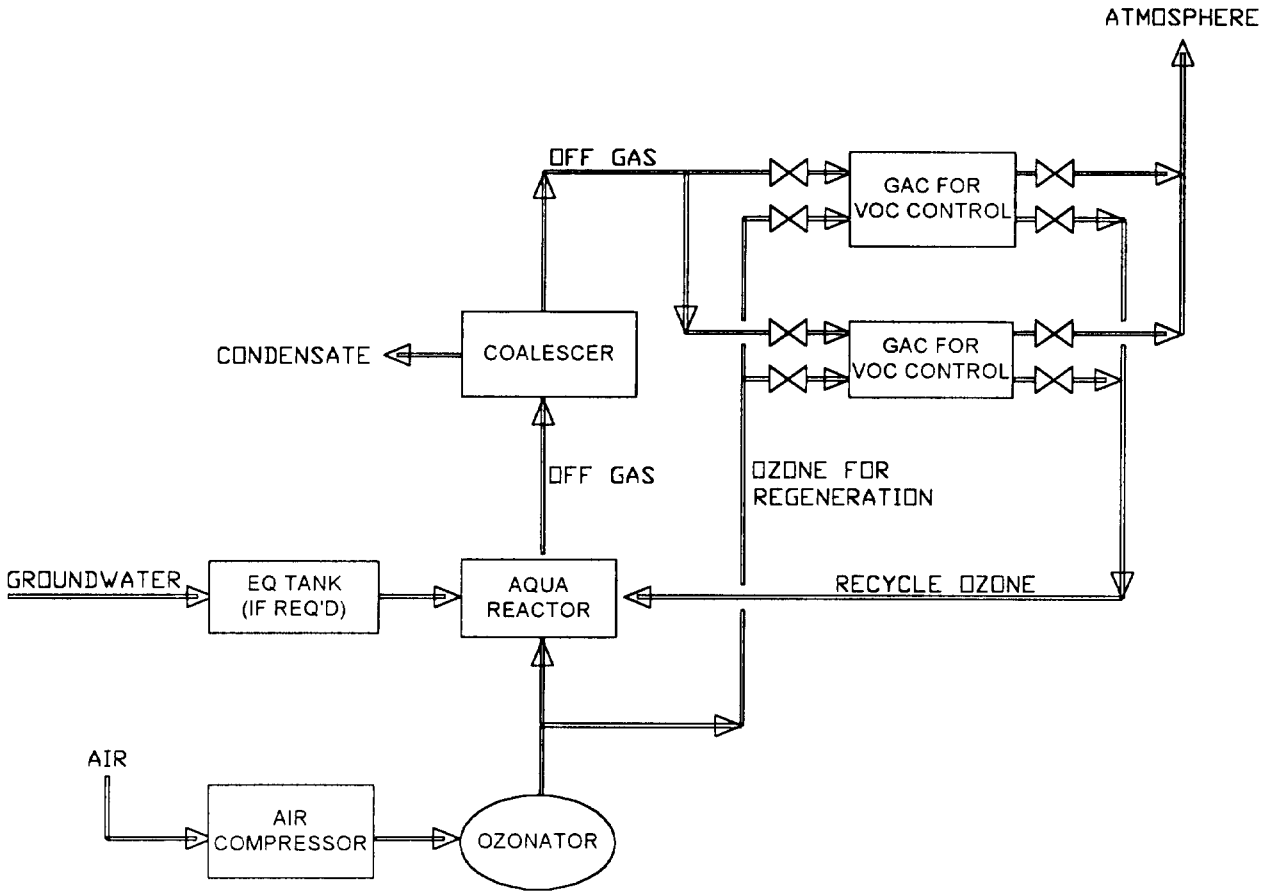

at ambient temperature, using an illuminated titanium dioxide (TiO_2) catalytic matrix. Basic components of this system are the photocatalytic reactor cells. The reactor cell is comprised of an outer stainless steel jacket which contains a photocatalytic matrix and a low-pressure UV lamp (< 400nm) for illumination. Around the lamp lies a multi-layered sleeve of special fiberglass mesh bonded with titanium dioxide to form the catalyst matrix. The titanium dioxide, when excited by light, generates excess electrons in the conduction band ($e-_{CB}$) and positive holes (h^+_{VB}) in the valence band. At the surface of the holes, the positive holes (h^+_{VB}) either react with adsorbed water or surface OH^- groups to form hydroxyl radicals (0H!). Excess electrons in the conduction band probably react with molecular oxygen to form superoxide ions (O_2^-) , which can further disproportionate to form more hydroxyl radicals. These effects will break down and mineralize organic molecules, which break the carbon bonds of hazardous organic compounds(57). The Photocatalytic Reactor cell is illustrated in Figure A-34.

The titanium dioxide photocatalytic technology can be used to destroy chlorinated or unchlorinated organic contaminants and to reduce total organic carbon in water and in air. The systems are modular in construction and will treat air streams of 1 to 1,000 CFM and water streams of 1 to 100 gpm. Inorganic pollutants such as cyanide, sulfide, and nitrite ions can be oxidized to cyanate ions, sulphate ions, and nitrate ions, respectively. The technology has been used successfully to treat highly turbid effluent and dye wastes in plant operations(57). The technology is being developed to fully commercialization at this time.

Table A-7 summarizes AOP applicability.

12.2 ACTIVE OZONATOR VENDORS IN 1994

12.2.1 Capital Controls Company. Inc. Capital Controls Company offers three type of ozonators:

! Megos® Ozone Generator
Capacity: up to 2600 pound per day (PPD), water cooled

Note: † denotes ETL's advisory board member

COURTESY OF MATRIX PHOTOCATALYTIC INC.
PHOTOCATALYTIC REACTOR CELL
FIGURE A-34

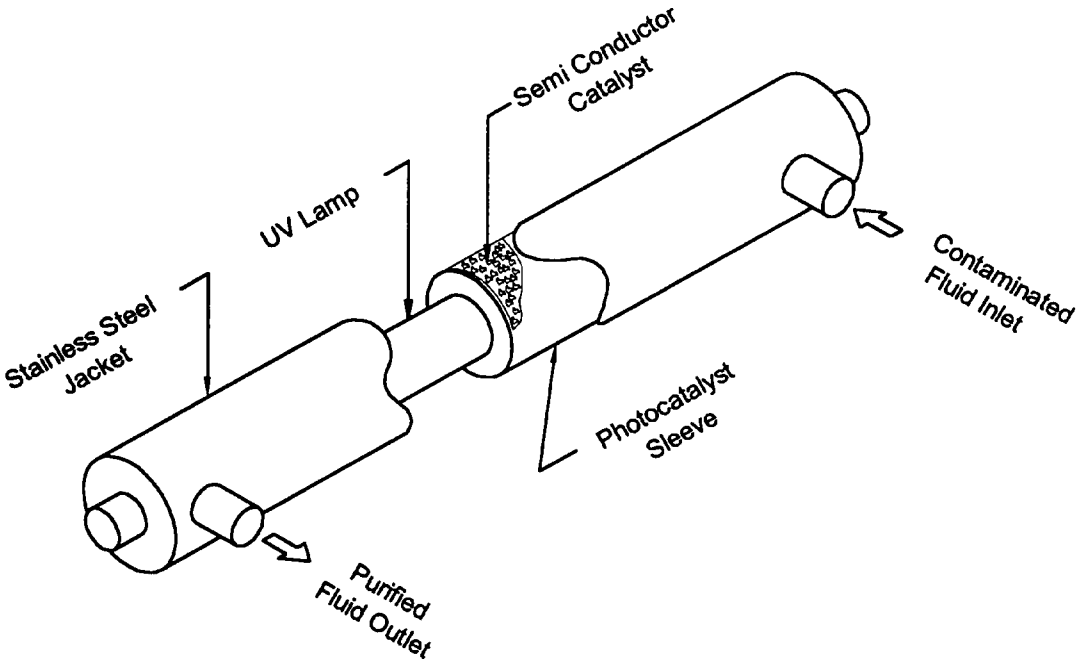

TABLE A-7
Summary of UV/Oxidation Processes and Applicability

Developer	Technology	UV/H_2O_2	UV/O_3	$UV/O_3/H_2O_2$	Ultrasound	Waste Media	Applicable Contaminants	
							Inorganic	Organics
Peroxidation System	UV/Oxidat-ion perox-pure™	X	X			Ground-water Leachate Waste-water	N/A*	VOC, SVOCs, TNT Halogenerated Hydrocarbon Pesticide, PCBs
Solarchem Environmental Systems	UV/Oxidat-ion Rayox®	X	X			Ground-water Leachate Waste-water	N/A	VOC, SVOCs, TNT Halogenerated Hydrocarbon, Pesticide, PCBs
Ultrox International	UV/Oxidat-ion Ultrox®	X	X	X		Ground-water Leachate Waste-water	Cyanide	VOC, SVOCs Halogenerated Hydrocarbon, Pesticide, PCBs, TNT
Purus	Xenon Plasma Air-3 Purlux 5	X				Ground-water VOC in soil VOC in air Phase	N/A	TCE DCE PCE Vinyl Chloride
Magnum Technology	Hydrocavit-ation UV/Oxidat-ion CAV-OX®	X				Ground-water Cooling Water Waste-water	N/A	Non-Specific Organic Compounds
Energy and Environmental Engineering	Excimer Laser LIPOD	X				Ground-water Waste-water	N/A	BTEX PCBs Phenols
Excalibur Enterprises	Ozone/Air Sono Catalytic Oxidation		X		X	Ground-water Soil sludges Leachate	Cyanide	PCP PCBs Pesticide Herbicide
Sun River	Solar/Elec-tric Photochem-ical SR 2000		X		X	Ground-water VOC in air Phase	N/A	BTEX
VM Technology	UV/Ozone GAC UVOX®		X			Ground-water Waste-water VOC in air Phase	Cynanide	BTEX Halogenerated PAH Phenol, TNT
Matrix Photo-catalytic, Inc.	Semicondu-ctor Photocata-lytic					Ground-water Waste-water VOC in air Phase	Cynanide Sulfide Nitrate	BTEX VOC, SVOCs TNT

*N/A Not Applicable

! Capozone® Ozone Generator
Capacity: From 800 PPD (15kg/h), air-feed gas systems
1,600 PPD (30kg/h), oxygen-feed system

! Monozone® Ozone Generator
Capacity: from 0.5 to 6 PPD (9 to 114 g/h) air-feed system
1 to 10 PPD (19 to 190 g/h) oxygen-feed gas system

12.2.2 Griffin Technics Inc. †

Griffin Technics Inc. offers a wide range of ozonators from 2 g/hour to over 1,000 PPD.

! Up to 5 PPD, ozonators are air-cooled plate design type
! From 7 PPD and up, ozonators are water-cooled design type

12.2.3 OREC (Osmonics* Ozone Research & Equipment Corporation)

OREC markets a wide range of ozone generators:

! 0.25 PPD to 1000 PPD at 8 percent by weight, oxygen feed system, and

! 0.13 PPD to 500 PPD at 4 percent by weight, air feed system.

12.2.4 O_3TI Ozone Technology. Inc.

O_3TI markets different sizes of ozonators

! P Series 1 PPD at 1.5 percent by weight for small installation, air feed, water cooled, and

! N Series 26.4 PPD for larger installation, air feed, water cooled.

12.2.5 03 Associates

0_3 Associates offers six different models of air-cooled corona-type ozonators. They have one-quarter flat-plate dielectrics with capacities of ¼ to 8 pounds per day:

Note: † denotes ETL's advisory board member

! From 0.25 to 0.85 PPD, air feed gas system
! From 0.58 to 8 PPD, oxygen feed gas system

12.3 U.S. HYDROGEN PEROXIDE MANUFACTURERS

The following are some of the U.S. hydrogen peroxide manufacturers:

! FMC†
! Solvay Interox
! Degussa, Inc.

12.4 CATALYST MANUFACTURERS

The following companies are some of the companies that are active in 1994 in the manufacture of various types of catalyst used in AOP processes.

12.4.1 Commercial Hydrogen Peroxide Catalysts

Active ion catalysts are often used for hydrogen peroxide decomposition. The ions commonly used include:

! Ferric, Ferrous
! Cupric, Cuprous
! Tungstate
! Vanadate
! Chromate, dichromate
! Molybdate
! Bromide, Iodide
! Titanium dioxide

12.4.2 Proprietary Hydrogen Peroxide Catalysts

The following are some of the companies that manufacture or offer proprietary catalysts for their hydrogen peroxide systems in 1994. The suppliers claim that these proprietary catalysts enhance the degradation of organic compounds. Some systems also operate without catalyst enhancement.

! Peroxidation Systems, Inc.†,
! Solarchem Environmental Systems†,
! Degussa.

Note: † denotes ETL's advisory board member

12.4.3 Ozone Destruction Catalyst

! Ultrox,
! European manufacturers[21]

12.5 UV LAMP MANUFACTURERS

UV lamps available on the market in 1994 include commercia UV lamps and proprietary lamps.

12.5.1 Commercial UV Lamps

Commercial UV lamps are made by the following manufactures

! Hanovia,
! Emerson Electric Co.,
! Voltarc Tubes, Inc.,
! Light Sources, Inc.,
! General Electric.

12.5.2 Proprietary UV Lamps

The following companies claim to offer or manufacture proprietary UV lamps to be used on their own equipment:

! Peroxidation Systems, Inc.†,
! Solarchem Environmental Systems†,
! Ultrox†
! Magnum Technology (CAV-OX)†.

Note: † denotes ETL's advisory board member

13.0 ACQUISITION

13.1 INTRODUCTION

Acquisition Planning is the term used to define the interface between the project*s requirements for equipment to carry out defined functions and the suppliers or manufacturers of the equipment. The procurement cycle includes the activities listed below that are normally required to acquire the advanced oxidation equipment:

! Potential supplier identification;
! Potential supplier pre-qualification;
! Treatability study procurement;
! Equipment supply bidding;
! Supply contract award;
! Expediting;
! Inspecting;
! Receiving;
! Over, short and damage resolution;
! Supplier services;
! Acceptance testing;
! Contract close-out; and
! Warranty claims.

Solicitation Methods are discussed in the Federal Acquisition Regulation (FAR) Subpart 16 and 17. Acquisition planning requirements are defined in FAR SubPart 7. When determining what type of solicitation method to use, representatives from contracting, legal, engineering, management, real estate and other departments should be consulted as appropriate.

13.2 ACQUISITION PLANNING CONSIDERATIONS

AOPs and commercial systems are still being developed. For this reason, the acquisition or procurement process is reasonably complex.

Like several other unit operations commonly used for water treatment, treatability studies are often required to:

Note: † denotes ETL's advisory board member

! Determine that the process can meet the effluent requirements, and

! Provide design data that can be scaled-up to the project size.

The technical uncertainty that exists before treatability is successfully completed adds to the complexity of the project.

Typical of a newly developing technology, some widely differing technologies are still competing in the AOP market. This situation makes it difficult to prepare mechanical specifications and requires careful analysis to procure the best equipment over the projected life of the equipment. In this regard, a realistic life-cycle for the equipment (considering potential technical advances) and a flexible installation and infrastructure (foundation) should be considered to allow replacement of equipment with minimum disruption when replacement becomes economically viable.

A number of other considerations must be addressed during the acquisition planning process. If a trade name or proprietary specification is to be used, the requirements of FAR Subpart 6 ER 1110-345-720 must also be satisfied. A brand name or equal specification is a proprietary specification unless two or preferably three vendors can meet the specification requirements. Brand name or equal specifications must contain the technical information that makes another vendor*s product equal to the brand named. When proprietary specifications are used, the designer must be certain that the equipment will operate correctly since the general contractor is absolved of this responsibility. An evaluation of the applicability of the Federal Information Procurement (PIP) requirements as identified in the Federal Information Resource Management Regulations must be accomplished. Consult your local contracting specialists regarding applicable procedures. The acquisition planning board should consider scheduling constraints that could potentially impact the method of procurement which includes such factors as Compliance Orders, Notices of Violation, Interagency or Federal Facility Agreements. Items related to treatability studies are summarized in Sections *13.3,* 13.6, and 13.7

Note: † denotes ETL's advisory board member

A key acquisition consideration is to start the planning process by clearly identifying all design decisions that must be made. Mistakes usually occur when considerations that are open to decision making are assumed to be fixed. Some of these considerations and the options available are as follows:

Scope of Work for the Equipment Supplier:

! Design;
! Design and Fabricate;
! Design, Fabricate, Deliver & Install; and
! Design, Fabricate, Deliver, Install, or Operate; and Training

13.3 TREATABILITY STUDIES

The treatability study scope and work plan must be carefully developed to ensure successful completion of the study. The study may be a bench-scale or pilot-scale study, depending on the study objectives, as identified in Section 13.5. As with any USACE effort that requires data collection and analysis, the USACE lab validation process, as identified in ER 1110-1-263 must be completed prior to commencing the actual study. The health and safety requirements identified in 29 CFR 1910.120 and ER 385-1-92 must also be satisfied.

13.3.1 Type of Study

The type of treatability study is discussed in Section 7.0. Keep in mind there are multiple vendors with different equipment. If pilot studies are done, there must be a conscious effort to give all vendors an equal opportunity to participate in the pilot phase. If a single vendor is chosen to do a pilot study, results should be reported in a manner that would allow as many qualified vendors as possible to bid on the equipment supply. For instance, if a system with low wattage lamps using ozone as the oxidant was used for the treatability study, the most important parameters should be identified such as detention time, ozone dosage, UV light dosage, and catalyst addition. A life-cycle cost analysis may be required to identify if one vendor has a much more cost effective system over the entire life of the project. However, data obtained from such a test would not be applicable for high wattage UV/H_2O_2 system. Procedures for

performing a life cycle cost analysis is discussed in Section 13.6.

13.3.2 Mobilization Requirements

When conducting on-site pilot testing with a single vendor, or when multivendor, “head to head” vendor life-cycle cost comparisons are accomplished, extensive planning is required. Vendors must be given ample time to set up and optimize the plant operation, and site coordination issues defined in Section 13.3.3. must be completed. These requirements will vary based on the type of study planned. During the optimization period, the vendor is generally allowed to use laboratory and analytical screening techniques at the vendor*s discretion. Aliquots of water are normally provided to vendors prior to pilot testing to allow the vendors to establish their initial setup. During the actual treatability study, vendors are monitored for a variety of inputs and outputs as identified in Section 13.4.6. These items will determine the actual system operation costs. During the actual treatability study, a USACE-validated lab is required. All sampling and analytical methods must be identified in the Quality Assurance Project Plan.

13.3.3 Treatability Study Coordination

13.3.3.1 Utility Requirements

Utility requirements must be identified for on-site treatability studies, and access to all utilities required by the vendors must be provided. In addition utilities are required to be monitored to develop life-cycle costs, reference Section 13.4.6.

13.3.3.2 Staging Area

A staging area for vendors doing on-site treatability studies is needed to set up their equipment and make all utility connections.

13.3.3.3 On-Site Treatability Study Work Plans

On-site treatability study work plans must identify proper disposal of plant effluents, including coordination with the proper regulatory authorities.

13.3.3.4 Waste Source

Consideration of the source water is especially important to insure that representative water is treated in the pilot test. The hot spot is not necessarily desired.

The waste source used during the treatability study must be representative of the waste to be treated over the life of the project. A waste that is either more dilute or more concentrated than the waste the equipment is expected to treat can seriously skew the results, especially when a life-cycle cost analysis evaluation is being accomplished.

13.3.3.5 Pilot Studies

Pilot studies should be coordinated with well installation, development, and/or pump testing if logistically possible, to limit the quantity of water requiring storage and disposal.

13.3.3.6 Monitoring Treatment Process Inputs/Outputs

The following inputs/outputs should be monitored:

! Power consumption should be monitored through a separate meter upstream of any load to the unit. Items such as ozone generators, and cooling units similar to those units to be used at full scale should be used. Be aware when the life-cycle cost analysis is performed, the scale up of the auxiliary equipment as well as the primary treatment equipment must be properly accomplished.

! Chemicals such as hydrogen peroxide, and catalysts, or other chemicals should be metered and usage recorded on an hourly basis throughout the actual treatability study. Disposal costs of catalysts or used lamps must also be addressed in the life cycle cost comparison for both water and air phase as well.

! Pretreatment requirements such as metals precipitation, pH adjustment, and filtration should be identified and costs allocated appropriately. Remember all UV Oxidation vendors do not require the same degree of pretreatment.

- Auxiliary system requirements such as cooling units and ozone generation equipment, ozone destruction units, and volatile organic catalytic destruction units, should be included in the treatability testing to identify efficiencies of the processes, off-gas concentrations, operational problems during the test, and provide a basis for establishing life-cycle costs.

13.3.3.7 Special Disposal Requirements

Special disposal requirements for waste streams generated should be identified prior to commencing testing. Quantities of sludges generated, off gases treated and storage of the treated water should be monitored for each participating vendor to ensure mass balance calculations can be performed. The catalyst for off-gas control must also be considered in life cycle cost estimating.

13.3.3.8 Shipping Samples Off-Site

Shipping samples off site should be addressed in the field sampling plan. The treatability exclusion allowed in the federal or applicable state RCRA regulations should be evaluated to ascertain whether special precautions need to be taken.

13.3.3.9 QA/QC

Each vendor, the consultant, or district process engineer must check or provide calculations for each unit to determine whether all inputs and outputs identified in Section 13.3.3.6 are accounted for in the mass balance calculations.

13.3.3.10 Reporting

The report format for the pilot treatability testing and/or LCCC should contain the elements addressed in Section 7.4.

13.4 ACQUISITION PLANNING STRATEGY

Overview of potential solicitation options are contained in Federal Acquisition Regulations (FAR). Users should consult with their contracting specialists for additional information. Issues relating to the particular type of acquisition strategy that will be used should be evaluated during the Acquisition Planning Strategy prior to the commencement of design. The acquisition planning strategy requirements are identified in FAR Subpart 7,

and Section 13.7 of this document. The four major categories of solicitation options that can be used for procuring equipment include:

! Performance Specifications which may be most suitable for short-term, low-flow-rate projects;

! Proprietary Specifications which may be used for systems that treat high-flow rates over an extended time period. In addition to the requirement of special approvals as identified elsewhere in this section of the ETL. A justification and approval (J&A) action is also required for this contracting step;

! Government Furnished Equipment which is not used that frequently due to issues relating to warranties and installation.

! Proprietary Request for Proposal (RFP) which must go through the justification and approval process at the headquarters of USACE Principal Assistant Responsible for Contracting.

The factors identified in Sections 13 should be weighed against the advantages and disadvantages of each of the procurement options. The procurement process should be evaluated on a case-by-case basis.

13.5 SELECTION FACTORS FOR PROCUREMENT

13.5.1 Process Effectiveness

Based on the information in this ETL and results of treatability studies, if one process cannot meet the treatment goals it should be eliminated from consideration. If one process generates excessive waste products due to pretreatment requirements, then these should be factored heavily into the overall treatment effectiveness and operating costs. The primary objective of the treatability testing is to show the effectiveness of the technology. Cost is a secondary objective to be addressed in the test. A more accurate estimate of the life-cycle cost is another benefit of treatability testing.

13.5.2 Relative Size

Relative size of the TN system compared to the overall project should be considered: If the TN system capital cost is a large percentage of the overall project cost, it may be necessary to reconsider the method of solicitation. If the cost of the TN system is a relatively small percentage of the total construction package, the TN system procurement is not likely to alter the method of solicitation. Special attention should be given to the specifications to ensure they are consistent with the type of TN system solicited.

13.5.3 Overall Size

The overall size (footprint) of the TN/Oxidation and auxiliary equipment will vary significantly among vendors. If the equipment must be placed in an enclosed facility, the impacts to the overall building size and associated site features must be taken into account, should a performance specification be used.

13.5.4 Duration

The longer a treatment facility is to operate magnifies the need for and importance of performing a LCCC. On the basis of first cost alone, there are certain TN systems that are not competitive. When a LCCC is performed, a system with a higher first cost may provide significant savings over the project life, especially in systems treating high-flow rates, greater than 250 gpm, over extended time periods.

13.5.5 Capital Cost

If capital cost is the only or primary consideration, an invitation for bid (IFB) with a performance specification often results in the lowest capital cost to the user.

13.5.6 Life Cycle Cost

If the lowest life-cycle cost is your primary consideration, a LCCC will be needed to justify use of a name brand or equal specification, Proprietary Specification, or Government Furnished Equipment.

13.5.7 Schedule and Resources

If a treatability study and/or a LCCC is required, adjustments to the schedule must be made early in the design phase. Likewise suitable resources must be allocated to ensure the LCCC and associated work plans are properly developed. A properly conducted pilot scale treatability study may cost approximately $250,0000 to $500,000. Bench-scale studies typically cost one order of magnitude less. Procedures in FAR subpart 6 and additionally for Military Construction projects ER 1110-345-720 must be followed when developing specifications that may be proprietary based on the results of a LCCC.

13.5.8 Availability of Resources to do a Proper Evaluation

An engineering staff with process experience and familiarity with the UV oxidation technology should be available along with cost engineering staff to properly evaluate and/or prepare the LCCC report.

13.6 LIFE-CYCLE COST EVALUATION

13.6.1 Definition of Study

Determine if a bench- or pilot-scale evaluation will be done, (refer to the SOW/WP)as identified in Section 13.3.

13.6.2 Evaluation Report

To prepare the Evaluation Report, refer to items in Sections 13.4 and 13.5.

13.6.3 Design. Development, and Construction Limits

Construction limits of proprietary equipment must be defined on the drawings and in the specifications for the following items:

! Piping: The end points of piping systems not to be provided by the UV/Oxidation system supplied, including auxiliary systems should be identified. Clearly specify and emphasize that the UV/Oxidation vendor is responsible for coordinating the hydraulic requirements for all equipment which include sizing piping to the various equipment, based on information provided in the plans and specifications.

! Controls: Control interfaces between the UV/Oxidation system and auxiliary components and other unit processes in the treatment train or overall treatment system master control system should be indicated. Clearly indicate the TN/Oxidation vendor is responsible for interfacing the controls with the other process units based on information provided in the plans and specifications.

! Auxiliary Equipment: Locations of auxiliary equipment if possible should be identified. Limits of work for water, power, and control interfaces that must be provided by the UV/Oxidation system vendor should be identified. The capacities available to the UV/Oxidation vendor should also be defined.

13.6.4 Proprietary Supplier

If a proprietary supplier is selected, the district contracting representative is encouraged to negotiate and enter into a pricing agreement with the supplier, fixing the cost of the proprietary equipment. This agreement allows the government to include it as a line item on the bid form, providing the limits of the work are clearly defined in the contract documents, which obligates the supplier to the same quoted price to all contractors, and eliminates the supplier*s ability to impact the selection of the prime contractor by giving higher bids to certain contractors. The pricing agreement should include provisions for other services that the suppliers would normally provide such as shop drawing submittals, operation and maintenance manuals and systems start up.

13.7 CONTRACTING AND LEGAL CONSIDERATIONS

13.7.1 Strategy Planning

During acquisition strategy planning, potential issues relating to but not limited to the following:

! real estate;
! site access;
! permit requirements for the study;
! FARS and supplements thereto;
! the Buy American Act;
! FIP/FIRMR applicability;

! potential proprietary specifications requiring approval; and
! how each of these impacts procurement.

13.7.2 Proprietary Specification Approval

ER 1110-345-720 should be consulted regarding case-by-case approval authority for proprietary specifications. In most cases, this requires a LCCC, consisting of the components identified in paragraph 13.6. To accomplish this, it generally requires a competitive LCCC among the responsive vendors replying to a market survey. The market survey consists of two phases, an identification of potential vendors through a Commerce Business Daily (CBD) or other sources sought announcement, and a method to determine qualified vendors from among those that responded to the market survey. After the vendors have been selected, the treatability study should be performed in accordance with the requirements identified in this section. The ability to meet the treatment goals is the primary selection factor; cost and maintainability are other factors to be considered.

Bench-scale studies are generally used to determine whether the stream is treatable using a particular AOP, although for all but the most unusual or complex streams, a bench-scale test will also supply sufficient design data to proceed. Bench-scale studies can be “generic” i.e. carried out in an independent laboratory carried out by a vendor (sometimes at no cost). Pilot-scale studies are normally conducted on-site because of the relatively large amounts of affected water required. Again there are several types. Some pilot studies are carried out by one vendor pre-selected on the basis of bench studies. Other cases use the “treat-off” concept and use multiple vendors to conduct comparative pilot studies.

The selection of an appropriate treatability strategy is an important milestone for the project. The strategy must complement and support the larger acquisitions strategy selected. The most important design consideration is to identify the decisions to be made and then to make them based on the best criteria available to the team.