CHAPTER 6
WASTEWATER TREATMENT

Section I. GENERAL CONCEPTS

6-1. Overview

The wastewater generated at a CVWF is widely variable in quantity and quality. The frequency and duration on the system will be site-specific. In addition, CVWF wastewater properties differ greatly from those of a typical sewage waste-water. The suspended solids concentration in a sewage wastewater usually is 200 to 400 milligrams per liter. In contrast, suspended solids in CVWF wastewater will range from 100 to more than 20,000 milligrams per liter.

a. Typical sewage treatment collection systems and plants are not equipped to handle the high suspended solids loading generated at a CVWF. A typical sewage treatment wastewater will flow through the collection system without depositing in the sewers because of the low solids content. However, the solids in a CVWF wastewater will deposit readily in the collection system if proper precautions are not taken. This buildup occurs primarily because of the large amount of solids and the fact that they are generally heavy compared with those in a sewage wastewater. These precautions include steeper slopes, higher velocities and a flusher system in the collection system. The wash facility will discharge a large volume of silt, clay, sand, and gravel, and an array of solid debris, such as ordnance, rags, rocks, and ration cans. This type of material does not normally occur in such large volumes in a sewage treatment wastewater.

b. The wastewater from a CVWF also will contain higher levels of grease and oils than a typical sewage treatment wastewater. Therefore, oil removal equipment must be installed at a CVWF waste treatment facility. The biological oxygen demand (BOD) and chemical oxygen demand (COD) are usually in the 200 to 400-milligram per liter range in a sewage treatment waste stream compared with 20 to 100 milligrams per liter in CVWF wastewater.

6-2. Treatment system

The water used to wash vehicles at CVWFs must be reason--ably clean but is not required to be drinking water quality. All wastewater to be recycled or discharged to an offsite treatment system must first undergo primary treatment in a sediment basin to remove gross sediment, free oils and grease.

a. A recycle system is a closed-loop system in which wastewater is treated, circulated, and reused. Secondary treatment of this wastewater is considered essential to minimize pump O&M, meet all regulations, and protect the environment and health of the users. The waste water overflows from the sediment basin to a secondary treatment system consisting of either an equalization basin, followed by intermittent sand filters or a lagoon system, and wash water supply basin.

b. In a nonrecycle (or discharge) system, the sediment basin is followed only by an equalization basin, if required, to bring the discharge to a quality and quantity that complies with requirements of the off-site treatment plant.

c. A water supply basin may also be required in a discharge system if the water source cannot meet the immediate demands of the wash facility. If water is not recycled, a good quality, reliable watersource must be used. If a discharge system Is being considered, the designer should consider the flow and quality requirements of the installation's sewage treatment plant authority and design the onsite treatment system and conveyance accordingly.

Section II. DESIGN PARAMETERS

6-3. Criteria

In designing the wastewater treatment system for the CVWF, the hydraulic floor will dictate the size of the collection and treatment system needed. Local water supply and weather conditions also affect the choice of treatment systems. In regions with a limited water supply, strict water conservation and reuse techniques need to be reviewed before deciding to recycle the water. Factors to consider in designing the treatment system are the wash period, cleanup time, water usage factor, wash, stormwater, water flow demand, and wastewater volume.

6-4. Wash period (Tw)

The wash period is the continuous time, in hours, that the CVWF is expected to operate each time the facility is used. This time is not the minimum or maximum time that individual vehicles spend at the facility; it is the time during which the facility is expected to be operated (see chap. 3). The wash period does not include the time required to fill and drain the prewash bath (when included) or to clean the facility. The installation must establish an operating schedule of the CVWF based on projected facility demand.

6-5. Cleanup time (K)

The recommended design time to drain the prewash bath and clean up the facility is one (1) hour.

6-6. Water usage factor (U_f)

The usage factor is the estimated percentage of time that water will be flowing at maximum capacity for any component at the facility. This factor is used in determining the overflow rate into the sediment basin. The range is between 20 and 90 percent. Usage factors vary between component parts of a CVWF; a prewash bath will normally require the use of a different usage factor than a wash station.

6-7. Storm water

Rain that falls onto the pavement should be directed toward the treatment system since this stormwater may contain residual contaminants from the handstands. Stormwater runoff from adjacent unpaved areas should be directed away from the wash facility. The treatment system should be large enough to treat stormwater collected on the paved areas of the wash facility or captured on the basins; but not necessarily concurrently with water generated during a peak use period. Excess water generated from a storm event can be treated during low use periods. Stormwater flow is estimated by the Rational Method as discussed in TM 5-820-1. The area of each surface type must be estimated first. After the treatment system is sized, the computations used for each surface type should be compared with those used for the estimate and appropriate adjustments made to sizing the basin.

6-8. Stormwater bypass

A stormwater bypass should be provided at the head end of the treatment system just before the sediment basin. Stormwater diversion prior to treatment should be considered standard practice only if the CVWF is in a shutdown mode and the wash facility has been cleaned up. This diversion should be operated after each day's shutdown and when it is expected that the facility will not be in use for long periods of time, such as over a winter season.

6-9. Washwater demand

The following section defines the washwater demand parameters and computations for use in sizing the various conveyances, wash facilities and treatment facilities in a CVWF.

a. Parameters.

(1) *Terminology*

V_B = volume of tracked bath(s)plus volume of dual-purpose bath(s), filled to maximum operating depth, in gallons.

N_{wc} = total number of water cannon nozzles at the bath

$F_{(i)}$ = design flow rate per demand location, in gpm (1pm)

i = demand location

$N_{(st)}$ = total number of wash hoses at the wash stations

N_{t1} = total number of flusher points in additional trench drains at preparation areas

N_{ud} = total number of flusher points in u-drains at the bath(s)

C = coefficient of runoff

I = rainfall intensity for region

A = area of rainfall for surface type

N_{t2} = total number of flusher points in trench drains at the wash station area

N_{int} = number of vehicle interior wash points at the wash stations

N_y = number of yard hydrants in wash area

(2) *Water demand calculations.* Water demands in gpm (1pm) are calculated using the following formulations.

Demand	Formulation
1. Bath flush, each occurrence	$Q_1 = V_B/D$
2. Bath water cannons, vehicle washing	$Q_2 = N_{wc}F_{wc}$
3. Wash stations, vehicle washing	$Q_3 = N_{st}F_{st}$
4. Flushing, additional trench drains	$Q_4 = N_{t1}F_{t1}$
5. Flushing, bath u-drains	$Q_5 = N_{ud}F_{ud}$
6. Flushing, wash station trench drains	$Q_6 = N_{t2}F_{t2}$
7. Wash stations, interior washing	$Q_7 = N_{int}F_{int}$
8. Yard hydrants, clean-up	$Q_8 = N_yF_y$
9. Stormwater runoff, paved areas	$Q_9 = C_pIA_p$
10. Stormwater, on basins	$Q_{10} = C_bIA_b$

b. Maximum Flow. The pipes, trench drains, and weirs at the facility must be designed to handle the maximum (Q_{max}) flow rate expected at any given instant. The designer must consider all of the water and solids from each source expected at any instant. The maximum flow is usually expected to occur during cleaning operations when the bath is flushed, the trench flushers are on, and the wash station hoses and water cannons are in full use. The usage factor adjustment is not applied, since this is the peak situation and all systems are operating. The maximum flow rate is the greater of either the sum of Q_1 thru Q_8, contributions or the sum of Q_9 and Q_{10} stormwater.

$$Q_{max} = Q_1 + Q_2 + Q_3 + Q_4 + Q_5 + Q_6 + Q_7 + Q_8 \quad \text{(eq 6-1)}$$

or

$$Q_{max} = Q_9 + Q_{10}$$

Note: The designer must determine which combination of flows are applicable to any particular conveyance feature; not all flows will be present in all conveyances, trench drains, or overflows.

6-10. Water volume

a. *Parameters.* Water volume computations are based on the following parameters:

(1) *Terminology.*

K = cleanup time (generally 1 hour)

T_w = wash period

T_t = wash period + cleanup

T_s = storm duration (generally l hour)

B = number of times the bath is filled from the water supply basin per wash period. (Bath volumes taken from the equalization basin are not counted since these volumes do not receive complete treatment through the secondary treatment system. The number of times that the bath is drained and filled will depend on the length of the wash period and the visual quality of bath water.)

U_i = usage factor (from 20 to 90 per cent) at source

(2) *Volume calculations*

	Formulation
Volume from bath flush	$V_1 = V_B B$
Volume from bath water cannons	$V_2 = Q_2 T_t$
Volume treated at wash station hoses	$V_3 = Q_3 T_t$
Volume from additional preparation area flushers	$V_4 = Q_4 K$
Volume from bath U-drain flushers	$V_5 = Q_5 K$
Volume from wash station trench flushers	$V_6 = Q_6 T_t$
Volume from interior wash points	$V_7 = Q_7 T_w$
Volume from yard hydrant	$V_8 = Q_8 K$
Volume of stormwater runoff-pavements	$V_9 = Q_9 T_s$
Volume of stormwater falling on basin surface	$V_{10} = Q_{10} T_s$

b. *Average volume.* V_{ave} is an estimate of the total volume of water used during an average wash period. The average wash period is the period of time during which the vehicles are being washed in typical washing operation. Usage factors are ap-- plied to each source of water, since not all water cannons, hoses, and trench flushers will be operating at all times. V_{ave} (eq 6-2) is used to estimate the size of the water supply basin and the equalization basin or polishing lagoon:

$$V_{ave} = U_1V_1 + U_2V_2 + U_3V_3 + U_4V_4 + U_5V_5 + U_6V_6 + U_7V_7 + U_8V_8 + V_9 + V_{10} \quad \text{(eq 6-2)}$$

Note 1: V_1, V_5 and V_6 are included in the equation only if these volumes are withdrawn from the water supply basin. Volumes withdrawn from the equalization basin are not included in the formulation.

Note 2: V_9 and V_{10} are not apart of V_{ave} in a standard design. Including V_9 and V_{10} as a part of V_{ave} is the designer's option.

c. *Maximum volume.* V_{max} is an estimate of the total volume of water used during the peak use period of the facility. The same equation (6-2) used to calculate V_{ave} is also used to calculate V_{max}; the difference is that the wash period used to calculate the individual volumes, V_2 through V_8, is the length of the peak washing operations, not the length of the average washing conditions. Usage factors are still applied in the equation to compensate for the time during which the nozzles are not operating. The V_{max} value is the primary volume used in sizing the water supply basin and the equalization basin or settling lagoon. V_{max} is also used in the sizing of the intermittent sand filters.

d. *Water balance.* The designer must perform a water balance during the preliminary design phase. The purpose of the water balance is to ensure that basins such as the equalization basin do not overflow and that the water supply is not totally drained. Thus, the designer must make provisions to handle the peak use water volume in each basin during the washing operations. Based on the results of the water balance, the designer may be required to increase, or may be able to decrease the size of the basins.

Section III. PRIMARY TREATMENT

6-11. Function

All wastewater from the CVWF must undergo primary treatment. A concrete sediment basin with a oil skimmer device is provided to separate and remove contaminants such as grease, oil, and sediment by gravity. Free oil shall be removed in this basin prior to pumping which could cause oils to emulsify. Wheeled vehicle access shall be provided to this basin for removing the large volumes of sediment that accumulate in this basin. The bottom of the basin should be sloped approximately one percent away from the entrance ramp to assist in dewatering when the basin is emptied. Sediment basins are designed with oil recovery, inlet and outlet control structures, and drains.

6-12. Number of basins

In a wash facility, with or without bath, a sediment basin with only one cell may be provided, however, it must be designed to treat the entire volume of water and sediment expected. Maintenance procedures must insure minimizing down time when the single basin is cleaned. A sediment basin with two cells should be provided if the wash facility cannot be shut down for scheduled cleaning and repairs. Providing a two-celled sediment basin allows one cell to be isolated for cleaning and repairs while the other one remains in service for primary treatment. The detention time of the waste water may be reduced in the basin if only one cell is operable due to closure of the other, but the wash facility may still be utilized. During normal operations of a facility with a bath, one cell is used to treat the volume of waste wash generated from vehicle washing water from the wash, while the adjacent cell is used to treat the volume of water from the bath flush and clean-up activities. The functions of the two cells should be alternated frequently, to distribute the sediment loads evenly between basins.

a. *Single-cell configuration without bath.* At small facilities without bath, a single-basin system as depicted in figures 6-l and 6-2 should be provided. A single sediment basin system should function hydraulically, such that the inflow volume is equivalent to the overflow volume. If a large surge of water is expected, then sufficient storage volume must be allowed in the basin to ensure that a minimum detention time of 2 hours is maintained. The basin volume must account for the accumulated sediment storage volume between cleanouts. The outlet structure is a weir constructed across the width of the access ramp. The location of overflow weir ensures a constant water level in the basin.

b. *Dual-cell configuration without bath.* At larger facilities, without bath, where washing down time during basin cleaning may not be desired or practical, dual cells similar to figures 6-1 and 6-2 should be provided. Cells would have a common wall and be provided with common inflow and outflow control structures.

c. *Dual-cell configuration with bath.* A dual-cell system for use with baths in large facilities is shown in figures 6-3 and 6-4. Before bath(s) are to be emptied into the sediment basin, the operator should assure that the water level in one of the basin cells in the sediment basin is at low level. The volume of bath water will be stored in this cell. The adjacent cell continues to provide primary treatment for wastewater from the washing facilities. This configuration allows the entire surge volume of wastewater from the bath to be held for the proper detention time and not become short circuited in the sediment basin. The volume of each cell is designed to hold the storage of sediment between scheduled cleanouts plus the entire volume of a bath release and clean-up water.

d. *Single-cell configuration with bath.* For small facilities with bath, a single-cell configured similar to that depicted in figure 6-3 may be provided if the wash facility can be taken out of service during the cumulative period of time to drain the bath(s) and draw down the sediment basin.

6-13. Siting

Sediment basins are sited to receive gravity flow of wastewater from the wash facility. The basin should be close to the washing operations to avoid long conveyance distances and severe depths of conveyances being placed at the required grades. Basins should be oriented along the axis of prevailing winds with the outlet end and oil skimmers located downwind so that surface currents will carry free oils toward the removal equipment. The basins must not be readily accessible to troops but should be visible from the control building and easily accessed by the CVWF operators.

6-14. Sizing

The size of each cell in the sediment basin will be based on the volume of water to be treated and the volume of sediment to be stored in the basin between cleanings. The user must determine how often the sediment will be removed from the basin. It is recommended that each cell of the basin be cleaned at least once per year; however, the exact number of basin cleanings will depend on variations of soiling, user requirements, and other considerations unique to the installation. In addition to the water and sediment depths, from 1 to 2 feet (0.3 to 0.6 meter) of freeboard must be provided. Figure 6-4 shows typical water and sediment depths. Each cell should have a minimum length-to-width ratio of 3 to 1 to allow for the proper settling time. The turning radius of cleaning equipment, such as a front-end loader, should be considered in determining the width of the cells.

a. *Velocity.* A uniform horizontal flow-through velocity of from 0.5 to 2 feet per minute during washing operations is desirable. The lower range is preferred for predominantly silt and for clay-type

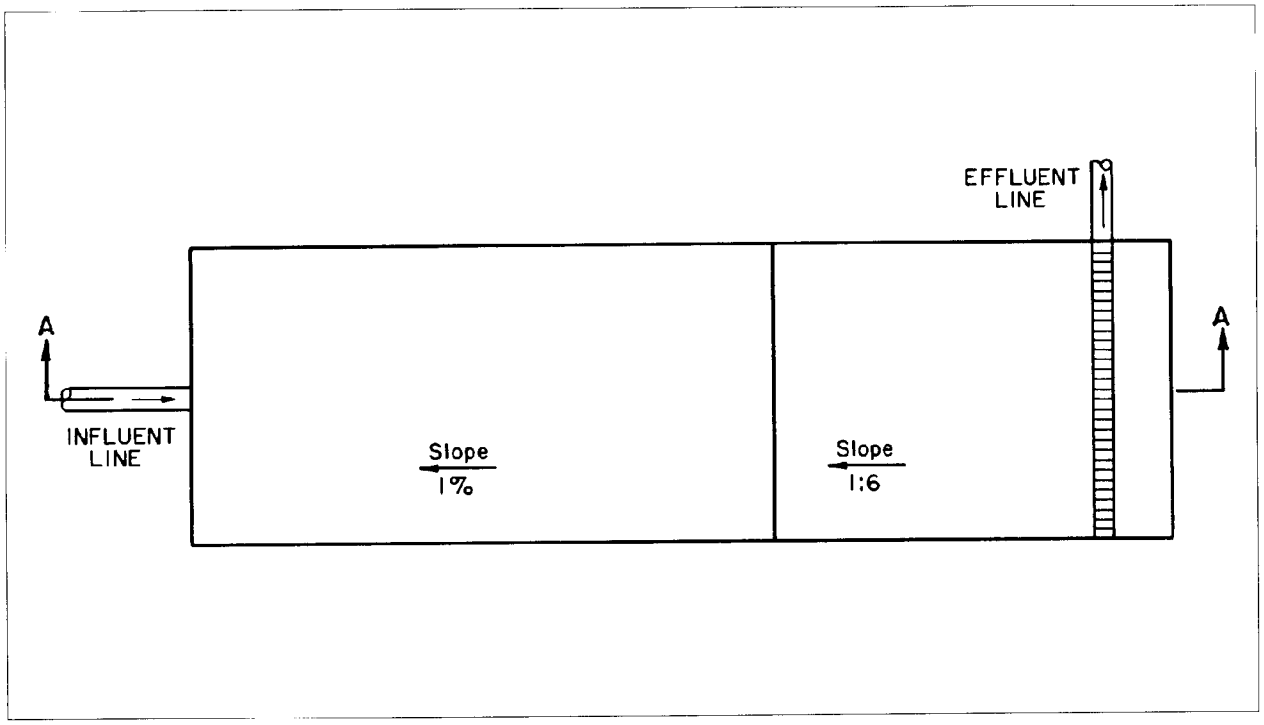

Figure 6–1. Single-cell sediment basin—plan view.

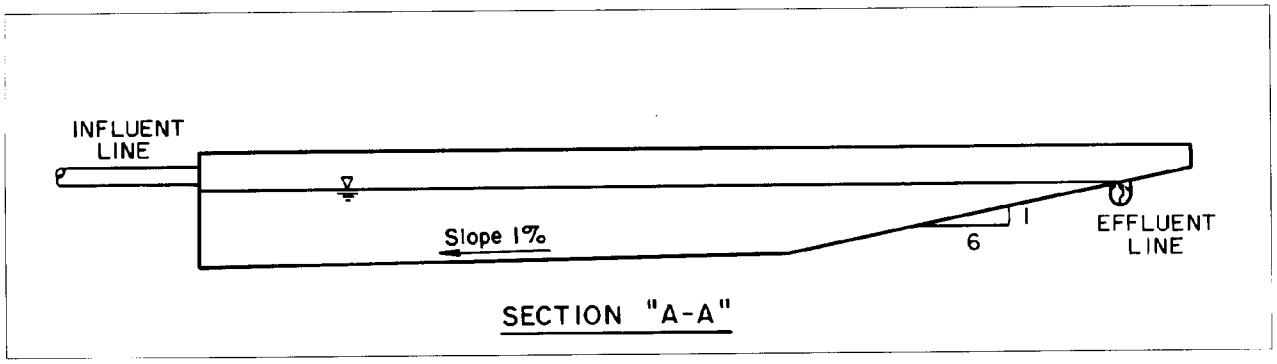

Figure 6–2. Single-cell sediment basin—cross section.

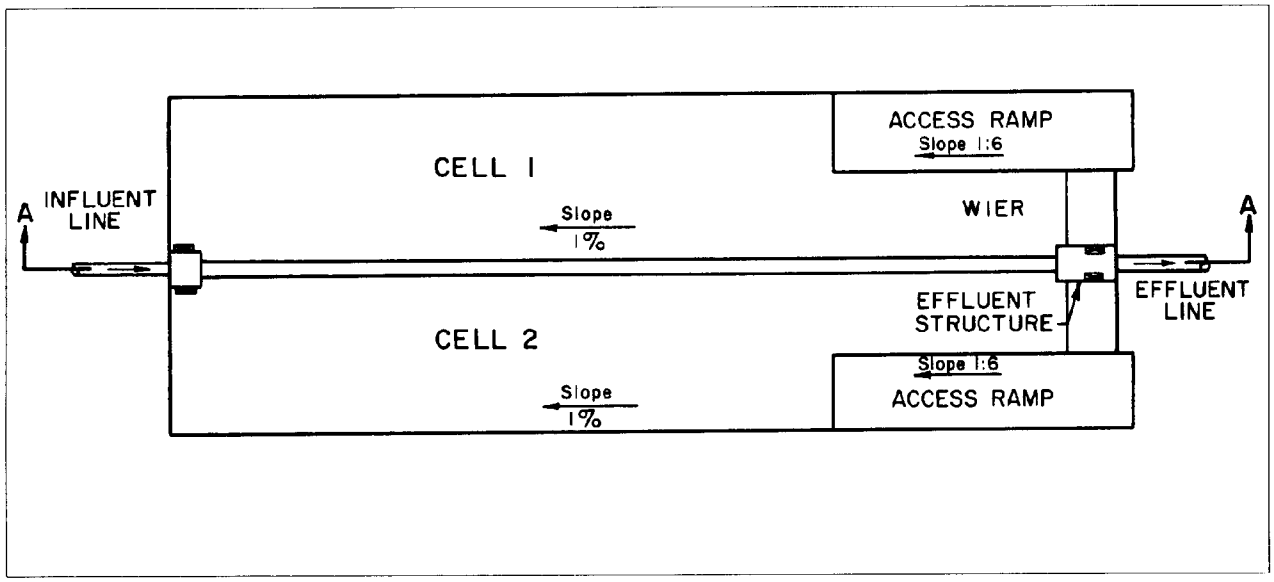

Figure 6–3. Dual-cell sediment basin—plan view.

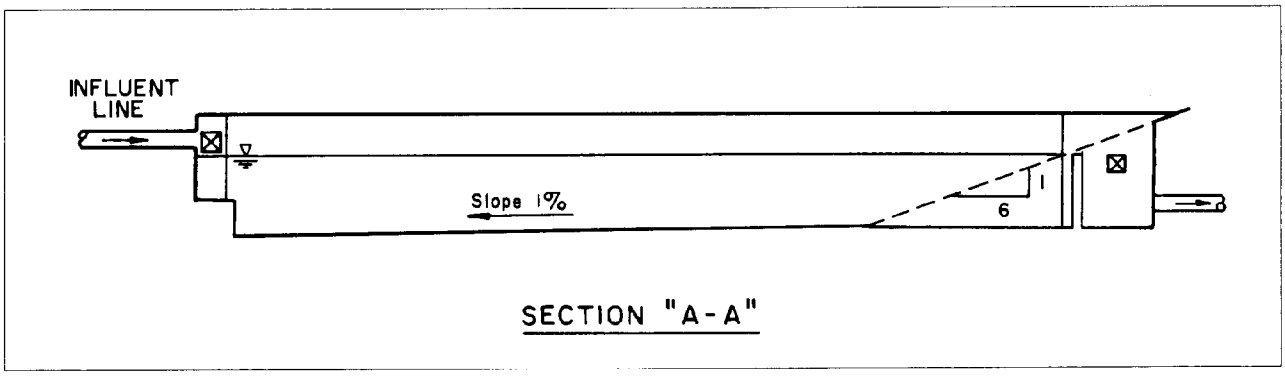

Figure 6–4. Dual-cell sediment basin—cross section.

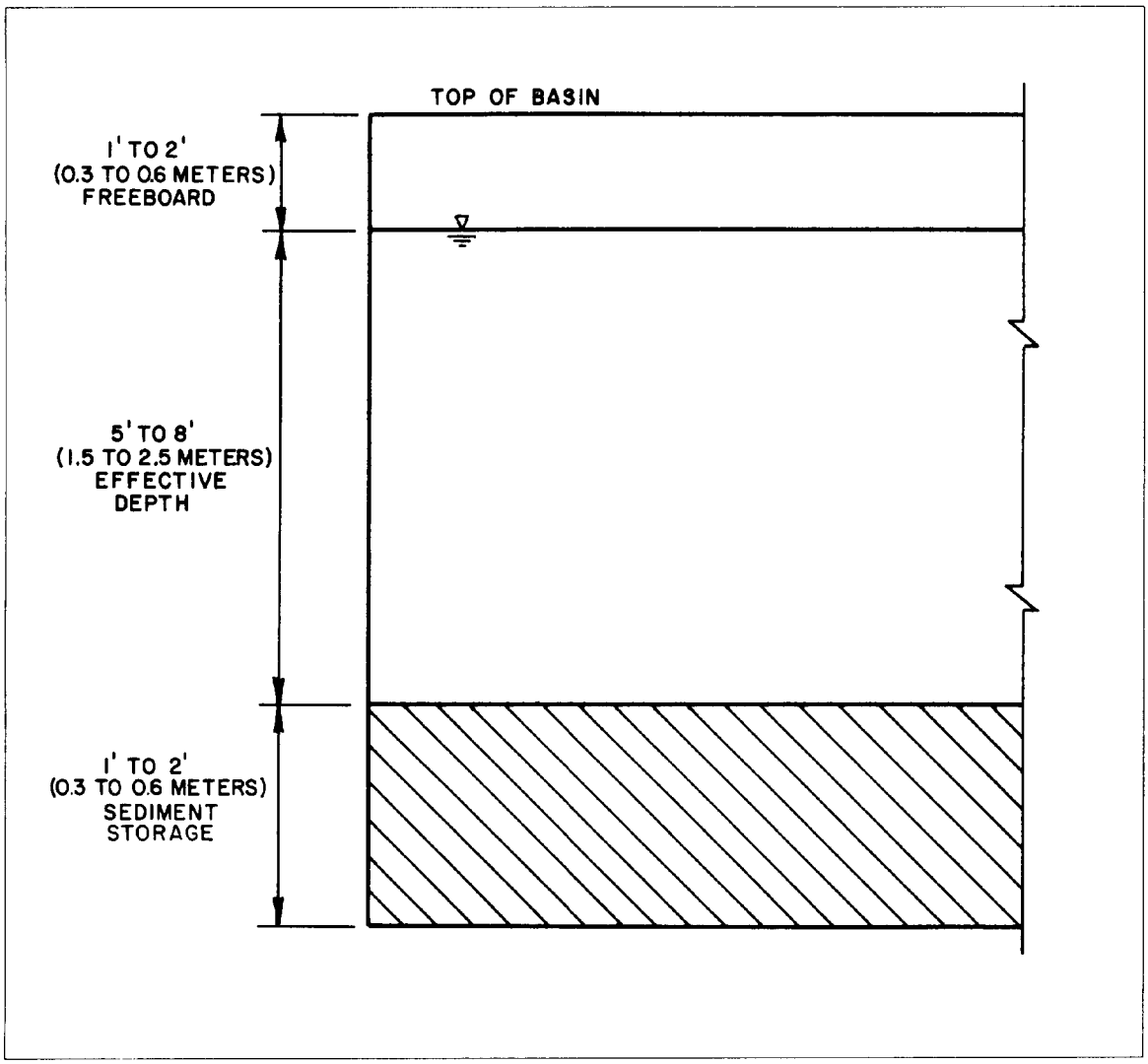

Figure 6–5. Typical design water and sediment depths.

soils; the higher rate applies predominantly to sandy soils.

b. *Sediment volume (V_{sed}).*

(1) Each basin must store the volume of sediment expected to accumulate between basin cleanouts. The value used to predict sediment volume (V_{sed}) must be based on the expected vehicle soiling and number of basin cleanings per year. Heavy soiling can be expected on vehicles returning from training exercises in off-road areas that have wet field conditions and cohesive soils. The sediment volume will vary between installations and even within the installation due to different soil types in the training areas, training schedules, climate and weather conditions. Table 6-1 lists estimates of the amount of dirt removed from different tactical vehicles each time it is washed. Experience may indicate that a value outside of this recommended range be used to estimate the sediment volume.

Table 6–1. Estimated volume of material per vehicle

Vehicle type	Average heavy soiling, cu ft/vehicle (m^3/vehicle)	Average light soiling, cu ft/vehicle (m^3/vehicle)
Tracked	2.0 (0.06)	1.5 (0.04)
Wheeled	0.6 (0.02)	0.5 (0.01)

(2) Equation 6-3 can be used to determine to predict the total annual sediment volume. If dual-cells are provided, each basin will store half of the total sediment volume expected over the time period between cleanouts, assuming cells have been evenly alternated. Equation 6-4 is used to calculate the required basin volume.

$$\frac{\text{Sediment Volume}}{\text{Year}} = \frac{\text{Sediment Vol}}{\text{per Tracked Vehicle}} \times \frac{\text{No. tracked washed}}{\text{Year}} + \qquad \text{(eq 6–3)}$$

$$\frac{\text{Sediment Vol}}{\text{per Wheeled Vehicle}} \times \frac{\text{No. wheeled washed}}{\text{Year}} \qquad \text{(eq 6–4)}$$

V_{sed} = sediment volume per year/number of cleanout per year

c. *Water volume.* For a single-cell sediment basin, the cell should be sized for a detention time of from 2 to 4 hours. For a dual-cell basin, each cell should be sized to detain the wastewater for 2 to 4 hours with cells operating in parallel; or from 1 to 2 hours with one cell in operation. Wastewater having a high cohesive soil content will require settling times at the upper limit of the range; settling times for noncohesive soils should be at the lower end of the range. One method of determining optimal detention time (T_D) and settling velocity is to perform bench-scale settling tests for the soil conditions at each training site. Another method is to use Stoke's Law in computing trap efficiency. The basin should have a total effective water depth of 5 to 8 feet (1.5 to 2.5 meters).

(1) *Sediment basin overflow rate.* The basin overflow rate is an estimate of the flow rate of wash water used during a wash period (T_w (eq 6-5). It is determined by reducing the maximum flow rate by usage factors. This flow rate is used when determining the detention time and sizing the cells for the sediment basin. The designer must use discretion as to whether the trench flushers in the wash area will be operable while the vehicles are being washed. The trench flushers in a bath will not operate during washing. The designer also must use engineering judgment as to what percentage of time the trench flushers (if any) in the vehicle preparation area will be operable while the vehicles are being washed.

$$Q_{over}=U_2Q_2+U_3Q_3+U_4Q_4+U_5Q_5+U_6Q_6+U_7Q_7 \qquad \text{(eq 6-5)}$$

(2) *Single-cell system.* In a single-cell system, the cell should be designed to store the water for the designed detention time and should also hold the sediment volume collected between cleanouts. Equation 66 gives the water and sediment volumes needed for sizing a single cell at a facility without a bath. If a bath is provided, the bath volume, V_1, must be added to the equation. This equation calculates only water and sediment volumes; it does not include the freeboard which must also be added. Also Q_9, stormwater flow, would not be normally considered an additive flow. The basin should be sized to handle the greater of two volumes, maximum wash water volume or stormwater volume.

$$\text{Volume} = (Q_{over}+U^8xQ_8) \times T_D + V_{sed} \qquad \text{(eq 6-6)}$$

(3) *Dual-cell system.* In a dual-cell system, each cell must be sized to store the maximum volume expected at any given time. The volume of each cell will depend on the larger of:

Case 1: Volume = $0.5 \times V_{sed} + Q_{over} \times T_D + V_1$

Case 2: Volume = $0.5 \times V_{sed} + 0.5\, Q_9T_s$

6-15. Sediment basin influent structure

The influent line should empty into the deep end of each cell of the basin, opposite a ramped entrance that provides access for the cleaning equipment. A structural baffle or energy dissipator may need to be installed at the influent end to disperse the wastewater and solids across the width and to help prevent water and solids from short-circuiting to the effluent structure. The inlet invert must be placed higher than the maximum water level in the basin to prevent deposition of solids in the influent line or inlet structure. Motorized gates may be used in a two cell basin to make it convenient for the operator to switch the influent flow from one cell to the other or to use both.

6-16. Sediment basin effluent structure

The effluent structure must be located opposite the influent end in order to maximize the detention time in the basin. Protective baffles, fixed or removable, may be installed in front of the effluent opening to prevent discharge of floating debris and oil. A section through the overflow trench for a basin without bath is shown in figure 66. The effluent structure for a basin with bath consists of adjustable, motorized gates used to regulate the height of the water in the basin (fig 6-7). This arrangement allows the operator to alternate treatment from one cell to the other or use both cells in parallel.

6-17. Sediment basin construction

Sediment basins are constructed of concrete in order that a front-end loader can enter the basin at the ramp and remove the sediment without damaging the liner. In addition, a concrete basin prevents oil and other wastes from seeping out of the basin into the surrounding soils.

6-18. Sediment basin drainage

a. The sediment basin must be provided with a drainage system which (1) allows the captured sediment to dewater for easier removal from the basin; (2) controls the discharge of large volumes after draining the prewash bath facilities; (3) permits other routine maintenance to the structure and/or equipment; and (4) permits preparation for winter shutdown.

b. Drain down of the basins for cleaning is accomplished through a drain line with a manually operated valve as depicted in fig 6-8. Drain down of

water trapped in the sediment is aided by gravel packed drains placed along the center wall or in the bottom of each cell. The pumping system shown in the figure is an alternate since, at this point in the treatment system, the main stream flow is by gravity and drainage may occur below the hydraulic grade line. The immediate return of the water drained from the sediment basin to the treatment process is desirable in order to facilitate the removal of any disturbed sediment and oil.

c. The valving depicted in figure 6-8 allows lowering the water level in the sediment basin to the expected maximum sediment level and dewater the captured sediment. Gravel packed drains or trenches are located around the inside perimeter of the basin or in the floor and consist of a perforated pipe encased in filter fabric and gravel. Valving and pumping facilities may be placed at either end of the sediment basin. Drains shall be located below the bottom of the basin or otherwise protected so that, during removal of sediment, they will not be disturbed or damaged. The trench method can be used at either the influent or effluent end of the sediment basin.

6-19. Sediment removal

Sediment basins are not equipped for continuous removal of solids and therefore, the basin should be sized to allow solids accumulation over at least one year based on the estimated solids removed from the vehicles. To remove the accumulated solids, the basins are first drained of water to the maximum extent possible with slow drains, sediment dewatering drains, and/or pumps as described in the previous section. The solids are then removed using front-end loaders and dump trucks that access the solids zone via the concrete ramp. The material is hauled away for proper disposal in accordance with local, State, and Federal regulations.

6-20. Oil removal

Free floating oils and greases carried into the sediment basin as a product of vehicle washing are lighter than water and therefore rise to the surface. The oils and greases are removed using motorized surface tube-type oil skimmers in each basin. The skimmings are stored in an above-ground or underground waste oil storage tank located near the sediment basins. Skimmers are usually located at the downwind end of the basins. Floating or fixed baffles which extend below the effluent weir elevation may be provided to direct oils toward the skimmer and to prevent the carryover of oils past the effluent weir.

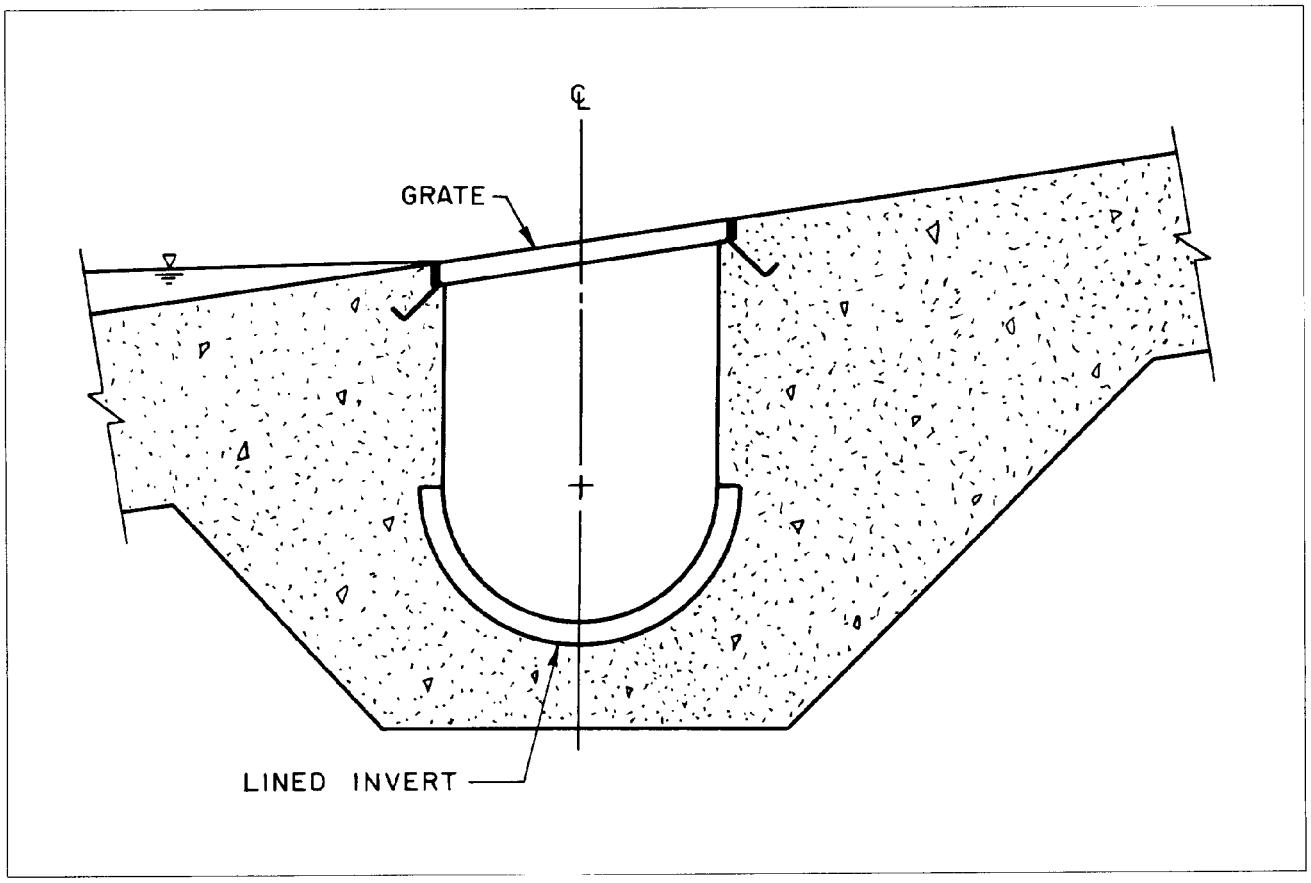

Figure 6–6. Typical effluent structure with an overflow trench. Sediment basins, without bath.

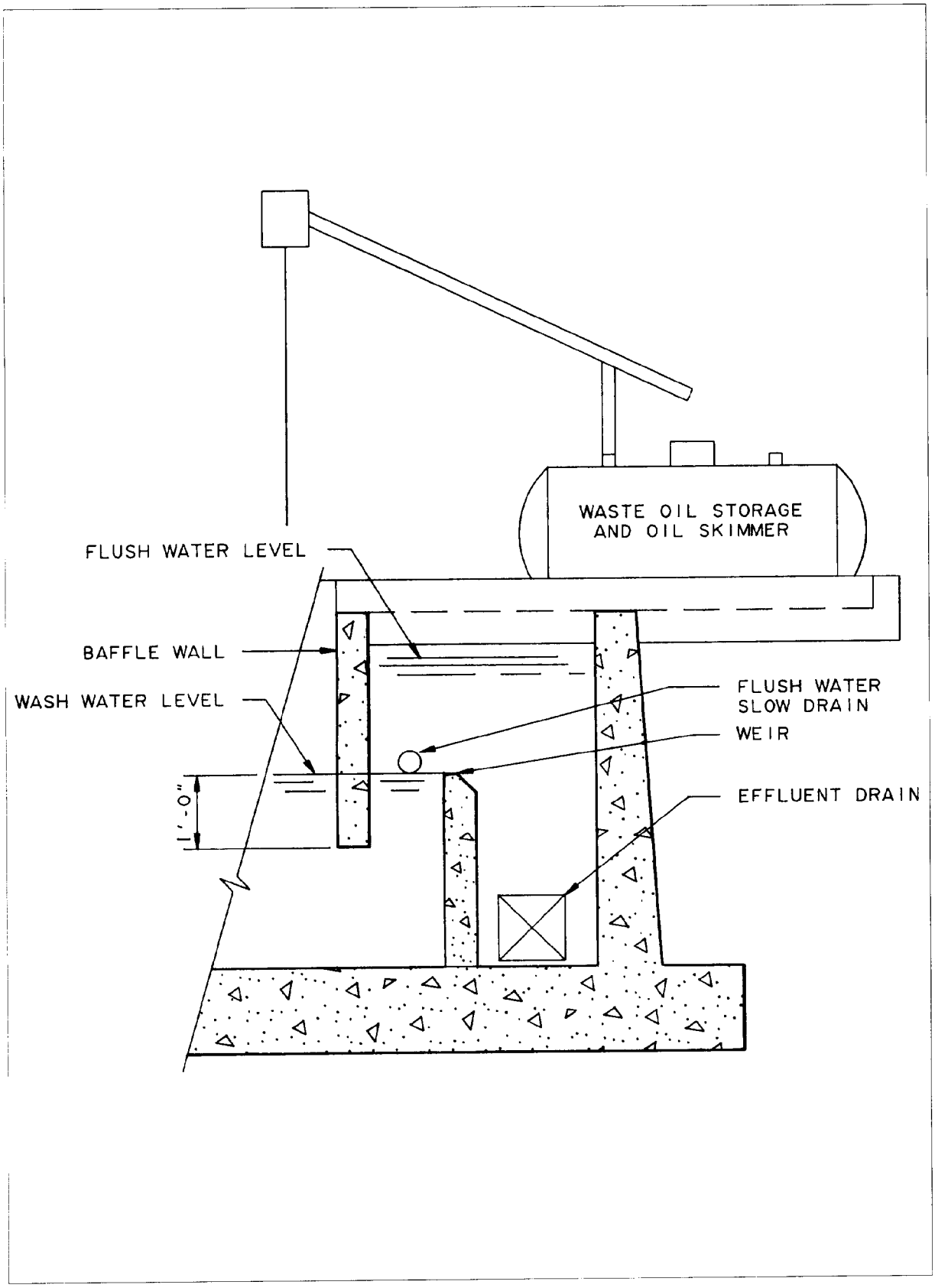

Figure 6–7. Typical effluent structure with motorized gates. Sediment basins, with bath.

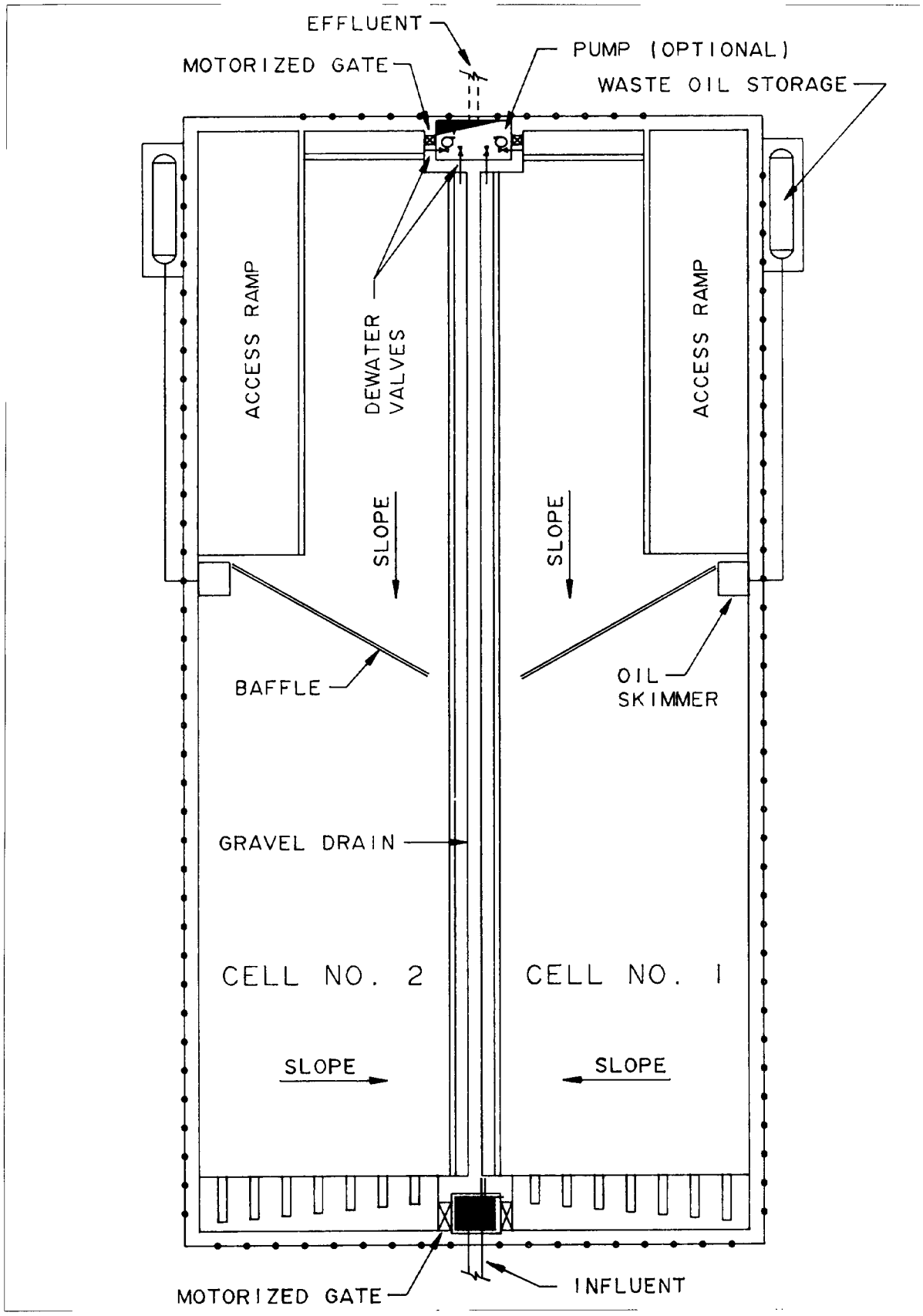

Figure 6–8. Sedimentation basin drain system.

6.21 Waste oil storage

Waste oil storage tanks are designed, constructed and installed in accordance with current U.S. Environmental Protection Agency, State, or Local regulations for above ground or underground storage tanks. Storage tanks should be 500- to 2000-gallon (1893- to 7570-liter) capacity, depending on the estimated amount of oil recovery and frequency of cleanout. Positive spill containment should be provided at the cleanout port and directed back to the sediment basin.

6-22. Maintenance

Routine maintenance of the sediment basin and appurtenances will be minimal. Sediment should be removed from each cell at least once per year. The waste oil storage tank should be emptied before its capacity has been reached. Provide appropriate site gauges and/or high level alarms. Oil skimmer devices must be strategically located, easily accessible for servicing and durable. Daily inspection of the oil skimmer unit is required to insure continuous, trouble-free operation.

6-23. Other considerations

Sediment basins should have pipe rail or fencing mounted on the wall in accordance with OSHA requirements for safety considerations; or the grade surrounding basins located lower than top of wall to provide a safety barrier. Hydrostatic pressure relief should be provided where generally high water tables exist and basins should be designed to prevent flotation when empty. Access ramps should be serrated for vehicle traction. Inlet and outlet ends should be readily accessible to operators, through an access road around the basins. Lighting should be provided at the inlet structure and at the outlet structure.

Section IV. SECONDARY TREATMENT

6-24. Onsite secondary treatment

At installations where an adequate, dependable, low-cost wash water source cannot be found, and favorable site and weather conditions exist, a recycle water system should be used. The water source must adequately supply clean water on demand during the peak wash periods. The quality of effluent from a sediment basin usually is not adequate for discharge to a sewage treatment plant, even if treating non-cohesive soils and therefore, cannot be used as recycled water. For recycling, secondary treatment is required. If an adequate water supply source is available and recycling would not be economical, the wastewater may be discharged to an existing sewage treatment plant for further treatment. In this case, onsite sediment basins followed by an equalization basin would still need to be provided. Two altemative onsite secondary treatment systems are available for treating waste washwater to a quality suitable for reuse in vehicle washing, namely, intermittent sand filtration and series lagoons. Intermittent sand filter systems are the preferred secondary treatment method for CVWFs. Where existing ponds, lagoons, or basins are available and environmentally suitable for use, a lagoon system should be considered. The most environmentally acceptable, cost-effective system should be used.

6-25. Objective

Secondary treatment removes suspended matter, microorganisms, impurities, and minor residual oils from the product water. These materials are carryovers from the primary treatment process and consist mostly of colloidal materials such as clays and fines that have not been removed during sedimentation. The removal of these suspended solids is essential to produce a relatively clean, clear, acceptable product for recycling as wash water.

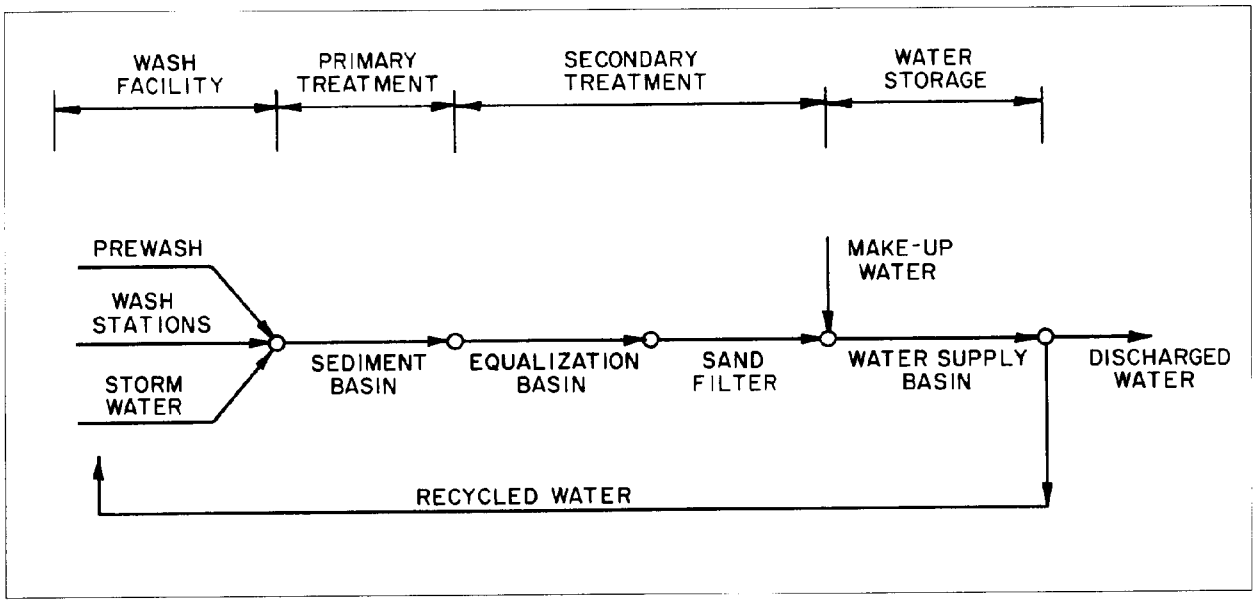

Figure 6–9. Components of an intermittent sand filter system.

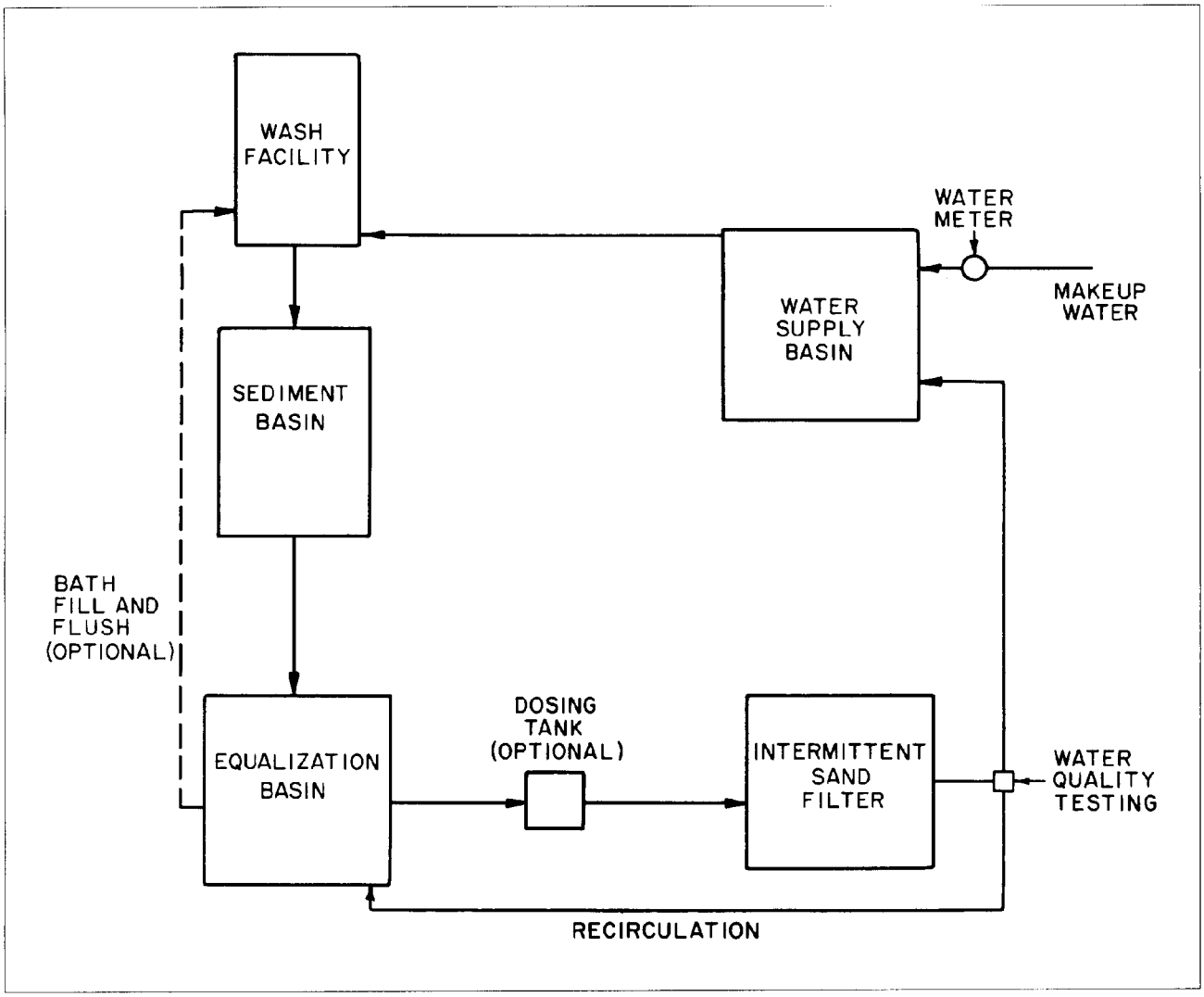

Figure 6–10. General schematic of an intermittent sand filter recycle system.

6-26. Intermittent sand filter system

This system, depicted in figures 6-9 and 6-10, consists of three components: equalization basin, optional dosing tank, and intermittent sand filter. All three units are located downstream of the sediment basin in the order listed.

a. *Equalization basin.* The equalization basin (figs 6-11 and 6-12) serves two main functions. First, it is considered a part of secondary treatment because it provides storage and flow dampening of the sediment basin effluent so that this water can be delivered at a controlled rate to the intermittent sand filters for final treatment. The basin buffers the fluctuations in wastewater flow and quality caused by variable use of the wash facilities. It also compensates for the difference between basin inflow and intermittent sand filter application rates. By regulating the dose of water to the intermittent sand filter at designated intervals and rates, the filter size can be minimized. Second, the equalization basin is considered part of primary treatment because it provides a quiescent zone for settling of fine, suspended solids that have been carried over from the sediment basin. This function improves the overall suspended solids removal efficiency of the treatment process. Unfiltered water from the equalization basin should be used as a source of water for filling the bath prewash and for trench drain flushing, thereby conserving the water supply. When equalization basin water is used in this way, separate delivery pumps and piping are required, but the size of intermittent sand filters and water supply basins are usually reduced.

(I) *Siting.* The equalization basin is located at a lower elevation than the sediment basin and the wastewater should flow by gravity from the sediment basin to the equalization basin.

(2) *Sizing.* The size of the equalization basin will be based on several factors, including the

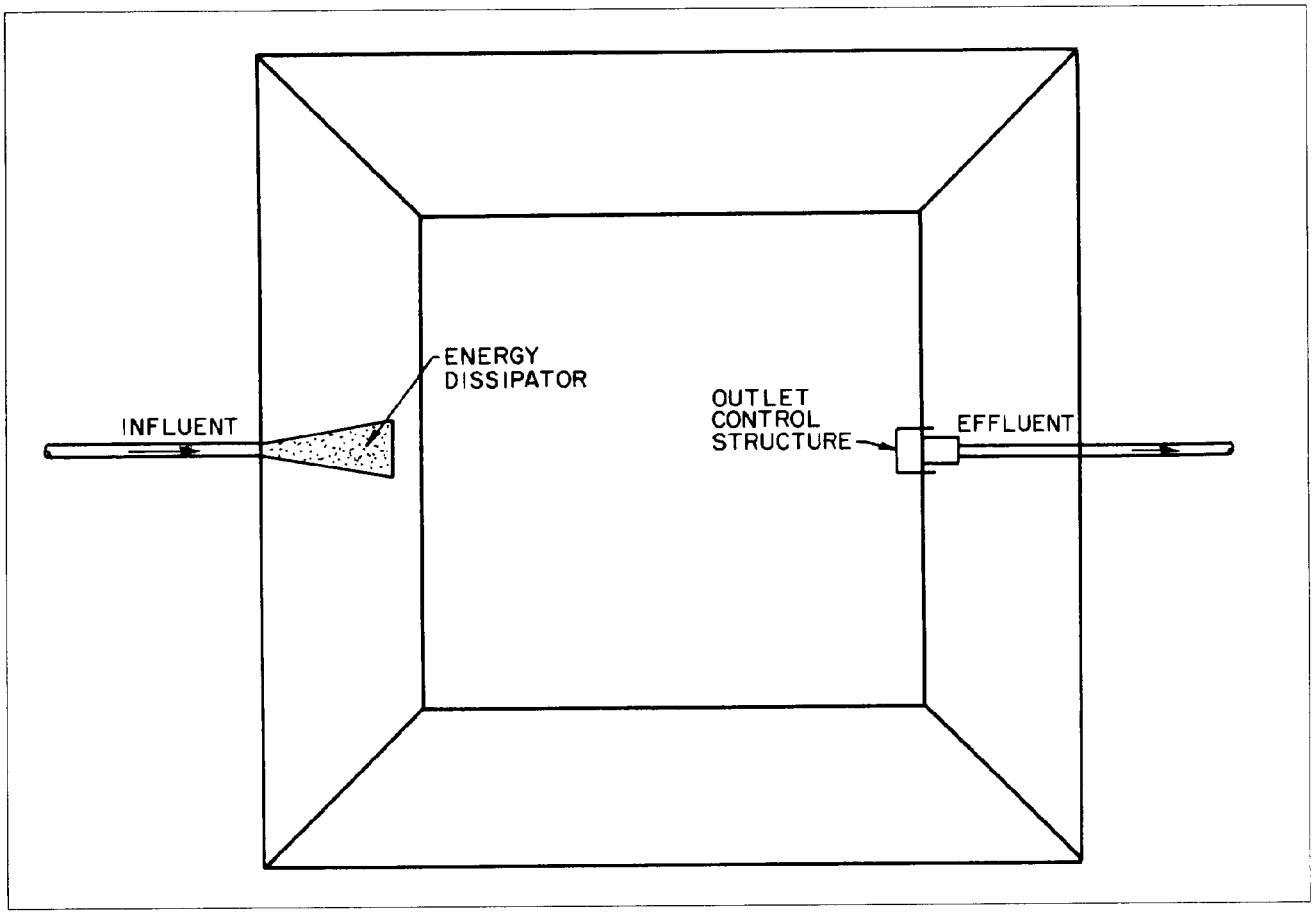

Figure 6–11. Example equalization basin—plan view.

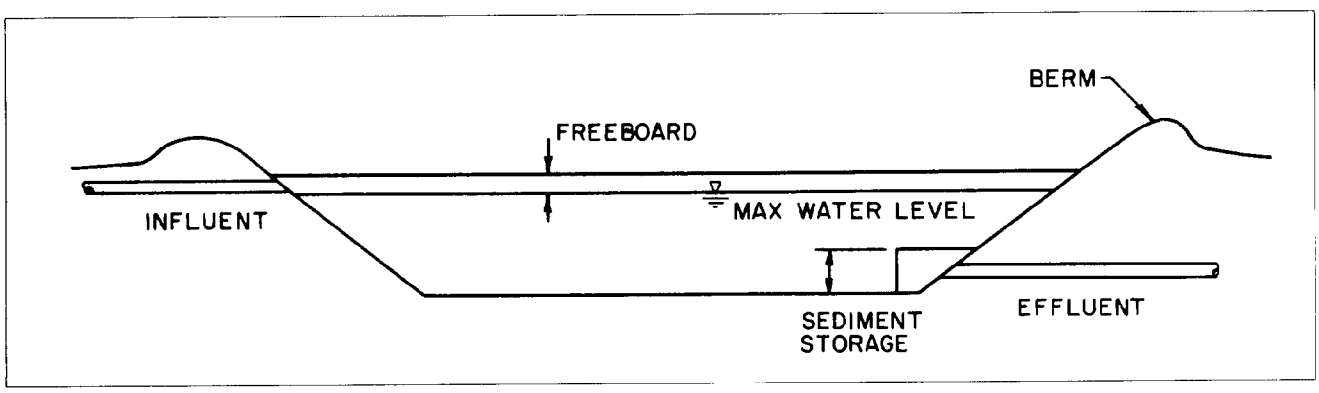

Figure 6–12. Equalization basin—cross section.

volume of water from the sediment basin, the number and capacity of intermittent sand filters, the frequency of dosing the filters, and the volume of sediment expected to collect between cleanouts. The designer must ensure that the size of the equalization basin is compatible with the influent volume from the sediment basin and the effluent to the dosing tank or intermittent sand filters. If it is too large, it will not be cost-effective. If the basin is too small, it will ovefflow. An extra 2 to 3 feet (0.6 to 0.9 meter) of freeboard should be included above the maximum loading volume.

(a) *Water volume.* The basin's size should be based on V_{ave}, for a one week wash period or V_{max} for a peak use period, whichever is greater. A safety factor ranging from l.25 to 2.0 times V_{ave} or V_{max} should be incorporated to help insure adequate water volume at all times. The effective depth of the basin should be 5 to 8 feet (1.5 to 2.4

meters). Deeper basins should be considered in arid regions to reduce water surface areas, thereby minimizing evaporation.

(b) *Sediment volume.* A depth of from 1 to 2 feet (0.3 to 0.6 meter) should *be* allowed for sediment storage at the bottom of the basin and this volume added to the water storage requirements.

(c) *Dead storage volume.* A depth of 2 to 4 feet (0.6 to 1.2 meter) should be allowed directly above the sediment volume for dead storage. This additional volume allows for submergence of the basin effluent control structure and provides a minimum water volume to optimize settling.

(3) *Influent structure.* A concrete trough should be installed at the inlet to prevent liner erosion. The inlet pipe should he higher than the maximum water elevation in the basin to allow free discharge of wastewater. If the wastewater Influent line were submerged, sediment could collect and eventually clog the line.

(4) *Effluent control structure.* The effluent structure should be located opposite the Influent structure thereby maximizing the water detention time in the basin. If cohesive soils are present, float supported baffles may be required to increase the detention time and minimize short circuiting of wastewater in the basin. Stormwater diversion prior to treatment should be considered as standard procedure only if the CVWFis in a shutdown mode. This diversion should be in operation after each day's shutdown and when it is expected that the facility will not be in use for long periods of time, such as during winter.

(5) *Construction.* In-ground equalization basins are designed and constructed with water-tight walls and bottom. Several liner materials, or combinations, can be considered for water-tight construction. However, local experience with earthen basins may suggest that no lining is needed. In-ground basins should be designed and constructed in accordance with and with approval by the state regulatory authority in which the facility is located. The most cost effective, environmentally acceptable basin construction should be provided.

(a) *Concrete.* A concrete liner is permanent and can resist freeze/thaw cycles. If a concrete lined basin is used, the foundation must support the weight of the structure, concrete, sediment, and water at maximum depth. Concrete can crack and deteriorate and can be relatively expensive to install and repair compared with other types of liners. The slope of the walls will depend on the method of construction. Expansion/contraction joints are required and may be difficult to seal tightly.

(b) *Bentonite and natural clay.* A bentonite or natural clay liner can be installed only over certain soils. Noncohesive soils that contain large amounts of fines without coarse lenses (sands and gravels) are susceptible to movement which can cause leakage in bentonite and clay liners. A site without shallow bedrock and without a perched water table is desirable for installing these types of liners. When these materials are used, the slope of the walls will vary, depending on local conditions such as the soil's angle of repose. Sediment removal equipment could damage a bentonite liner, since movement of the bentonite can cause leakage. Therefore, a concrete ramp and floor must be installed to provide access for removing the sediment. Leaks may occur at each point where the bentonite and concrete interface. The inlet must have an energy dissipator such as a concrete trough with rocks to prevent erosion of the bentonite walls. Bentonite-treated basins must be protected from stormwater erosion to maintain their integrity.

(c) *Synthetic materials.* Various types of synthetic rolled material can be used to line the equalization basin. A synthetic liner is installed in the same way that a landfill is lined. A proper base is prepared and the liner is positioned, then covered with soil. Equipment can move over the bottom of the basin if the soil covering the liner is thick enough to protect it, a proper base is under the liner, and the walls are not sloped too steeply. A concrete ramp and floor can be installed in the basin before the rolled material is placed. A concrete trough must be used to channel the Influent over rocks and other obstacles to dissipate the energy of the falling water. If a synthetic liner material is selected, it should be resistant to petroleum products and sunlight such as high density polyethylene (HDPE).

(d) Asphalt. Asphalt also can be used as a basin liner. However, it should he noted that petroleum-based products, solvents, lubricants, and other fluids used in vehicle operations and cleaning can degrade an asphalt liner. These products destroy the binder material in the asphalt and cause the liner to fail. The designer should he aware of this potential problem before using asphalt as a liner.

(6) *Sediment removal.* The equalization basin design should include means for dewatering and gaining access to the basin. Basins should be designed for infrequent sediment removal in the range of from 10 to 20 years based on estimated solids carryover from the sediment basin. Sediment storage should he from 1 to 2 feet (0.3 to 0.6 meters). In selecting the liner, designers should consider the method and equipment the facility will use to remove sediment. The liner used should sustain the least damage to its bottom and side walls during cleanout. A ramp with a slope of 1 to 6 (17 percent) may have to be constructed to allow cleaning equipment access to the basin.

b. *Dosing tank (optional).* A dosing tank or device is a storage structure or component located after the equalization basin and before the filters. The purpose of the dosing tank is to discharge settled water to the intermittent sand filters at the desired dosing rate and frequency. The first choice for delivering Influent to the filter surface is by gravity flow; however, if this design is not possible, automatic operation is an important alternative. Automated delivery is done using flow-activated valves, dosing siphons, timer-controlled valves, or pumps. It is suggested that a dosing siphon or electronically triggered valve he provided in the dosing basin in conjunction with the distribution piping. The most economical dosing siphon in sewage systems is the type with proper bypass pipes and valves; however, electronic float-actuated valves with manual override mechanisms are also effective. Both approaches require a minimum elevation differential between equalization basin water level and filter surface. Water flows by gravity from the equalization basin to the filter pump wet well and then is pumped to the filters via a filter valve control box or valve house.

c. *Intermittent sand filters.* Intermittent sand filters provide an economical, effective method of treating water prior to reuse at the wash facility. Filters provide a final polishing step by further reducing residual BOD_5 and suspended solids that maybe in the water. This step renders the water suitable to be pumped and reused for washing. The mechanisms involved in removing suspended solids by filtration are complex. Some straining occurs at the filter surface; however, most solids removal in granular filters of the type used at CVWFs occurs within the pore space of the filter media particles and by absorption of impurities onto the filter media surfaces. Additional straining between media particles in the filter also contributes to overall solids removal. Although the primary purpose of the filters is to remove suspended solids and provide a polishing step prior to recycling, they also are effective in reducing BOD_5, nitrogen compounds, and algal populations through a combination of physical and biological processes without the addition of chemicals. The effluent quality from filtration is such that any discharge or reuse is environmentally safe and will cause no increased pump wear. Adequate product water is achieved with minimal O&M costs and personnel. This type sand filter does not require backwashing.

(1) *Configuration* The surface of an intermittent sand filter may he divided into two, three, or four cells. The cells may share a common underdrain collection system, but will have separate distribution systems. Each cell should be physically separated by surface partitions to prevent wastewater from spilling over from one cell to another. At the designers option, the partitions may also completely separate the 36-inch (0.9 meter) sand layer between cells; a minimum of 12-inch (0.3 meter) penetration is recommended.

(2) *Siting.* Intermittent sand filters can require large areas. Therefore, the most desirable topographic and location criteria would include a level site that is free of trees, woody vegetation, and rock; a deep groundwater table; good natural drainage away from the filters; and proximity to the main pump station and water supply basin. Open filters should he located away from or protected against windblown dust from unpaved tank trails. Site conditions may require windbreaks such as fences, trees, or shrubs to prevent wind erosion of the filter media and/or prevent dust from settling on the filter surface. It is desirable that the site be high enough above the maximum water elevation in the water supply basin to allow for gravity flow into the water supply basin.

(3) *Sizing.* The size of these filters and their pumping system is determined by three factors: daily dosing rate, dosing frequency, and dosing rate.

(a) *Daily dosing rate.* This rate is the maximum wastewater volume per day

per unit area (in acres) which is applied to the surface of the filter. The application rate shall be from 490,000 and 980,000 gallons per acre per day (524 and 1048 liters per square meter per day), which is the equivalent to flooding the filter to a depth from 6 to 12 inches (15.2 to 30.4 centimeters) every 8 hours. The daily dosing rate of the filter currently is chosen according to soil conditions. Soil type (S_t) for the installation (chap 3) should he used in evaluating the design loading rate. CVWFs serving installations with mainly sandy soil (S_t=1) and little or no suspended clay in the training areas may be designed at higher loading rates. However, since some clay-type soils (S_t=5) occur at most installations, design should he adjusted toward the lower end of the recommended loading rate.

(b) *Dosing frequency.* The daily dosing volume is applied to the filters in three intervals to maintain wetness of the filter and also allow the filter to "breathe" between doses, thus maintaining the aerobic biological treatment which results from intermittent dosing. Normally, a filter will have more than one cell and each cell must be dosed every 8 hours, but the actual dosing interval may he alternated from cell to cell. A dosing sequence using equal dosing per day per filter to he delivered by an automatic dosing device or pumps is recommended. Using the available filters on an alternating basis, with rest periods between doses, effectively reduces the hydraulic dosing rate. This procedure is achieved by using electronic timers to control the application of wastewater to the filters.

(c) *Dosing rate.* This value is the flow rate to the filter during each of the three dosing intervals. Dosing flow to the filter should be 95 to 190 gpm per 1000 square feet of filter surface area (6 to 8 inches [15.2 to 20.3 centimeters]) applied for 20 to 40 minutes to give the desired daily loading rate.

(d) *Filter surface area.* The total filter surface area is calculated by dividing the average weekly flow by the daily loading rate x 7 as the filter can be designed to operate 7 days per week unattended. The total filter surface area is then divided into two or more filter cells. This design minimizes the size of the wastewater distribution network on the filter surface and lowers the effect of taking one filter cell off-line for servicing. Because the distribution lines must be easily removable for servicing the filter surface, it is useful to limit their length and size. Small filters also minimize pump capacity and velocity of flow through the distribution systems. Cell sizes of approximately 1/4 acre (1012 m^2) are desirable; however, they may be larger.

(e) *Example Sizing.* Assume that a CVWF requires an average weekly wash water flow of 1.6 million gallons per day for 5 days/week; soiling conditions indicates a loading rate of 650,000 gallons/acre/ day.

Then, total filter surface area = 1,600,000 gpd x 5 days/ 650,000 gal/day/acre x 7 days = 1.76 acres

Further assume that two filters will be used, each divided into four cells:

Cell size = 1.76 acres/2 filters x 4 cells/filter
= 0.22 acres/cell

Dosing frequency: one of the eight cells is dosed every hour.

Volume per filter dose=8,000,000gal/21 doses= 380,950-gal dose.

Volume of dose per filter cell = 380,950 gal/8cells = 47,620gal.

Dosing rate = 150 gpm/1000 square feet x 0.22 acre (9,583 square feet) = 1438 gpm.

Pumping time to dose each cell = 47,620 gal/I 438 gpm = 33 min.

(4) *Distribution system.* The designer may choose one of several distribution systems to apply waste water evenly over the surface of the sand. Whichever system is chosen, the designer must ensure that it will be easy to remove and replace for cleaning. One design uses perforated plastic pipes placed on the surface of the sand in a grid pattern (fig 6-l3). The drilled orifices in the pipes should be at least 0.16 inch (4 millimeters) in diameter or larger to prevent the openings from clogging. The pipes must be sized to distribute the water as evenly as possible. Another distribution system uses wooden troughs placed on the surface of the filter (fig 6-14) and positioned so as to apply water to the

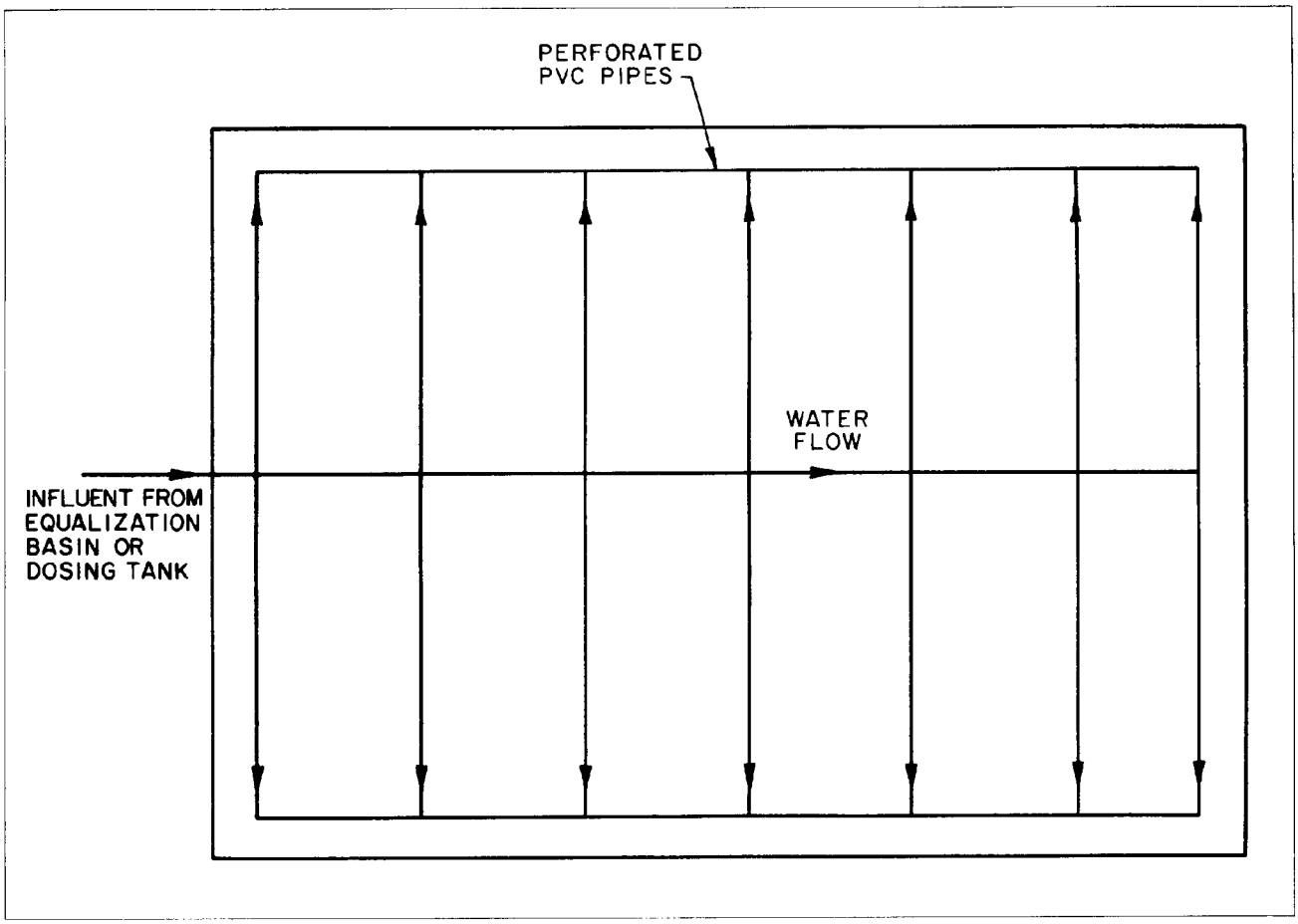

Figure 6-13. Distribution system using grid arrangement.

surface of the filters as evenly as possible (fig 6-15). The number of distribution troughs needed will depend on the area of the filters and the volume of water to be filtered. Plastic pipes with drainage holes may have to he installed in the troughs to extend the distribution system and apply the water uniformly over the surface. The holes in the pipes should be the same size as those in the grid system. The filter distribution system used should he capable of being disassembled when maintenance of the filters is required and the supply pipe to the distributors should he buried.

(5) *Underdrain system.* Perforated collection pipes for the filters are installed near the bottom of the filter embedded in gravel just above an impervious layer. Water will percolate downward through the sand and collect in the pipes (fig 6-16). These underdrains should be placed on a minimal grade (less than 0.25 percent) to provide gravity flow. The designer must consider the surface area of the filters and design the collection system to also handle stormwater falling on the filter

(6) *Materials.* Local sands and gravels should he used whenever possible. The material may have to be washed and screened to obtain clean and properly sized aggregate. The top 36 inches (0.9 meter) of the filter should contain sand with less than 1 percent of the fines passing the number 200 sieve. The D_{10} should be between 0.2 and 0.4 millimeters with a uniformity coefficient $(D_{60}/D_{10})^1$ of less than 3.5. The next layer contains 4 inches (10.2 centimeters) of 0.5-inch (1.3-centimeter) aggregate. The next layer is 3-inches (7.6- centimeter) of 1-inch (2.5-centimeter) aggregate. The bottom layer consists of 11 inches (27.9 centimeters) of aggregate ranging in size from 1.5- to 2.0-inch (3.8-to 5.1-centimeter). The depth of the bottom layer should be measured from the bottom of the lowest collection pipe. The bottom and walls of the filter must be relatively impervious. Liners of clay soil or geotextile membranes should be provided similar to those described for the earthen basins (para 6-26). Figure 6-17 shows an intermittent sand filter in cross section.

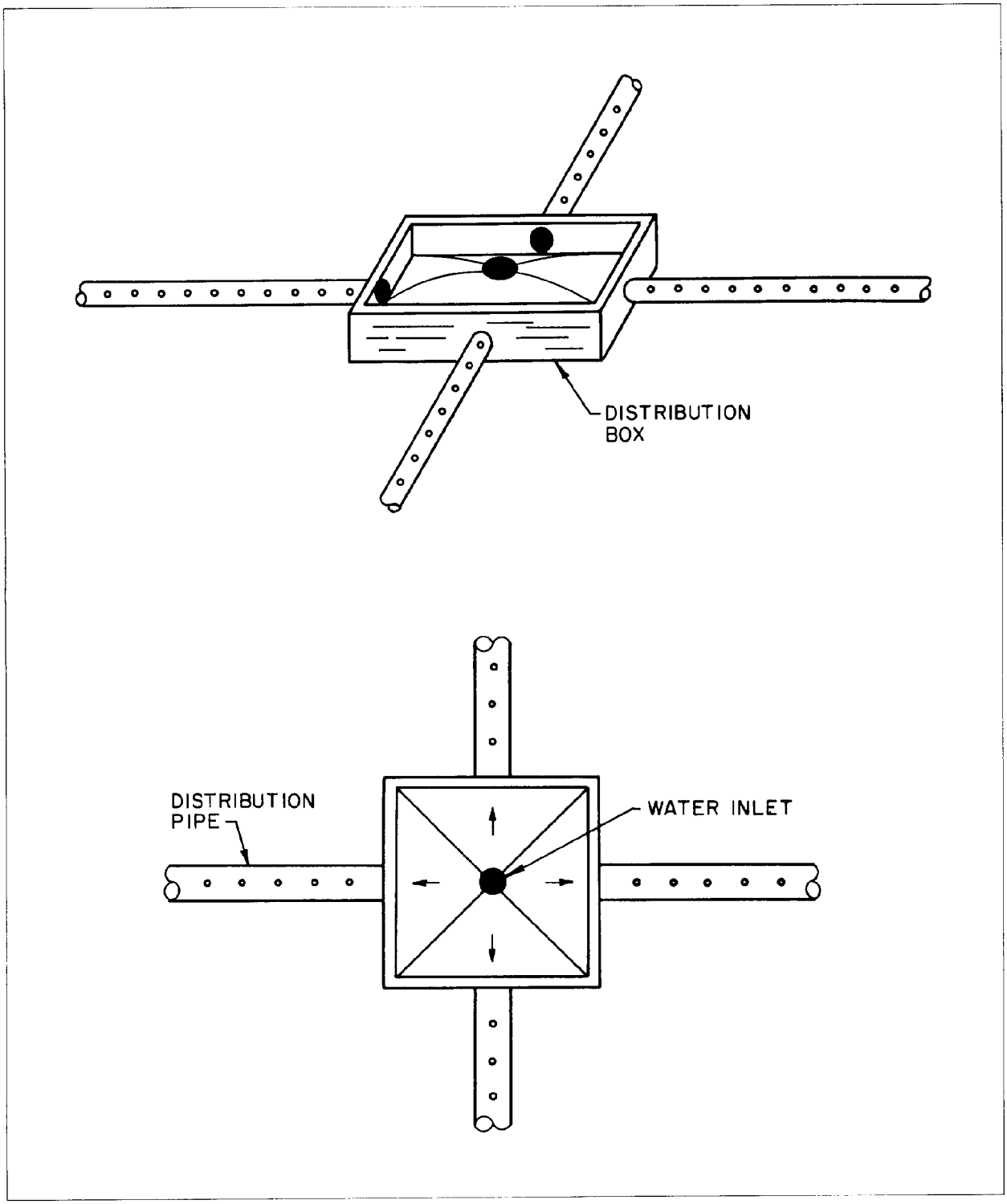

Figure 6–14. Distribution box.

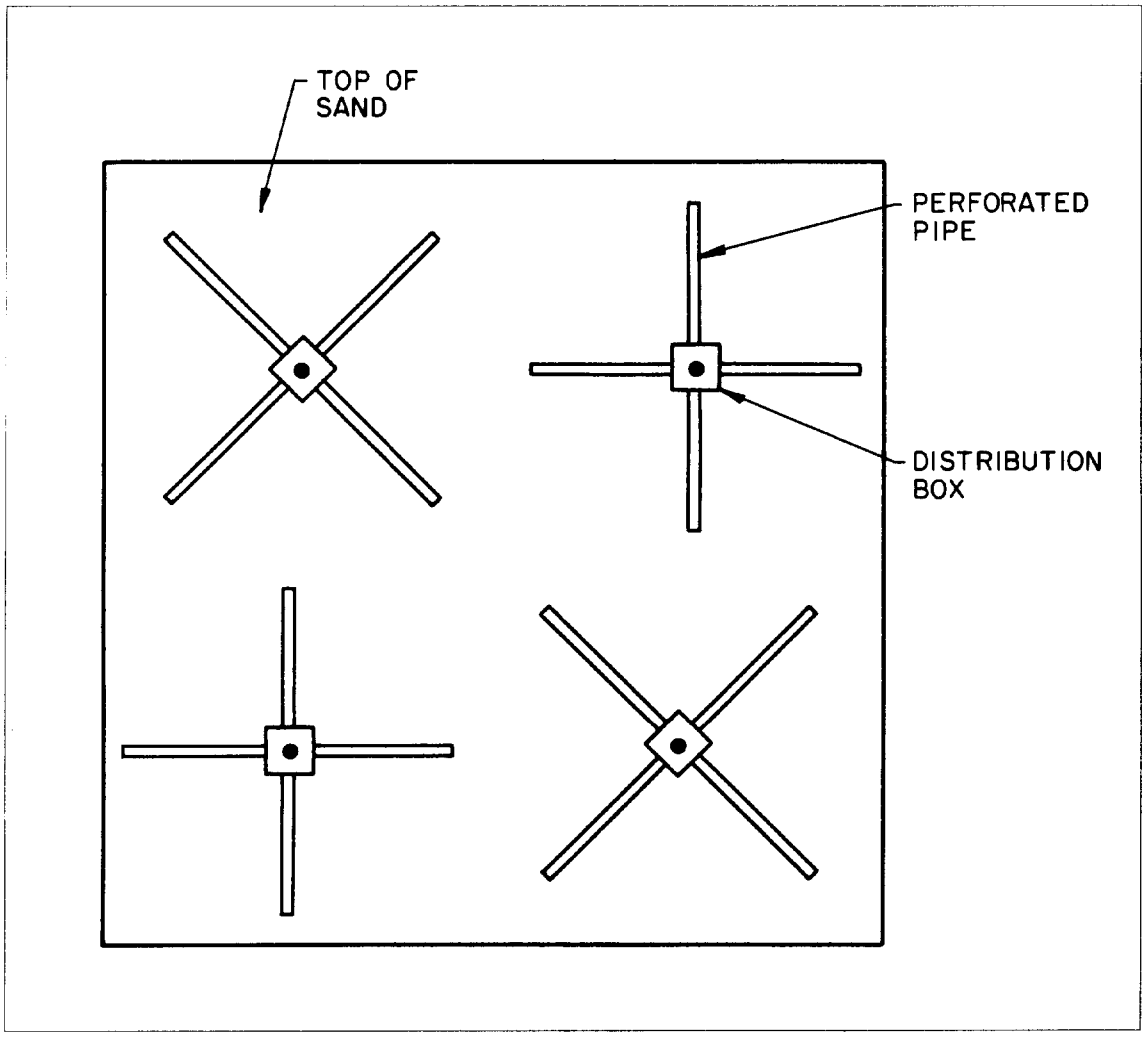

Figure 6–15. Distribution system using distribution boxes.

(7) *Filter maintenance considerations.* The filter sand and the filtered matter support the growth of weeds and grass. Weed control is not required since low grasses and weeds can protect the surface sand from direct sun rays. This shades the sand and reduces evaporation. However, trees and other plants with root systems that could clog or otherwise interfere with the filtering process should be removed.

(a) Winter operations are mostly similar to those during warm weather except that cleaning the filters during cold weather is more difficult. Cold season filtering should be started with a clean, raked filter surface. If the CVWF (and therefore the filters) will not be used during freezing months, the distribution piping including header, distribution main, and laterals must be designed to be fully drained to prevent damage due to freezing. The underdrain network must also be designed to be fully drained or to prevent water from collecting in the filter and underdrain to a depth at which freezing damage can occur.

(b) Where wind-blown dust and dirt could be transported to the filters from unpaved tank trails or erosion-prone areas, natural or artificial screens may be considered.

(c) When a filter is observed to be plugged or approaching a plugged condition, it will be necessary to rejuvenate the filter surface. Two approaches are recommended. The first consists of raking the media surface to remove debris and breaking the surface incrustation that results from the drying of fines and debris. The filter is raked manually with a garden rake or a small tractor rake or disk attachment. When raking no longer appears to rejuvenate the filter surface due to the buildup of filtered

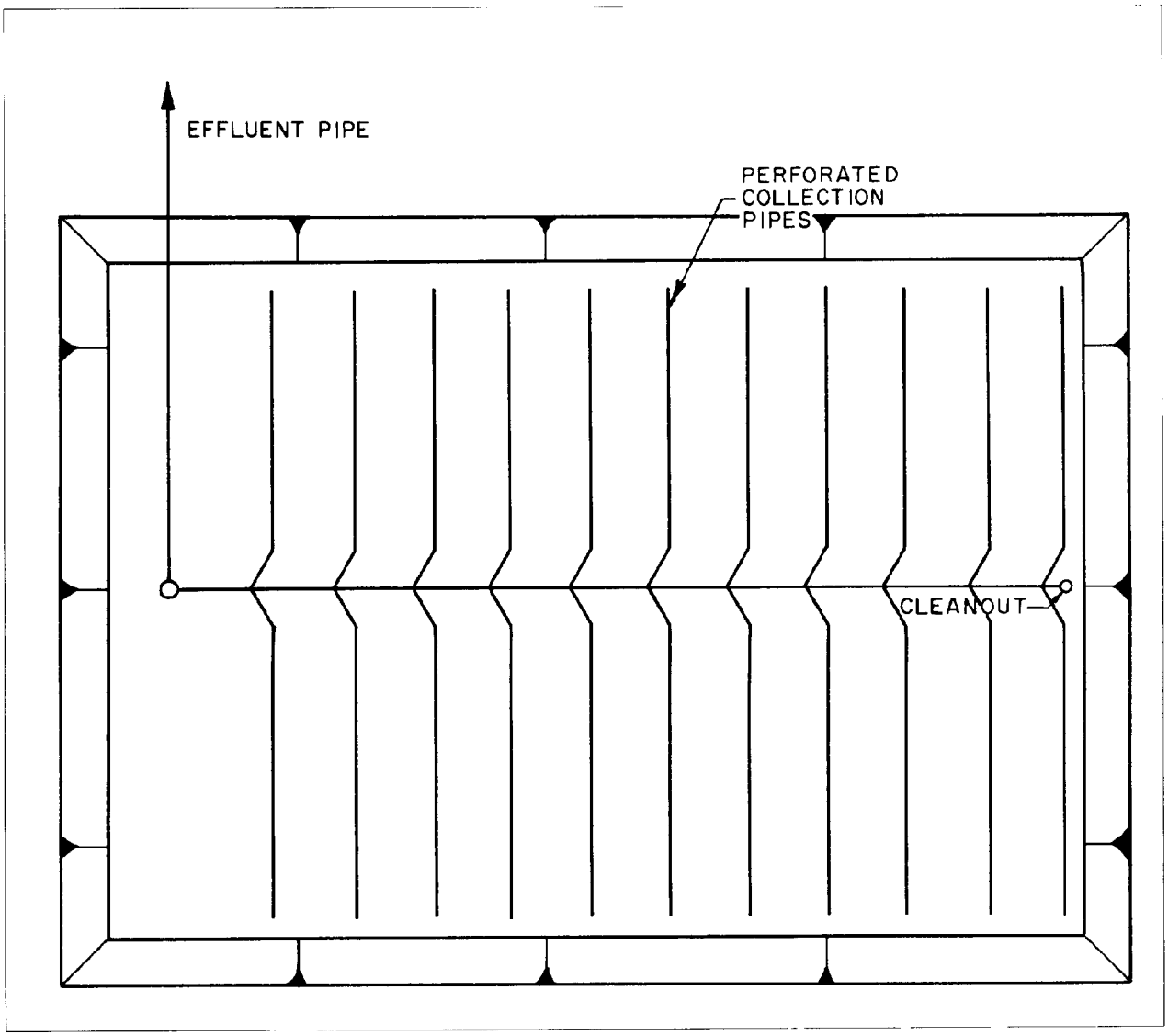

Figure 6–16. Collection system.

matter in the top layer of the sand media, then it is necessary to remove and replace the solids-laden layer. The sand is removed manually or with mechanical devices. A four-wheel-drive garden tractor equipped with a hydraulically operated scraper, bucket loading device, and either flotation-type or dual rear tires works well. The decision to discard or reuse the spent filter sand will largely depend on local availability of this material. When sand costs are high, the removed sand should be stockpiled, washed, and recycled. This approach is especially attractive in wet climates. It is also possible that filter effluent could be used to clean the sand.

(d) The designer must consider the above maintenance aspects of intermittent sand filters and include in the design measures for access, cleaning equipment, intermittent sand filter layers, distribution piping design and ease of removal, and freeze protection.

(8) *Monitoring.* The effluent stream should be monitored for quantity and quality at a point between the intermittent sand filters and the water supply basin. If the water quality meets the standards of the regulatory agency, it is allowed to flow into the wash water supply basin. Otherwise, it is rerouted to the equalization basin for further treatment. The effluent also should be tested periodically for grease, oil, BOD_5, COD, hydrogen-ion

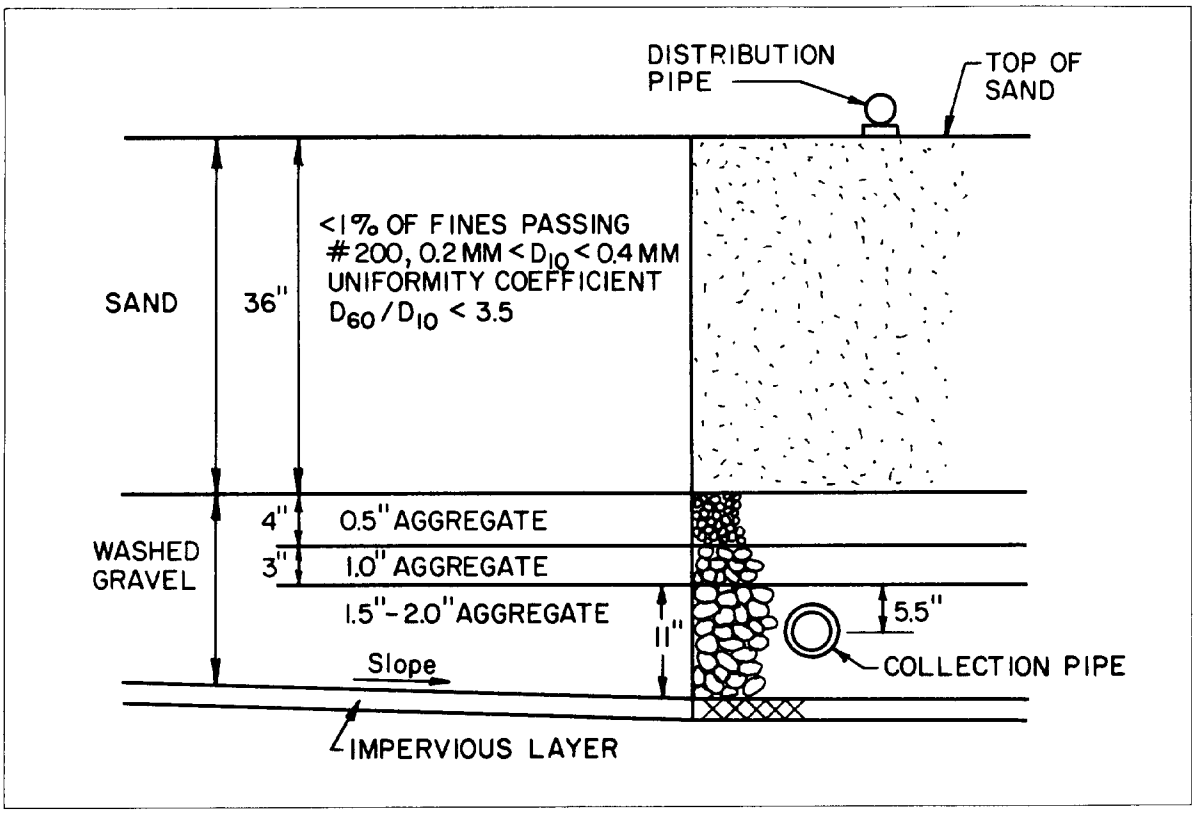

Figure 6–17. Intermittent sand filter cross section.

concentration (pH), total dissolved solids (TDS), and suspended solids (SS) levels.

(a) A recycle system should be monitored at least weekly for the first year of operation. This time span will give the installation a good profile of the treatment system's operation. After the first year, the system may need to be monitored once per month or every other month. These data should be compared with the initial profile data to confirm that the system is working properly.

(b) If primary treated and equalized water is discharged to a sewage treatment plant, the system should be monitored weekly for the first 3 to 4 months to assure the plant operator that the biological, solids, oils, or hydraulic load being discharged from the wash facility are in compliance.

(c) A system that discharges to the environment will require permitting in accordance with the state regulatory agency. The agency must be consulted to determine the monitoring frequency required. Measurements and laboratory tests should he performed in accordance with the instructions in Standard Methods for the Examination of Water and Wastewater.

6-27. Lagoon system

Using lagoons as a secondary treatment system for wastewaters from a CVWF is not the recommended standard. The use of lagoons instead of intermittent sand filters requires Office of the Chief of Engineers (OCE) approval prior to programming and design. Lagoons can be used for secondary treatment only if ponds exist in the vicinity of the CVWF and they are environmentally, hydraulically and structurally acceptable; and if they are more cost effective than sand filters; and long term settling test confirm the ability of lagoons to produce acceptable water quality. However, past designs have used the lagoon treatment system for secondary treatment at CVWFs as described below.

a. *Description.* A lagoon system, like an intermittent sand filter system, includes a sediment basin for sediment and free oil removal (fig 6-18). If the wastewater is to be recycled, an equalization basin and wash water supply basin are also required. The polishing lagoon is sized to give a minimum of 14 days detention time for the wastewaters after pre-treatment. This minimum detention time is calculated at peak hydraulic flow conditions into the lagoon. Sediment storage within the lagoon must be provided for the design life of the lagoon. This storage volume is calculated by multiplying the

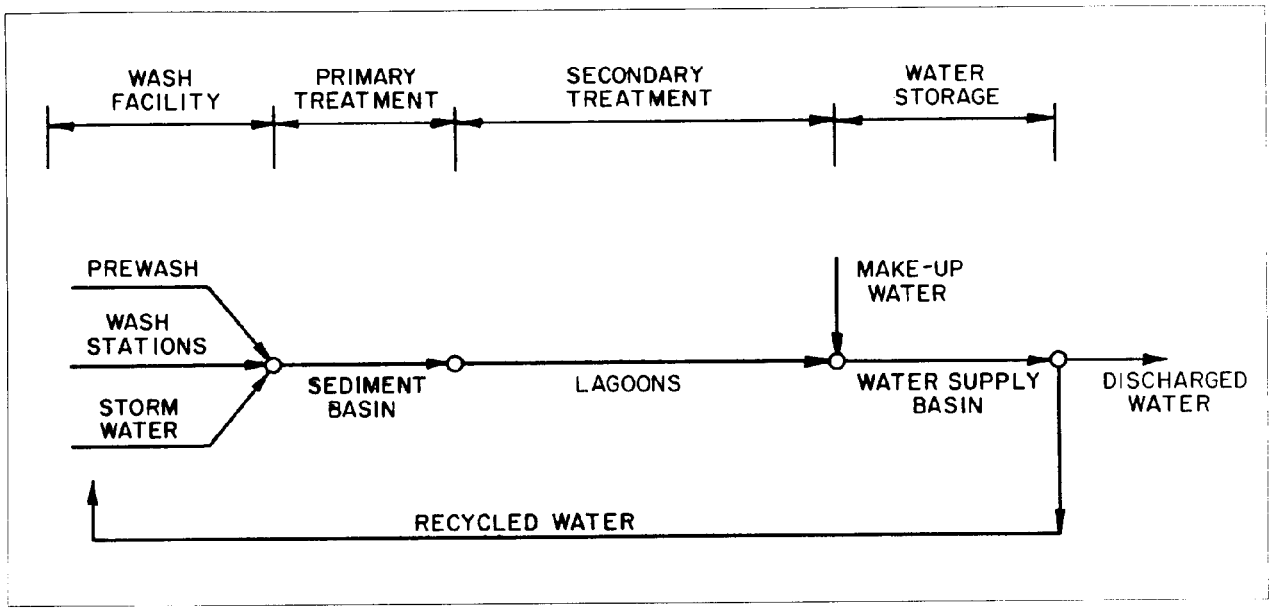

Figure 6–18. Components of a lagoon system.

anticipated flow by the sediment load in the flow by the design life. Figure 6-19 shows the basic lagoon arrangement.

b. *Components.*

(1) *Influent structure.* The influent structure is located and designed so that it is not submerged.

(2) *Effluent structure.* The effluent structure is designed to prevent the overflow residual floating oils and solids.

(3) *Liner.* Liner performance should be resistant to the action of petroleum products.

(4) *Oil removal.* Continuous oil removal in the lagoon is not required.

(5) *Stormwater.* Stormwater capacity is designed into the lagoon based on rainfall for the site. It should be assumed that washing operations at the CVWF can occur during a design storm event.

(6) *Waste discharge (recycle only).* The lagoon should have the capability of discharging *50* percent of its capacity to control dissolved solids that will have accumulated in the wash water. This amount can be reduced to 30 percent in areas where the rainfall meets or exceeds the evaporation rate. The lagoon should be monitored for dissolved solids each month of operation.

(7) *Maintenance.* The lagoon should be monitored for deterioration of water quality and for leakage.

6-28. Discharge system

A total discharge treatment system removes dirt and debris from the wastewater before discharging the entire volume to a secondary treatment system, usually a sewage treatment plant. Figure 6-20 shows the unit process in a discharge system, and figure 6-21 is a schematic depicting the treatment sequence. Primary treatment is required to remove free oils and prevent sediment deposition in the conveyances and causing a blockage. This treatment also prevents large volumes of sediment and oil slugs from entering a sewage treatment plant which is usually not designed to handle this type of waste. If it is not feasible or practical to discharge the wastewater to a sanitary sewer system, the water may have to be discharged to stormwater surface drainage channels or storm sewers. If one of these methods is used, the water must be treated to produce an effluent quality complying with the installation's National Pollutant Discharge Elimination System (NPDES) permit since this type of discharge is classed as a point source. The discharges must be regularly monitored and reported.

a. *Equalization basin.* An equalization basin may be required if the sewer lines or plant cannot accept the total instantaneous volume of pretreated wastewater. If the water volume is to be introduced slowly to the discharge location, an equalization basin should be constructed to hold wastewater until it is discharged. The basin should be designed as previously described.

b. *Water supply basin.* A water supply basin may be required in a non-recycle system if the wash demand exceeds the available source of supply. This should be planned, designed and constructed as previously described.

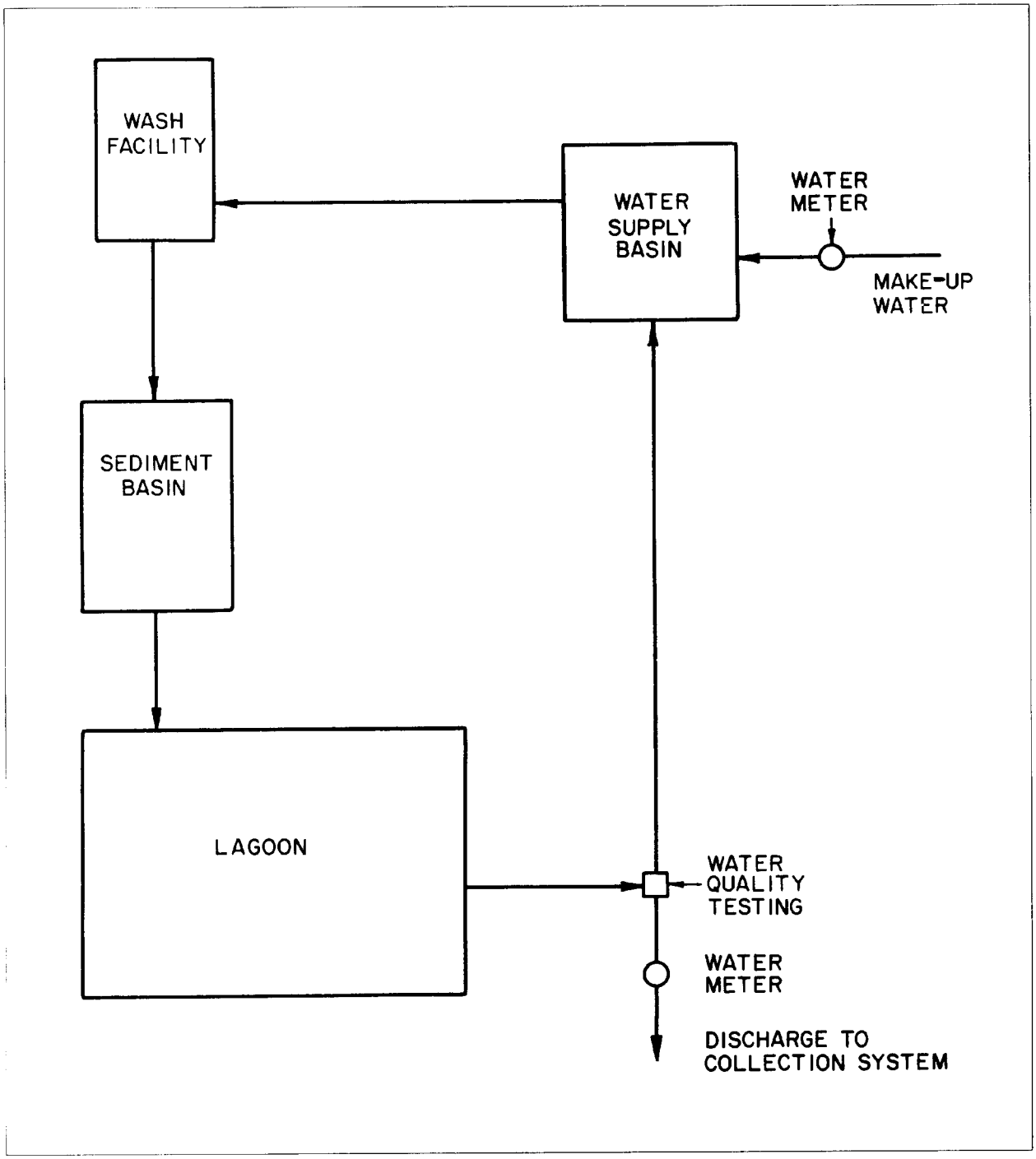

Figure 6–19. General flow schematic of a lagoon system.

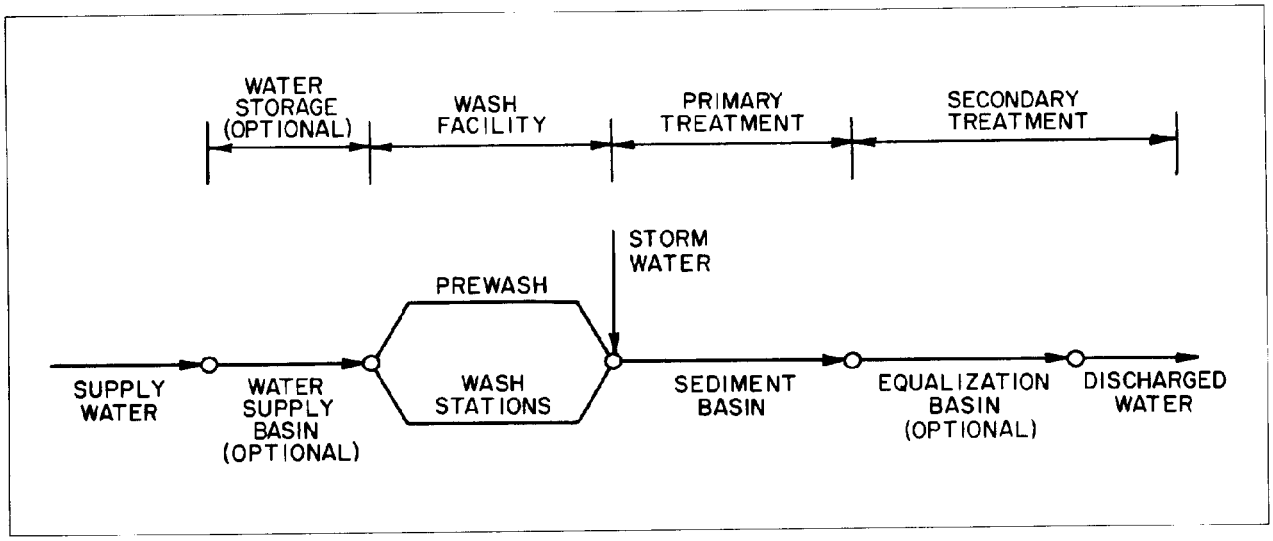

Figure 6–20. Components of a total discharge system.

Section V. WATER SUPPLY BASIN

6-29. Introduction

Filtered water from the secondary treatment facility (sand filter or lagoon) flows by gravity into the wash water supply basin. This is a lined basin which stores the filtered wash water supply for the vehicle wash area. Maximum and minimum operating levels are monitored by level sensors in the wash water pumping station. The basin is sized to store, at a minimum, the quantity of water required to wash the maximum number of vehicles for which the facility is designed during the design wash period. Makeup water for the CVWF is added into the water supply basin. If necessary, excess water can be discharged from this basin; however, the basin should be sized to hold the water demand volume plus storm water from a one-hour duration 10-year storm event.

6-30. Capacity

The effective water volume of the basin should be based on V_{ave} for a one week wash period or V_{max} for a peak use period, whichever is greater. A safety factor ranging from 1.25 to 2.0 times V_{ave} or V_{max}, should be incorporated to help insure adequate water volume at all times. The basin should include 3 feet (1.0 meter) of freeboard above the highest water level, including an allowance for stormwater. There is no need to provide for sediment storage in this basin since the water in the basin should not contain sediment. A depth of 2 to 4 feet should be allowed for dead storage at the bottom of the basin. This additional volume allows for submergence of the effluent control structure. Figures 6-22 and 6-23 show different views of a water supply basin. The designer must ensure that the size of the water supply basin is compatible with the influent volume from the secondary treatment or water source and with the effluent volume to the wash facility. If the basin is too small, there will not be enough wash water, but if it is too large, it will not be cost-effective. The effective depth of the water supply basin should be 5 to 8 feet (1.5 to 2.5 meters). Deeper basins should be considered in arid regions to reduce water surface areas, thereby minimizing evaporation.

6-31. Liner

The water supply basin may be lined with concrete, clay, or a synthetic material, if required, such as those described for the equalization basin (para 6-26 above). In areas with high evaporation rates, light-colored basin liners might be considered to lower solar heat gain and decrease the evaporation rate.

6-32. Influent structure

An energy dissipation device or treatment should be installed at the inlet to dissipate the energy of the influent water and prevent liner erosion. The inlet should be close to the maximum water elevation in the basin to prevent water from backing up into the pipe and surcharging the sand filter drain system.

6-33. Service

There should be little, if any, solids deposition in this basin, so there is no need for a ramped service entrance into it. There should also be no oil in this basin, so no oil removal equipment is needed.

6-34. Security

Fences may have to installed around the basin to prevent animals from entering the area to drink or bathe.

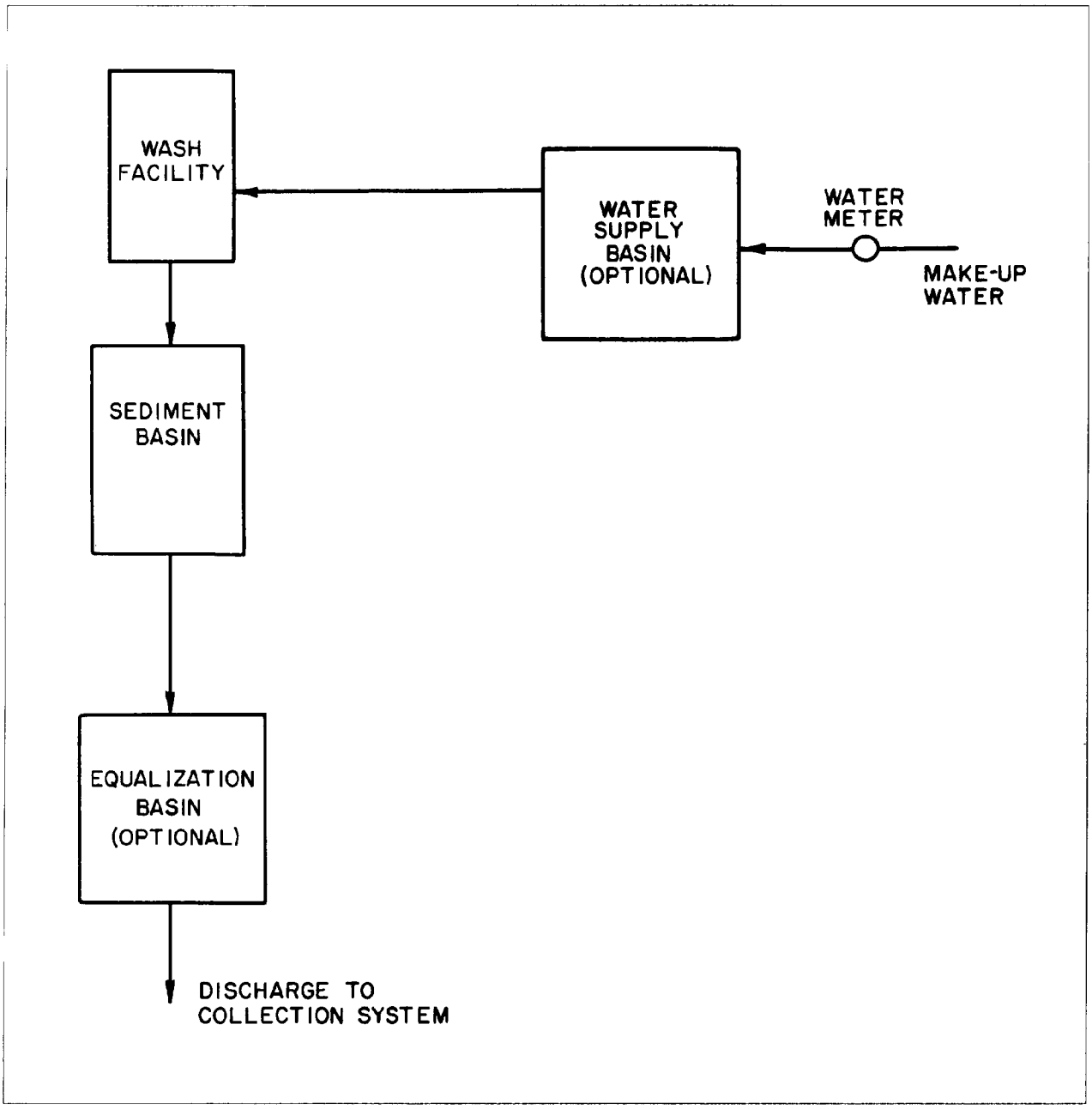

Figure 6–21. General flow schematic of a total discharge system.

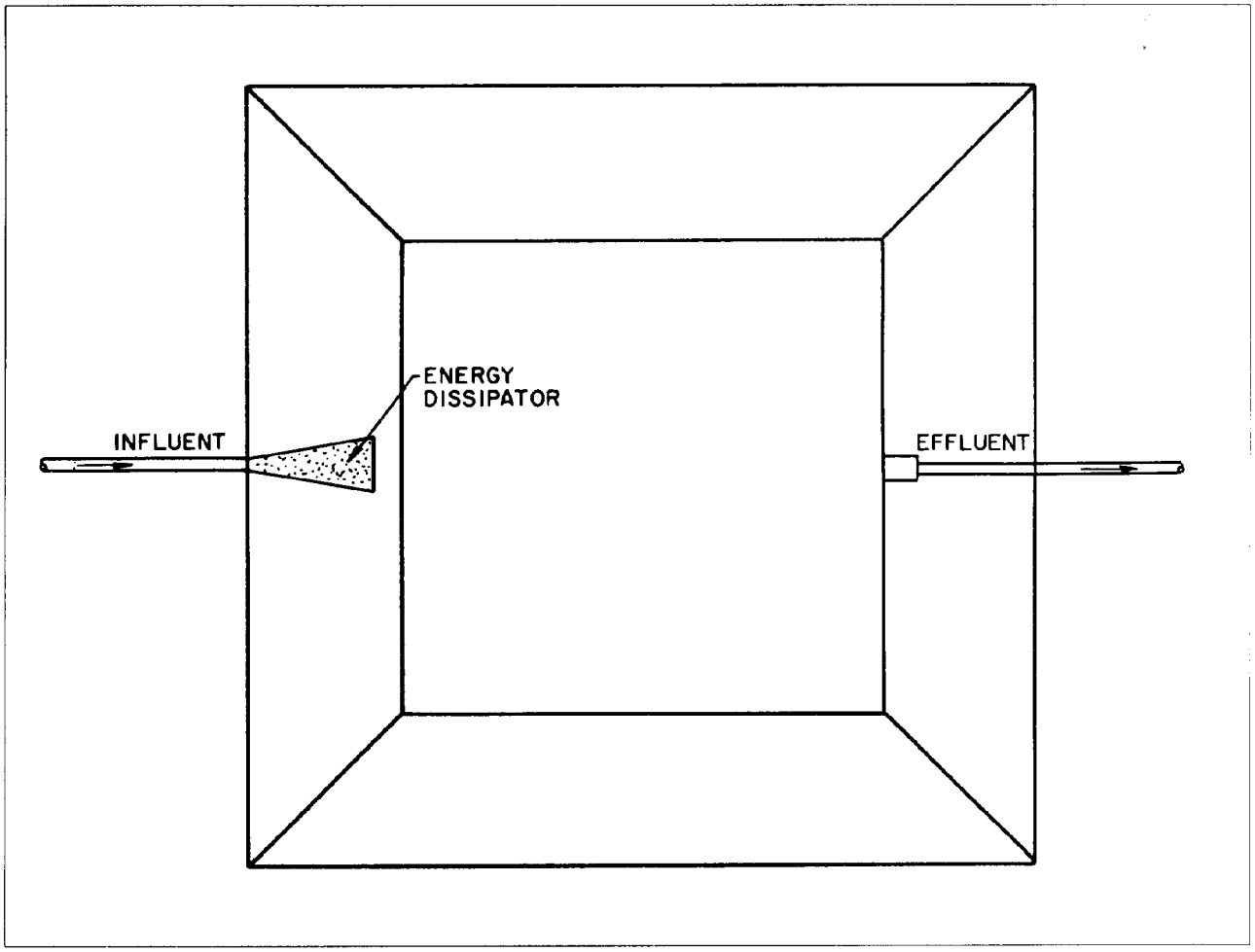

Figure 6–22. Water supply basin—plan view.

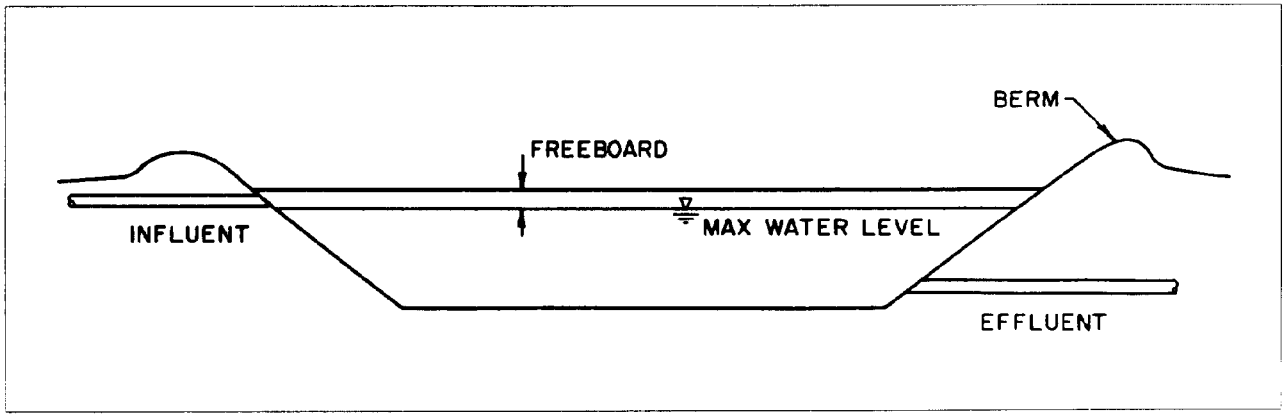

Figure 6–23. Water supply basin—cross section.

Section VI. OTHER TREATMENT SYSTEM COMPONENTS

6-35. Water source

All treatment Systems will require a reliable water source for charging the CVWF initially for make-up, regardless of the form of secondary treatment. The volume of water required will depend on the type of wash facility constructed, type and configuration of the treatment system, frequency of use, losses, and the local climate. If a recycle system is provided, the designer must determine the most feasible and economical method of filling the system initially and then maintaining the water level in the system by adding makeup water from the water source. Makeup water will be required to restore the system to a working level as water to carried off by the vehicles or lost to evaporation and overspray. All original source and makeup water should be added at the water supply basin, if provided. This water should be uncontaminated, reasonably clean, and should not require treatment before being introduced into the system. All sources of water available at the installation should be considered for use, singly or in combination, as sources of water at a CVWF including dedicated wells, surface water, tapping into the existing potable water supply or captured rainwater.

a. *Type of facility.* A wash facility that has a prewash will require more makeup water than a facility with only wash stations because of increased water lost by vehicle carry-off, overspray, and evaporation. Water losses from carry-off can be as high as 160 gallons per vehicle. Losses due to overspray and evaporation can be as high as 10% from water cannons and 5% from hoses at wash stations.

b. *Type and configuration of treatment system.* The type and configuration of the treatment system is another factor to consider when estimating the volume of makeup water required. A discharge system will require that the total water demand including makeup be taken from the developed water source. In a recycle system, only the water lost to overspray, evaporation and vehicle carry-off will need to be replaced from the water source. Treatment systems with basins that have large surface areas may have greater water losses due to evaporation than basins with smaller surface areas. This loss will increase the volume of makeup water required, as discussed below.

c. *Climate.* The evaporation rate at the installation must be considered when calculating the volume of make-up water needed to maintain the total demand. The volume of rainfall at the installation as well as the amount lost to evaporation should be calculated to determine the volume of water needed from the water source. Water balance computations should be performed by the designer to assure adequate supplies of water throughout the entire washing season.

6-36. Piping

Wastewater should be conveyed by gravity whenever possible for economy. Pumping should be avoided because residual oils may become emulsified and difficult to remove, solids cause wear on pumps and pumps add significant capital and operating cost to the facility. Conveyances, whether gravity sewers or open channel, must be constructed to grades which will provide adequate scouring velocity to prevent solids deposition. All pipes must be designed for peak hydraulic and solids loadings, including that contribution from storm water runoff from hardstands. Open-channel flow should be used whenever possible for ease of maintenance. If siting problems or severe slopes make open-channel flow impractical, the designer should use large-diameter pipes. Locate manholes at each change in slope or direction and at each pipe intersection. Design long, straight sections of conduit to minimize the number of manholes required. All frequently operated, buried valves should be accessible through pits or manholes.