CHAPTER 6

UNINTERRUPTIBLE POWER SUPPLY SYSTEMS

6-1. Description of uninterruptible power supply (UPS) system

The following is a sample uninterruptible power supply (UPS) system with associated one-line and wiring diagrams for use as a guide for implementing the test procedures described in the preceding chapters of this manual.

a. Figure description. The uninterruptible power supply system consists of the following equipment: 480V utility feeder breaker, 480V generator feeder breaker, 480V transfer switch, 200 kVA redundant UPS, 125 Vdc NiCad battery and a 208/120V UPS switchboard panel. The 200 kVA UPS consists of the following equipment: 480V incoming breaker, 125 Vdc rectifier, redundant 120/208 VAC inverters, static switches, bypass switches and miscellaneous breakers. The equipment, accessories, interconnection, ratings, cabling, etc. are shown on figures 6-1 through 6-3. Figure 6-1 is the uninterruptible power system single line diagram on page 6-9. Figure 6-2 shown on page 6-10 is the uninterruptible power system block diagram and figure 6-3 shown on page 6-11 is the uninterruptible power system wiring diagram.

b. Switching. The utility and generator breakers are metal enclosed free standing, manually operated, air power circuit breakers. The breakers have instantaneous, short time, and long time trip settings with manual control and position indication on the door of the breaker compartment. The 480V transfer switch is metal enclosed, break before make, dead bus transfer, automatic on loss of voltage, solenoid operated, and mechanically held complete with microprocessor controls and indication, four pole switch. Transfer time and time delay settings are adjustable. The transfer switch will supply start and stop signals to the back-up diesel generator upon loss of and restoration of utility power. These controls are timed and must be coordinated with the diesel generator manufacturer for start-up, loading, and cool down times. Remote indication, control, alarm, etc. functions are also available.

c. UPS operation. The UPS is a static solid state system with a battery for back-up power. The rectifiers convert ac to dc power for supply to the redundant inverters and for charging the battery. The inverters receive power from either the rectifier or battery, and convert it from dc to ac. The inverters also include power conditioning equipment and circuits to remove harmonics developed in the system. Because the input power is converted from ac to dc to ac, power system disturbances are also removed from the UPS output. This makes UPSs ideal for use with sensitive electronic equipment and computers. The rectifiers and inverters are constructed with power diodes or silicon control rectifiers along with controls and filtering circuitry. The UPS also contains thermal magnetic molded case circuit breakers and two bumpless static switches. The switches will transfer the output of the UPS from one redundant inverter to the other upon failure of the lead inverter. The transfer between the inverters is accomplished with absolutely no loss of continuity of power to the load. In the sample system, as shown in figure 6-1, the two UPS modules are both sized to supply the entire load independent of one another. The 208/120 V switchboard is a metal enclosed, wall-mounted distribution panel with incoming and feeder unadjustable thermal magnetic molded case circuit breakers. The switchboard also receives a backup power supply from the utility power center for use during the maintenance of the UPS through two bypass switches.

d. Battery description. The nickel cadmium (NiCad) batteries are individual 1.2 volt cells in plastic or steel cases with nickel and cadmium plates in a potassium hydroxide solution. The cells are sealed, maintenance free and connected together in series on racks to supply 125 Vdc. The 120/208V UPS switchboard panel contains two main and numerous molded case thermal magnetic circuit breakers to distribute the power. The breakers have instantaneous and overcurrent elements trip characteristics. The

UPS systems provide normal and uninterruptible regulated power to sensitive emergency plant loads, like computers, communications, radar, security systems, lighting, etc.

6-2. Operation of uninterruptible power supply system

The operating modes for the UPS system are as follows:

a. Normal condition. Utility breaker closed, diesel generator not running but in auto mode, diesel generator breaker closed, transfer switch connected to utility, inverter A connected through UPS static switch to UPS bus and UPS switchboard connected to the UPS.

b. Loss of rectifier/battery charger A. UPS incoming breaker feeding rectifier/battery charger A opens, circuit breaker connecting rectifier/battery charger A to battery bus opens and battery fed by rectifier/battery charger B

c. Loss of inverter A. UPS static switch A switches UPS bus to inverter B and Inverter A circuit breaker opens.

d. Loss of utility power. Battery supplies power to UPS bus through inverter A or B, transfer switch supplies start signal to diesel generator, diesel generator starts and ramps up to speed and transfer switch connects to diesel generator.

e. Restoration of utility. Utility power restored, transfer switch switches to utility bus and diesel generator shut down by transfer switch.

6-3. Commissioning test plan for the UPS system

A system verification and functional performance test should be performed on the UPS system. These tests will include installation inspections, individual component testing, testing on wiring, control and interlock functional checks, equipment energization and system operating measurements and functional checks.

6-4. Installation inspections and component testing of the UPS system

As indicated in more detail in chapter 3, the installation of the main components (i.e. utility and generator circuit breakers, transfer switch, UPS, battery, battery charger, and UPS switchboard) will be inspected as follows:

a. Utility and generator circuit breakers. Completeness of assembly, verification of nameplate, sizes and settings against drawings, loose parts and insulation damage, breaker alignment and manual operation (leave circuit breaker open) and bus insulation resistance (if not previously energized). Figure 5-6 (DA Form 7469-R) shows a completed checklist for circuit breakers.

b. Transfer switch. Completeness of assembly, verification of nameplate, sizes and settings against drawings, loose parts and insulation damage, switch alignment and manual operation (leave open), switch insulation resistance (phase-to-phase and phase-to-ground), PT and control fuse size and continuity, ground connection and check timer settings. Figure 6-4 on page 6-12 shows a completed DA Form 7970-R for a transfer switch inspection.

c. UPS. Completeness of assembly, verification of nameplate, sizes and settings against drawings, loose parts and insulation damage, proper settings, control fuse size and continuity, ground connection,

proper neutral connection, proper phase and voltage connections (incoming, battery, inverter A, and inverter B) and manual operation of circuit breakers (leave open). Figure 6-5 shows a completed DA Form 7972-R for the UPS inspection.

d. NiCad battery. Completeness of assembly, verification of nameplate, sizes and connection against drawings, loose parts, leaks, or damage, electrolyte level, vents sealed and plugs installed, grounding and measure voltage. Figure 6-6 on page 6-14 shows a completed DA Form 7973-R for a battery inspection.

e. UPS switchboard. Completeness of assembly, verification of nameplate, sizes and settings against drawings, loose parts and insulation damage, ground connection, proper phase and voltage connections and manual operation of circuit breakers (leave open). Figure 6-7 shows a completed DA Form 7974-R for the switchboard inspection.

f. Cabling. Proper use, voltage, labeling, and connection using drawings, tightness and neatness of termination and power cable insulation resistance (phase-to-phase and phase-to-ground). See figure 4-11 (DA Form 7466-R) for sample of completed checklist.

g. Visual and electrical wiring inspections. The termination of each cable, shown on the cable block and wiring diagrams, should be checked to insure each conductor matches the wiring and schematic diagrams. This is performed by yellowing each connection from the schematic to the wiring diagram; visually inspecting each connection for cable number, wire number/color, and terminal; and checking point-to-point continuity or "ringing out" each wire from end to end including grounds. For example (figure 6-3) Cable BGATS1 from Automatic Transfer Switch to the Backup Generator should be checked to verify that the "black" wire is terminated as follows as shown on the schematic and wiring diagrams:

Equipment	Terminal No.
Automatic Transfer Switch	B1
Backup Generator	T1

As this is done, the wire on each drawing should be colored or highlighted to show its termination has been checked. This process should be completed for all field wiring as a minimum and internal wiring if not previously performed at the factory.

6-5. Energizing and test of the UPS system

The following steps are performed to energize and test the UPS system.

a. Initial energization. Individual components of the UPS system shall be sequentially energized from the source through the loads. As each item is energized, control functions, interlocks, and alarms should be checked for proper operation. Voltage, phasing, and current measurements should be made at each step.

b. Utility breaker. Verify diesel generator breaker open, verify incoming voltage, manually close the utility breaker, measure outgoing voltage and phasing of breaker, measure incoming voltage of transfer switch and note position of transfer switch and manually open breaker.

c. Diesel generator breaker. Verify utility breaker open, start diesel generator, verify diesel generator voltage, verify diesel generator and utility voltage have same magnitude and phasing, manually close diesel breaker, measure outgoing voltage and phasing, measure voltage at transfer switch and note position of transfer switch, manually open breaker and stop diesel generator and place in auto.

d. Transfer switch. Verify diesel generator stopped and in auto, verify utility bus energized, manually close utility breaker. Verify position of transfer switch and indication light status, measure input and output voltage of transfer switch, check phasing of utility bus to output of transfer switch. Manually open utility breaker. Diesel generator should start and switch should transfer to diesel generator. Note timing of diesel generator start and transfer from opening of utility breaker. Manually close utility breaker. Switch should transfer to utility and diesel generator should stop. Note timing of transfer and diesel generator stop from closing of utility breaker. Push test switch to simulate normal source failure. Verify diesel generator starts and transfer switch switches to diesel generator, return switch to utility feed and verify diesel generator stops.

e. UPS (rectifier/ battery charger/battery). Verify UPS incoming breaker open. Verify utility feed closed through to input of UPS and measure voltage and phasing. Verify rectifier/battery charger output A breaker open. Verify rectifier/battery charger output B breaker open. Verify battery breaker A open and measure battery voltage and polarity. Verify battery breaker B open and measure battery voltage and polarity. Verify inverter A and inverter B incoming breakers open. Close UPS incoming breaker A and measure rectifier/battery charger A output voltage, check dc output meter. Press battery "pre charge" button, if available, and close rectifier/battery charger A output breaker and close battery breaker A. Measure battery charger voltage. Allow unit to run until battery fully charged or for a minimum of 24 hours. Record time. Measure rectifier/battery charger A output current and read meter every 4 hours. Open UPS incoming breaker A. Operate UPS from battery until minimum voltage recorded (1 to 4 hours). Open battery breaker A. Close UPS incoming breaker B and measure rectifier/battery charger B output voltage, check dc output meter. Press battery "pre charge" button, if available, and close rectifier/battery charger B output breaker and close battery breaker B. Measure battery charger voltage. Allow unit to run until battery fully charged or for a minimum of 24 hours. Record time. Measure rectifier/battery charger B output current and read meter every 4 hours.

f. UPS (inverter/static switch). Verify UPS operational through rectifier/battery charger and battery.

(1) Verify UPS normal condition operation.

(a) Verify battery charged and on float.

(b) Measure float voltage

(c) Verify inverter A and inverter B breakers open.

(d) Verify static switch switched to inverter A.

(e) Close inverter A and B input breakers.

(f) Measure inverter A and inverter B output voltage and read meters.

(g) Verify inverter A and inverter B outputs in phase.

(h) Verify static switch in inverter A position.

(2) Verify proper operation of static switches.

(a) Open inverter A incoming breaker.

(b) Verify static switch switches to inverter B.

(c) Measure voltage and ensure bumpless.

(d) Close inverter A incoming breaker and verify static switch switches to A.

(e) Measure voltage and ensure bumpless.

(f) Open inverter B incoming breaker and verify static switch stays connected to inverter A.

(g) Measure voltage and ensure bumpless.

(3) Verify low voltage trip.

(a) Open rectifier/battery charger output breakers.

(b) Open battery breakers.

(c) Verify inverter A and B trip on low voltage.

(d) Close rectifier battery charger B output breaker and battery breakers.

(e) Close inverter A and B input breakers.

(f) Open UPS incoming breakers.

(g) verify inverter A and B output (feed from battery).

(h) Measure voltage and current.

(i) Close rectifier battery charger A output breaker and battery breakers.

(j) Open UPS incoming breaker.

(k) Verify inverter A and B output present (feed from battery).

(l) Measure voltage and current.

g. Loading UPS. Close incoming breaker to UPS bus. Verify UPS is energized through static switch. Verify all UPS loads connected properly and ready to start Close load breaker on UPS bus sequentially. Measure voltage and read UPS meters at each step. Add load until UPS loads equal normal design load. Run for 4 hours and check for overheating.

h. Utility trip test. Verify UPS loaded and connected to utility. Manually open utility breaker. Verify battery picks up load. Read current. Verify diesel generator starts, transfer switch transfers to diesel generator, diesel generator picks up load, and battery returns to float mode. Measure voltage and current at UPS and ensure bumpless transfer. Close utility breaker. Verify transfer switch transfers to utility, battery picks up load during transfer, diesel generator stops, and battery returns to float after utility picks up load. Measure voltage and current at UPS bus and ensure bumpless transfer.

i. Inverter A to inverter B loaded transfer test. Verify UPS loaded and connected to utility. Open inverter A incoming breaker. Verify static switch switches to inverter B. Measure voltage and current at

UPS bus and ensure bumpless transfer. Close inverter A incoming breaker. Verify that static switch switches to inverter A. Measure voltage and current at UPS bus and ensure bumpless transfer.

j. Battery discharge test. Verify UPS loaded and connected to utility. Notify plant of pending UPS trip. Open diesel generator breaker and block auto and manual start. Open utility breaker. Verify battery picks up load. Measure battery voltage and current. Measure UPS voltage and current and ensure bumpless transfer. Operate UPS from battery until battery minimum voltage reached (1 to 4 hours). Record voltage. Verify inverter A and B trip when batteries reach minimum voltage. Notify plant of pending UPS re-energization. Reclose utility breaker. Close diesel generator breaker and return to auto start mode. Verify battery on float and charging, measure current. Verify when battery fully charged and record time to charge.

k. Checklists. The inspection is considered complete when the UPS System Inspection and Test (see figure 6-8 on page 6-16 for completed sample of DA Form 7475-R) is satisfactorily completed.

6-6. Possible failures and corrective actions

Table 6-1 lists general problems that may arise during the testing of the equipment and systems along with possible troubleshooting techniques. For all problems, consult the equipment and component manuals for troubleshooting directions, check fuses/lights/breakers/etc. for continuity, check equipment calibration and settings, and look for faulty equipment or connections.

Table 6-1. Possible failures and corrective actions of the UPS system

Utility and Generator Circuit Breaker Problem	**Areas to Check**
Breakers will not close/trip	Mechanical alignment/ interlocks Relay and protective device settings and operation Mis-wired circuits
Breaker trips inadvertently	Ground on cable or system Relay and protective device settings and operation System overload Mis-wired circuits

Transfer Switch	**Areas to Check**
Switch will not transfer	Solenoid operating mechanism Time delay settings Control panel Mis-wired circuits
UPS-Rectifier/ Battery Charger	**Areas to Check**
No output voltage/ current	Input voltage/ breaker Rectifier (SCR) and rectifier fuse Input transformer Control board
Low output voltage	Dead input phase Rectifier (SCR) and rectifier fuse Voltage control settings or potential Control board

Table 6-1. Possible failures and corrective actions of the UPS system (continued)

High output voltage	Input voltage high Voltage control settings or potential Control board
Output voltage not adjustable	Voltage control potential Control board
High output current	System overload/ short Current limit setting Control board
Low output current	Current limit setting Control board

UPS- Battery	**Areas to Check**
Low battery voltage/ current/ capacity	Battery and cell connections Electrolyte level Cell voltage Cell condition, cleanliness, and age Float voltage/ current Battery room temperature Battery design versus actual load Battery/ system ground
Breaker trip	Battery / system short System overload

UPS- Inverters/ Static Switch	**Areas to Check**
No output voltage/ current	Input voltage/ breaker SCR or diode static switch constant voltage transformer control boards
Low output voltage	Input voltage System overload System frequency Control board

UPS- Inverters/ Static Switch	**Areas to Check**
High/Low output frequency	Input voltage Alternate source Frequency control setting Control board
No transfer from Inverter A to Inverter B	Primary/alternate source Static switch Synchronizing circuit Control board

UPS System	**Areas to Check**
No output voltage/ current	Incoming voltage Circuit breakers System components

Table 6-1. Possible failures and corrective actions (continued)

No transfer to Diesel generator	Diesel generator equipment/ breaker Transfer switch
Low/high output voltage/ current	Incoming voltage System components Battery sizing/ capacity System sizing/ capacity
Transfers not bumpless	Battery connection Static switch Control board
Inadequate UPS capacity	UPS sizing/ capacity Battery sizing/ capacity

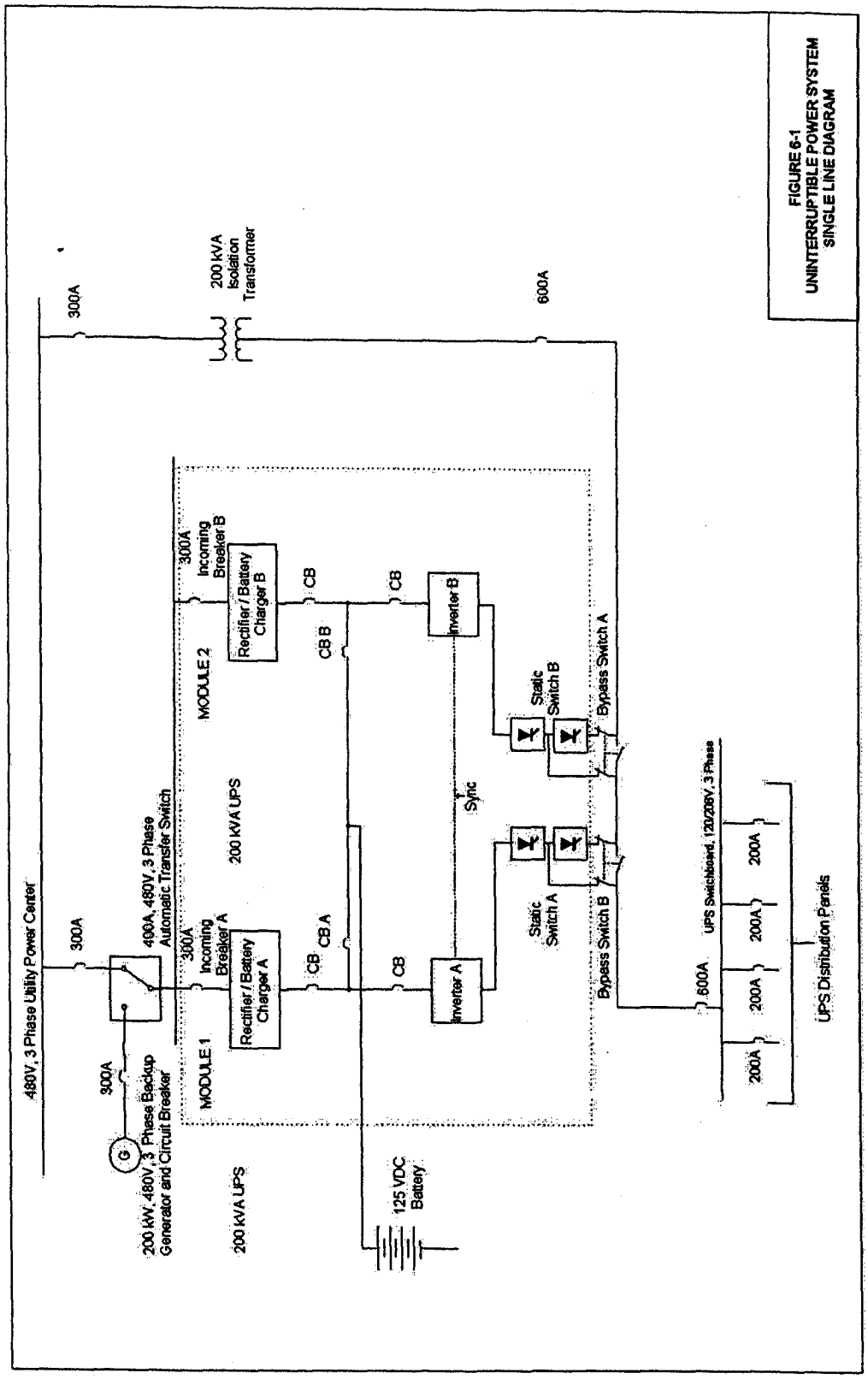

Figure 6-1. Uninterruptible power supply system single line diagram

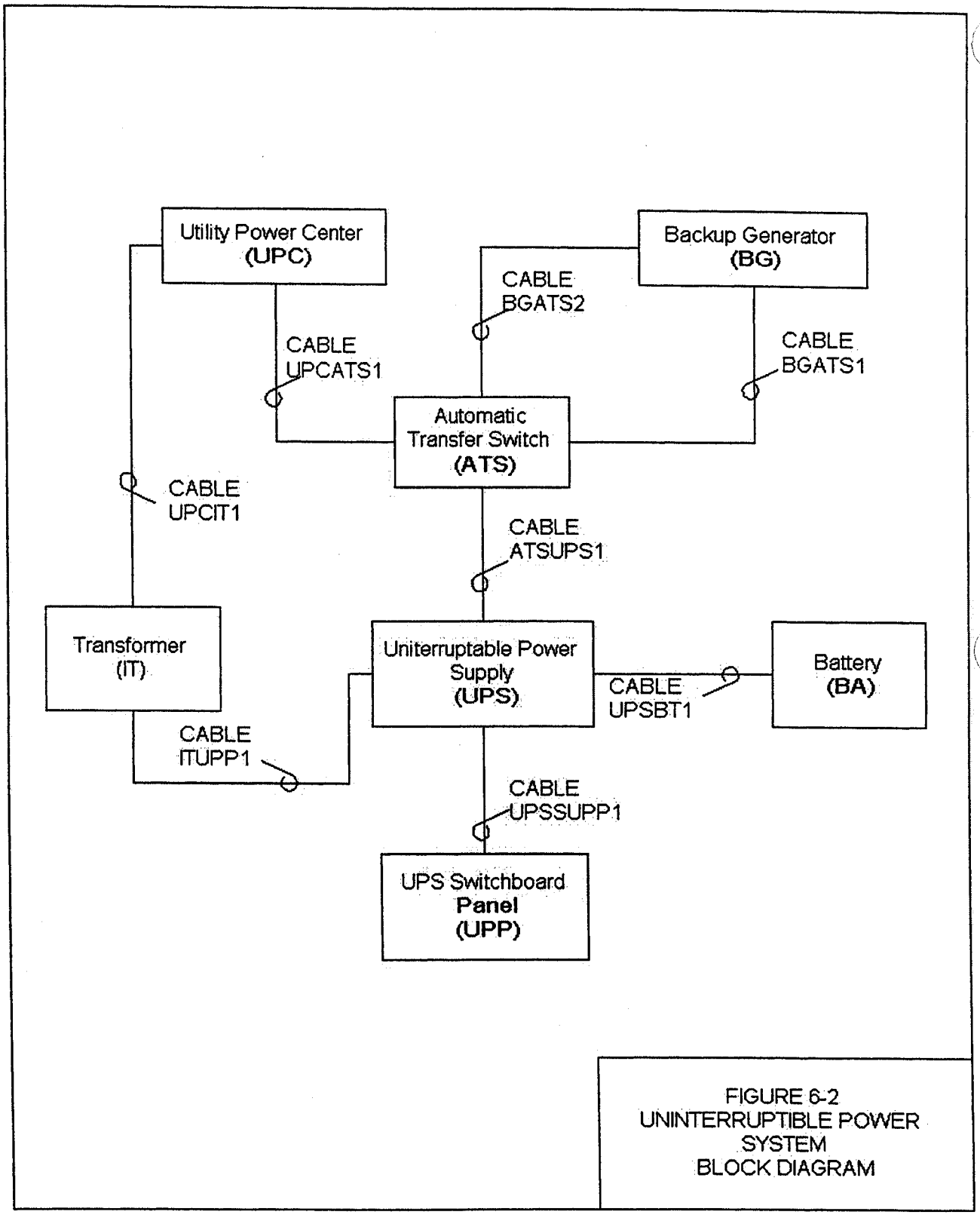

Figure 6-2. Uninterruptible power supply system block diagram

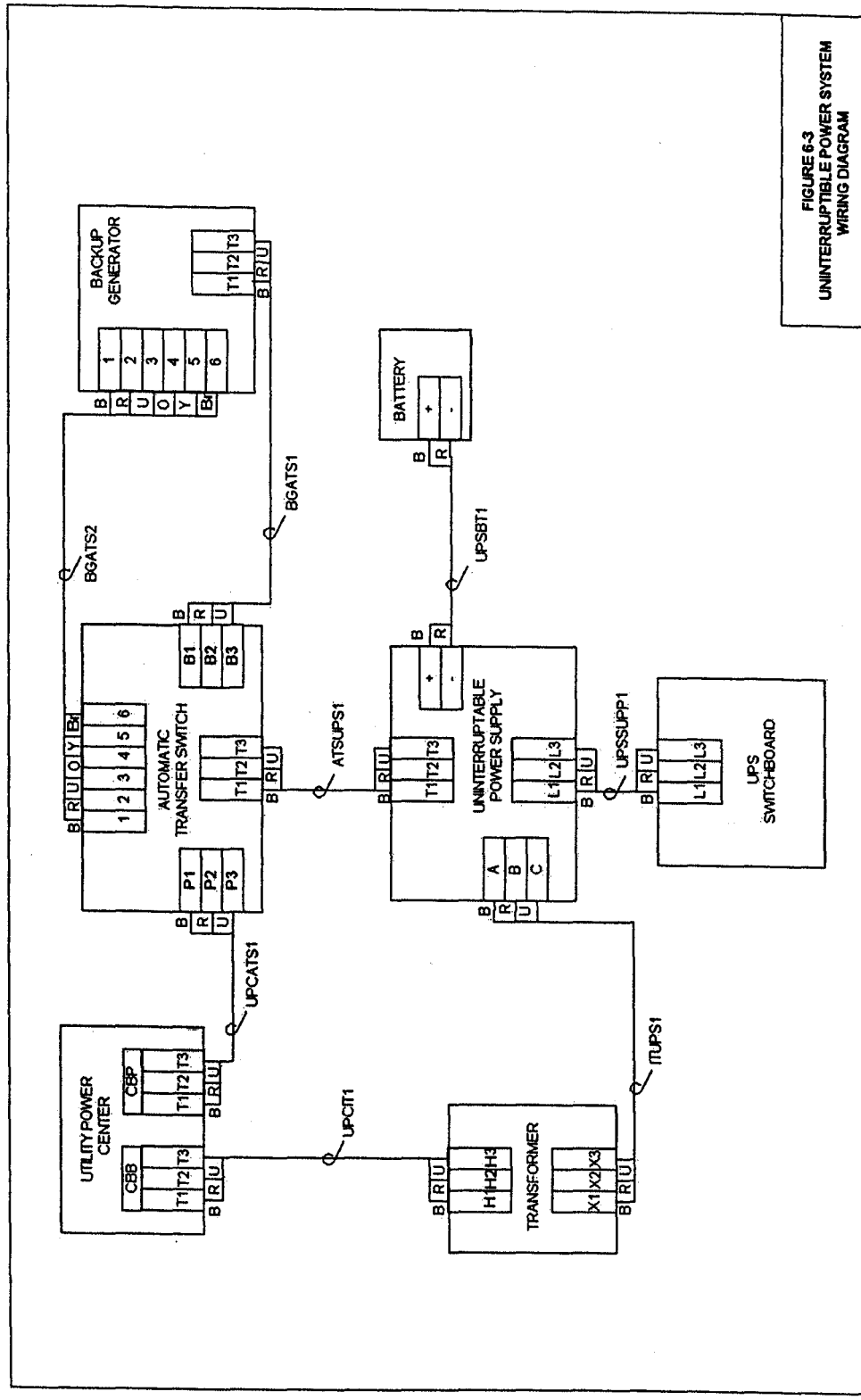

Figure 6-3. Uninterruptible power supply system wiring diagram

TRANSFER SWITCH INSPECTION CHECKLIST

For use of this form see TM 5-694; the proponent agency is COE.

SECTION A - CUSTOMER DATA

1. PLANT/BUILDING Bldg 1928	2. LOCATION Fort Tank	3. JOB NUMBER 02-125
4. EQUIPMENT Switch	5. CIRCUIT DESIGNATION F1	6. DATE *(YYYYMMDD)* 20020823
7. TEST EQUIPMENT AND CALIBRATION DATE Biddle/ 14 May 2002		8. TESTED BY John Smith

SECTION B - EQUIPMENT DATA

9. MANUFACTURER Russell Electric	10. STYLES/S.O.	11. VOLTAGE RATING 600V	12. CURRENT RATING 1200A
13. SWITCH RATING 4 Pole		14. ENCLOSURE TYPE	15. FREQUENCY 60hz

16. **SECTION C - VISUAL AND ELECTRICAL/MECHANICAL INSPECTION**

CHECK POINT	COND*	NOTES	CHECK POINT	COND*	NOTES
EXTERIOR OF EQUIPMENT	A		EQUIPMENT IDENTIFICATION	A	
COMPLETENESS OF ASSEMBLY	A		BRACING	A	
INDICATING LIGHTS	A		PROPER PHASE CONNECTIONS AND COLOR CODE	A	
SWITCH FOR FREEDOM OF MOVEMENT	A		ENVIRONMENTAL CLASSIFICATION	A	
ELECTRICAL/MECHANICAL INTERLOCKS	A		WORKING CLEARANCE	A	
ADJUST TIMING SETTINGS	A		ANCHORAGE	A	
PROPER EQUIPMENT GROUNDING	A		REFERENCE DRAWINGS	A	
CONTACT RESISTANCE	A		PROPER LUBRICATION	A	
TIGHTNESS OF BOLTED CONNECTIONS	A		PT AND CONTROL FUSE SIZE	A	

SECTION D - ELECTRICAL TESTS

17. INSULATION RESISTANCE @ V	A-GRD	B-GRD	C-GRD	A-B	B-C	C-A

18. NOTES

1. SWITCH TRANSFERS ON LOSS OF NORMAL POWER AT SPECIFIED TIME DELAY.
2. SWITCH TRANSFER BACK TO NORMAL POWER ON RETURN OF NORMAL POWER SERVICE AT SPECIFIED TIME DELAY.
3. AUXILIARY CONTACTS OPERATE CORRECTLY DURING NORMAL AND ABNORMAL POWER CONDITIONS.

*CONDITION: A - ACCEPTABLE; R - NEEDS REPAIR, REPLACEMENT OR ADJUSTMENT; C - CORRECTED; NA - NOT APPLICABLE

DA FORM 7471-R, AUG 2002 USAPAV1.00

Figure 6-4. Sample of completed DA Form 7471-R

UNINTERRUPTIBLE POWER SUPPLY (UPS) INSPECTION CHECKLIST

For use of this form see TM 5-694; the proponent agency is COE.

SECTION A - CUSTOMER DATA

1. PLANT/BUILDING	2. LOCATION		3. JOB NUMBER
Bldg 358	Fort Tank		02-126
4. EQUIPMENT	5. CIRCUIT DESIGNATION FED TO	6. CIRCUIT DESIGNATION FED FROM	7. DATE (YYYYMMDD)
UPS	Main	Main	20020823
8. TEST EQUIPMENT AND CALIBRATION DATE			9. TESTED BY
Fluke 45/ 7 Aug 2002			John Smith

SECTION B - EQUIPMENT DATA

10. MANUFACTURER	11. STYLES/S.O.	12. VOLTAGE RATING	13. kVA RATING
Liebert		600V	130 kVA

SECTION C - VISUAL AND ELECTRICAL/MECHANICAL INSPECTION

14. CHECK POINT	COND*	NOTES	CHECK POINT	COND*	NOTES
EXTERIOR OF EQUIPMENT	A		EQUIPMENT IDENTIFICATION	A	
COMPLETENESS OF ASSEMBLY	A		BRACING	A	
INDICATING LIGHTS	A		PROPER PHASE CONNECTIONS AND COLOR CODE	A	
SWITCH FOR FREEDOM OF MOVEMENT	A		ENVIRONMENTAL CLASSIFICATION	A	
MANUAL OPERATION OF CIRCUIT BREAKERS	A		WORKING CLEARANCE	A	
TIMING SETTINGS	A		ANCHORAGE	A	
PROPER GROUNDING	A		REFERENCE DRAWINGS	A	
PROPER VOLTAGE CONNECTIONS	A		CONTROL FUSE SIZE AND CONTINUITY	A	
TIGHTNESS OF BOLTED CONNECTIONS	A		VERIFY ALL TRANSFER SWITCH OPERATIONS	A	
TEST CIRCUIT BREAKERS WITH CURRENT INJECTION TESTER	A				

SECTION D - ELECTRICAL TESTS

15. VAC (OUTPUT)	A-GRD	B-GRD	C-GRD	A-B	B-C	C-A

16. NOTES

1. VERIFY SYSTEM GROUND (AT ONE POINT ONLY).

*CONDITION: A = ACCEPTABLE; R = NEEDS REPAIR, REPLACEMENT OR ADJUSTMENT; C = CORRECTED; NA = NOT APPLICABLE

DA FORM 7472-R, AUG 2002 USAPAV1.00

Figure 6-5. Sample of completed DA Form 7472-R

BATTERY INSPECTION CHECKLIST

For use of this form see TM 5-694; the proponent agency is COE.

SECTION A - CUSTOMER DATA

1. PLANT/BUILDING Bldg 358	2. LOCATION Fort Tank	3. JOB NUMBER 02-133
4. EQUIPMENT BAT-1	5. CIRCUIT DESIGNATION CKT-2	6. DATE *(YYYYMMDD)* 20020823
7. TEST EQUIPMENT AND CALIBRATION DATE Fluke 87, Hydrometer, Thermometer, Load bank		8. TESTED BY John Smith

SECTION B - EQUIPMENT DATA

9. MANUFACTURER FIAMM	10. STYLES/S.O. SD 5	11. VOLTAGE RATING 3 Volts per cell	12. CURRENT RATING
13. ENCLOSURE TYPE Wet Cell	14. FREQUENCY 60 hz	15. WET BULB TEMPERATURE 65 F	16. DRY BULB TEMPERATURE 85 F

SECTION C - VISUAL AND ELECTRICAL/MECHANICAL INSPECTION

17. CHECK POINT	COND*	NOTES	CHECK POINT	COND*	NOTES
EXTERIOR OF EQUIPMENT	A		EQUIPMENT IDENTIFICATION	A	
COMPLETENESS OF ASSEMBLY	A		BRACING	A	
ELECTROLYTE LEVEL	A		ENVIRONMENTAL CLASSIFICATION	A	
VENTS SEALED AND PLUGS INSTALLED	A		WORKING CLEARANCE	A	
PROPER POLARITY CONNECTIONS	A		ANCHORAGE	A	
TIGHTNESS OF BOLTED CONNECTIONS	A		CHECK FOR EXHAUST FAN IF IN ENCLOSED ENVIRONMENT	A	
PROPER GROUNDING	A		REFERENCE DRAWINGS	A	
CHECK FOR SHOWER AND EYEWASH STATION	A		CHECK FOR ACCESS TO BATTERIES FOR O & M	A	
TEST CIRCUIT BREAKERS WITH CURRENT INJECTION TESTER	A		CHECK UPS CONTROL PANEL ALARMS	A	
TEST CIRCUIT BREAKERS	A		TEST TRANSFER SWITCH	A	

SECTION D - ELECTRICAL TESTS

18. MEASUREMENT DESCRIPTION	VOLTAGE AND CURRENT MEASUREMENTS				
	VOLTAGE**		CURRENT**		
	POSITIVE	NEGATIVE	POSITIVE	NEGATIVE	GROUND
BATTERY VOLTAGE & CURRENT					

19. NOTES

1. MEASURE RESISTANCE BETWEEN CELL CONNECTIONS.
2. MEASURE VOLTAGE ACROSS EACH CELL.
3. CHECK SPECIFIC GRAVITY OF EACH CELL.
4. TEST AND MAINTAIN BATTERY (CELLS) IN ACCORDANCE WITH MANUFACTURERS RECOMMENDATIONS.

*CONDITION: A - ACCEPTABLE; R - NEEDS REPAIR, REPLACEMENT OR ADJUSTMENT; C - CORRECTED; NA - NOT APPLICABLE
**NOTE VALUE AND PHASING

DA FORM 7473-R, AUG 2002 USAPAV1.00

Figure 6-6. Sample of completed DA Form 7473-R

UNINTERRUPTIBLE POWER SUPPLY (UPS) SWITCHBOARD INSPECTION CHECKLIST

For use of this form see TM 5-694; the proponent agency is COE.

SECTION A - CUSTOMER DATA

1. PLANT/BUILDING Bldg 1930	2. LOCATION Fort Tank	3. JOB NUMBER 02-128
4. EQUIPMENT Switchboard	5. CIRCUIT DESIGNATION Main	6. DATE *(YYYYMMDD)* 20020823
7. TEST EQUIPMENT TYPE/BRAND AND CALIBRATION DATE Biddle		8. TESTED BY John Smith

SECTION B - EQUIPMENT DATA

9. MANUFACTURER Siemens	10. STYLES/S.O.	11. VOLTAGE RATING 600V	12. CURRENT RATING 2000A
13. BUS RATING/CB INTERRUPTING RATING 2000A/ 50kA			

SECTION C - VISUAL AND ELECTRICAL/MECHANICAL INSPECTION

14. CHECK POINT	COND*	NOTES	CHECK POINT	COND*	NOTES
EXTERIOR OF EQUIPMENT	A		BRACING	A	
COMPLETENESS OF ASSEMBLY	A		PROPER PHASE CONNECTION AND COLOR CODE	A	
INDICATING LIGHTS	A		ENVIRONMENTAL CLASSIFICATION	A	
MANUAL OPERATION OF CIRCUIT BREAKERS	A		WORKING CLEARANCE	A	
PROPER GROUNDING	A		ANCHORAGE	A	
CONDITION OF INSULATION	A		REFERENCE DRAWINGS	A	
PROPER VOLTAGE CONNECTIONS	A		VERIFY PROPER SIZES OF BREAKERS AND FUSES	A	
TIGHTNESS OF BOLTED CONNECTIONS	A		CHECK PROPER EQUIPMENT GROUNDING TO GROUNDING BUS	A	
EQUIPMENT IDENTIFICATION	A				

SECTION D - ELECTRICAL TESTS

15. BUS INSULATION RESISTANCE @ 1000 v	A-GRD	B-GRD	C-GRD	A-B	B-C	C-A
	10 megohm	12 megohm	12 megohm			

16. NOTES

1. TEST ALL CIRCUIT BREAKERS ACCORDING TO MANUFACTURER'S RECOMMENDATIONS.

*CONDITION: A - ACCEPTABLE; R - NEEDS REPAIR, REPLACEMENT OR ADJUSTMENT; C - CORRECTED; NA - NOT APPLICABLE

DA FORM 7474-R, AUG 2002 USAPAV1.00

Figure 6-7. sample of completed DA Form 7474-R

UNINTERRUPTIBLE POWER SUPPLY (UPS) SYSTEM INSPECTION CHECKLIST

For use of this form see TM 5-694; the proponent agency is COE.

SECTION A - CUSTOMER DATA

1. PLANT/BUILDING Bldg 316	2. LOCATION Fort Tank	3. JOB NUMBER 02-129
4. EQUIPMENT UPS System	5. CIRCUIT DESIGNATION Critical	6. DATE *(YYYYMMDD)* 20020824
7. TEST EQUIPMENT NA		8. TESTED BY John Smith

SECTION B - VISUAL AND ELECTRICAL/MECHANICAL INSPECTION

9. CHECK POINT	COND*	NOTES	CHECK POINT	COND*	NOTES
COMPONENT INSPECTION/TESTING	A		ENERGIZE AND TEST SYSTEM	A	
INSTALLATION INSPECTION/TESTING	A		UTILITY TRIP TEST	A	
WIRING VISUAL VERIFICATION	A		LOADED TRANSFER TEST (NORMAL, EMERGENCY & RETURN)	A	
GENERATOR CONTROL FUNCTIONS	A		TIGHTNESS OF BOLTED CONNECTIONS	A	
LOADING UPS TEST	A		BATTERY DISCHARGE TEST	A	
DISCONNECT RECTIFIERS & INVERTERS SEPARATELY. DOES SYSTEM OPERATE CORRECTLY?	A		TEST ALL UPS DIAGNOSTIC FAULT INDICATORS	A	

SECTION D - ELECTRICAL TESTS

10.	A-N	B-N	C-N	A-B	B-C	C-A	A	B	C	N	G
UPS INPUT	277	277	277	465	465	465	100	150	100		4
	A-N	B-N	C-N	A-B	B-C	C-A	A	B	C	N	G
UPS OUTPUT	277	277	277	480	465	465	100	150	100	20	4
	A-N	B-N	C-N	A-B	B-C	C-A	A	B	C	N	G
UPS SWITCHBOARD HARMONIC (THD)	3%	3%	4%				38%	42%	40%		

11. NOTES

*CONDITION: A - ACCEPTABLE; R - NEEDS REPAIR, REPLACEMENT OR ADJUSTMENT; C - CORRECTED; NA - NOT APPLICABLE
**NOTE VALUE AND PHASING

DA FORM 7475-R, AUG 2002 USAPAV1.00

Figure 6-8. Sample of completed DA Form 7475-R