TECHNICAL MANUAL

COMMISSIONING OF ELECTRICAL SYSTEMS FOR COMMAND, CONTROL, COMMUNICATIONS, COMPUTER, INTELLIGENCE, SURVEILLANCE, AND RECONNAISSANCE (C4ISR) FACILITIES

APPROVED FOR PUBLIC RELEASE: DISTRIBUTION IS UNLIMITED

HEADQUARTERS, DEPARTMENT OF THE ARMY
23 AUGUST 2002

REPRODUCTION AUTHORIZATION/RESTRICTIONS

This manual has been prepared by or for the Government and, except to the extent indicated below, is public property and not subject to copyright.

Reprint or republication of this manual should include a credit substantially as follows: "Department of the Army, TM 5-694, Commissioning of Electrical Systems for Command, Control, Communications, Computer, Intelligence, Surveillance, and Reconnaissance (C4ISR) Facilities, *23 August 2002*."

Table 2-1, *Recommended minimum resistance values at 40°C (all values in MΩ)* and Table 2-2, *Recommended minimum values of polarization index for all machine components insulation classes* reprinted with permission from IEEE Std. 43-2000 "*IEEE Recommended Practice for Testing Insulation Resistance of Rotating Machinery*", copyright © 2000 by IEEE. The IEEE disclaims any responsibility or liability resulting from the placement and use in the described matter.

Table 3-1, *Medium-voltage cables maximum field acceptance test voltages (kV, dc)* reprinted from NETA's Acceptance Testing Specifications, copyright © 1999. Courtesy of the International Electrical Testing Association. All rights reserved.

Technical Manual

No. 5-694

HEADQUARTERS
DEPARTMENT OF THE ARMY
Washington, DC, *23 August 2002*

APPROVED FOR PUBLIC RELEASE; DISTRIBUTION IS UNLIMITED

COMMISSIONING OF ELECTRICAL SYSTEMS FOR COMMAND, CONTROL, COMMUNICATIONS, COMPUTER, INTELLIGENCE, SURVEILLANCE, AND RECONNAISSANCE (C4ISR) FACILITIES

		Paragraph	*Page*
CHAPTER 1	INTRODUCTION		
	Purpose	1-1	1-1
	Scope	1-2	1-1
	Reference	1-3	1-1
	General system testing requirements	1-4	1-1
	Component testing	1-5	1-2
	System commissioning testing	1-6	1-2
	Cost of commissioning	1-7	1-2
CHAPTER 2	GENERAL SYSTEM TESTING REQUIREMENTS		
	Introduction	2-1	2-1
	General test plan	2-2	2-1
	Types of testing methods	2-3	2-8
	Insulation testing	2-4	2-8
	Switch/circuit breaker testing	2-5	2-13
	Transformer testing	2-6	2-14
	Rotating machine testing	2-7	2-14
	Protective relays	2-8	2-16
	Ground system testing	2-9	2-17
CHAPTER 3	COMPONENT TESTING		
	Introduction to component testing	3-1	3-1
	Circuit switchers	3-2	3-1
	Transformers	3-3	3-2
	Switchgear – medium voltage	3-4	3-3
	Switchgear – low voltage	3-5	3-3
	Transfer switch	3-6	3-4
	AC/DC drives	3-7	3-4
	Motors	3-8	3-4
	Generators	3-9	3-5
	Batteries	3-10	3-7
	Battery chargers	3-11	3-8
	UPS systems	3-12	3-8
	Cables	3-13	3-9

		Paragraph	Page
CHAPTER 4	MAIN POWER SYSTEM		
	Description of main power system	4-1	4-1
	Operation of main power system	4-2	4-2
	Commissioning plan for main power system	4-3	4-2
	Installation inspections and component testing of main power system	4-4	4-2
	Energizing and test of the main power system	4-5	4-3
	Possible failures and corrective actions of the main power system	4-6	4-5
CHAPTER 5	STANDBY POWER SYSTEM		
	Description of standby power system	5-1	5-1
	Operation of standby power system	5-2	5-1
	Commissioning plan for standby power system	5-3	5-2
	Installation inspections and component testing of standby power system	5-4	5-2
	Energizing and test of the standby power system	5-5	5-3
	Possible failures and corrective actions of the standby power system:	5-6	5-4
CHAPTER 6	UNINTERRUPTIBLE POWER SUPPLY SYSTEMS		
	Description of uninterruptible power supply (UPS) system	6-1	6-1
	Operation of uninterruptible power supply system	6-2	6-2
	Commissioning plan for the UPS system	6-3	6-2
	Installation inspections and component testing of the UPS system	6-4	6-2
	Energizing and test of the UPS system	6-5	6-3
	Possible failures and corrective actions	6-6	6-6
APPENDIX A	REFERENCES		A-1

LIST OF TABLES

Table	*Title*	*Page*
1-1	Costs of commissioning, new construction	1-3
2-1	Recommended minimum insulation resistance values at 40°C (all values in MΩ)	2-10
2-2	Recommended minimum values of polarization index for all machine components insulation classes	2-16
3-1	Medium-voltage cables maximum field acceptance test voltages (kV, dc)	3-10
4-1	Circuit switcher functional checklist	4-3
4-2	Possible failures and corrective actions of the main power system	4-5
5-1	Possible failures and corrective actions of the standby power system	5-4
6-1	Possible failures and corrective actions of the UPS system	6-6

LIST OF FIGURES

Figure	*Title*	*Page*
Figure 2-1	Sample of a commissioning plan	2-8
Figure 2-2	Step-voltage vs. time	2-12
Figure 2-3	Step-voltage high-potential test current	2-12
Figure 2-4	Power transformer diagram (Reprinted from Department of the Army TM 5-686. Power Transformer Maintenance and Acceptance Testing 16 November 1998)	2-15
Figure 3-1	Static UPS system 150 to 750 kVA (courtesy of Liebert).	3-9
Figure 4-1	Main power system single line diagram	4-7
Figure 4-2	Main power system control cable block diagram	4-8
Figure 4-3	Main power system functional diagram – circuit switcher (typical for 2)	4-9
Figure 4-4	Main power system functional diagram – switchgear load breaker (typical for 8)	4-10
Figure 4-5	Main power system functional diagram – switchgear incoming breaker (typical for 3)	4-11
Figure 4-6	Main power system circuit switcher wiring diagram (typical for 2)	4-12
Figure 4-7	Main power system incoming breaker wiring diagram	4-13
Figure 4-8	Sample of completed DA Form 7463-R	4-14
Figure 4-9	Sample of completed DA Form 7464-R	4-15
Figure 4-10	Sample of completed DA Form 7465-R	4-16
Figure 4-11	Sample of completed DA Form 7466-R	4-17
Figure 4-12	Sample of completed DA Form 7467-R	4-18
Figure 5-1	Standby power system single line diagram	5-6
Figure 5-2	Standby power system block diagram	5-7
Figure 5-3	Standby power system wiring diagram	5-8
Figure 5-4	Engine fault tree	5-9
Figure 5-5	Sample of completed DA Form 7468-R	5-10
Figure 5-6	Sample of completed DA Form 7469-R	5-12
Figure 5-7	Sample of completed DA Form 7470-R	5-13
Figure 6-1	Uninterruptible power supply system single line diagram	6-9
Figure 6-2	Uninterruptible power supply system block diagram	6-10
Figure 6-3	Uninterruptible power supply system wiring diagram	6-11
Figure 6-4	Sample of completed DA Form 7471-R	6-12
Figure 6-5	Sample of completed DA Form 7472-R	6-13
Figure 6-6	Sample of completed DA Form 7473-R	6-14
Figure 6-7	Sample of completed DA Form 7474-R	6-15
Figure 6-8	Sample of completed DA Form 7475-R	6-16

CHAPTER 1

INTRODUCTION

1-1. Purpose

The purpose of this publication is to provide guidance to engineering managers/planners for the commissioning of electrical systems at command, control, communications, computer, intelligence, surveillance, and reconnaissance (C4ISR) facilities. It specifically addresses different types of electrical power systems, the preparation of commissioning statements of work (SOW), specifications, and examples of commissioning tests that should be included during start-up. Electrical systems commissioning (sometimes referred to as "acceptance testing") on new projects is critical to ascertain that a system is installed correctly and that it will remain in service for its projected life cycle.

1-2. Scope

Guidance for commissioning of electric power systems on new projects is discussed in this manual. The systems addressed include the main power substation, standby generator, and uninterruptible power supply. The following areas are addressed: general commissioning criteria, commissioning plan, documentation requirements, verification procedures, system functional performance tests, deferred performance tests, corrective measures, acceptance documentation, post commissioning follow up procedures and examples of commissioning.

1-3 References

Appendix A contains a list of references used in this manual. Other pertinent literature may be substituted or used as supplements. Prescribed forms are also listed in appendix A.

1-4 General system testing requirements

The purpose of electric systems commissioning is to increase the reliability of electrical power systems after installation by identifying problems and providing a set of baseline values for comparison with subsequent routine tests. A procedure should be developed to include a planned approach (road map) of what should be done in order to verify the proper system installation. This procedure is the commissioning plan. Specific areas addressed in a commissioning plan include the verification of the installation of all equipment/components, interface connections between equipment and individual systems, and interconnection drawings. The development of this test plan specific to each system and/or component is key to the usefulness of any maintenance program. The plan consists of the schedule of when acceptance and routine tests should be performed, test forms to be used to record the outcome of the tests which are retained for comparison with previous and subsequent tests, and a listing of the required test devices. Since the results of the commissioning tests become baseline test values to compare with later tests and the results of the routine maintenance tests are compiled to identify any downward trend in performance, it is vital to the maintenance program to have accurate and complete records. To perform the testing, the plan lists all required tests in order of performance and gives a schedule for each test. The work items and schedule depend on many items including the importance and cost of the equipment, consequences of failure, age of equipment, past and future frequency of service, hours of operation, future maintenance availability, environmental conditions, and safety requirements.

1-5 Component testing

The reliability of any system is dependent on the interconnection of the equipment and the equipment itself. This manual's purpose is predominately for testing of electric systems themselves. It is assumed that the detailed and comprehensive individual testing of equipment has been completed before the commencing of commissioning of the system. However, general testing procedures for the components of the systems described in this manual are addressed in chapter 3. Commissioning requirements for the system components are typically provided with the original proposal for the procurement of the equipment. The requirements provided by the equipment manufacturer should be adhered to in addition to the recommended testing herein. Although there are many of different components to any electrical system, there are some tests that are common among the equipment. Examples of the common testing procedures include the assembly check, alignment check, grounding verification, insulation resistance tests and polarization index to name a few. These common tests are described in detail in chapter 2. Sufficient time should be allocated to define the inspections required, perform the check, and document the results. A review of the system drawings will show major pieces of equipment. Specific procedures should be developed for each test referencing the equipment to be used, drawings to be followed, and step by step procedures with readings to be recorded and forms for the results.

1-6 System commissioning testing

Electrical systems commissioning on new projects is critical to ascertain that a system is installed properly and that it will remain in service for its projected life cycle. The commissioning of a system encompasses the individual testing of the related components, the verification of the component interconnection against the drawings, and the functional testing of the system as a whole. An understanding of the equipment involved and the modes of operation for a system are essential to the development of the system commissioning plan. A survey of the equipment of the system and listing the equipment in order of importance and startup is the first step in developing the commissioning plan. The schedule of the tests and inspections is dependent on many aspects of the equipment such as its importance and cost, the frequency of service, hours of operation, environmental conditions, accessibility, and safety requirements. The inspection, testing, and startup plan is then developed in conjunction with this schedule with instructions and procedures for the test plan. Examples of systems testing are discussed in chapters 4, 5 and 6. DA Forms 7463-R through 7475-R are checklists designed to assist in these inspections and tests. They are found as reproducible forms at the end of this manual. Problems may arise during the testing of the equipment and systems. In order to identify and correct these problems, troubleshooting techniques should be developed. Checking of equipment such as fuses, lights, and breakers for continuity, equipment calibration and settings, and investigating for faulty equipment or connections should be the first troubleshooting steps. For all problems, the equipment and component manuals are consulted for troubleshooting directions. Examples of the possible causes to common problems are shown for each system in the chapters that follow.

1-7 Cost of commissioning

The cost of commissioning for an electrical system is dependent upon many factors including the system size, complexity and the level of reliability desired. New building construction, renovation of an existing building, or the modernization also will effect the cost of commissioning. Experience has shown that the initial commissioning cost is more than offset by increased system reliability and reduced operating costs. The cost for commissioning a new building can range from 0.5 to 1.5 percent of the total construction cost as shown in the table below. For an existing building the commissioning costs can range from three to five percent of the total operating costs.

Table 1-1. Costs of commissioning, new construction

Commissioning Scope	Cost
Entire building(HVAC, Controls, Electrical, Mechanical) Commissioning	0.5-1.5% of total construction cost
HVAC and Automated Control System Commissioning	1.5-2.5% of mechanical system cost
Electrical Systems Commissioning	1.0-1.5% of electrical system cost
Energy Efficiency Measures Commissioning	$0.23-0.28 per square foot

Source: Portland Energy Conservation Incorporated/Building Commissioning Guide, US Department of Energy, 30 July 1998

CHAPTER 2

GENERAL SYSTEM TESTING REQUIREMENTS

2-1. Introduction

The purpose of electrical testing on systems and their components is two-fold. The first is to check the installation of the equipment and perform component and systems tests to ensure that, when energized, the system will function properly. The second is to develop a set of baseline test results for comparison in future testing to identify equipment deterioration. Commissioning tests are usually performed by independent contractors, the installation contractor, or the manufacturer. Each commissioning test should be witnessed by a person not associated professionally with the person performing the test. The individuals who perform the acceptance tests should be certified and/or licensed for the equipment under test. The system should be initially checked for damage, deterioration, and component failures using specific component checks, inspections, and tests defined by the equipment manufacturer. Then the interconnection of the system components should be checked, using de-energized and energized methods, to verify the proper interconnection and operation of the components, including on/off control, system process interlocks, and protective relaying functions. Once the above tests are complete, the system can be energized and operational tests and measurements should be performed. All steps and results of the testing should be carefully documented for review and for use in the future for comparison with the results of future tests. Many of the same component tests initially run will be performed at regular intervals as part of a maintenance program. The new results will be compared to the initial results, where variations may be indicative of problems like deterioration of insulation or dirty equipment. The steps involved are to review the system and equipment, develop a general system and specific equipment test plan, provide inspection and checks, perform component testing, verify and check the continuity of wiring, check control functions, calibrate instruments and relays, energize portions of the circuits and check for proper operation in a specific order, and, once complete, perform specific checks and control tests on the complete system during initial period of operation.

2-2. General test plan

There are management, economic, and technical requirements associated with every test plan. The development and use of a comprehensive test plan is like an insurance policy. While it has specific costs, it does not usually show any direct paybacks as the systems will usually startup without significant problems such as equipment failure or lost time. The cost of the tests will rise with the complexity of the test program. Many inspections and tests are redundant, but are used as checks and balances before system energization to ensure successful startup and operation. Many times, if the equipment is in the same operating condition as when it left the factory and the system design and installation are adequate, the system startup and testing will find no problems and the de-energized checks and energized testing may seem like a waste of time and money. There are occasions when a test will show bad insulation like a faulted transformer winding or a missing interlock in a control scheme that would have resulted in catastrophic failure if the system had been energized. The complexity of the system and equipment, experience of the designers/installers/operators, the possible results of a failure, and the costs of the testing are all considered when determining the amount of testing required. The component and system inspections and checks are the key to the success of the program. Sufficient time should be allocated to define the inspections required, perform the check, and document the results. A review of the system drawings will show major pieces of equipment. Specific procedures should be developed for each commissioning test referencing the equipment to be used, systems operation documents (SODs), systems

operation and maintenance manuals (SOMMs), drawings to be followed, and step by step procedures with readings to be recorded and forms for the results. Once the equipment is identified, the manufacturer's manuals should be used to identify the required receipt inspections, handling and installation procedures, energized and de-energized component tests, drawing and wiring verification, minimum report requirements for on-going maintenance and testing baseline, and requirements for repair and retesting if certain checks and tests produce unsatisfactory results. To perform the testing, a definite plan listing all required tests in order of performance and giving a schedule for each test should be developed. The work items and schedule will depend on many items including the importance and cost of the equipment, consequences of failure, age of equipment, past and future frequency of service, hours of operation, future maintenance availability, environmental conditions, and safety requirements. (For remote unattended systems, additional items will be required in the initial test plan, to help assure all possible operating sequences, malfunctions, and corrections have been verified. The plan should be revised as the inspection and testing proceeds depending on the acceptability of the results.) Certain failures may require retesting of component and system operation. When wiring problems are found and repaired, all affected wiring terminations should be re-verified for their proper connections. The success of a test program and its use to support an on-going maintenance program also greatly depends on the attention given to development and review of the test records and reports by the testing and operations personnel and system management. To have an effective program it is imperative that test data be complete, organized, and readily available. Forms should be developed with the test procedures which list the required test procedure, test sequence, test instrument, test data and, most importantly, acceptable test values for each result. (Examples of test forms are found in each applicable chapter. These forms should only be used as samples.) A remarks area should be included to list any pass or fail, comments, recommendations for repair and retest, additional follow-up testing required during the next steps of the system operation, and helpful information for future testing. Note that the data collected and recorded will be used over the years to analyze trends for equipment deterioration or help determine causes for system malfunctions, so if the records are not complete and correct a large part of the usefulness of a good test program is lost. The technical requirements for a test program can be stated as follows.

a. Survey of system equipment. An accurate and complete description of a power system and its equipment is required to develop a test program. This will include written system description, one-line diagrams, short circuit and coordination studies, three line diagrams, control logic diagrams, schematic logic diagrams, cable block and interconnecting diagrams, equipment physical and wiring drawings, equipment manuals, and auxiliary system manuals and drawings for support systems such as lighting, fire protection, backup power, building and building services, etc.. These documents serve to depict the design and operation of the system for use during installation, testing, startup, operation, and maintenance. Various standards groups such as the Institute of Electrical and Electronics Engineers (IEEE) and National Electrical Manufacturers Association (NEMA) have developed standards for these materials. Typical drawings and their definitions are as follows:

(1) One-line (single-line) diagram. Shows, by means of single lines and graphic symbols, the flow of electrical power or the course of electrical circuit symbols, and how they are connected. In this diagram, physical relationships are usually disregarded.

(2) Block diagram. Shows a group of interconnected blocks, each of which represent a device or subsystem.

(3) Schematic (elementary) diagram. Shows all circuits and device elements of the equipment. This diagram emphasizes the device elements and their functions, and it is always drawn with all devices shown in deenergized mode.

(4) Control sequence (truth-table) diagram. Shows a description of the contact positions, connections, that are made for each position of control action or device.

(5) Wiring diagram (connection diagram). Locates and identifies electrical devices, terminals, and interconnecting wires in an assembly. This diagram may show interconnecting wiring by lines or terminal designations.

(6) Interconnection diagram. Shows only the external connection between controllers and associated equipment or between various housing units of an assembly of switchgear apparatus.

(7) Circuit layout and routing diagram. Shows the physical layout of the facility and equipment and how the circuit to the various equipment is run.

(8) Short-circuit coordination study. Electrical power system data, diagrams, and drawings are needed during maintenance and testing of electrical equipment. This may involve information and data relating to protective devices and relays. Such data are usually found in a short-circuit coordination study and usually encompass all the short-circuit values available in the power system, relays, and trip device settings. Normally, this study is performed during the construction phase of the facility. It would be much more desirable to perform this engineering study as part of the initial facility design, and then validate it during the construction phase to assure that equipment and values specified have been met. When accepting the facility, this study data should be used as a benchmark, and any changes that may have been made during construction in the system should be incorporated to update the study for future references.

b. Listing of critical system equipment. The major equipment of a system is vital to its operation and failure of this equipment could be a threat to personnel and system operation, i.e., potential single point failures. From a review of the system documentation, especially the single line diagram, a list of critical equipment and the order in which the items should be inspected, tested, and energized should be developed. From this list, the plan and schedule for the test program can be developed. Normally the listing in order of criticality of the equipment is from the normal power source into the system with onsite sources failing after the main power source and distribution equipment. The listing may be difficult to prepare as it will vary for each system, and therefore a team from system engineering, operations, and maintenance may be required. This will also serve to provide the operations and maintenance personnel an opportunity to review the system during the early stages of a project, which helps them in the performance of their work.

c. Steps for the test program. A test program will commence after completion of installation and will usually include field inspection and installation checks, de-energized component testing, verify instrument and relay operation and calibration, visual check of all wiring, continuity checking of control circuits, energized functional testing of control circuits, megger testing of power circuits, test of power circuits phasing, energizing of equipment, and service testing. If problems are found during the testing; an analysis should be performed, and a repair and retest should be performed that is approved by the commissioning authority, manufacturer, engineer, and system operator. Many of these initial tests will be repeated periodically as part of the system maintenance program depending on the load conditions, duty cycle, environmental conditions, and the critical nature of the equipment. Because of this, the completeness and clarity of the test reports is important as they supply baseline data for comparison with the results of the maintenance tests.

d. General definition of test steps. Prior to testing, overall completion of installation should be verified including setting, wiring, grounding of the equipment, and conditioning of the overall area, i.e., clean complete site to work in. This is considered a pretest. Note: all of the items below should be

performed in strict accordance with the drawings, systems operations documents, systems operation and maintenance manuals (provided by contractor), and the engineer's and manufacturer's instructions for each piece of equipment. The manufacturer typically provides the instructions in the form of diagrams indicating how to connect the test instruments as well as charts indicating acceptable and unacceptable values. The engineer's instructions will be found in the system specifications and drawings, and the manufacturer's instructions are found in the equipment manuals and drawings. IEEE, NEMA, National Fire Protection Association (NFPA), and other standards also include acceptable procedures for the performance of the tests. As the acceptance tests and energization is performed; failures and repairs, availability of equipment and personnel, schedules, weather, and other items may cause the delay or non-performance of a test. In any of these cases, the missing, failed, newly required, or postponed test should be noted in the test documentation along with the reason for missing the test and the technical consequences. An evaluation should be made as to whether the system can be energized without this test noting the possible effect on safety, personnel, and equipment operation; and noting when or even if the test should be performed in the future. If the test yet to be performed or needs to be performed to prove the adequacy of a repair, the test should be scheduled with the system operations personnel as part of an on-going maintenance program.

(1) Field inspection and installation checks. Include inspection of impact recorders, verification of removal of shipping braces, inspection of installation against drawings and nameplates, inspecting of components for damage and cleanliness, inspection of insulators for cracking, inspection of anchorage and grounding, sizing check of fuses and breakers, alignment and adjustment checks, mechanical operation and interlock checks, lubrication application, verification of insulating liquid or gas level or pressure, and verification that local safety equipment is in place.

(2) De-energized component testing. Include pressure and level checks, megger and insulation resistance testing of equipment and connections including grounds, turns ratio measurements, polarity tests, insulating liquid dielectric and moisture testing, power factor or dissipation factor tests, overpotential tests, contact resistance measurements, operation time travel analysis, battery and cell voltage measurements, charger/UPS (uninterruptible power supply)/generator current and voltage measurements, and equipment/systems impedance or resistance tests.

(3) Verification of instrument and relay operation and calibration. Include verification of auxiliary device operation, calibration of instruments and relays, functional testing of individual instruments/gauges/alarms/relays/limit switches/etc.

(4) Visual check of all wiring. Include visual inspection of all wiring against the schematic and wiring, both internal and external, diagrams.

(5) Continuity checking of control circuits. Include continuity and voltage testing of all control circuits against schematic diagrams.

(6) Energized functional testing of control circuits. Include energizing of control circuits and checking all remote and local close/trip operations, protective relay operations, safety and interlock operations, and all process and communication operations.

(7) Megger testing of power circuits. Include megger testing of power, current transformer, and potential transformer buses and cables after connection.

(8) Phase out testing of power circuits. Include primary and/or secondary injection testing for circuit impedance and polarity checks.

(9) Energizing of equipment. Include energizing of equipment in specific order after all above testing is complete and evaluated.

(10) Service testing. Include measurement of value and relationship of power, potential, and current on sources, buses, feeders, and neutrals in the power system.

(11) Post acceptance tests. Include on-going maintenance and operation tests, corrective action tests, and deferred testing.

e. Reports, forms, and records. Accurate and complete reports, forms, and records should be developed and kept updated after the testing for the equipment and the system for initial evaluation of the results before energization and on-going evaluation by operations and maintenance. Analysis of the data and results should provide a decision to startup and a guide for future maintenance requirements and its cost. Figures should be kept for the time, cost, and equipment used for each test for input to the development of the maintenance program. Care should be taken to ensure that extraneous information does not become part of the record, because record keeping might hamper future use. Test reports giving test description and basic procedure, components, drawing and other document references, test circuit diagrams, test equipment model and age and calibration date, special tools required, test forms with results filled in, time to run the test, acceptance criteria, failure or unusual event information, recommended repair, and when the test should be performed again for equipment maintenance should be developed for the tests. Summary logs developed from the information can be used for developing and scheduling an on-going maintenance program. Forms should be used to document the results of testing procedures. They should be detailed and direct, but simple and durable enough to be used in the field. The forms should be used as input to the development of the test reports. A well designed form will contain checklist information for inspections, test procedures, safety and special precautions, required equipment and tools, reference drawings and manuals, acceptance criteria, estimated time to perform the test, and remarks/event recording area. Sample forms for basic equipment and tests are attached.

f. Special precautions and safety. Many tests on electrical equipment involve the use of high voltages and currents that are dangerous, both from the standpoint of being life hazards to personnel and because they are capable of damaging or destroying the equipment under test. Adequate safety rules should be instituted and practiced to prevent injury to personnel, both personnel who are performing the tests and others who might be exposed to the hazard. Also, the test procedures used should be designed to ensure that no intentional damage to equipment will result from the testing process. It should be recognized, as the name implies, that over-potential or high-potential testing is intended to stress the insulation structure above that of normal system voltage. The purpose of the test is to establish the integrity of the insulation to withstand voltage transients associated with switching and lightning surges and hence reduce the probability of in-service equipment failures. Direct voltage over-potential testing is generally considered a controlled, nondestructive test in that an experienced operator, utilizing a suitable test set, can often detect marginal insulation from the behavior of measured current. It is therefore possible, in many cases to detect questionable insulation and plan for replacement without actually breaking it down under test. Unfortunately, some insulations might break down with no warning. Plans for coping with this possibility should be included in the test schedule. Low-voltage insulation testing can generally be done at the beginning of the planned maintenance shutdown. In the event of an insulation failure under test, maximum time would be available for repair prior to the scheduled system start-up. Equipment found in wet or dirty condition should be cleaned and dried before high-potential testing is done or a breakdown can damage the equipment. Low-voltage circuit breakers, which require very high interrupting ratings, are available with integral current-limiting fuses. Although the fuse size is selected to override without damage to the time-current operating characteristics of the series trip device, it is desirable to bypass or remove the fuse prior to applying simulated overload and fault current. If a testing program is to provide meaningful information relative to the condition of the equipment under test, then the person evaluating

the test data must be ensured that the test was conducted in a proper manner and that all of the conditions that could affect the evaluation of the tests were considered and any pertinent factors reported. The test operator, therefore, must be thoroughly familiar with the test equipment used in the type of test to be performed and also sufficiently experienced to be able to detect any equipment abnormalities or questionable data during the performance of the tests.

g. Test equipment. It is important that in any test program the proper equipment is used. The equipment should be calibrated, in good condition, and used by qualified operators. Any test equipment used for calibration shall have twice the accuracy of the equipment to be tested. Care should be taken to use a quality or regulated power source for the equipment as voltage, frequency, and waveform variation can produce invalid results. All equipment should be operated in accordance with its instruction manual.

h. Sample Commissioning (Cx) Plan: The primary intent of this technical manual is to propose different procedures that should be considered when commissioning a new electrical system and /or component. The figures, forms, and tests in this manual are only examples of the concepts that should be implemented when developing a commissioning plan. The following paragraphs discuss an example of commissioning program planning stages that can be used to commission a new system as shown in figure 2.1 (Commissioning Plan Example). The time period in which a commissioning process begins determines what steps in the planning stages are considered:

(1) Initial commissioning (kick-off) meeting. The first commissioning meeting may start as early as before a contract is awarded or as late as after the system has been installed (before it is turned over to the customer). The participants in the meeting should include customer, government contractor personnel, participating engineers, commissioning personnel (may be an independent commissioning contractor or government engineer), general contractor, and electrical and mechanical sub-contractors. Topics of meeting should include areas of responsibility, expectations, overall presentation of system, methodology, potential problem areas, etc. The participants should be all considered "part of a team".

(2) Review initial statement of work (SOW). All participants should review the SOW that describes the requirements of the commissioning process. The customer (or designated authority) should have the ultimate control where decisions are required.

(3) Review drawing submittals. After the systems are installed, drawings should be submitted for review and comment. Sometimes the review may be before systems are installed. Care must be taken to verify that the drawings submitted reflect the actual installed system.

(4) Approval meeting. After the SOW and drawing submittals have been submitted, reviewed, comments made, and comments incorporated, approval of documents should be provided.

(5) Systems operation document (SOD)/systems operation and maintenance manual (SOMM) document. Prime contractor should provide a SOD or SOMM. These documents are required in order to develop specific commissioning tests.

(6) Submit functional performance tests (FPTs). System/component tests or FPTs should be developed from submitted drawings, SODs and SOMMs. The tests should include large

component testing (i.e. transformers, cable, generators, UPS), and how components operate as part of the total system. The test should be developed by the commissioning authority. The commissioning authority should not be the installation contractor (or sub-contractor).

(7) Quality assurance. As the equipment/components/systems are installed quality assurance procedures should be administered to verify components are installed in-accordance with minimum manufacturers recommendations, safety codes, and acceptable installation practices. Quality assurance discrepancies should be identified and added to a "commissioning action list" that must be rectified as past of the commissioning program. These items would usually be discussed during commissioning meetings. Discrepancies are usually identified initially by visual inspection.

(8) Review FPTs. The tests should be reviewed by the customer, electrical contractors, quality assurance personnel, maintenance personnel, etc (the commissioning team). Areas of concern should be 1) are all functions of the system being tested, 2) are all major components included, 3) do the tests reflect the system operating documents, 4) do the tests make sense, etc.

(9) Make changes to FPTs. This is where corrections, questions answered, and additions made will be implemented. This will be done by the commissioning authority.

(10) FPT approval. After the changes are made to the FPTs they will again be submitted to the commissioning team. When it is acceptable the customer or his/her designated approval authority should approve the FPTs. It should be noted that even though the FPT is approved, problems that arise during the test (or areas not covered) should be addressed.

(11) Systems operate. The FPTs can be implemented as various systems become operative (i.e. test the generator system) or when the entire system is installed. However the final "pull the plug" test will be performed after all systems are completely installed. If the FPTs are implemented by the electrical contractor (or sub-contractor) then a witness should initial each step of the test. The witness should not be employed directly or indirectly by the electrical contractor.

(12) Customer receives system. After all tests are completed (including the "pull the plug" test) the system should be turned over to the customer.

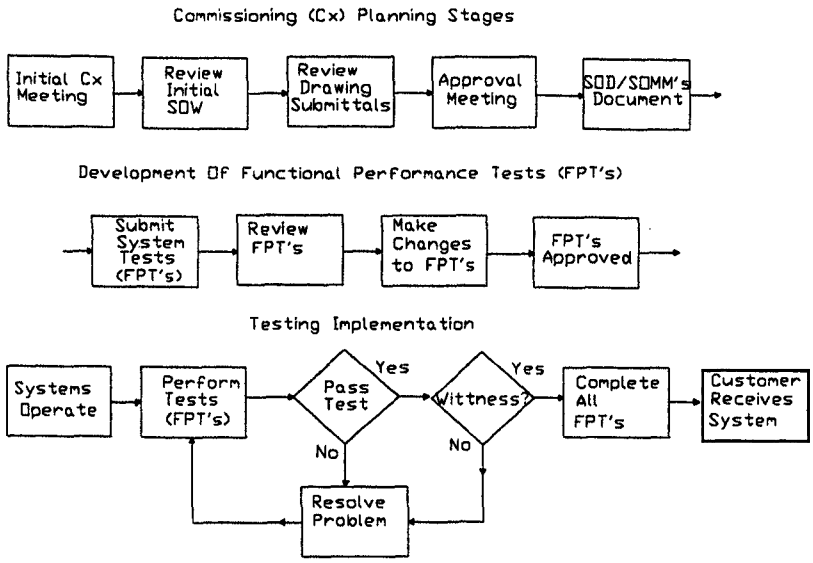

Figure 2-1. Sample of a commissioning plan

2-3. Types of testing methods

Types of testing methods include the four categories of tests as well as the tests themselves.

a. Categories of tests. There are four categories of tests for electrical equipment; factory, acceptance, routine maintenance, and special maintenance. Factory tests are performed at the factory to prove the equipment was manufactured properly and meets specific design parameters. Commissioning tests, the main subject of this document, are also proof tests performed on new equipment and systems usually after installation and before energization. They are run to determine whether the equipment is in compliance with specifications, to establish benchmarks for future tests, to determine the equipment was installed correctly and without damage, and to verify whether the equipment meets its intended design operation and limits. Routine and special maintenance tests are run after the equipment has been in service for a certain amount of time to determine the degree of deterioration of certain equipment physical parameters as operating time increases. Routine tests are performed on a periodic basis and special tests are performed on defective equipment to help determine the cause of a failure and/or the extent of the damage. The same type of tests and measurements are performed for all of the categories using different voltage values. The acceptance tests are usually run at 80% and the maintenance tests are usually run at 60% of the factory test voltage values to help indicate deterioration without being destructive.

b. Types of testing methods. The testing of electrical power system equipment involves checking the insulation adequacy, electrical properties, protection and control, operation, and other items as they relate to the overall system. Some of these checks are accomplished using de-energized component tests, instrumentation and relay operation and calibration tests, energized functional testing of control circuits, megger testing of power circuits, phase out testing of power circuits, and service testing.

2-4. Insulation testing

Insulation can either be solid, liquid, or gaseous dielectric materials that prevent the flow of electricity between points of different potential. Insulation testing is performed to determine the integrity of the

insulation. This usually consists of applying a high potential voltage to the item and measuring the leakage current that may flow to ground. Excessive leakage current is an indication of dielectric breakdown and/or impending failure. Insulation may weaken over time at a rate tightly related to the operating time and temperature of operation. Therefore, these tests are run periodically to track the insulation deterioration. Insulation testing, the most common electrical testing performed, can be performed by applying a direct current (dc) or alternating current (ac) voltage. The type and value of the voltage determines whether the test is considered non-destructive or destructive. The higher the voltage, the more destructive the test. Usually destructive tests are only run one time in the factory to verify the initial strength of the insulation, and non-destructive tests are run as acceptance and maintenance tests to measure deterioration from the original value. Both the dc and ac tests are "go no-go" tests. In addition, the dc test can indicate the amount of deterioration and forecast the remaining time for safe operation by comparing the leakage current and test voltage to values from previous tests.

a. Advantage of direct-current testing. Direct-current test is preferred on equipment whose charging capacitance is very high, such as cables. Direct-current voltage stress is considered much less damaging to insulation than ac voltages. The time of voltage application is not as critical with dc voltage as with ac voltage. The test can be stopped before equipment failure. Measurements can be taken concurrently. It is not necessary to make a separate insulation resistance test prior to making a dc over potential test.

b. Disadvantage of direct-current testing. The stress distribution for transformers, motors, and generator winding is different for dc voltage than for ac voltage. The residual charge after a dc voltage test must be carefully discharged. The time required to conduct a dc high-potential test is longer than for an ac high-potential test.

c. Direct-current (dc) testing. When a dc potential is applied across an insulation, the resultant current flow is composed of several components as follows:

(1) Capacitance-charging current. Capacitance-charging current is the current resulting from charge absorbed by the capacitor formed by the capacitance of the bushing. This current is a function of time which also depends on applied dc voltage, insulation resistance and the time constant of the circuit.

(2) Dielectric-absorption current. Dielectric-absorption current is the current that is absorbed and trapped in the dielectric during the charging of the piece of equipment and released after the equipment is discharged. This current can be calculated from test voltage, capacitance, and time. In air-cooled and hydrogen-cooled ac rotating machines, dielectric absorption varies with temperature.

(3) Surface leakage current. The passage of current over the surface of an insulation rather than through its volume is surface leakage current. In measuring insulation resistance of armature and field windings in rotating machines (rated 1 hp, 750 W or greater), a high surface leakage current is usually caused by moisture or another type of partly conductive contamination present in the rotating machine.

(4) Partial discharge (corona current). This is a type of localized discharge resulting from transient gaseous ionization in an insulation system when the voltage stress exceeds a critical value. Partial discharge is not desirable and should be eliminated. It is caused by overstressing of air at sharp corners of the conductor due to high test voltage. In shielded power cable systems (rated > 5 kV), humidity or wind can increase the corona current.

(5) Volumetric leakage current. The current that flows through the volume insulation itself is volumetric leakage current. It is the current that is of primary interest in the evaluation of the condition of the insulation. In shielded power cable systems (rated > 5 kV), humidity, condensation, and precipitation on the surface of a termination can increase surface leakage current and volumetric leakage current. Surface leakage current and

volumetric current added together is the quotient of the applied dc voltage and insulation resistance. In large ac rotating machines rated 10,000 kVA or greater and rated 6000 V or higher, moisture, on the end windings, increases surface leakage current and volumetric leakage current especially when dirt is also on the winding. Since the insulation may weaken over time, age may cause an increase in the various currents during testing.

d. Insulation-resistance (megger) testing. For equipment containing electronic components, megger testing must not be performed. However, this equipment should be tested according to manufacturer specifications. In an insulation-resistance test, an applied voltage, from 600 to 5000 volts, supplied from a source of constant potential, is applied across the insulation. The usual potential source is a megohmeter, also known as a megger, either hand or power operated that indicates the insulation resistance directly on a scale calibrated in megohms. A megohmeter that is a hand cranked, a rectifier-type, or battery-operated instrument is suitable for testing equipment rated up to 600 volts. For equipment rated over 600 volts, use of a 1000-volt or 2500-volt motor-driven or rectifier-type megohmeter is recommended for optimum test results. The quality of the insulation is evaluated based on the level of the insulation resistance. The insulation resistance of many types of insulation is variable with temperature, so the data obtained should be corrected to the standard temperature for the class of equipment under test. Published charts similar to table 2-1 are available for this purpose. The megohm value of insulation resistance obtained will be inversely proportional to the volume of insulation being tested. For example, a cable 1000-ft (304.8 m) long would be expected to have one-tenth the insulation resistance of a cable 100-ft (30.48 m) long if all other conditions were identical. The insulation-resistance test is relatively easy to perform and is a useful test used on all types and classes of electrical equipment. Its main value lies in the charting of data from periodic tests, corrected for temperature, over the life of the equipment so that deteriorative trends might be detected.

Table 2-1. Recommended minimum insulation resistance values at 40°C (all values in MΩ).

Minimum Insulation Resistance after 1 minute (MΩ)	Test specimen
kV + 1 (Example: 15 kV machine is 15 + 1 = 16 MΩ)	For most windings made before about 1970, all field windings, and others not described below
100	For most dc armature and ac windings built after about 1970 (form-wound coils)
5	For most machines with random-wound stator coils and form-wound coils rated below 1 kV

Notes: kV is the rated machine terminal to terminal voltage, in rms (root mean square) kV.
Recommended minimum insulation resistance values above, in megohms, at 40°C of the entire machine winding for overvoltage testing or operation of ac and dc machine stator windings and rotor windings.
From IEEE Std. 43-2000. Copyright © 2000 IEEE. All rights reserved.

e. Dielectric absorption testing. In a dielectric-absorption test, a voltage supplied from a source of constant potential is applied across the insulation. The test voltage used may have to be significantly higher than the insulation-resistance test in order to obtain measurable current readings. The potential source can be either a meg-ohmmeter, as described above or a high-voltage power supply with an ammeter indicating the current being drawn by the specimen under test. The voltage is applied for an extended period of time, from 5 to 15 minutes, and periodic readings are taken of the insulation resistance or leakage current. The test data is evaluated on the basis that if an insulation is in good condition, its apparent insulation resistance will increase as the test progresses. Unlike the insulation-resistance test, the dielectric-absorption test results are independent of the volume and the temperature of the insulation under test. For the dielectric absorption test, the values recorded at each one minute interval are plotted on log-log paper with coordinates for resistance versus time. The slope of the resulting curve gives a good indication of the insulation condition. A good insulation system will have a

slope that is a straight line increasing in respect to time. The characteristic slope of a poor insulation system will be a curve that flattens out with respect to time.

f. Polarization index testing. The polarization index is a specialized application of the dielectric absorption test. The index is the ratio of insulation resistance at two different times after voltage application, usually the insulation resistance at 10 minutes to the insulation resistance at 1 minute. The use of polarization-index testing is usually confined to rotating machines, cables, and transformers. A polarization index less than 1.0 indicates that the equipment needs maintenance before being placed in service. References are available for polarization indexes for various types of equipment as well as in table 2-2. Acceptance testing specifications for Electrical Power and Distribution Equipment and Systems NETA 1999 and Recommended Practice for Testing Insulation Resistance of Rotating Machinery (IEEE Std. 43-2000) are references available for polarization indexes for various types of equipment. The polarization index test lasts for 10 minutes. The insulation resistance is recorded after 1 minute, then again after 10 minutes. The polarization index is the quotient of the 10-minute and 1 minute readings as shown in the following equation:

$$PI = R_{10}/R_1 \text{ (dimensionless)}$$

Where:

PI = polarization index
R = resistance.

For polarization indexes in transformers an acceptable value would be 2 or higher, values between 2 and 1 indicate marginal condition, and values below 1 indicate poor condition. After insulation resistance readings have been made, the test voltage is returned to zero and the insulation is discharged.

g. High-potential testing. A high-potential test (hi-pot) consists of applying voltage across an insulation at or above the dc equivalent of the 60-Hz operating crest voltage. The dc equivalent of the 60-Hz operating crest voltage is calculated using the following equation:

$$Vac = Vdc/\sqrt{2}$$

Where:

Vdc is the equivalent dc voltage
Vac is the operating crest ac voltage

The hi-pot test can be applied either as a dielectric-absorption test or a step-voltage test. DC high potential tests are "go no-go" tests. The cable is required to withstand the specified voltage for the specified time duration. These tests will normally reveal major problems due to improper field handling, improperly installed accessories or mechanical damage. Recommended test voltages are given in standard tables for dc and ac. To perform the dc Hi-pot test the input voltage to the test set should be regulated. The current-sensing circuits in test equipment shall measure only the leakage current associated with the cable under test and shall not include internal leakage of the test equipment. Record wet-bulb and dry-bulb temperatures or relative humidity and temperature. The wet bulb temperature is defined as the temperature given by a thermometer bulb which is covered with an absorbent material (linen wet with distilled water) and exposed to the atmosphere so that evaporation will cool the water and the thermometer bulb. The dry-bulb temperature is defined as the temperature of the atmosphere given by an ordinary thermometer. Test each section of cable individually with all other conductors grounded. All shields must also be grounded. Terminations shall be adequately corona-suppressed by guard ring, field reduction sphere, or other suitable methods as necessary. Precaution should be taken to insure that the maximum test voltage does not exceed the limits for terminations specified in IEEE Standard 48 or manufacturers specifications. When applied as a dielectric-absorption test, the maximum voltage is applied gradually over a period of from 60 to 90 seconds. The maximum voltage is then held for 5 minutes with leakage-current readings being taken each

minute. In cables, high ambient temperature or humidity at the ends of improperly prepared cables can raise the dc leakage current to many times its normal value. When applied as a step-voltage test, the maximum voltage is applied in a number of equal increments, usually not less than eight, with each voltage step being held for an equal interval of time. A typical voltage versus time graph as shown in figure 2-2. The time interval between steps should be long enough to allow the leakage current to reach stability, approximately 1 or 2 minutes. A leakage-current reading is taken at the end of each interval before the voltage is raised to the next level.

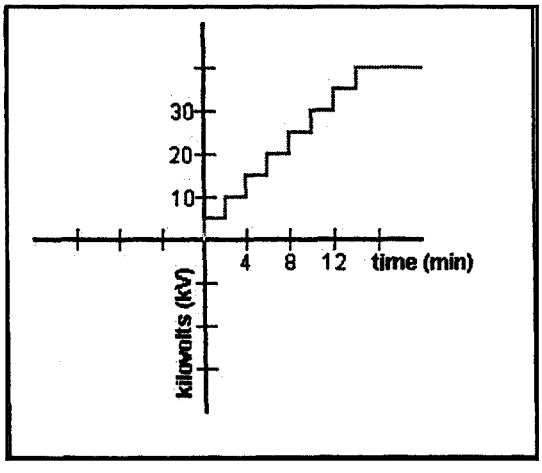

Figure 2-2. Step-voltage versus time

A plot of test voltage versus leakage current or insulation resistance is drawn as the test progresses. A nonlinear increase in leakage current can indicate imminent failure, and the test should be discontinued. See figure 2-3.

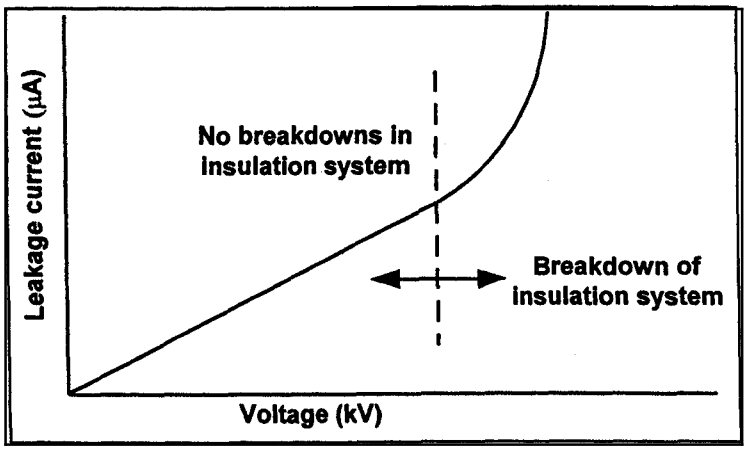

Figure 2-3. Step-voltage high-potential test current

After the maximum test voltage is reached, a dielectric absorption test can be performed at that voltage, usually for a 5-minute period.

h. AC high-potential testing. Alternating-current high-potential tests are made at voltages above the normal system voltage for a short time, such a 1 minute. The test voltages to be used vary depending on whether the device or circuit is low or high voltage, a primary or control circuit, and whether it was tested

at the factory or in the field. Manufacturers' instructions and the applicable standards should be consulted for the proper values.

i. Insulation power-factor testing. The power factor of an insulation is a measure of the energy component of the charging current. Power-factor testing is used to determine the power factor of an insulation system. Power-factor testing is a useful tool in evaluating the quality of insulation in power, distribution, and instrument transformers; circuit breakers; rotating machines, cables; regulators; and insulating liquids. The equipment to be tested should be isolated from the rest of the system, if practical, and all bushings or terminations should be cleaned and dried. The test should be conducted when the relative humidity is below 70 percent and when the insulation system is at a temperature above 32°F (0°C). The test equipment used should be such that the power factor or dissipation factor can be read directly or such that the charging volt-amperes and the dielectric losses can be read separately so that a ratio might be computed. The test equipment should also have sufficient electromagnetic interference cancellation devices or shielding to give meaningful test results even when used in an area of strong interference, such as an energized substation. Electromagnetic interference distorts the readings, yielding incorrect values. The desired measurements should be performed following the operating instructions supplied with the test equipment. The lead connections may have to be changed several times, depending on the complexity of the apparatus and test equipment. A meaningful evaluation will include comparison to manufacturer's results taken at the factory and/or nameplate data. On transformer tests, obtain the power factor of each winding with respect to ground and each winding with respect to each other winding. In addition, tests should be made of each bushing with a rated voltage above 600 volts, either using the power factor or capacitance tap if the bushing is so equipped or by use of a "hot-collar" test using a test electrode around the outside shell of the bushing. On higher voltage circuit breakers, the power factor of each line-side and load-side bushing assembly complete with stationary contact and interrupters, with the circuit breaker open, and each pole of the circuit breaker with the breaker closed should be obtained. On ac rotating machines, the neutral connection on the stator should be removed and a test of each winding with respect to the other two windings and ground should be obtained. For cables, the power factor of each conductor with respect to ground should be obtained and a hot-collar test should be made of each pothead or termination. Power-factor testing of insulating oil should be performed in accordance with American Society for Testing and Materials (ASTM) D 924, Standard Test Method for Dissipation Factor (or Power Factor) and Relative Permittivity (Dielectric Constant) of Electrical Insulating Liquids.

2-5. Switch/circuit breaker testing

In addition to the insulation testing mentioned above, for large switches and circuit breakers the following tests can be applied.

a. Circuit breaker time-travel analysis. This test, used on medium and high-voltage circuit breakers provides information as to whether the operating mechanism of the circuit breaker is operating properly. This test can be used to determine the opening and closing speeds of the breaker, the interval time for closing and tripping, and the contact bounce. The test provides information that can be used to detect problems such as weak accelerating springs, defective shock absorbers, dashpots, buffers, and closing mechanisms. The test is performed by a mechanical device that is attached to the breaker. One device, a rotating drum with a chart attached, is temporarily connected to the chassis or tank of the breaker. A movable rod with a marking device attached is installed on the lift rod portion of the breaker. As the breaker is opened or closed, the marking device indicates the amount of contact travel on the chart as the drum rotates at a known speed. With another available device, a transducer is attached to the movable rod, and the breaker operation is recorded on an oscillograph.

b. Contact-resistance testing. This test is used to test the quality of the contacts on switches and circuit breakers. A test set designed for this purpose is available with direct-scale calibration in microhms, capable of reading contact resistances of 10 microhms or less. An alternate method is to pass a

known level of direct current through the contact structures and to measure the dc millivolt drop across the contacts. The data obtained can then be converted to resistance by applying Ohm's Law. The alternate method requires a source of at least 100 amperes with a millivolt meter of approximately 0-20 mV range.

2-6. Transformer testing

Transformers are subject to the following tests in addition to the insulation testing mentioned above in paragraph 2-4. However, dry-type transformers would not be subject to fault-gas analysis and insulating liquid analysis due to the fact that these types of transformers usually feature a gaseous or dry compound insulating medium. Cast coil transformers, which are defined as a transformer with high-voltage coils cast in an epoxy resin, would also not be subject to fault-gas analysis and insulating liquid analysis due to the fact that the core and coils of these types of transformers are not immersed in an insulating liquid. Cast coil transformers are considered to be dry-type transformers.

a. Transformer turns-ratio and polarity tests. The turns-ratio test is used to determine the number of turns in one winding of a transformer in relation to the number of turns in the other windings of the same phase of the transformer. The polarity test determines the vectoral relationship of the various transformer windings. The tests are applicable to all power and distribution transformers. See figure 2-4 for a diagram of a typical fluid filled power transformers. Cast coil transformers are also subject to these tests. The turns-ratio test and the polarity test can be done on transformers of all sizes. The turns-ratio test is also commonly performed on instrument transformers. The test equipment used will ordinarily be a turns-ratio test set designed for the purpose, although, if not available, two voltmeters or two ammeters (for current transformers only) can be used. When two ac voltmeters are used, one is connected to the high-voltage winding and the other is connected to the low voltage winding. The high voltage winding is excited to a voltage not exceeding the rating of the voltmeter. Both voltmeters are read simultaneously. A second set of readings should be taken with the metering instruments interchanged. The values indicated should be averaged to calculate the ratio. A meaningful ratio measurement may be made using only a few volts of excitation. The transformer should be excited from the highest voltage winding in order to avoid possibly unsafe high voltages. Care should be taken during the application of voltage and during the measurement. It is important that simultaneous readings for both voltmeters be made. The voltmeters used should have accuracy's matching with the requirements of a 0.5 % ratio calculation. When a turns-ratio test is performed, the ratio should be determined for all no-load taps. If the transformer is equipped with a load-tap changer, the ratio should be determined for each load-tap changer position.

b. Fault-gas analysis. The analysis of the percentage of combustible gases present in the nitrogen cap of sealed, pressurized oil-filled transformers can provide information as to the likelihood of incipient faults in the transformer. Fault-gas analysis can be performed on mineral-oil-immersed transformers of all sizes. When arcing or excessive heating occurs below the top surface of the oil, some oil decomposes. Some of the products of the decomposition are combustible gases that rise to the top of the oil and mix with the nitrogen above the oil. The test set for this test is designed for the purpose. A small sample of nitrogen is removed from the transformer and analyzed.

c. Insulating-liquid analysis. Insulating-liquid analysis can be performed in the field on oil-immersed power transformers of all sizes. Regular tests, on a semiannual basis, should be made on insulating oils and askarels. Samples should be taken from the equipment and tested in accordance with the manufacturer's instructions.

2-7. Rotating machine testing

The tests described below are for rotating machines such as motors and generators. These tests are applied based on the horsepower and kVA rating of the machine.

a. Insulation-resistance (megger) testing. The insulation resistance test as described in paragraph 2-4d is also applicable to rotating machines. This testing procedure applies to armature and rotating or stationary field windings. If the insulation resistance is below the established minimum, circuit components should be tested separately until the low insulation reading is located. Insulation-resistance history based on tests conducted on new motors or after rewinding, cleaning, or from recorded data made under uniform conditions form a very useful basis for interpretation of a machine winding condition. When comparing records of periodic tests any persistent downward trend is an indication of insulation trouble even though the values might be higher than the recommended minimum safe values.

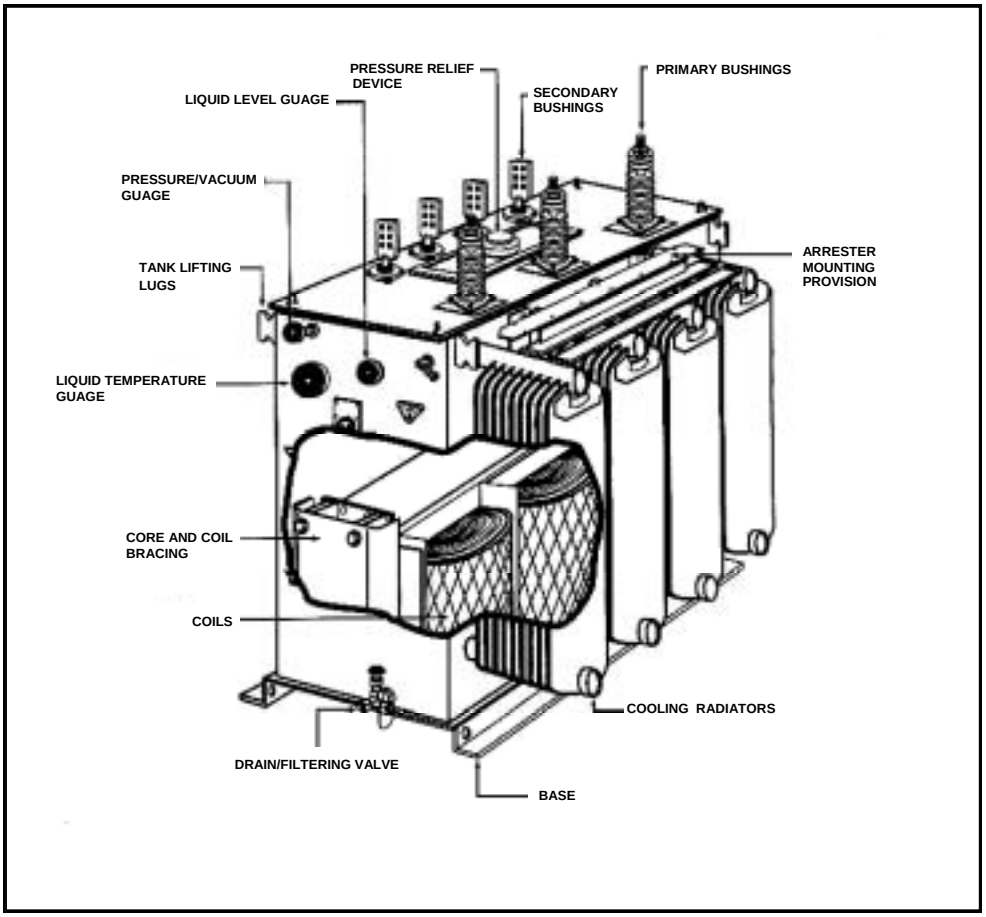

Figure 2-4. Power transformer diagram
(Reprinted from Department of the Army TM 5-686. Power Transformer Maintenance and Acceptance Testing 16 November 1998).

b. Dielectric-absorption testing. A dielectric absorption test for a rotating machine is performed as described in paragraph 2-4e. A more complete and preferred test than the insulation resistance test, the dielectric absorption test applies the voltage for 10 minutes or more to develop the dielectric-absorption characteristic. The curve obtained by plotting insulation resistance against time gives a good indication of moist or dirty windings. A steady rising curve is indicative of a clean, dry winding. A quickly flattening curve is the result of leakage current through or over the surface of the winding and is indicative of moist or dirty winding. If facilities are not available for a 10-minute test, a polarization index test can be performed by taking readings at 30 and 60 seconds. The ratio of the 60-to-30-second

or the 10-to-1-minute ratio will serve as an indication of the winding condition. Table 2-2 lists recommended acceptable values.

Table 2-2. Recommended minimum values of polarization index for all machine components insulation classes.

Thermal Class Rating	Minimum P.I.
Class 105	1.5
Class 130	2.0
Class 155	2.0
Class 180	2.0

The Polarization Index test is not applicable to noninsulated field windings (See IEEE Std. 43-2000 Section 12.2.1).
Note: The numbers in the thermal class rating are the hot-spot temperatures in degrees centigrade of the rotating machine. If the 1 min insulation resistance is above 5000 MΩ, the calculated P.I. may or may not be an indication of insulation condition and is therefore not recommended as an assessment tool.

From IEEE Std. 43-2000. Copyright © 2000 IEEE. All rights reserved.

c. *Over-potential testing.* Overvoltage tests are performed during normal maintenance operations or after servicing or repair of important machines or during commissioning. Such tests, made on all or parts of the circuit to group, ensure that the insulation level is sufficiently high for continued safe operation. Both ac and dc test equipment are available. The test overvoltages that should be applied will depend on the type of machine involved and level of reliability required from the machines. However, it should be of sufficient magnitude to search out weaknesses in the insulation that might cause failure. Standard ac over-potential test voltage when new is twice rated voltage plus 1000 volts ac. The dc over potential test is performed by applying a voltage and measuring the leakage current. The voltage applied during the acceptance test is a function of the equipment voltage rating as shown by the following equation:

dc acceptance test voltage in kV = 1.6[.8(2E + 1,000)] where E is the rated voltage in kV.
dc maintenance test voltage in kV = 1.6[.6(2E + 1,000)] where E is the rated voltage in kV.

These values for test voltages are given in *A Stitch in Time, Manual on Electrical Insulation Testing for the Practical Man*, Biddle Instruments, 1981. The standard duration of the test is between 1 to 5 minutes. The dc acceptance test voltage is applied to each winding separately with the other windings grounded. The voltage is applied in steps. First one third of the dc acceptance test voltage is applied. Leakage current readings are taken at one minute intervals up to a maximum of ten minutes. Then the voltage is increased in 1 kV intervals recording the leakage current and applied voltage at each step. Sufficient time shall be allowed between steps for the leakage current to stabilize. The data shall be plotted leakage current versus applied test voltage. The plot will yield a smooth curve with a rising slope for a good insulation system. Any sudden changes in the curve characteristics are an indication of impending failure. A high-potential test made to determine the condition of the insulation up to a predetermined voltage level is difficult to interpret. It is common practice to compare known good results against test specimens to determine what is acceptable and what fails the test.

2-8. Protective relays

Protective relays are used to sense abnormalities and cause the trouble to be isolated with minimum disturbance to the electrical system and the least damage to the equipment at fault. Protective relays should be set and acceptance tested prior to being placed in service and tested periodically thereafter to ensure reliable performance. In a normal industrial application, periodic testing should be done at least

every 2 years. The person performing the test should be given the settings to be applied to each particular relay by the engineer. There are two types of protective relays addressed in this manual. The first types are solid state relays. These are electronic "black box" devices. As all electronic devices, solid state relays should never be subject to hi-pot or megger testing. They typically come equipped with internal testing capabilities. Any diagnostic tests shall be performed as indicated in the manufacturer's manual. The second type is induction disk relays. They are subject to the following tests.

a. Inspection. If recommended or desirable, each relay should be removed from its case (if relay design permits) for a thorough inspection and cleaning. If the circuit is in service, one relay at a time should be removed so as not to totally disable the protection. The areas of inspection are detailed in the manufacturer's instruction manual. These generally consist of inspection for loose screws, friction in moving parts, iron filings between the induction disk and permanent magnet, and any evidence of distress with the relay. The fine silver contacts should be cleaned only with a burnishing tool.

b. Settings. Prescribed setting should be applied or it should be ascertained that they have been applied to the relay.

c. Pickup test. In the case of a time-over-current relay, its contacts should eventually creep to a closed position with a magnitude of current introduced in its induction coil equal to the tap setting. The pickup is adjusted by means of the restraining spiral-spring adjusting ring. A pickup test on a voltage relay is made in much the same manner.

d. Timing test. A timing test should be made on most types of relays. In the case of a time-over-current relay, one or more timing tests are made at anywhere from two to ten times the tap setting to verify the time-current characteristic of the relay. One timing point should be specified in the prescribed settings. Tests should be made with the relay in its panel and case, and the time test run at the calibration setting.

e. Instantaneous test. Some protective relays are instantaneous in operation, or might have a separate instantaneous element. In this context, the term instantaneous means "having no intentional time delay." If used, the specified pickup on the instantaneous element should be set by test. Again referring to the relay used in the example above, at two times pickup, its instantaneous element should have an operating time of between 0.016 and 0.030 seconds.

f. Test of target and seal-in unit. Most types of protective relays have a combination target and seal-in unit. The target indicates that the relay has operated. The seal-in unit is adjustable to pickup at either 0.2 or 2.0 amperes. The pickup setting is established by the relay coordination study. The setting for the seal-in unit should be specified with the relay settings. It should be verified by test that the contacts will seal in with the minimum specified direct current applied in the seal-in unit.

g. Test of tripping circuit. A test should be made, preferably at time of testing the relays, to verify that operation of the relay contacts will cause the breaker to trip.

2-9. Ground system testing

In addition to the general component tests stated in the preceding paragraphs, there are tests to be performed on the system as a whole after the components are installed. They are as follows:

a. Equipment ground-impedance testing. This test is used to determine the integrity of the grounding path from the point of test back to the source panel or supply transformer. A low-impedance grounding path is necessary to facilitate operation of the overcurrent device under ground-fault conditions as well as

provide a zero voltage reference for reliable operation of computers and other microprocessor-based electronic equipment. Instruments are available to measure the impedance of the grounding path. When using these instruments, the user should remember that, although a high-impedance value is an indication of a problem, for example a loose connection or excessive conductor length, a low-impedance readout does not necessarily indicate the adequacy of the grounding path. A grounding path that is found to have a low impedance by the use of relatively low test currents might not have sufficient capacity to handle large ground faults. Ground loop or grounding conductor impedance cannot be measured reliably in situations where metallic conduits are used or where metallic boxes or equipment are attached to metal building frames or interconnected structures. Such situations create parallel paths for test currents that make it impossible to measure the impedance of the grounding conductors; or even to detect an open or missing grounding conductor. Visual examinations and actual checking for tightness of connections are still necessary to determine the adequacy of the grounding path.

b. Grounded conductor (neutral) impedance testing. On solidly grounded low-voltage system (600 volts or less) supplying microprocessor-based electronic equipment with switching power supplies, this test is used to determine the quality of the grounded conductor (neutral) from the point of test back to the source panel or supply transformer. The same instruments used to perform the equipment ground-impedance tests can be used to perform grounded conductor (neutral) impedance tests.

c. Grounding-electrode resistance testing. Grounding-electrode resistance testing is used to determine the effectiveness and integrity of the grounding system. Periodic testing is necessary because changes in soil temperature, soil moisture, conductive salts in the soil, and corrosion of the ground connectors cause variations in soil resistivity. The test set used will ordinarily be a ground-resistance test set, designed for the purpose, using the principle of the fall of potential of ac-circulated current from a test spot to the ground connection under test.

d. Neutral-current testing. Situations exist where it is possible for the neutral current of three-phase systems to exceed the ampacity of the neutral conductor in normal operation. This is usually due to unbalanced phase loading, nonsinusoidal load currents (harmonics), or a combination of the two. Also nonlinear loads, such as rectifiers, computers, variable speed drives, electrical discharge lighting fixtures, and switching mode power supplies, cause phase currents that are not sinusoidal. The problem can be detected using a true root mean square (RMS) ammeter to measure the current flowing in the neutral conductor. The use of an average responding ammeter calibrated to read the RMS value of a sine wave should not be used as it will not yield valid results when used on nonsinusoidal waveforms. If the neutral current is found to be excessive, the current in each phase should be measured to determine if an abnormal condition exists. If excessive neutral current exists and the phase currents are not excessive, harmonic content is the most likely cause. A means of analyzing neutral current containing harmonic components is through the use of a wave or spectrum analyzer.

CHAPTER 3

COMPONENT TESTING

3-1. Introduction to component testing

The component inspection and checks are the key to the success of any commissioning program. Each component of the system should be initially checked for damage, deterioration, and failures by a procedure using inspections and tests as defined by the specific equipment manufacturer. The equipment manuals from the manufacturer identify the minimum required receipt inspections, handling and installation procedures, drawing and wiring verification, de-energized and energized component tests, minimum testing baseline and report requirements for on-going maintenance, and requirements for repair and retesting if certain checks and tests produce unsatisfactory results. After the systems components are interconnected, the system should be checked, using de-energized and energized methods, to verify the proper interconnection and operation of the components including on/off control, system process interlocks, and protective relaying functions. Once these tests are complete, the system can be energized, and operational tests and measurements are performed. This chapter of the manual gives a typical listing of the commissioning test and testing procedures that are recommended (manufacturers' recommendations should always be incorporated into component testing) for each of the following system components before the interconnection and operation of the components as a system is verified and tested. The components/systems to be verified and tested are circuit switchers, transformers, switchgear – low voltage, switchgear – medium voltage, transfer switch, motors, ac/dc drives, generators, batteries, battery chargers, UPS systems, and cables. For equipment containing electronic components, megger testing must not be performed. However, this equipment should be tested according to manufacturer's specifications.

3-2. Circuit switchers

A circuit switcher is a device that consists of a disconnect switch and a circuit-breaking interrupter. They are used for switching and protecting equipment such as transformers, lines, cables, capacitor banks, and shunt reactors from small short circuit currents. The first step towards acceptance of any device is verification of nameplate data and equipment conditions. All the equipment shall be checked against nameplate, one-line, schematic, and wiring diagrams. All equipment shall be carefully examined upon receipt to ensure that no damage has occurred during shipment. Upon receipt a visual inspection of the circuit switcher and associated hardware shall be made including nameplate, parts, drawings, and condition. Any discrepancies should be sent to the manufacturer for a resolution. After installation, the circuit switcher shall be checked to ensure that it has been bolted to its permanent foundation, all shipping braces have been removed, and that it has been properly grounded. The alignment of the disconnect should be checked to ensure that the blade tongue contact enters the jaw contact on center, rotates fully and comes to rest within 1/8" of the stop. The interrupter action should be checked for proper operation as described in the operation manual. The circuit switcher shall be manually operated to check that the mechanism works smoothly and correctly. The contact surfaces should be checked for proper lubrication. The control wiring installation shall be checked per the drawings. The low pressure indicator should be checked by measuring the pressure in psig and recorded along with the ambient temperature at the time the measurement was taken and then comparing this value with the manufacturers data. Checks shall be made to insure that the grounding connections have been installed. Simulate a fault by activating the protective relay circuit and check electrical operation. Check key interlocks both mechanically and electrically. Testing shall include timing, contact resistance, contact part time, and charging motor

operation. Descriptions of these tests are found in paragraph 2-5. The timing test shall be performed at the normal operating voltage for both trip command and close command.

3-3. Transformers

There are two basic types of power transformers, oil-filled and dry-type. Both are subject to many of the same tests. Therefore, the following test procedures apply to both types unless otherwise noted. Since cast coil transformers are considered dry-type, the following tests also apply unless the test is noted to only apply to oil-filled transformers.

a. Inspection on receipt. A thorough inspection for the transformer shall be completed upon arrival and before unloading. This inspection shall include a detailed visual inspection of the external of the transformer. Since the largest transformer we are concerned with in this manual is 10 MVA, the transformers do not require impact recorder. The minimum size of transformer for impact recording is approximately 20 MVA. Oil-filled type transformers are typically shipped filled with either dry air or nitrogen. The pressure condition, nitrogen content, and dew point shall be measured before unloading of the transformer. A positive pressure should be maintained on nitrogen-blanketed transformers. The oxygen content should be less than one percent. The seals of the transformer shall be inspected to ensure that they are properly seated. For an acceptable transformer installation it is imperative that the foundation is level. This should be checked well in advance of receipt of the transformer. Upon completion of the equipment inspections, the transformer shall be unloaded and set into its final installation position. The shipping bracing shall be removed and it shall then be anchored to its foundation. The bolts (if used) securing the transformer to its foundation shall be checked to ensure that they are installed at the proper torque. For large transformers (above 20 MVA approximately), a visual inspection of the transformer internals shall be performed on air and oil-filled transformers filled with nitrogen. Transformers shipped filled with oil will not need internal inspections unless the electrical testing described below indicates a problem. Then the oil must be drained, inspection performed, and repair completed. After the repair is inspected, the transformer shall be filled with clean dielectric fluid in strict accordance with the manufacturer's instructions. The purpose of this internal inspection is to determine that no displacement has occurred in transit or during unloading. Items to be verified include the tap-changer, end braces and current transformers. This inspection must be performed with dry air in the main tank. If the transformer has been delivered filled with nitrogen, it must be evacuated from the tank replaced with dry air. Personnel performing the inspection must wear clean cotton clothing, mouth covers and oil-resistant, clean, rubber soled shoes that contain no metallic parts. All transformer nameplates, wiring, and accessories shall be visually inspected and compared against the drawings. These accessories include but are not limited to radiators, fans, bushings, and instrument controls.

b. Installation checks. After the preceding inspections have been completed, the transformer shall be assembled. Transformer assembly includes but is not limited to, mounting of radiators, fans, bushings, thermometers, oil level indicators, relays and expansion tank. Transformer assembly must be in accordance with manufacturer's instructions and design drawings. After all of the accessories have been installed, protection circuits shall be wired and checked. A pressure test can now be performed and the transformer filled with oil. The alarm, control, and trip settings on temperature indicators shall be inspected to verify that they are set as specified. The cooling pumps shall operate correctly, and the fan and pump motors shall have correct overcurrent protection. Operation of all alarm, control, and trip circuits from temperature and level indicators, pressure relief device, and fault pressure relays shall be checked. Liquid level in all tanks and bushings shall be verified. Grounding shall be verified. Once the above is complete the following tests shall be performed on insulation resistance, dielectric absorption, polarization index, transformer turns ratio test, and power factor test. Descriptions of these tests are found in paragraphs 2-4 and 2-6. Once completed and passed, the transformer is ready for energization.

3-4. Switchgear – medium voltage

The first step towards acceptance of any device is verification of nameplate data. The nameplate on all equipment shall be checked against one-lines and schematics. The switchgear shall be checked for completeness of assembly. All equipment shall be carefully examined upon receipt to ensure that no damage has occurred during shipment. A visual inspection of the area where the switchgear is installed should be performed to confirm that there is adequate aisle space at the front and rear of the equipment for proper ventilation, service and maintenance of the equipment. The switchgear should be checked to insure it is properly anchored to its foundation. Visually inspect that the high voltage connections are properly insulated. Electrically disconnecting contacts, machined parts, shutter, etc., should be checked for lubrication and operation. The breaker alignment and manual operation shall be checked. All blocking, supports and other temporary ties should be removed from breakers, instruments, relays, etc. Verify proper fuses are correctly placed. Verify proper voltage and phase connections. Verify correct component and installation of potential and current transformers (PTs and CTs) and control fuse size and check continuity. Also check PT and CT polarity and transformer turns ratio. Temporary wiring jumpers should be removed. Verify ground connections properly made. Verify incoming primary and secondary connections properly made and checked for shorts or undesired grounds. Verify all equipment that has been removed during assembly has been replaced. Verify relays are coordinated with other relays and protective devices on the system. Refer to relay instructions before making any adjustments. Consult local utility before making any connections to the power supply. Verify storage battery fully charged and provided with charger. Interlocks performing properly. Circuit breakers should be checked and prepared per instruction book. All filters in vent areas are clean and free of shipping or construction material. Once complete, the insulation resistance and dc hi pot test should be performed. Descriptions of these test are found in paragraph 2-4. Before performing insulation tests precautions should be made to eliminate damage to electronic controls/sensitive equipment attached to the bus. The insulation resistance test should be made on the high voltage circuit to be sure that all connections made in the field are properly insulated. A dielectric test should then be made on the high voltage circuit for one minute at the maximum test voltage. Once completed and passed, the switchgear is ready for energization.

3-5. Switchgear – low voltage

The first step towards acceptance of any device is verification of nameplate data. The nameplate on all equipment shall be checked against one-lines and schematics. All equipment shall be carefully examined upon receipt to ensure that no damage has occurred during shipment. A visual inspection of the area where the switchgear is installed should be performed to confirm that there is adequate aisle space at the front and rear of the equipment for proper ventilation, service and maintenance of the equipment. The switchgear should be checked to insure it is properly anchored to its foundation. All switches, circuit breakers, and other operating mechanisms should be manually exercised to make certain they are properly aligned and operate freely. An insulation resistance test should be performed to make sure the switchgear is free from short circuits and grounds. This should be done both phase-to-ground and phase-to-phase and with the switches or circuit breakers both opened and closed. Any electrical relays, meters, or instrumentation should be checked to determine that connections are made properly and the devices function properly. Electrically exercise all electrically operated circuit breakers, and other mechanisms (but not under load), to determine that the devices operate properly. An auxiliary source of control power may be necessary to provide power to the electrical operators. Test the ground fault protection system (if furnished) in accordance with the manufacturer's instructions. Check the settings of the adjustable current and voltage trip mechanisms to confirm that they are at the proper values. Make certain that field wiring is clear of live bus and, where necessary, physically secured to withstand the effects of fault currents. Check to determine that all grounding connections are made properly. Remove all debris, scrap wire, etc., from the switchgear interior before closing the enclosure. Install covers, close doors, and make certain that no wires are pinched and that all enclosure parts are properly aligned to be tightened. Once

the above is complete perform an insulation resistance test. Before performing insulation tests precautions should be made to eliminate damage to electronic controls/sensitive equipment attached to the bus. The Insulation Resistance test is described in paragraph 2-4. Once completed and passed, the switchgear is ready for energization.

3-6. Transfer switch

The first step towards acceptance of any device is verification of nameplate data. The nameplate on all equipment shall be checked against one-lines and schematics. The transfer switch shall be checked for completeness of assembly. All equipment shall be carefully examined upon receipt to ensure that no damage has occurred during shipment such as loose parts and insulation damage. The Switch shall be checked for proper alignment and manual operation. The switch insulation resistance (phase-to-phase and phase-to-ground) shall be measured in normal and emergency positions. The wiring of the potential transformer to the control device should be checked for continuity and the control fuse should be checked to confirm size. The potential transformer should be tested as described in paragraph 3-3. The transfer switch should be checked for proper grounding. The timer settings should be checked against design parameters.

3-7. AC/DC drives

The first step towards acceptance of any device is verification of nameplate data. The nameplate on all equipment shall be checked against one-lines and schematics. All equipment shall be carefully examined upon receipt to ensure that no damage has occurred during shipment. Drives are controllers used to vary the speed of a motor. Controllers are electronic devices that should never be megger tested. They typically come equipped with internal testing capabilities. Any diagnostic tests shall be performed as indicated in the manufacturer's manual. A visual inspection of the controller, enclosure, nameplates, connections, and drawings shall be performed. After removal of the controller enclosure cover, the controller shall be checked for physical damage and any debris from installation such as wire strands shall be removed using clean, dry, low-pressure air. All terminal connections shall be checked for tightness. The drive should be energized with no connection to the load and diagnostic test should be run. Motors should be tested separately as indicated in the motor paragraph.

3-8. Motors

The first step towards acceptance of any device is verification of nameplate data. The nameplate on all equipment shall be checked against one-lines and schematics. All equipment shall be carefully examined upon receipt to ensure that no damage has occurred during shipment. A visual test of the motor shall be performed to ensure that the motor was not damaged in transit from the factory. Check that no loose items such as shaft keys, couplings, etc., are present. Check all connections for tightness and proper insulation. A mechanical test of the motor shall be performed to check that the motor is free from interference. This is accomplished by first uncoupling the motor from the driven machinery. The motor shaft is then manually rotated. The shaft should rotate freely. Once the above is complete, insulation resistance, power factor, dc hi-pot test, and polarization index tests shall be performed. The Insulation Resistance test (Megger) shall be performed for motors less than or equal to 200 hp and 480V. For motors greater than or equal to 200 hp and 2400V the Insulation Resistance and Polarization index are required. The Insulation Resistance, Polarization index, and dc Hi Pot tests are required for motors exceeding 200 hp and 2400V. On ac rotating machines, the neutral connection on the stator should be removed and a test of each winding with respect to the other two windings and ground should be obtained. After insulation resistance readings have been made, the test voltage is returned to zero and the insulation is discharged. High pot each phase separately with the other two phases and the winding temp detectors grounded. Capacitors and surge arrestors should be disconnected during this test. Once

completed and passed, the motor is ready for energized checks. A phase check should first be performed by momentarily energizing or "bumping" the motor to confirm the proper direction of rotation. This will confirm that the correct phase connections have been made. Once the correct phasing is confirmed, the motor is ready for energization.

3-9. Generators

The first step towards acceptance of any device is verification of nameplate data. The nameplate on all equipment shall be checked against one-lines and schematics. All equipment shall be carefully examined upon receipt to ensure that no damage has occurred during shipment. A visual inspection shall be made to check for any loose parts, connections, or foreign materials, nameplates/parts drawings. The clearance in the generator and exciter air gap shall be checked. Be sure the generator set turns over freely. Rotate the generator rotor by hand at least two revolutions to be sure there is no interference and it turns freely. Do not apply any mechanical force to generator fan when rotating generator rotor. The insulation on all wires shall be inspected. Insulation that is loose or frayed is unacceptable and should be repaired. All wiring should be checked against the equipment drawings and all connections should be secure. Loose or dirty connections are unacceptable and should be repaired. All leads should be supported or tied to keep them from being damaged by rotating parts or sharp corners. After installation, the generator shall be checked for proper mounting and grounding. Verify that the generator is connected for the required voltage. The equipment should be inspected for any foreign objects such as remaining packing materials, loose debris including, building materials, tools, hardware, rags, paper, leaves, etc., that could be drawn into the generator and removed. All bolts and fasteners should be checked for tightness. All covers and guards should be in place and secure. Always make a thorough visual inspection to check for any obvious problems before attempting to test and run the generator. If the generator is part of a motor generator (MG), uncouple the motor. Manually rotate the motor shaft to check that the motor is free from any interference and reconnect. Check that no loose items such as shaft keys, couplings, etc., are present. Check all connections for tightness and proper insulation. Insulation resistance, polarization index and dc overpotential tests shall be performed before the generator is energized.

a. Winding resistance test. The main stator winding resistance is very low. A meter capable of readings in the milli-ohm range would be required. A standard VOM can be used to check for continuity, shorts or grounds. The winding resistance is measured with a dc bridge and compared with the calculated design values. This value, corrected to operating temperature is also used to calculated stator I^2R loss for efficiency determination.

b. DC overpotential test. Perform a dc overpotential test to assess the dielectric strength of the insulation of a generator. The ac voltage used in this test is the factory test value. For stator windings this value is typically calculated to be twice the rated voltage plus 1,000. High pot each phase separately with the other two phases and the winding temperature detectors grounded. Capacitors and surge arrestors should be disconnected during this test. Measure the voltages. Now the generator can be run with no load and tested by performing the constant excitation test and the current measurements.

c. No-load test. This test will determine whether a problem exists in the generator or regulator system. The theory behind this test is as follows. The output voltage of a generator is dependent on its speed, design, load, and exciter input current. If the speed and exciter input are known, the output voltage at no load can be measured and compared to the design value. With the generator shut down, connect voltmeter to the generator output. Disconnect the leads at the regulator and connect a 12-volt battery capable of supplying one amp to the leads. Check to make sure that the battery is connected to the leads with the correct polarity. With no load on the generator, (main breakers open) run the generator at rated speed. Measure generator output voltage. Shut the generator down. Compare the voltage reading with

design value, if they match the regulator is functioning properly (implement this procedure in accordance with manufacturers' recommendations).

d. Load test. This test will determine whether a problem with the sequence of the loading of the generator exists. With no load on the generator, (main breaker open) run the generator at rated speed. Gradually add load as sequenced. Standard procedures for commercial, routine and acceptance tests for determination of speed- governing performance characteristics of internal combustion engine-generator units can be found in ASME Power Test Codes (PTC) 26.

e. Operation of multiple generators in parallel. When operating multiple generators in parallel the operators must be aware of their operating sequence. For a system with three generators in parallel the operating sequence could be generator one then two then three or, two then one or three or, either one or two or three. A way to identify the scheme of a system is to functionally test the system by removing one generator from the system and verifying that the system operates. For example, when operating three generators in parallel, where two are normally operating and one is considered the backup generator the circuitry could be such that the first generator always acts as the starting generator and when it is up to speed, the second generator will synchronize to the first and following this, the third generator will synchronize to the second (one then two then three). In this arrangement if the first generator does not come up to speed (or is taken out of service), the second generator will not go on-line and subsequently neither will the third or, if the first generator does come up to speed but the second generator is down for service, the third will not go on-line since it is dependent on the third. A scheme where the first generator is the staring generator and either generator two or three synchronize to it is preferable over the first scheme since the probability of a second generator coming on-line is greater however you still stand the risk of the staring generator failing and thus halting the system. A preferred scheme is one where any of the three generators will perform as a starting generator and either of the remaining generators will synchronize to the generator on-line (one or two or three).

f. Speed control checks. When the alternating current generator sets are in parallel, load division between units is entirely controlled by the speed setting of the engine governors. Increasing the speed setting of one engine will cause it to absorb more load, and other generator sets in the system will be relieved of some load. Conversely, decreasing the speed setting of one engine will cause it to decrease load. Other generator sets will absorb that load. All load can be remove from a generator by slowly decreasing the speed setting. If the speed setting is moved lower than the no load point, that generator set will absorb power from other units which will continue to drive it at synchronous speed. It is impossible to have stable parallel operation if more than one unit in the system is set for zero speed droop (isochronous) operation unless the governors are the electronic load sharing type. When two or more units are operation in parallel, the regulator must control the excitation of the alternators so they share the reactive load. Two ways are: reactive droop compensation and reactive differential (cross current) compensation. Reactive droop compensation does not require wiring interconnection between regulators. During parallel droop compensation operation, the bus voltage droops (decreases) as the reactive lagging power factor load is increased. Reactive differential (cross current) compensation requires the addition of interconnecting leads between the current transformer secondaries and allows operation in parallel without voltage droop with reactive load. Cross current compensation can only be used when all the paralleling current transformers on all the generators delivering power to the bus are in the CT secondary interconnection loop. Because of this requirement, cross current compensation operation cannot be used when a generating system is operating in parallel with the utility power grid. Utility voltage can vary enough to cause high circulating current in a paralleled generator. KVAR controllers must be used to adjust generator voltage to match utility and minimize circulating current.

3-10. Batteries

Although battery type varies (e.g., NiCd, Lead Acid), the acceptance criterion remains generally the same. The first step towards acceptance of any device is verification of nameplate data. The nameplate on all equipment shall be checked against one-lines and schematics. All equipment shall be carefully examined upon receipt to ensure that no damage has occurred during shipment. Any apparent physical damage shall be recorded. If the battery is delivered filled, it shall be inspected to verify that no electrolyte has leaked during transit. If the battery cells are not delivered filled, it is recommended that they be filled according to manufacturer's recommendations before installation on racks. The individual cell condition check shall include visual inspection of cell integrity investigating evidence of corrosion at terminals, connections, racks, or cabinet. The general appearance and cleanliness of the battery, the battery rack or cabinet and battery area including accessibility shall be observed. The cells shall be checked for cracks in cell or leakage of electrolyte as well as the integrity of the cover. Electrolyte should be added to any cell in which the electrolyte level is below the top of the plates. Before installation, the voltage of each cell shall be measured. The voltage measured should be equal to or less than 0.05 V below the manufacturers open circuit voltage. If it is not, the manufacturer shall be contacted to determine the next course of action. The cell polarity for positive to negative connections shall be checked. The battery shall be assembled as shown on drawings. Each battery cell is then checked to ensure the electrolyte level is at the maximum level. The interconnection of the battery cells shall be checked for polarity. The connector bolts shall be checked to ensure that they have been tightened to the manufacturers recommended torque values. The cell internal ohmic values and the intercell connection resistances shall be then measured. This is accomplished by applying a load across the battery and measuring the step change in voltage and current for each cell taken between the positive and negative terminal posts of adjacent cells as well as the battery as a whole. The ohmic value is the change in voltage divided by the change in current. The resistance values for each cell shall then be averaged and any interconnection that varies more than 10% or 5 $\mu\Omega$ over the average shall be remade and then rechecked for its resistance value. These values shall become baseline values for comparison in future tests. The presence of flame arresters, adequacy of battery support racks, mounting, anchorage, grounding, and clearances, ventilation of battery room enclosure, and existence of suitable eyewash equipment shall be verified. After completion of the above inspections the battery is ready to be connected to the charger. After charging, the following should be measured: each cell voltage and total battery voltage with charger in float mode of operation; ripple current; specific gravity; electrolyte temperature; electrolyte fill level; overall float voltage measured at the battery terminals; charger output current and voltage; ambient temperature; condition of ventilation and monitoring equipment; and temperature of the negative terminal of each cell of the battery. When the battery is charged, use a voltmeter to check the polarity of the series connections. The total voltage shall be measured both across the battery and between adjacent cells and then shall be compared to the specified voltage. The total voltage should approximately be the resultant of the quantity of cells multiplied by the typical cell voltage. A variation is an indication that the battery may be improperly assembled.

a. Discharge test. The values for discharge time and end point voltage should be selected from the battery manufacturer's published ratings and the values used for the acceptance test should be approximately the same as that of the intended application. The discharge rate should be at a constant current or constant power load equal to the selected manufacturer's rating of the battery. The charging method used as the basis for the published data is an important factor. For a stationary float application, data based on prolonged constant potential charging should be used. If constant current charging has been used to establish the published data, appropriate float charging correction factors should be obtained from the manufacturer. Note that the test discharge current is equal to the rated discharge current divided by the temperature correction factor for the initial electrolyte temperature. Set up a load and the necessary instrumentation to maintain the test discharge rate determined in above. Disconnect the charging source, connect the load to the battery, start the timing, and continue to maintain the selected discharge rate. If the charging source cannot be disconnected, the current being drawn by the load has to

be increased to compensate for the current being supplied by the charging source to the battery. Read and record the individual cell voltages and the battery terminal voltage. The readings should be taken while the load is applied at the beginning and at the completion of the test and at specified intervals. There should be a minimum of three sets of readings. Individual cell voltage readings should be taken between respective posts of like polarity of adjacent cells so as to include the voltage drop of the intercell connectors. Maintain the discharge rate and record the elapsed time at the point when the battery terminal voltage decreases to a value equal to the minimum average voltage per cell as specified by the design of the installation times the number of cells.

b. Capacity check. The capacity of the battery is checked using the following equation:

$$\text{Percent Capacity at the test rate at 25°C (77°F)} = (t_a / t_s) \times 100$$

Where:

t_a is the actual time of the test to specified terminal voltage as corrected for temperatures
t_s is the rated time to specified terminal voltage

3-11. Battery chargers

The first step towards acceptance of any device is verification of nameplate data. The nameplate on all equipment shall be checked against one-lines and schematics. All equipment shall be carefully examined upon receipt to ensure that no damage has occurred during shipment. A visual inspection should be performed to verify the completeness of the equipment, correctness of installations, supports, grounding, and wiring. The rating plate shall be checked to ensure that both the ac supply to the charger and the battery to be connected corresponds to the charger's parameters. Confirm that all shipping and other debris in and around the charger cabinet have been removed. Check settings of the charger and calibrate per manufacturer's manual to match the battery (float and equalizing levels). If the battery charger has been factory set, check the charger float and equalizing voltage levels against drawings and specifications. If not, set the charger float and equalizing voltage levels to those listed on drawings and specifications. Before connecting to the battery, measure the output voltage provided by the charger and record. Verify that all charger functions and alarms operate correctly. Verification that the battery is connected to the battery charger properly is extremely important. The negative wire from the negative terminal of the battery must be connected to the negative terminal of the charger. Similarly, the positive wire from the negative terminal of the battery must be connected to the positive terminal of the charger. A battery charger is an electronic device that converts ac power to dc power. The charger supplies this dc power to the battery. As with all electronic devices, this device should not be megger tested.

3-12. UPS systems

The first step towards acceptance of any device is verification of nameplate data. The nameplate on all equipment shall be checked against one-lines and schematics. All equipment shall be carefully examined upon receipt to ensure that no damage has occurred during shipment. The Static UPS System consists of the battery charger, inverter, battery, transfer switch, circuit breakers, and cables. A picture of a typical UPS systems is seen in figure 3-1. Of the UPS system, the component testing for the battery charger, battery, transfer switch, circuit breakers, and cables are described individually in this manual. The inverter is similar in construction to the charger. It converts dc power to ac power using solid state electronics. Therefore, this device should not be megger tested. The completeness of the assembly shall be confirmed. A visual inspection should be performed to verify the correctness of installations, supports, grounding, and wiring. Verify that the air inlets are not obstructed. The interconnections shall be checked against the wiring schematic to ensure the proper phasing and voltage connections. For example, both the battery charger connections to the battery and the battery to the inverter should be checked to insure that

they have the correct polarity. Measure the input voltage provided by the battery and record. Measure the output voltage and current from the inverter and record. Verify that these values correspond to the design values.

3-13. Cables

For commissioning of cables, the receipt inspection and testing is performed while the cable is still on the reel. The exposed sections of the cables are visually inspected for signs of physical damage, the end caps are checked for tightness. The cable types and configuration are checked for correctness against drawings and purchasing documents. Continuity tests are performed on each conductor and the shield. For power cables, insulation resistance tests are performed between each conductor and each conductor and the shield. The cable installation shall be checked against one-lines and schematics. After installation, the cables are inspected for damage, proper trained bending radius, adequate spacing for ampacity, proper installation of fireproofing, proper size, termination, and identification. Next, conductors are checked for continuity. The following tests shall be performed before the cables are energized. They are the insulation resistance (Megger) test and the dc hi pot test. For medium and high voltage shielded cables the acceptance is dependent on the dc hi pot test. A satisfactory test is the exponential decrease of current with time with a fixed dc voltage applied. Non-shielded cables are not

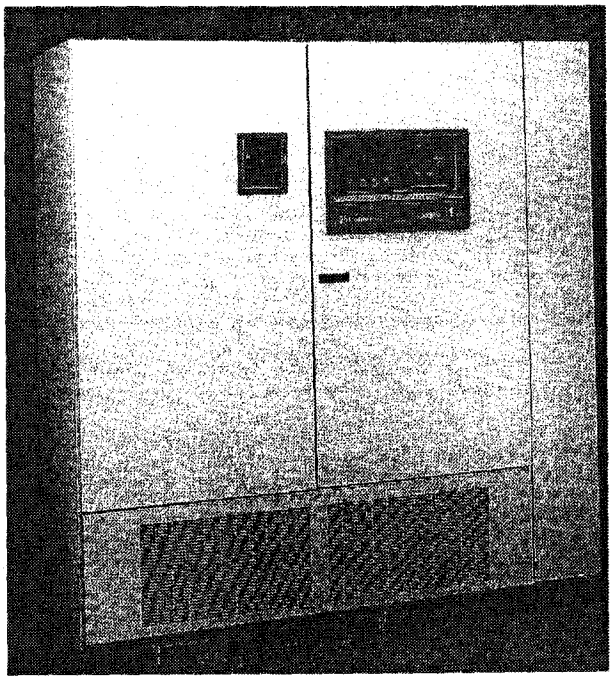

Figure 3-1. Static UPS system 150 to 750 kVA (courtesy of Liebert)

subject to the hi-pot test because only the sections of cable in contact with ground (such as cable tray rungs) are actually tested and therefore the test is not meaningful. Test duration should not exceed 5 minutes for non-shielded cable or 15 minutes for shielded cable. When performing a dc High-potential test on cables, all precautions and limits as specified in the applicable NEMA/ICEA (Insulated Cable Engineers Association) standard for the specific cable should be followed. Tests should be performed in accordance with ANSI/IEEE Standard 400. Test voltages shall not exceed 80 percent of cable manufacturer's factory test value or the maximum test voltage in table 3.1 below. The test procedure should be as follows and the results for each cable test shall be recorded. Test each section of cable individually with all other conductors grounded. All shields must also be grounded. Terminations shall be adequately corona-suppressed by guard ring, field reduction sphere, or other suitable methods as necessary. Precaution should be taken to insure that the maximum test voltage does not exceed the limits for terminations specified in IEEE Standard 48 or manufacturers specifications.

Reduce the conductor test potential to zero and measure residual voltage at discrete intervals. Upon the completion of the test, apply grounds for a time period adequate to drain all insulation-stored charge. When new cables are spliced to existing cables, the dc high-potential test shall be performed on the new cable prior to splicing. After test results are approved for the new cable and the splice is completed, an insulation resistance test and a shielding continuity test should be performed on the length of the new and existing cable including the splice. After a satisfactory insulation resistance test, a dc high potential test shall be performed on the cable utilizing a test voltage acceptable to owner and not exceeding 60 percent of factory test value.

Table 3-1. Medium-voltage cables maximum field acceptance test voltages (kV, dc)

Insulation Type	Rated Cable Voltage	Insulation Level	Test Voltage kV (dc)
Elastomeric: Butyl and Oil Base	5 kV	100 %	25
	5 kV	133 %	25
	15 kV	100 %	55
	15 kV	133 %	65
	25 kV	100 %	80
Elastomeric: EPR	5 kV	100 %	25
	5 kV	133 %	25
	8 kV	100 %	35
	8 kV	133 %	45
	15 kV	100 %	55
	15 kV	133 %	65
	25 kV	100 %	80
	25 kV	133 %	100
	28 kV	100 %	85
	35 kV	100 %	100
Polyethylene	5 kV	100 %	25
	5 kV	133 %	25
	8 kV	100 %	35
	8 kV	133 %	45
	15 kV	100 %	55
	15 kV	133 %	65
	25 kV	100 %	80
	25 kV	133 %	100
	35 kV	100 %	100

NEMA Table 10.6

Derived from ANSI/IEEE Standard 141-1993 Table 12-9 and by factoring the applicable ICEA/NEMA Standards.

NOTE: AEIC CS5 and CS6, and ANSI/IEEE Standard 400 do not differentiate cables based upon insulation thickness and, consequently, list differing test voltages.

Insure that the maximum test voltage does not exceed the voltage limits for potheads and terminators specified in IEEE Std. 48 (IEEE Standard Test Procedures and Requirements for High-Voltage AC Cable Terminations) or for molded rubber terminations specified in IEEE Std. 386 (IEEE Standard for Separable Insulated Connector Systems for Power Distribution systems Above 600 V), or manufacturer's published data.

Reprinted from NETA's Acceptance Testing Specifications, copyright 1999. Courtesy of the International Electrical Testing Association. All rights reserved.

CHAPTER 4

MAIN POWER SYSTEM

4-1. Description of main power system

The following is a sample main power system with associated one-line and wiring diagrams for use as a guide for implementing the test procedures described in the preceding chapters of this manual. The major equipment in this main power system includes 34.5 kV circuit switchers, 15,000 kVA oil filled transformers, and 13.8 kV metal clad switchgear including relays and controls. The equipment, accessories, interconnections, ratings, and cabling are shown in figures 4-1 through 4-7. Figure 4-1 diagrams the main power system single line on page 4-7. Figure 4-2 diagrams the main power system control cable block on page 4-8. Figure 4-3 diagrams the main power system circuit switcher on page 4-9. Figure 4-4 diagrams the main power system switchgear load breaker on page 4-10. Figure 4-5 diagrams the main power system switchgear incoming breaker on page 4-11. Figure 4-6 diagrams the main power system circuit switcher wiring diagram on page 4-12. Figure 4-7 diagrams the main power system incoming breaker wiring on page 4-13.

a. Switches. The 34.5 kV Circuit Switchers are outdoor vertical break, shunt trip with full momentary current capability and limited fault current interrupting for applications feeding power transformers. Each switch contains a high speed high torque power operator, interrupting units, disconnects, and post insulators. The operator receives a trip or open signal from relays or a control switch, trips the interrupter, and then opens the disconnect. If too much shunt current is available the relaying scheme will block the switch from opening until the current decreases to an acceptable level. Each circuit switcher has a 125 Vdc control circuit for control, relaying, and operator power. The circuit switcher is intended to operate on transformer overload, transformer secondary faults, transformer through faults not cleared by down stream switchgear breakers, and low value high resistance transformer faults. The 12/15 MVA power transformers are outdoor oil filled with radiators and fans for cooling, temperature and fault indicating relays, bushing mounted current transformers, no load secondary tap changer, and a control and alarm panel. The control and alarm panel requires a 120/208V, three phase power source for the controls, cabinet heater, and alarms. The 13.8 kV switchgear is indoor, metal clad with individual spring operated vacuum circuit breakers and controls.

b. Breakers. The switchgear line-up contains two incoming, one tie, and eight load breakers. Each breaker has a relay/control compartment containing a control switch, indicating lights, relays, control wiring, and terminal blocks. The breakers have electrical and mechanical interlocks to prevent inadvertent operation, open/close springs, spring charging motors, position switches, and close and test positions. An auxiliary compartment in the switchgear is used to house the circuit switchers' control, indication, relays, and remote alarms; and the transformer remote alarms. For control, each circuit switcher and switchgear breaker has a control switch, indicating lights and relays. Each circuit switcher trip circuit contains overcurrent, differential current, transformer overload lockout, and transformer sudden pressure relays. The switchgear and load breakers have overcurrent relays. The tie breaker has no relaying, and is intended to be closed to the switchgear bus together when a transformer is out of service. It is interlocked to open or block closure if both of the incoming breakers are closed. There are potential transformers (PTs) on both sides of the switchgear and load circuit breakers. They are connected to undervoltage relays and sync check relays. The switchgear requires a 125 Vdc control and relay feed and 120 V single phase feed for space heaters.

4-2. Operation of main power system

The operating modes for the main power system are as follows. These are some of the steps that would be included in a systems operation document (SOD).

a. Normal condition. Both circuit switchers closed, both transformers energized, both switchgear breakers closed, tie breaker open, and load breakers closed.

b. Transformer problem. Associated circuit switcher and switchgear breaker open automatically, other circuit breaker and switchgear breaker remain closed, and tie breaker closes automatically into dead bus.

c. Transformer maintenance. Transformer to be maintained selected, tie breaker closed into live bus and incoming breaker opened for transformer to be maintained, and circuit switcher for transformer to be maintained opened

d. Return to normal. Circuit switcher for deenergized transformer closed and switchgear breaker closed to live bus and tie breaker opened.

NOTE: Automatic closing of the tie breaker during protective relay functions is a dead bus transfer. Manually closing of tie breaker or closing of incoming breaker with tie breaker closed will parallel both transformers and sync check relays will not permit breaker closing if the busses are not synchronized.

4-3. Commissioning test plan for main power system

A system verification and functional performance test should be performed on the main power system. These tests will include installation inspections, individual component testing, verification and continuity testing on wiring, control and interlock function checks, equipment energization, system operating measurements, and functional tests.

4-4. Installation inspections and component testing of main power system

As indicated in more detail in chapter 3, the installation of the main components (i.e. circuit switchers, transformers, and 13.8 kV switchgear) will be inspected for the following. These checks can be considered part of the pre-checks or the functional performance tests (FPTs).

a. Circuit switcher. Verification of nameplate, sizing, and settings against drawings, completeness of assembly, loose parts and insulation damage, alignment and operation including limit switches and interlocks, insulation resistance test on each pole, interrupter time travel analysis and proper grounding. Figure 4-8 on page 4-14 shows a sample of a completed DA Form 7463-R for a circuit switcher.

b. Oil-filled transformer. Verification of nameplate, size and settings against drawings, completeness of assembly, loose parts and insulator damage, seals and oil levels, auxiliary device operation and settings for radiators, fans, cooling, alarms, gauges, tap changer, etc., proper grounding, insulating liquid dielectric, acid neutralization, specific gravity, quality, color, etc., insulation resistance phase-to-phase, phase-to-ground, current transformers, turns ratio – high-to-low windings at all taps, current transformers at all taps and impedance and polarity on current transformers. Figure 4-9 shows a sample of a completed DA Form 7464-R for a transformer.

c. Metal clad switchgear. Verification of nameplate, sizing, and settings against drawings, completeness of assembly, loose parts and insulation damage, breaker alignment and operation (leave open) including limit switches and interlocks, bus insulation resistance (if not previously energized), relay calibration and settings including current transformer primary injection, insulator damage, proper grounding and current/potential

transformer insulation resistance, turns ratio, and polarity. Figure 4-10 on page 4-16 shows a sample of a completed DA Form 7565-R for the switchgear.

d. Cabling. Proper use, voltage, labeling, and connections using drawings, tightness and neatness of terminations, and power cable insulation resistance (phase-to-phase and phase-to-ground). Figure 4-11 on page 4-17 shows a sample of a completed DA Form 7466-R for power cables.

e. Visual and electrical wiring inspections. The termination of each cable, shown on the cable block and wiring diagrams, should be checked to ensure each conductor matches the wiring and schematic diagrams. This is performed by yellowing each connection from the schematic to the wiring diagram; visually inspecting each connection for cable number, wire number/color, and terminal; and checking point-to-point continuity or "ringing out" each wire from end-to-end including grounds. For example, Cable CIS from Circuit Switcher I to the Switchgear Control Panel should be checked to verify schematic diagrams (figure 4-6).

Equipment	**Terminal No.**
Circuit Switcher	2
Switchgear Control Panel	1

As this is done, the wire on each drawing should be colored or highlighted to show its termination has been checked. This process should be completed for all field wiring as a minimum and internal wiring if not previously performed at the factory.

4-5. Energizing and test of the main power system

The following are the steps to energize and test the main power system. These are some of the steps that would be included in a functional performance test (FPT).

a. Initial energization. The control circuits for each component shall be sequentially energized from the circuit switcher down to the switchgear load breakers with the utility fuses removed. The control and interlock functions for each circuit shall be verified by opening or closing the control switches, protective and lockout relay contacts, temperature switches, etc. with both circuit switchers closed, all switchgear circuit breakers closed, and the switchgear tie breakers open. For example, on a circuit switcher the functions as shown on table 4-1 should be performed and checked. Verify operation of transformer circuits as in (1) and (2) below.

Table 4-1. Circuit switcher functional checklist

Function	**Action to Check**
1) Energize Close/Trip Circuit	Green Light On Red Light Off Switcher Open Verify 86C/86I Normal
2) Close Control Switch	Red Light On Green Light Off Switcher Closed
3) Trip Control Switch	Green Light On Red Light Off Switcher Closed
4) Reclose Circuit Switcher	Red Light On Green Light Off Switcher Closed

Table 4-1. Circuit switcher functional checklist (continued)

5) Trip 86C	Green Light On Red Light Off Switcher Open 86C Tripped Switcher Won't Reclose using Control Switch
6) Reset 86C	Green Light On Red Light Off Switcher Open
7) Close Control Switch	Red Light On Green Light Off Switcher Closed
8) Trip 86I	Green Light On Red Light Off Switcher Open 86C Tripped Switcher Won't Reclose using Control Switch
9) Reset 86I	Green Light On Red Light Off Switcher Open
10) Close Circuit Switcher	Red Light On Green Light Off Switcher Closed

(1) Transformer trip. Verify circuit switchers and incoming breakers closed and tie breaker open. Simulate transformer trip by operating Transformer 87 relay. Verify 86's trip; and then associated circuit switcher and incoming breaker opens, and tie breaker closes transfer. Verify tie breaker transfer is "dead" bus by measuring continuity from high side of incoming breaker to unaffected bus. Reclose 86, circuit switcher, and incoming breaker. Open tie breaker. Repeat above process for other transformer.

(2) Transformer maintenance. Verify circuit switchers and incoming breakers closed and tie breaker open. Choose transformer to be removed from service. Close tie breaker. Open circuit switcher and incoming breaker for transformer to be maintained. Verify tie breaker transfer is "live" bus by measuring. Reclose circuit switcher and incoming breaker. Open tie breaker. Verify tie breaker transfer is "live" bus. Repeat above process for other transformer.

b. Energization of main power system. Individual components of the system shall be sequentially energized from the circuit switcher through the switchgear load breaker with the utility fuses installed as follows:

(1) Circuit Switcher 1 & 2. Verify main switchgear breaker open. Verify incoming voltage and phasing. Close circuit switcher. Measure voltage on secondary of transformer. Compare voltage and phasing on both transformer secondaries.

(2) 13.8 kV switchgear. Verify tie breaker and load breakers open. Close incoming breakers. Measure voltage on switchgear bus. Compare voltage and phasing across tie breaker, close and open tie breaker. Close load breakers one at a time. Measure voltage and current after closing each load breaker.

(3) Transformer trip test. Verify system energized with both circuit switchers closed, switchgear incoming and load breakers closed, and tie breaker open. Notify plant of impending transfer. Simulate transformer trip by operating 50/51 relay. Verify 86C trips and then associated circuit switcher and incoming breaker open and tie breaker closes. Measure voltage and current on switchgear buses and verify "dead" bus transfer of tie breaker. Reclose 86C circuit switcher, and incoming breaker. Open tie breaker. Verify tie breaker transfer is "live" bus by measuring bus voltages and current. Repeat above process for other transformer.

(4) Transformer maintenance test. Verify system energized with both circuit switchers closed, switchgear incoming and load breakers closed, and tie breaker opened. Notify plant of impending transfer. Choose transformer to be removed from service. Close tie breaker. Open circuit switcher and incoming breaker for transformer to be maintained. Verify tie breaker transfer is "live" bus by measuring voltage and current on switchgear buses. Reclose circuit switcher and incoming breaker. Open tie breaker. Verify tie breaker transfer is "live" bus. Repeat above process for other transformer.

(5) Checklists. The acceptance testing is complete when all test are performed satisfactorily and checklists for system components are complete. Figure 4-12 shows a sample of a completed DA Form 7467-R.

4-6. Possible failures and corrective actions of the main power system

Table 4-2 lists general problems that may arise during the testing of the equipment and systems along with possible troubleshooting techniques. For all problems, consult the equipment and component manuals for troubleshooting directions, check fuses/lights/breakers/etc. for continuity, check equipment calibration and settings, and look for faulty equipment or connections.

Table 4-2. Possible failures and corrective actions of the main power system

Circuit Switcher	Areas to Check
Devices will not close/trip	Mechanical alignment/Limit Switches Interlocks Relay and protective device settings and operation Check for mis-wired circuits Control circuit
Devices trip inadvertently	Relay and protective device settings and operation Check for mis-wired circuits Control circuit System overload or short Ground on cable system

Table 4-2. Possible failures and corrective actions of the main power system (continued)

Breaker	Areas to Check
Devices will not close/trip	Mechanical alignment/Limit Switches Interlocks Relay and protective device settings and operation Check for mis-wired circuits Control circuit
Devices trip inadvertently	Relay and protective device settings and operation Check for mis-wired circuits Control circuit System overload or short Ground on cable system

Transformer	Areas to Check
Transformer trips	System overload Cooling system Transformer internal short or bushing failure Transformer relay settings and operation Check for mis-wired circuits Transformer oil
Transformer overheats	System overload Cooling system

Main Power System	Areas to Check
Devices will not close	Mechanical alignment/Limit Switches Interlocks Check for mis-wired circuits Control circuit
Inadvertent trips	System overload Cable shorts or grounds Equipment shorts or grounds Transformer cooling Check for mis-wired circuits Relay and protective device settings

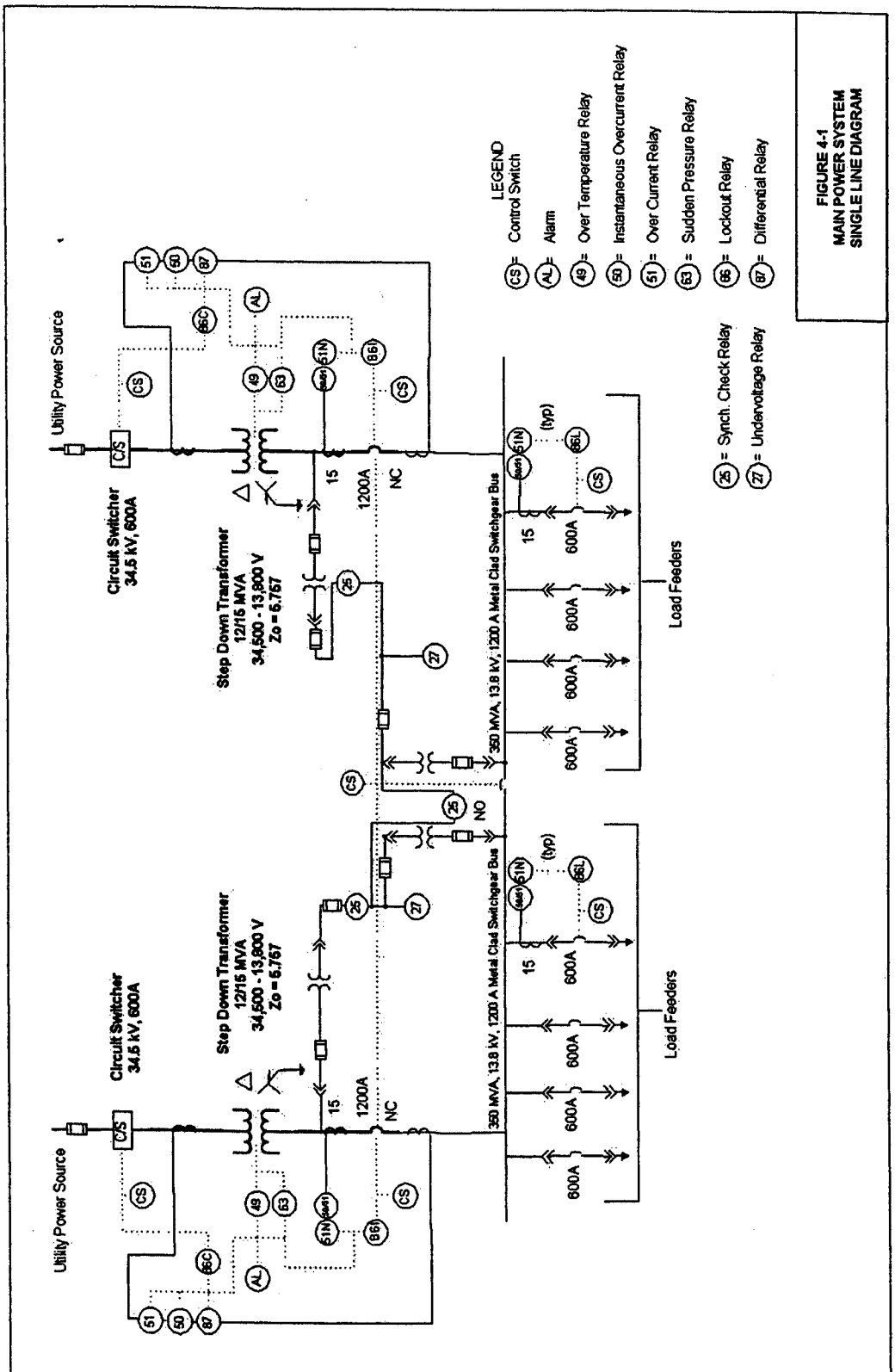

Figure 4-1. Main power system single line diagram

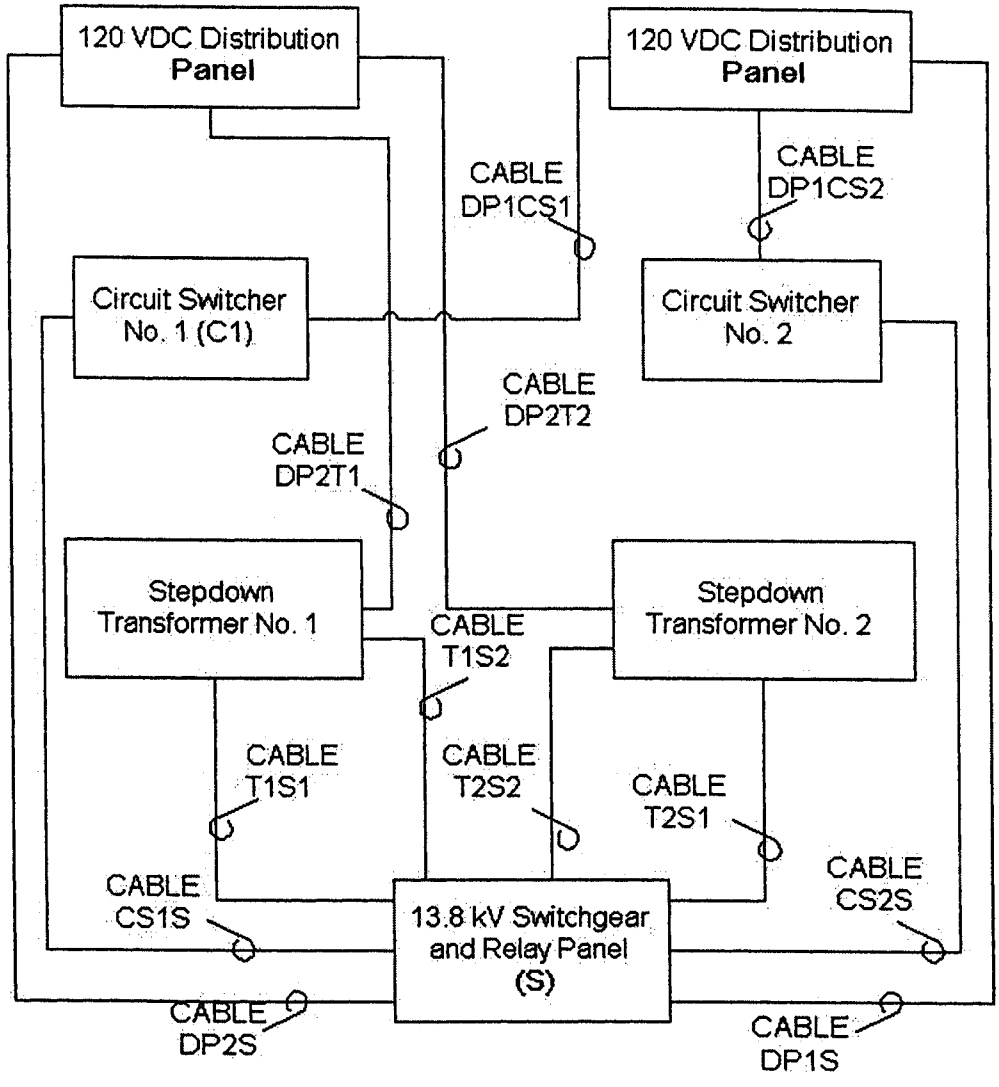

FIGURE 4-2
MAIN POWER SYSTEM
CONTROL CABLE
BLOCK DIAGRAM

Figure 4-2. Main power system control cable block diagram

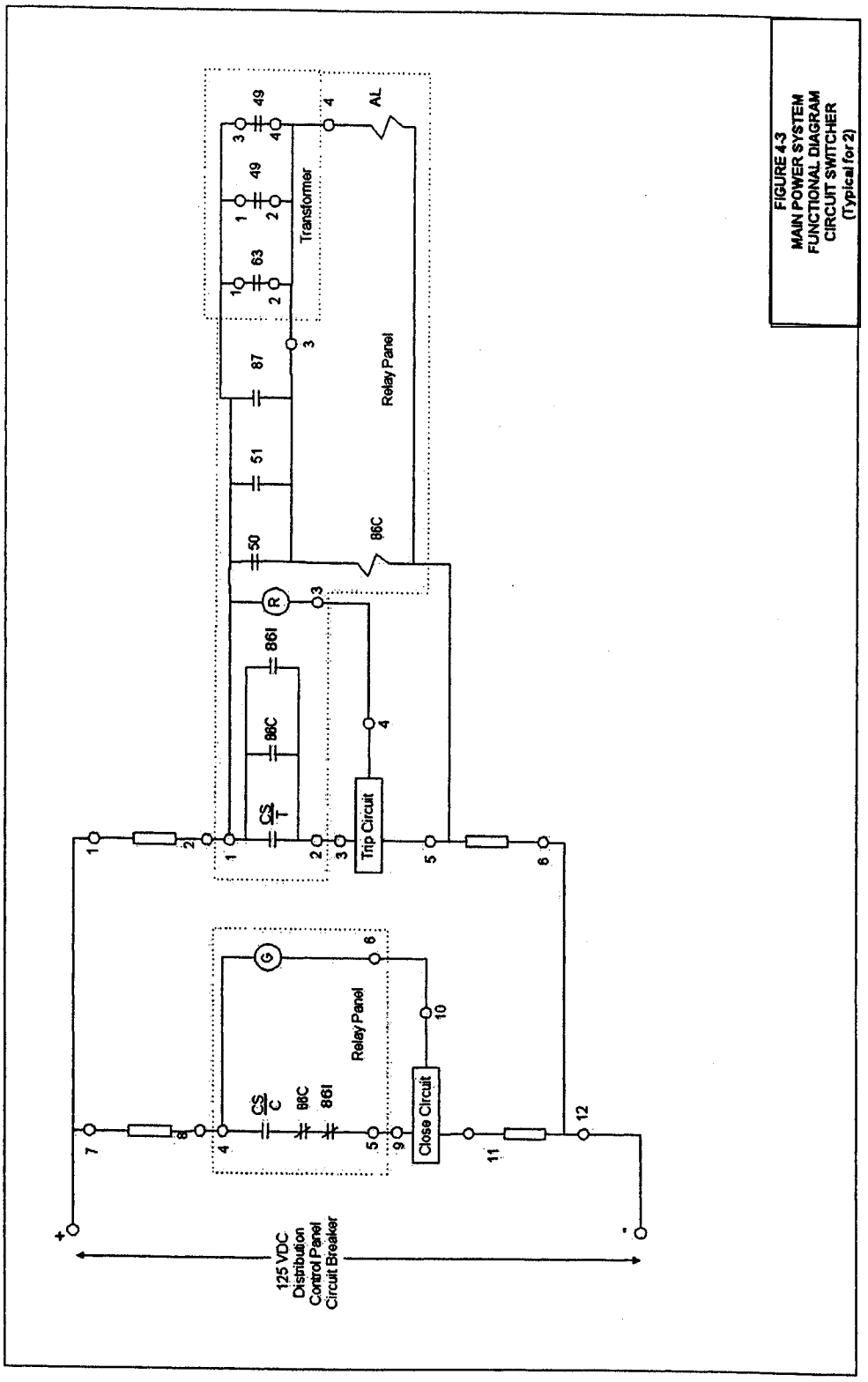

Figure 4-3. Main power system functional diagram circuit switcher (typical for 2)

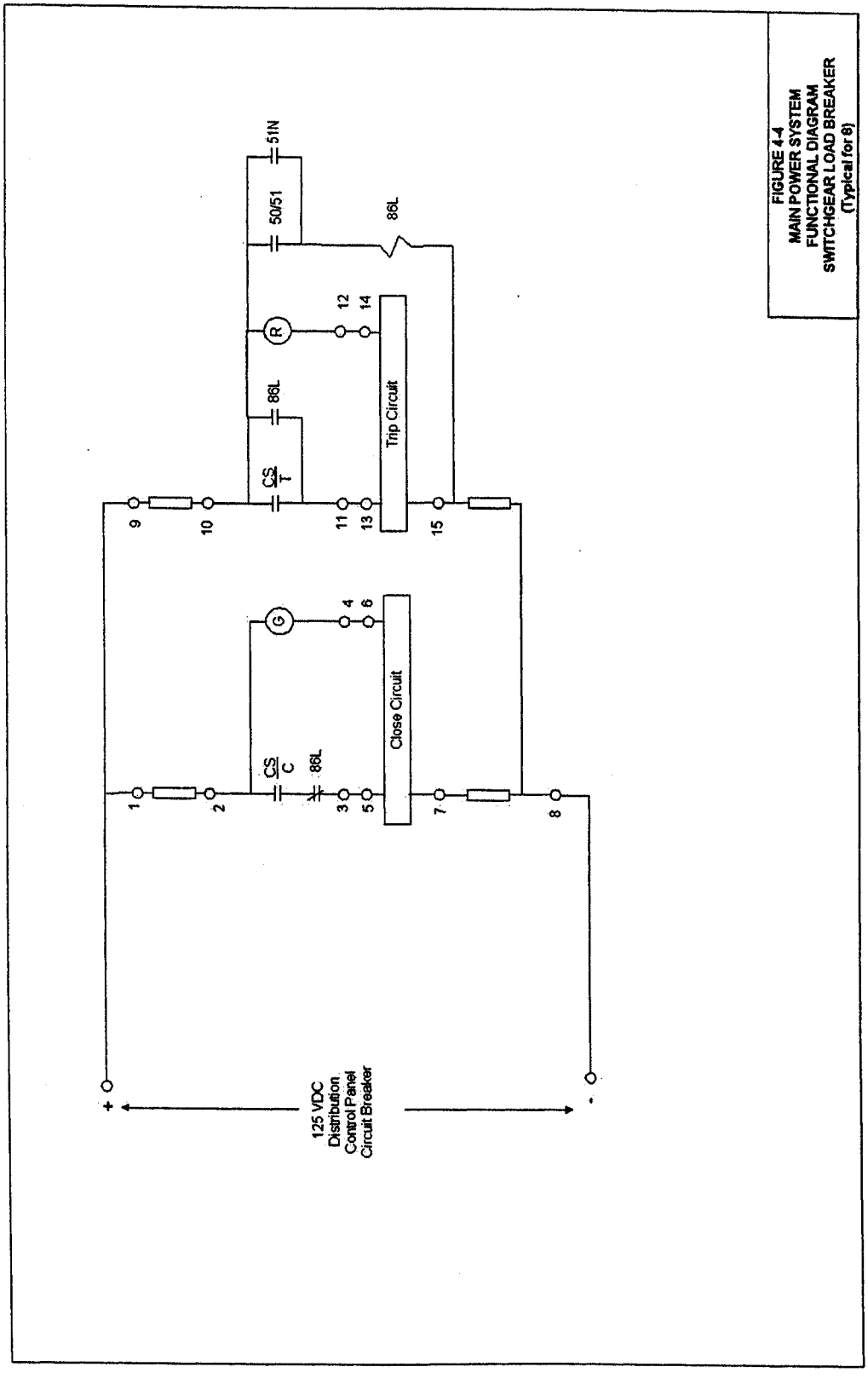

Figure 4-4. Main power system functional diagram switchgear load breaker (typical for 8)

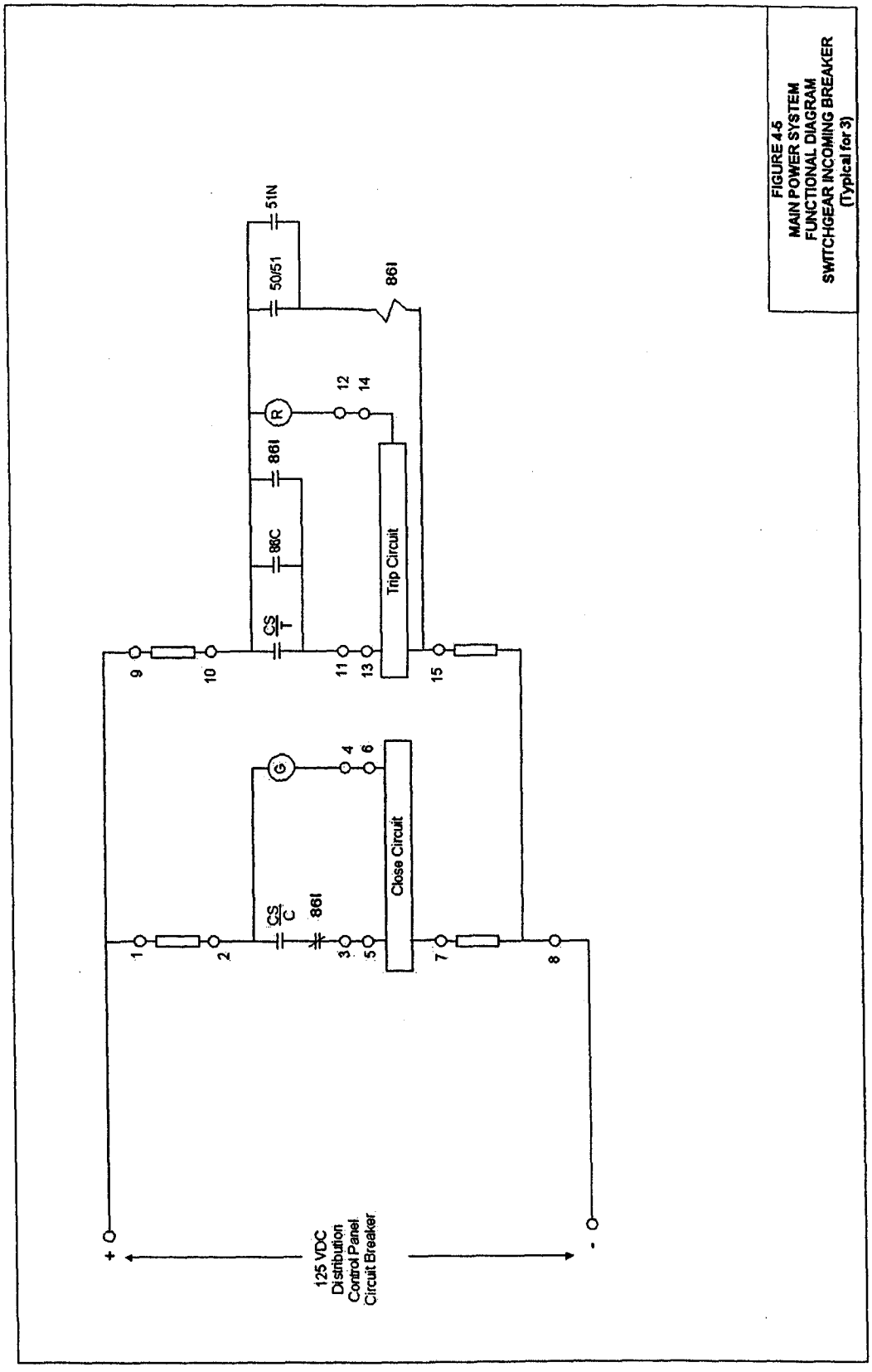

Figure 4-5. Main power system functional diagram switchgear incoming breaker (typical for 3)

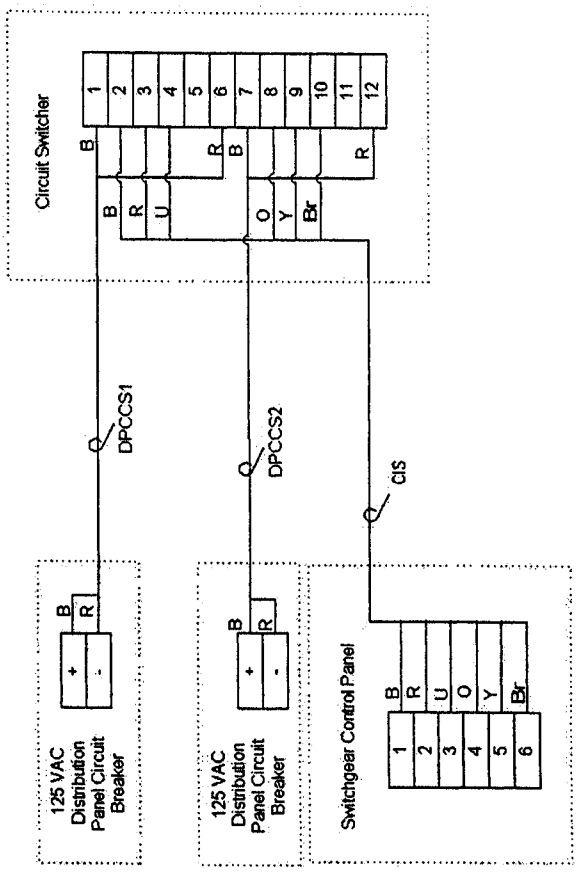

FIGURE 4-6
MAIN POWER SYSTEM
CIRCUIT SWITCHER WIRING DIAGRAM
(Typical for 2)

Figure 4-6. Main power system circuit switcher wiring diagram (typical for 2)

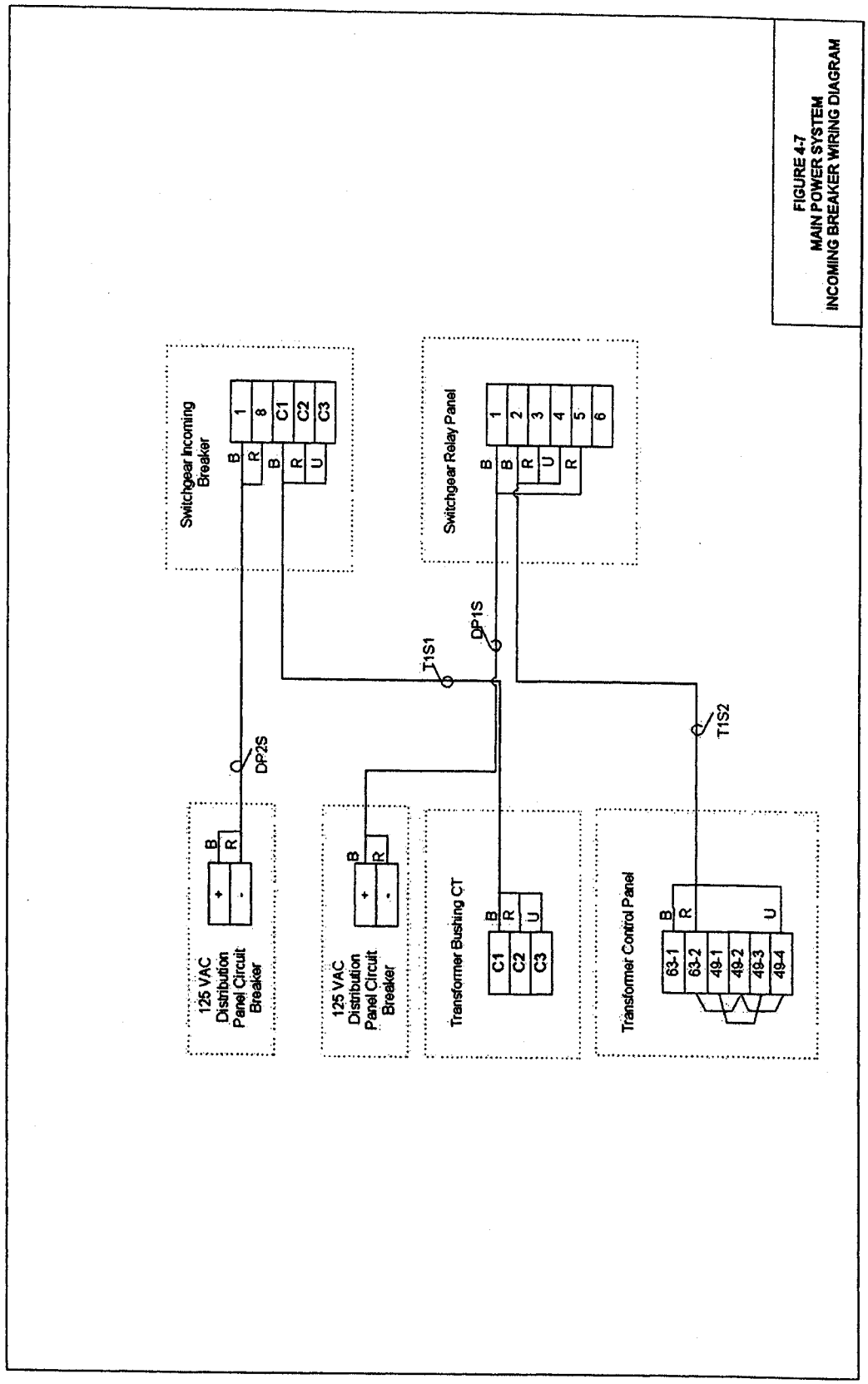

Figure 4-7. Main power system incoming breaker wiring diagram

CIRCUIT SWITCHER INSPECTION CHECKLIST

For use of this form see TM 5-694; the proponent agency is COE.

SECTION A - CUSTOMER DATA

1. PLANT/BUILDING Bldg 1929	2. LOCATION Fort Tank	3. JOB NUMBER 02-117
4. EQUIPMENT Switcher	5. CIRCUIT DESIGNATION P1	6. DATE *(YYYYMMDD)* 20020823
7. TEST EQUIPMENT TYPE/BRAND AND CALIBRATION DATE Sparls test set		8. TESTED BY John Smith

SECTION B - EQUIPMENT DATA

9. MANUFACTURER S&C	10. STYLES/S.O. air/5673	11. VOLTAGE RATING 35kV	12. CURRENT RATING 2000A
13. INTERRUPTING RATING 500MVA		14. BUS BRACING 500MVA	

SECTION C - VISUAL AND ELECTRICAL/MECHANICAL INSPECTION

15. CHECK POINT	COND*	NOTES	CHECK POINT	COND*	NOTES
EXTERIOR OF EQUIPMENT	A		EQUIPMENT IDENTIFICATION	A	
COMPLETENESS OF ASSEMBLY	A		BRACING	A	
ELECTRICAL/MECHANICAL INTERLOCKS	A		PROPER PHASE CONNECTION AND COLOR CODE	A	
PROPER GROUNDING	A		HAZARDOUS LOCATION	A	
ALIGNMENT AND ROTATION LIMITS	A		CONTACT RESISTANCE	A	
TIGHTNESS OF BOLTED CONNECTIONS	A		ANCHORAGE	A	
PROPER LUBRICATION	A		REFERENCE DRAWINGS	A	
INTERRUPTER TIME TRAVEL	A		CONTROL CIRCUIT OPERATION	A	
MANUAL OPERATION	A		ENERGIZED OPERATION	A	

SECTION D - ELECTRICAL TESTS

16. INSULATION RESISTANCE @ 5 kV	A-GRD	B-GRD	C-GRD	A-B	B-C	C-A
	50 megohm	75 megohm	60 megohm	80 megohm	85 megohm	80 megohm

17. MEASUREMENT DESCRIPTION	VOLTAGE AND CURRENT MEASUREMENTS										
	VOLTAGE**						CURRENT**				
	A-N	B-N	C-N	A-B	B-C	C-A	A	B	C	N	G
NA											
	A-N	B-N	C-N	A-B	B-C	C-A	A	B	C	N	G
NA											
	A-N	B-N	C-N	A-B	B-C	C-A	A	B	C	N	G
NA											

18. NOTES:
1. Insulation resistance test performed on de-energized bus.
2. Bolts not torqued properly. Situation corrected.

*CONDITION: A = ACCEPTABLE; R = NEEDS REPAIR, REPLACEMENT OR ADJUSTMENT; C = CORRECTED; NA = NOT APPLICABLE
**NOTE VALUE AND PHASING

DA FORM 7463-R, USAPA V1.00

Figure 4-8. Sample of completed DA Form 7463-R

TRANSFORMER INSPECTION CHECKLIST

For use of this form see TM 5-694; the proponent agency is COE.

SECTION A - CUSTOMER DATA

1. PLANT/BUILDING Bldg 358	2. LOCATION Fort Tank	3. JOB NUMBER 02-118
4. EQUIPMENT XFMR-T1	5. CIRCUIT DESIGNATION CKT-A	6. DATE (YYYYMMDD) 20020823
7. TEST EQUIPMENT TYPE/BRAND AND CALIBRATION DATE AEMC Megger, DTR, Biddle DLRO, Power Factor Test Set		8. TESTED BY John Smith

SECTION B - EQUIPMENT DATA

9. MANUFACTURER Cooper	10. STYLES/S.O. Oil-filled	11. VOLTAGE RATING 34500: 12470Y/7200	12. CURRENT RATING 25MVA
13. WET BULB TEMPERATURE 65 F	14. DRY BULB TEMPERATURE 85 F	15. ENCLOSURE TYPE	16. FREQUENCY 60hz

SECTION C - VISUAL AND ELECTRICAL/MECHANICAL INSPECTION

17. CHECK POINT	COND*	NOTES	CHECK POINT	COND*	NOTES
EXTERIOR OF EQUIPMENT	A		PROPER PHASE CONNECTION AND COLOR CODE	A	
COMPLETENESS OF ASSEMBLY	A		HAZARDOUS LOCATION	A	
PROPER GROUNDING	A		WORKING CLEARANCE	A	
CONDITION OF INSULATION	A		ANCHORAGE	A	
TIGHTNESS OF BOLTED CONNECTIONS	A		REFERENCE DRAWINGS	A	
SEALS AND OIL LEVELS	R	3.	TURNS RATIO MEASUREMENTS	A	
WINDING CONFIGURATION	A		AUXILIARY DEVICE OPERATION	A	

SECTION D - ELECTRICAL TESTS

18. INSULATION RESISTANCE	A-GRD	B-GRD	C-GRD	A-B	B-C	C-A
@ 5 kV	70 megohm	70 megohm	85 megohm			
POLARIZATION INDEX	2.5	2.7	2.7			
TURNS RATIO TEST						
POWER FACTOR	0.5	0.5	0.45			
PROPER VOLTAGE						

19. NOTES:

1. PERFORM GROUND RESISTANCE TESTS PRIOR TO ENERGIZING EQUIPMENT.
2. GROUND RESISTANCE TESTS MUST BE PERFORMED IN DRY CONDITIONS AND SHALL BE PERFORMED 48 HOURS AFTER RAINFALL.
3. REPLACE GASKET.

*CONDITION: A - ACCEPTABLE; R - NEEDS REPAIR, REPLACEMENT OR ADJUSTMENT; C - CORRECTED; NA - NOT APPLICABLE

DA FORM 7464-R, USAPA V1.00

Figure 4-9. Sample of completed DA Form 7464-R

SWITCHGEAR INSPECTION CHECKLIST

For use of this form see TM 5-694; the proponent agency is COE.

SECTION A - CUSTOMER DATA

1. PLANT/BUILDING	2. LOCATION	3. JOB NUMBER
Bldg 316	Fort Tank	02-119

4. CIRCUIT DESIGNATION	5. CIRCUIT FED FROM	6. CIRCUIT FED TO	7. DATE (YYYYMMDD)
F5	Main bus	F2	20020823

8. TEST EQUIPMENT TYPE/BRAND AND CALIBRATION DATE	9. ENCLOSURE TYPE	10. TESTED BY
AVO 414/ 5 Aug 2002	Air	John Smith

SECTION B - EQUIPMENT DATA

11. MANUFACTURER	12. STYLES/S.O.	13. VOLTAGE RATING	14. CURRENT RATING
Siemens		600V	2000A

15. INTERRUPTING RATING	16. BUS BRACING
50 kA	50 MVA

SECTION C - VISUAL AND ELECTRICAL/MECHANICAL INSPECTION

17. CHECK POINT	COND*	NOTES	CHECK POINT	COND*	NOTES
EXTERIOR OF EQUIPMENT	A		EQUIPMENT IDENTIFICATION	A	
REFERENCE DRAWINGS	A		BRACING	A	
ELECTRICAL/MECHANICAL DRAWOUT MECHANISM AND INTERLOCKS	A		PROPER PHASE CONNECTION AND COLOR CODE	A	
BUS AND SUPPORT INSULATORS	A		HAZARDOUS LOCATION	A	
PROPER LUBRICATION	A		WORKING CLEARANCE	A	
CLEAN SWITCHGEAR	A		ANCHORAGE	A	
CHECK MANUAL OPERATION OF CIRCUIT BREAKERS AND RELAYS	A		ALL FILTERS AND VENTS CLEAR	A	
TEST RELAYS (ACCORDING TO ELEC. STUDY RECOMMENDATIONS)	A		CHECK PROPER EQUIPMENT GROUNDING TO GROUNDING BUS	A	
CHECK INSTRUMENT AND RELAY COVERS	A		SWITCHES FOR FREEDOM OF MOVEMENT	A	
CHECK CIRCUIT BREAKER INSULATING PARTS	A		CHECK INCOMING LINE CONNECTIONS TO MAIN BUS	A	
CHECK CIRCUIT BREAKER CONTACT SURFACES	A		VERIFY PROPER SIZE BREAKERS/FUSES	A	

18. VERIFY LIFT OR BUILT WINCH FOR HANDLING HEAVY PARTS	19. VERIFY CORRECT OPERATION OF INDICATING LIGHTS, METERS, GAUGES, ETC.
20. VERIFY BOLTED BUS CONNECTIONS TO MANUFACTURER RECOMMENDATIONS	21. VERIFY SPACE HEATER IS PROVIDED AND OPERATIONAL

SECTION D - ELECTRICAL TESTS

22. INSULATION RESISTANCE @ 1000 V	A-GRD	B-GRD	C-GRD	A-B	B-C	C-A

23. MEASUREMENT DESCRIPTION	VOLTAGE AND CURRENT MEASUREMENTS										
	VOLTAGE**						CURRENT**				
Main Secondary M1	A-N	B-N	C-N	A-B	B-C	C-A	A	B	C	N	G
	277	277	278	482	479	480	250	240	230	15	1.5
	A-N	B-N	C-N	A-B	B-C	C-A	A	B	C	N	G
	A-N	B-N	C-N	A-B	B-C	C-A	A	B	C	N	G

24. NOTES

1. VOLTAGE MEASUREMENTS TO BE MADE AFTER UTILITY SOURCE IS CONNECTED TO INCOMING BREAKER WITH THE UTILITY BREAKER OPEN.
2. INSULATION RESISTANCE TESTS MUST BE PERFORMED PRIOR TO ENERGIZING EQUIPMENT.

*CONDITION: A = ACCEPTABLE; R = NEEDS REPAIR, REPLACEMENT OR ADJUSTMENT; C = CORRECTED; NA = NOT APPLICABLE
**NOTE VALUE AND PHASING

DA FORM 7465-R, USAPA V1.00

Figure 4-10. Sample of completed DA Form 7465-R

POWER CABLE INSPECTION CHECKLIST

For use of this form see TM 5-694; the proponent agency is COE.

SECTION A - CUSTOMER DATA

1. PLANT/BUILDING Bldg M-1	2. LOCATION Fort Tank	3. JOB NUMBER 02-120
4. EQUIPMENT Cable	5. CIRCUIT DESIGNATION F1	6. DATE *(YYYYMMDD)* 20020823
7. TEST EQUIPMENT TYPE/BRAND AND CALIBRATION DATE AVO		8. TESTED BY John Smith

SECTION B - EQUIPMENT DATA

9. MANUFACTURER Rome	10. STYLES/S.O. XLP	11. VOLTAGE RATING 15 kV	12. CURRENT RATING 500 MCM
13. WET BULB TEMPERATURE 65 F	14. DRY BULB TEMPERATURE 85 F	15. ENCLOSURE TYPE	16. FREQUENCY 60 hz

SECTION C - VISUAL AND ELECTRICAL/MECHANICAL INSPECTION

17. CHECK POINT	COND*	NOTES	CHECK POINT	COND*	NOTES
EXTERIOR OF CABLE RUN	A		BRACING AND SUPPORTS	A	
PROPER GROUNDING AT TERMINAL LUGS TO BUS	A		CHECK PROPER SIZE OF CABLE	A	
REFERENCE EXISTING 1-LINE DIAGRAMS	A		TIGHTNESS AND NEATNESS OF TERMINATIONS	A	
PROPER LUBRICATION	A		ANCHORAGE	A	
CHECK GROUNDING AT SPLICE JOINTS	A		CHECK PROPER SIZE TERMINAL LUGS AND MATERIAL	A	
CHECK CABLE PHASE COLOR CODE	A		CHECK CABLE PHASE COORDINATION	A	
SHIELD CONTINUITY	R	2.	CABLE IDENTIFICATION	A	

SECTION D - ELECTRICAL TESTS

18. INSULATION RESISTANCE	A-GRD	B-GRD	C-GRD	A-B	B-C	C-A
APPLIED VOLTAGE 15 Kv	20 megohm	30 megohm	35 megohm			

19. NOTES

1. PERFORM HIGH POTENTIAL TESTS IN ACCORDANCE WITH SPECIFIED REQUIREMENTS OR MANUFACTURER(S) RECOMMENDATIONS.
2. GROUND SHIELDS WERE NOT TERMINATED PROPERLY.

*CONDITION: A = ACCEPTABLE; R = NEEDS REPAIR, REPLACEMENT OR ADJUSTMENT; C = CORRECTED; NA = NOT APPLICABLE

DA FORM 7466-R, USAPA V1.00

Figure 4-11. Sample of completed DA Form 7466-R

MAIN POWER ENERGIZATION CHECKLIST

For use of this form see TM 5-694; the proponent agency is COE.

SECTION A - CUSTOMER DATA

1. PLANT/BUILDING	2. LOCATION	3. JOB NUMBER
Bldg 2582	Fort Tank	02-121

4. CIRCUIT DESIGNATION	5. CIRCUIT FED FROM	6. CIRCUIT FED TO	7. DATE *(YYYYMMDD)*
Main	Utility	Output CB	20020823

8. TEST EQUIPMENT TYPE/BRAND AND CALIBRATION DATE	9. TESTED BY
Fluke 45/ 7 Aug 2002	John Smith

SECTION B - VISUAL AND ELECTRICAL/MECHANICAL INSPECTION

10. CHECK POINT	COND*	NOTES	CHECK POINT	COND*	NOTES
COMPONENT INSPECTION/TESTING COMPLETED	A		VERIFY SWITCHGEAR CONTROL FUNCTIONS	A	
WIRING VISUAL VERIFICATION	A		CHECK FOR WORKING CLEARANCE	A	
VERIFY WIRING DIAGRAMS	A		ENERGIZE AND TEST SYSTEM	A	
VERIFY CIRCUIT SWITCHER CONTROL FUNCTIONS	A		TRANSFORMER TRANSFER CONTROL FUNCTIONS	A	
ENERGIZE AND TEST SYSTEM FOR ALL CONDITIONS	A		CHECK FOR UNUSUAL SOUNDS AFTER ENERGIZING	A	
CHECK BUSHING OR TERMINALS	A		CHECK ANCHORING OF TRANSFORMER SWITCHGEAR AND SWITCHES ENCLOSURE	A	
CHECK FOR REMOVAL OF PAINT OR HEAVY DENTS	A		CHECK FOR NORMAL/ABNORMAL SWITCHING OPERATION	A	

SECTION C - ELECTRICAL TESTS

11. MEASUREMENT DESCRIPTION	VOLTAGE AND CURRENT MEASUREMENTS										
	VOLTAGE**						CURRENT**				
Main Feed	A-N	B-N	C-N	A-B	B-C	C-A	A	B	C	N	G
	7630	7630	7630	13kV	13kV	13kV	1200	1150	1200	125	5
F1	A-N	B-N	C-N	A-B	B-C	C-A	A	B	C	N	G
F2	A-N	B-N	C-N	A-B	B-C	C-A	A	B	C	N	G
F3	A-N	B-N	C-N	A-B	B-C	C-A	A	B	C	N	G
	A-N	B-N	C-N	A-B	B-C	C-A	A	B	C	N	G

12. NOTES

1. Main circuit breaker did not open manually.
2. Voltage/current measurements should be compared with switchgear meters.

*CONDITION: A = ACCEPTABLE; R = NEEDS REPAIR, REPLACEMENT OR ADJUSTMENT; C = CORRECTED; NA = NOT APPLICABLE
**NOTE VALUE AND PHASING

DA FORM 7467-R, USAPA V1.00

Figure 4-12. Sample of completed DA Form 7467-R

CHAPTER 5

STANDBY POWER SYSTEM

5-1. Description of standby power system

The following is a sample standby power system with associated one-line and wiring diagrams for use as a guide for implementing the test procedures described in the preceding chapters of this manual. A system functional performance test shall be performed on the system. The system shall be operated through all modes of systems operation including every interlock and conditional control logic, full load and part load conditions, and simulation of all abnormal conditions where there is a specific condition response. The system consists of the following equipment: 480V switchgear with utility, generator switchgear, and 500 KW, 480V generators with control panel, and synchronizing/paralleling panel. The equipment, accessories, interconnections, ratings, cabling, etc. are shown on figures 5-1 through 5-3. Figure 5-1 is the standby power system single line diagram on page 5-6. Figure 5-2 is the standby power system block diagram on page 5-7. Figure 5-3 is a diagram of the standby power system wiring on page 5-8. The system provides normal and standby 480V power to the Facility. Under normal conditions power is supplied from the utility through the Utility Power Center to the Facility Plant Load Center which feeds the facility loads. When utility power is lost, the diesel generators will supply power through the utility load center until normal power is restored. The 480V switchgear is metal enclosed and free standing with drawout air power circuit breakers. The main utility, generator breakers, and the facility load breaker are electrically/manually operated. The breakers have instantaneous short time and long time settings. Breaker controls and indication are located on the door of each breaker compartment. The main bus and incoming line have potential transformers connected to a synchronizing check (25) relay, and an undervoltage (27) relay. The 25 relay will not allow the utility breaker to be closed unless the switchgear bus and utility line are synchronized. The 27 relay opens the utility line breaker upon a loss of power (i.e. undervoltage). The 500 kW, 480 V Generator sets include air cooled individual four cycle diesel engines, three phase, four wire generators, and paralleling/synchronizing control systems. The control system allows starting, stopping, loading, paralleling, and synchronizing of the generator to the system in the auto or manual mode while monitoring for equipment and system problems.

5-2. Operation of standby power system

The operating modes for the systems are as follows. These steps would be included in the systems operating document (SOD).

a. Normal condition. Under normal conditions, the utility power supply is energized, the utility breaker is closed, the load center circuit breaker is closed and the circuit breakers for the individual generators are open. The generators are not operating.

b. Loss of power. In the event of the loss of utility power, the utility power center 27 relay sends an open signal to the utility breaker, the load center circuit breaker, and a start signal to the generators. The generators operate either automatically or manually depending on mode selected. The generators will follow each other for load sharing and phasing. In the automatic mode, when the first generator is at the proper operating voltage and frequency, the controls system sends a close signal to that generator's breaker. This generator becomes the lead machine. As the next generator picks up speed, the controls system compares the outputs from that generator's potential transformers and the bus potential transformer and when the voltage and frequency are synchronized, a close signal is sent from the synchronizer to the second generator breaker. This process is again repeated for the third generator. When all available generators are operating in parallel, a signal is sent to close the load center circuit

breaker. In manual operation, the operator controls the diesel generator voltage and speed until the diesel generator is synchronized with other generators and then manually closes the diesel generator breaker. The operator repeats this process for each diesel generator set and then manually closes the load center circuit breaker.

c. Paralleling with utility. In the event that it is desired to parallel with the utility, the system will operate in either the automatic or manual mode. In the auto mode, the generators will automatically synchronize with the utility bus and their breakers will close. In auto/manual mode, the generators will automatically synchronize with the utility bus but the breakers will be manually closed. In manual operation, the operator controls the generator voltage and speed until the diesel generator is synchronized with the bus voltage and then manually closes the diesel generator breaker. The operator repeats this process for each diesel generator set.

d. Restoration of utility. In the event of a loss of utility power the generators are running and supplying the load. The utility breaker is open and all of the generator breakers are closed. When the utility power is restored, the operator manually adjusts the generator speed and voltage very slowly until the sync check relay on the utility load center is energized and illuminates the sync check light. The operator manually closes the utility breaker and then manually trips the generator breakers at the generators control panels. For systems that employ automatic synchronizing devices, it is possible for the system to synchronize to the utility and transfer power from the generator sets to the utility without operator intervention. The automatic synchronizing devices adjust the generator speed and voltage until the generator is in sync with the utility. Then the utility breaker is automatically closed and the generator breaker is automatically tripped.

5-3. Commissioning plan for standby power system

A system verification and functional performance test should be performed on the standby power system. These tests will include installation inspections and individual component testing verification and ring out of wiring, control and interlock function checks, equipment energization, and system operating measurements and functional tests.

5-4. Installation inspections and component testing of standby power system

As indicated in chapter 3, the installation of main components (i.e. generator, switchgear, cabling) each will be inspected or tested for the following. These checks can be considered part of the pre-checks or functional performance tests (FPTs).

a. Generator. Completeness of assembly, proper nameplate data, loose parts and insulation damage, generator air gap and free rotation, generator insulation resistance (phase-to-phase and phase-to-ground), generator polarization index, grounding and proper voltage and phase connections. Figure 5-5 on page 5-10 and 11 shows a sample of a completed DA Form 7468-R for the generator inspection.

b. Engine. Completeness of assembly, proper nameplate data, loose parts, and proper lubrication.

c. Switchgear. Completeness of assembly, proper nameplate data, loose parts and insulation damage, breaker alignment and manual operation, proper relay settings, bus insulation resistance (phase-to-phase and phase-to-ground), grounding, proper voltage and phase connections and potential transformer and control fuse size and continuity. See Figure 4-10 on page 4-16 for sample checklist (DA Form 7465-R).

d. Cabling. Proper use of voltage connections, tightness and neatness of terminations, power cable insulation resistance (phase-to-phase and phase-to-ground). See figure 4-11 (DA Form 7466-R) for sample checklist.

e. Visual and electrical wiring inspections. The termination of each cable, shown on the cable block diagram, shall be checked to ensure each conductor matches the wiring and schematic diagram. This is performed by yellowing each connection from the schematic to the wiring diagram; visually inspecting each connection; and checking the continuity or "ringing out" each wire end to end including grounds. For example Cable PWR1 from Diesel Generator 1 to the 480V Load Center should be checked to verify that the "black" wire is terminated as follows which is shown on figure 5-3:

Equipment	Terminal No.
Diesel Generator 1	L1
480V Load Center	T1

As this is done, the wire on each drawing should be colored or highlighted to show its termination has been checked. This process should be completed for all field wiring as a minimum and internal wiring if not previously performed at the factory.

f. Check control functions. Individual circuits of each component shall be energized and checked for proper function.

(1) Generator. Energize control circuit with outgoing circuit breaker open and verify correct operation of indicating lights, alarms, analog outputs and status outputs (list). Locally start the generator following the manufacturer's instructions for energizing and starting. Verify machine comes up to speed and correct operation of indicating lights, alarms, analog outputs and status outputs. Measure output voltage and frequency. Check remote stop and then remote start functions, external load set function, watt/VAR/voltage outputs, trip and circuit breaker interlocks and other no-load functions specifically required by the generator instruction manual, if any. Energize and verify the operation of any accessory circuits (i.e. generator heaters, fuel heaters, battery chargers).

(2) 480V switchgear. Verify manual operation and local position indication of the main and generator breakers with feeder cables disconnected or breakers racked out. Check the calibration of undervoltage and sync relays in the main breaker control circuit per the manufacturer's instructions. Energize the main breaker control circuit and close the breaker electronically using the control switch. Verify proper operation of lights. Trip the main circuit breaker using the control switch and the undervoltage relay. Verify the 27 relay is not engaged when the switchgear bus is deenergized.

5-5. Energizing and test of the standby power system

In order to energize and test the standby power systems the following procedures must be completed.

a. Initial set-up. Verify that generator circuit breakers are open and the generators are ready to start

b. Bus test. Close 480V switchgear main and feeder breakers, check voltage on bus, and verify 27 relay is energized. Read voltage and current on bus.

c. Manual sync/paralleling test. While 480 V switchgear bus is energized, place each generator in the manual sync mode. Start the first generator and verify it comes up to speed and is ready to take load (a load bank should be used). Manually adjust the speed and voltage of the first generator to be in sync with the 480V switchgear, verify with phase meters that both are in sync and close the first generator's circuit

breaker. Verify that the generator picks up load. Measure voltage, current and frequency. Repeat this process for the other two generators. As each generator is connected, verify load is shared equally between the generators. Measure the voltage, current and frequency for each generator as it is connected. Repeat the entire process starting with the second generator and then again starting with the third generator to ensure that any one of the three generators can act as the starting generator.

d. Auto sync/paralleling test. Repeat the previous step with each generator in the auto sync mode. Each generator should automatically synchronize and close into the 480V switchgear bus.

e. Utility trip load test. Verify that the 480V main breaker is closed and the switchgear is energized. Measure voltage and current on the bus. Verify that the generator breakers are open and the synchronizers are in the auto mode. Trip the 480V main breaker (remove normal power supply). This causes the load center circuit breaker to open. Verify that all three generators start, synchronize, and pick up load (load center circuit breaker closes). Add load until each generator is fully loaded. Run the system for at least 4 hours powered only by the generators. Reconnect utility power and note if sync check relay in the 480V utility breaker is picked up. If not, slowly adjust the speed and voltage of the first generator until the relay is picked up indicating the generators are in sync with the utility. The speed and voltage of the second and third generators should follow the first generator as it is adjusted. Verify that the 480V switchgear bus voltage is in sync with the utility with a phase/voltage meter and close the 480V main breaker.

f. Checklists. In addition to the component test forms discussed above, checklists for utility and generator circuit breaker inspection (see figure 5-6 for completed sample of DA Form 7469-R) and back-up power system inspection (see figure 5-7 for completed sample DA Form 7570-R) must be satisfactorily completed.

g. Modified sequence of operations. The standby power system should be operated in commissioning for all possible sequences of operations that a system will encounter.

5-6. Possible failures and corrective actions of standby power system

Table 5-1 lists general problems that may arise during the testing of the equipment and systems along with possible troubleshooting techniques. For all problems, consult the equipment and component manuals for troubleshooting directions, check fuses/lights/breakers/etc. for continuity, check equipment calibration and settings, and look for faulty equipment or connections. Engine manufacturers typically provide a fault tree for troubleshooting problems. Figure 5-4 is a typical fault tree. The fault tree tracks the symptoms of the problems to identify the most probable cause. For example, if the engine will not run and the starter turns the engine slowly then there is a problem with the battery. The causes of the problem are either loose or dirty connections or a discharged battery.

Table 5-1. Possible failures and corrective actions of standby power system

Engine Problem	Areas to Check
Will not start	Starter, battery, and connections; fuel system, level, pump, injectors, internal engine (valves, tappets, pistons), ignition system (gas engines) control system interlocks/permissives, mis-wired circuits
Poor Performance/Will not handle load	Fuel system and cleanliness, injectors or carburetor, internal engine, control and ignition system, system kW requirements

Table 5-1. Possible failures and corrective actions of standby power system (continued)

Generator Problem	Areas to Check
No Output Voltage/Current	Check stator and rotor continuity, battery fluid level, diode pack, voltage regulator, control system and interlocks, miss-wired circuits
Failure to synchronize	Mis-wired circuits, blown PT fuses, governor/regulator not calibrated properly
Failure to share load	Mis-wired circuits, governor/regulator not calibrated properly

480V Switchgear Problem	Areas to Check
Breakers won't close	Mechanical alignment/ interlocks, control circuit operation, relay and protective device settings and operation, close coil and mechanism, mis-wired circuits. Check control voltage.
Breakers won't trip	Trip coil and mechanism, control circuitry operation, mis-wired circuits
Breakers trip inadvertently	Ground on bus or outgoing cable, relay and protective device settings and operation, control circuitry operation, mis-wired circuits. Check control voltage.

Back-Up Power System Problem	Areas to Check
Generator Breakers will not close	Control circuitry operation, auto/manual sync system, generator control system, mis-wired circuits. Check control voltage.
Generator will not pick up load or stalls/trips	Engine fuel and control system, generator voltage regulator, generator control system, auto/manual sync system, protective device settings, mis-wired circuits
Generators don't share load	Paralleling control system, mis-wired circuits, interconnecting unit control wiring governor control systems, voltage regulating systems
Main switchgear breaker won't re-close on diesel generator powered system	Generator sync system, breaker sync check relay, breaker control circuitry, mis-wired circuits. Verify "as builts" reflect actual circuit conditions.

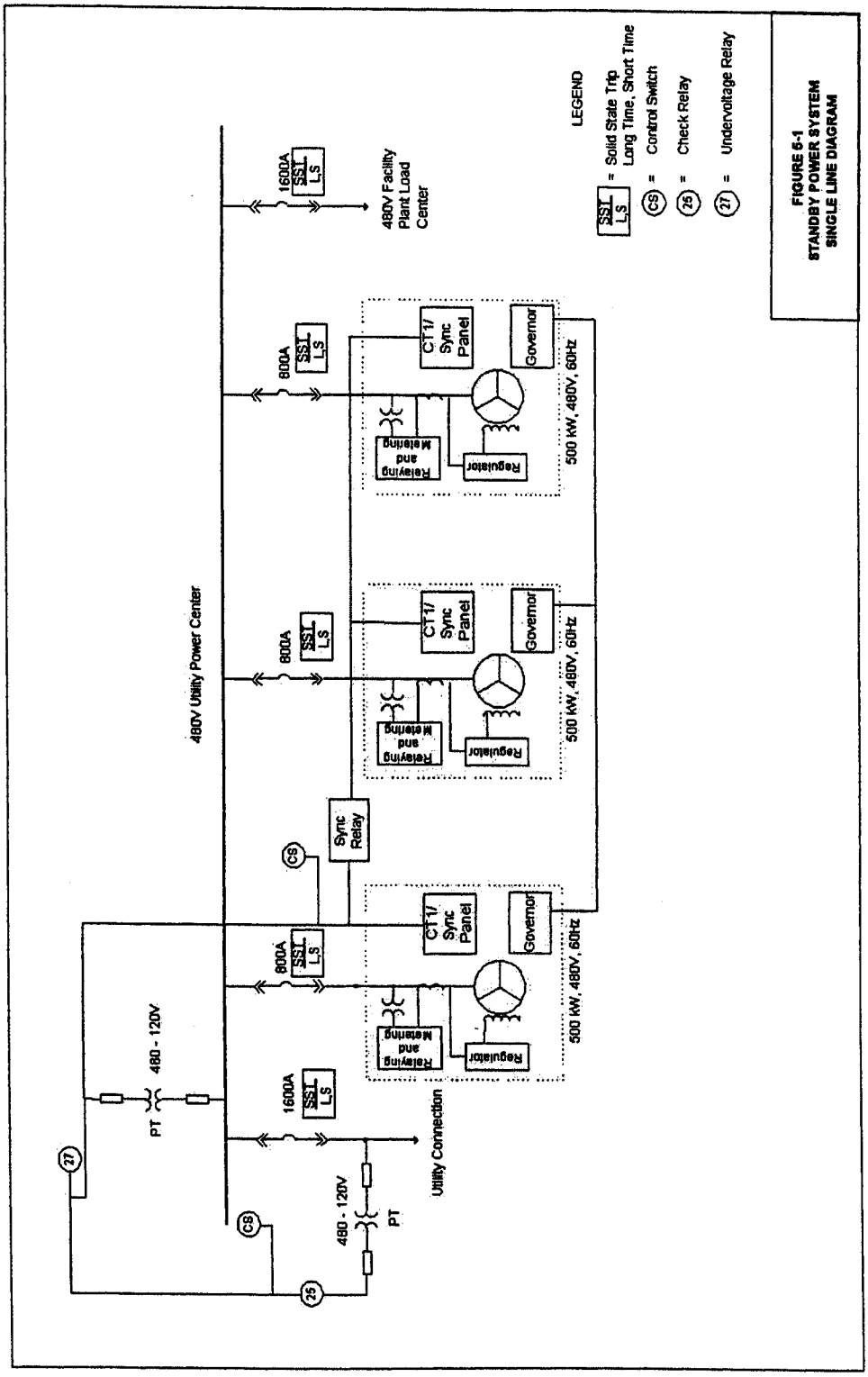

FIGURE 5-1
STANDBY POWER SYSTEM
SINGLE LINE DIAGRAM

Figure 5-1. Standby power system single line diagram

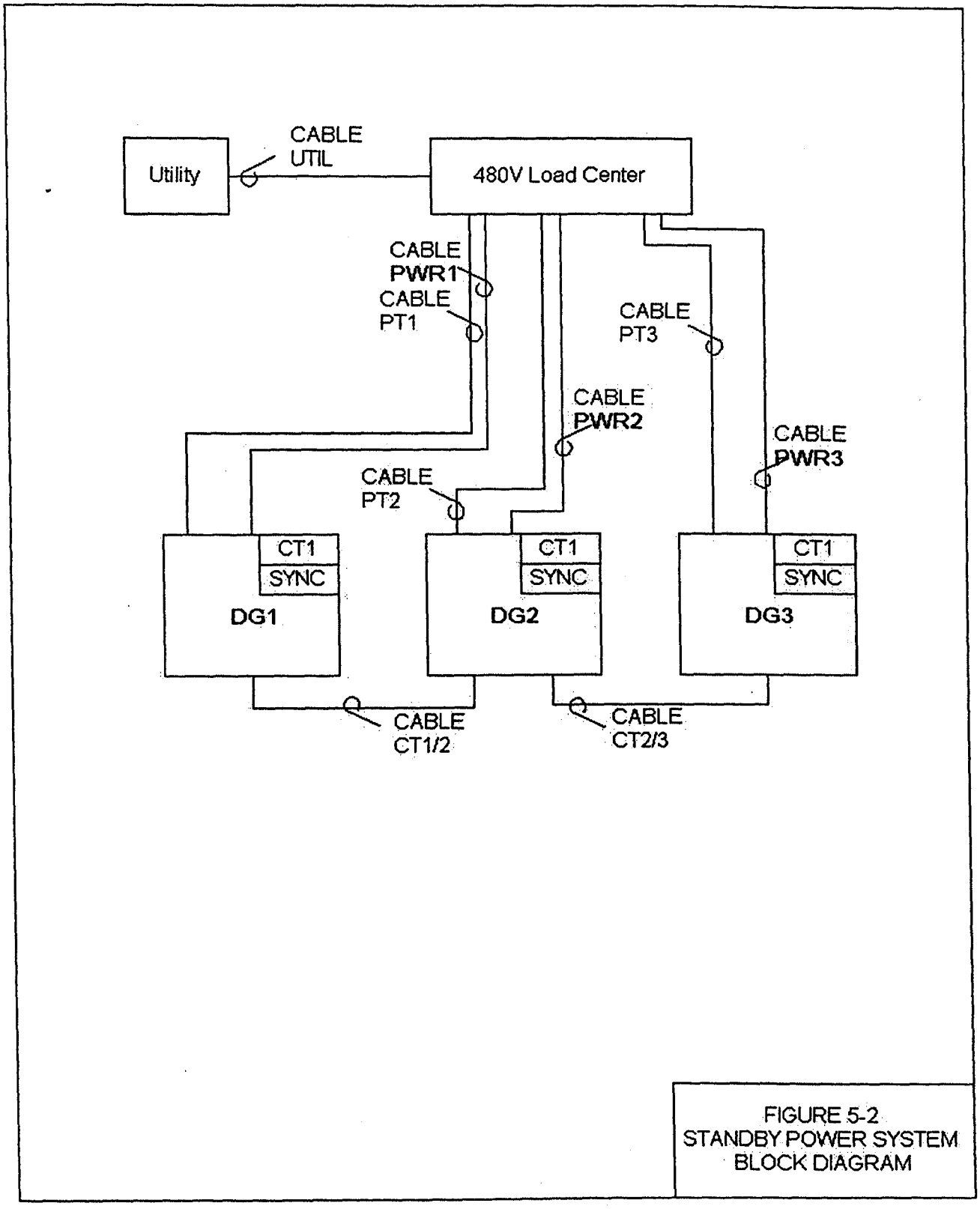

Figure 5-2. Standby power system block diagram

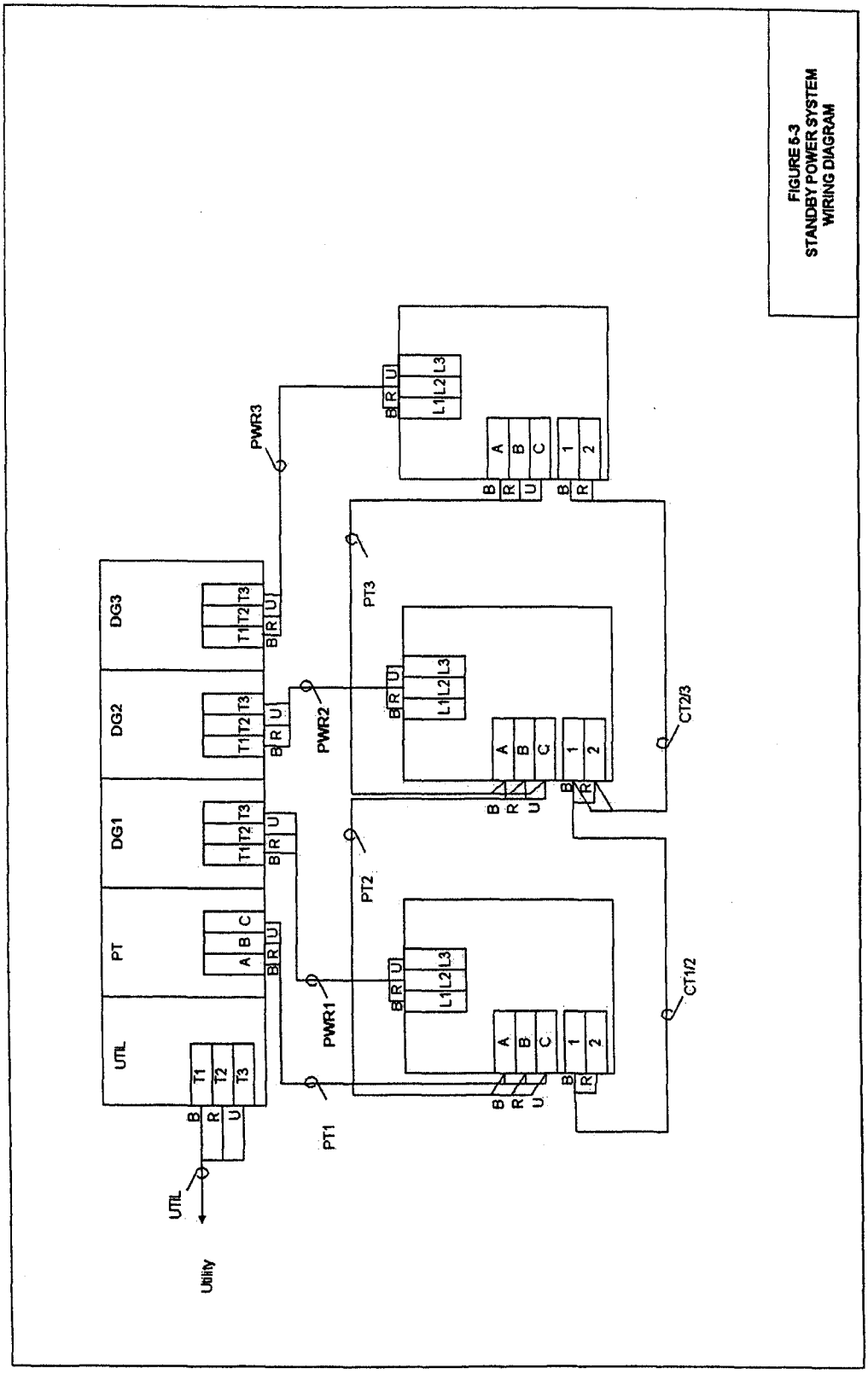

Figure 5-3. Standby power system wiring diagram

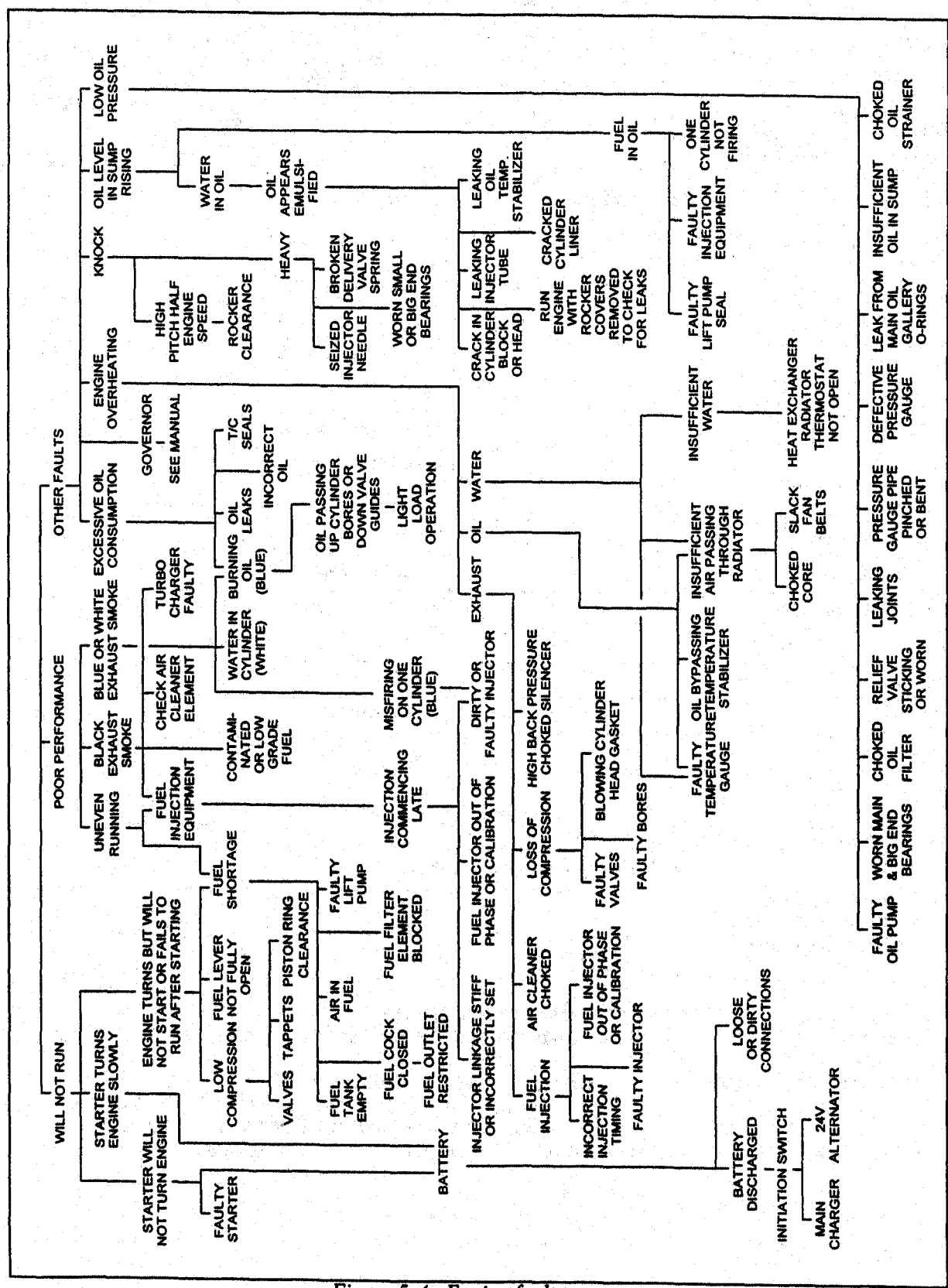

Figure 5-4. Engine fault tree

ENGINE GENERATOR SET INSPECTION CHECKLIST

For use of this form see TM 5-694; the proponent agency is COE.

SECTION A - CUSTOMER DATA

1. PLANT/BUILDING Bldg 1929	2. LOCATION Fort Tank	3. JOB NUMBER 02-122
4. EQUIPMENT Genset	5. CIRCUIT DESIGNATION G1	6. DATE *(YYYYMMDD)* 20020823
7. TEST EQUIPMENT TYPE/BRAND AND CALIBRATION DATE Biddle Insulation Tester/ 5 July 2002		8. TESTED BY John Smith

SECTION B - EQUIPMENT DATA

9. MANUFACTURER CAT	10. STYLES/S.O. Diesel 3416	11. VOLTAGE RATING 4160	12. kW RATING 500kW
13. CIRCUIT BREAKER SIZE/INTERRUPTING RATING 300A/ 50kA		14. WET BULB TEMPERATURE 65 F	15. DRY BULB TEMPERATURE 85 F

SECTION C - VISUAL AND ELECTRICAL/MECHANICAL INSPECTION

16. CHECK POINT	COND*	NOTES	CHECK POINT	COND*	NOTES
EXTERIOR OF EQUIPMENT	A		EQUIPMENT IDENTIFICATION	A	
COMPLETENESS OF ASSEMBLY	A		BRACING	A	
EQUIPMENT ROTATION	A		PROPER PHASE CONNECTIONS	A	
CHECK OIL LEVEL	A		REFERENCE DRAWINGS	A	
CHECK FUEL LEVEL	A		WORKING CLEARANCE	A	
PROPER EQUIPMENT GROUNDING	A		ANCHORAGE	A	
CHECK METERS/GAUGES	A		ALL FILTERS AND VENTS CLEAR	A	
TIGHTNESS OF BOLTED CONNECTIONS	A		CHECK EQUIPMENT ENVIRONMENTAL CLASSIFICATION	A	
VERIFY GOVERNOR AND REGULATOR	A		CHECK FOR PROVISIONS OF SPILL CONTAINER	A	
CHECK VIBRATION	A		CONTROL SYSTEM	A	
CHECK BATTERIES	A		CHECK FUEL FILTER	A	
CHECK RADIATOR FLUID	A		CHECK ALARM INDICATORS: PROPER COLOR FOR EACH FUNCTION	A	
PROPER SYSTEM GROUND	A				

SECTION D - ELECTRICAL TESTS

17. INSULATION RESISTANCE	A-GRD	B-GRD	C-GRD	A-B	B-C	C-A
@ 2500 V	10 megohm	12 megohm	14 megohm			
POLARIZATION INDEX RATIO - 10 MINUTE/1 MINUTE	2.1	2.2	2.3			
DC OVERPOTENTIAL TEST @ V	notes 1 & 2					

18. NOTES

1. PERFORM 5 MEASUREMENTS AT ONE MINUTE INTERVALS.
2. DC HIPOT MEASUREMENTS SHOULD BEGIN AT 20% OF MAXIMUM TEST VOLTAGE AND INCREASE IN EQUAL INTERVALS.

MAX DC TEST VOLTAGE = R (2 x NAMEPLATE RATING) x 1.6

WHERE R = .8 FOR DC TEST ON INSTALLATION

WHERE R = .6 FOR DC TEST AFTER SERVICE

(TEST MEASUREMENTS SHOULD NOT EXCEED MANUFACTURER'S RECOMMENDATION)

DA FORM 7468-R, AUG 2002

PAGE 1 OF 2

USAPA V1.00

Figure 5-5. Sample of completed DA Form 7468-R (side1)

SECTION D - ELECTRICAL TESTS *(Continued)*

19. MEASUREMENT DESCRIPTION	VOLTAGE AND CURRENT MEASUREMENTS										
	VOLTAGE**						CURRENT**				
	A-N	B-N	C-N	A-B	B-C	C-A	A	B	C	N	G

20. LOAD TESTS AS A PERCENTAGE OF GENERATOR RATING

	NO LOAD	25 %	75 %	100 %	110% (PRIME ENGINE ONLY)
A-N	2400	2400	2395	2389	
B-N	2400	2400	2395	2395	
C-N	2400	2400	2392	2390	
A-B	4160	4160	4158	4155	
B-C	4160	4160	4157	4150	
C-A	4160	4160	4158	4160	
A	0	17.5A	52A	70A	
B	0	17A	49A	69A	
C	0	17A	50A	68A	
N	0	0.5A	1.4A	1.5A	
G	0	0.3A	0.4A	0.5A	

21. NOTES

1. VOLTAGE MEASUREMENT TO BE MADE AFTER GENERATOR IS STARTED AND CONNECTED TO LOAD (CAN USE LOAD BANK).

2. DURING COMMISSIONING OF GENERATOR SETS OR ANY EQUIPMENT, A REPRESENTATIVE OF THE MANUFACTURING COMPANY OR SUPPLIER MUST BE PRESENT TO WITNESS AND/OR PERFORM THE TESTS.

3. ENGINE GENERATOR TESTING IS A VERY INTENSIVE PROCESS AND REQUIRES A 10 TO 14 HOUR DAY DEPENDING ON THE EQUIPMENT BEING COMMISSIONED. SUPPLIER/MANUFACTURER NORMALLY SUPPLY GENERATOR TESTING LOAD REQUIREMENTS.

4. VERIFY ALL SYSTEM CHECK POINTS DURING LOAD CHANGES AND RECORD PER SPECIFIED REQUIREMENTS AND/OR EQUIPMENT MANUFACTURER.

5. PERFORM AND RECORD ENGINE MANUFACTURER'S RECOMMENDED CHECKS AND INSPECTIONS.

*CONDITION: A - ACCEPTABLE; R - NEEDS REPAIR, REPLACEMENT OR ADJUSTMENT; C - CORRECTED; NA - NOT APPLICABLE
**NOTE VALUE AND PHASING

DA FORM 7468-R, AUG 2002

PAGE 2 OF 2
USAPA V1.00

Sample of completed DA Form 7468-R (side 2)

UTILITY AND GENERATOR CIRCUIT BREAKER INSPECTION CHECKLIST

For use of this form see TM 5-694; the proponent agency is COE.

SECTION A - CUSTOMER DATA

1. PLANT/BUILDING Bldg 358	2. LOCATION Fort Tank	3. JOB NUMBER 02-123
4. EQUIPMENT CB1	5. CIRCUIT DESIGNATION Feeder 1	6. DATE *(YYYYMMDD)* 20020823
7. TEST EQUIPMENT AND CALIBRATION DATE AVO Tester/ 7 Mar 2002		8. TESTED BY John Smith

SECTION B - EQUIPMENT DATA

9. MANUFACTURER AVO	10. STYLES/S.O.	11. VOLTAGE RATING 600V	12. CURRENT RATING 2000A
13. CIRCUIT BREAKER SIZE AND INTERRUPTING RATING 200A/ 50kA		14. EQUIPMENT CLASSIFICATION Air	15. FREQUENCY 60hz

SECTION C - VISUAL AND ELECTRICAL/MECHANICAL INSPECTION

16. CHECK POINT	COND*	NOTES	CHECK POINT	COND*	NOTES
EXTERIOR OF EQUIPMENT	A		BRACING	A	
COMPLETENESS OF ASSEMBLY	A		PROPER PHASE CONNECTIONS AND COLOR CODE	A	
EXECTRICAL/MECHANICAL INTERLOCKS	A		HAZARDOUS LOCATION	A	
PROPER GROUNDING	A		WORKING CLEARNACE	A	
CONTACT RESISTANCE	A		ANCHORAGE	A	
AUXILIARY WIRING	A		REFERENCE DRAWINGS	A	
PROPER LUBERICATION	A		CHECK MANUAL OPERATION OF CIRCUIT BREAKER AND RELAYS	A	
TIGHTNESS OF BOLTED CONNECTIONS	A		RELAYS TESTED (ACCORDING TO ELECTRICAL STUDY RECOMMENDATIONS)	A	
EQUIPMENT IDENTIFICATION	A				

SECTION D - ELECTRICAL TESTS

17. INSULATION RESISTANCE	A-GRD	B-GRD	C-GRD	A-B	B-C	C-A
@ 1000 V	10 megohm	12 megohm	12 megohm			

18. NOTES

1. MANUFACTURER'S INSTALLATION TESTS/CHECKS SHOULD BE IMPLEMENTED.

*CONDITION: A - ACCEPTABLE; R - NEEDS REPAIR, REPLACEMENT OR ADJUSTMENT; C - CORRECTED; NA - NOT APPLICABLE
**NOTE VALUE AND PHASING

DA FORM 7469-R, AUG 2002 USAPAV1.00

Figure 5-6. Sample of completed DA Form 7469-R

BACK-UP POWER SYSTEM INSPECTION CHECKLIST

For use of this form see TM 5-694; the proponent agency is COE.

SECTION A - CUSTOMER DATA

1. PLANT/BUILDING	2. LOCATION	3. JOB NUMBER
Bldg 316	Fort Tank	02-131
4. EQUIPMENT	**5. CIRCUIT DESIGNATION**	**6. DATE (YYYYMMDD)**
Switchgear/ controls	Main	20020823
7. TEST EQUIPMENT AND CALIBRATION DATE		**8. TESTED BY**
Fluke 45/ 7 Aug 2002		John Smith

SECTION B - EQUIPMENT DATA

9. MANUFACTURER	10. STYLES/S.O.	11. VOLTAGE RATING	12. CURRENT RATING
Siemens		5 kV	2000A
13. EQUIPMENT CLASSIFICATION	**14. FREQUENCY**	**15. WET BULB TEMPERATURE**	**16. DRY BULB TEMPERATURE**
Outdoor	60hz	65 F	85 F

SECTION C - VISUAL AND ELECTRICAL/MECHANICAL INSPECTION

17. CHECK POINT	COND*	NOTES	CHECK POINT	COND*	NOTES
COMPONENT INSPECTION/TESTING	A		WIRING VISUAL VERIFICATION	A	
ENERGIZE AND TEST SYSTEM	A		UTILITY TRIP/GENERATOR BUILDING LOAD TEST	A	
INSTALLATION INSPECTION/TESTING	A		TIGHTNESS OF BOLTED CONNECTIONS	A	
GENERATOR CONTROLS AND FUNCTIONS	A		CHECK FOR PROPER SIZE BREAKER	A	
WIRING CONTINUITY TESTING	A		REFERENCE DRAWINGS	A	
WORKING CLEARANCE	A		PROPER PHASING CONNECTIONS AND COLOR CODE	A	
SWITCHGEAR CONTROL FUNCTIONS	A				
PERFORM AUTOMATIC TRANSFER SYSTEM (ATS) FUNCTIONS UNDER THE ADJACENT CONDITIONS.	A. OPERATE NORMAL POWER			A	
	B. ALL GENERATORS OPERATE			A	
	C. GENERATORS 1 AND 2 OPERATE			A	
	D. GENERATORS 2 AND 3 OPERATE			A	
	E. GENERATORS 1 AND 3 OPERATE			R	2.
	F. RETURN TO NORMAL POWER AFTER EACH OF THE ABOVE TESTS				
	G. PARALLEL WITH UTILITY UPON RETURN TO NORMAL POWER (ITEMS B THROUGH E)				

SECTION D - ELECTRICAL TESTS

18. MEASUREMENT DESCRIPTION	VOLTAGE AND CURRENT MEASUREMENTS										
	VOLTAGE**						CURRENT**				
	A-N	B-N	C-N	A-B	B-C	C-A	A	B	C	N	G
Total at Output	277	277	275	480	480	478	600	600	600	1.5	0.5
	A-N	B-N	C-N	A-B	B-C	C-A	A	B	C	N	G

19. NOTES

1. CHECK FOR PROPER GROUNDING CONNECTIONS PRIOR TO ENERGIZING.
2. DOES NOT OPERATE WITH THIS SEQUENCE.

*CONDITION: A - ACCEPTABLE; R - NEEDS REPAIR, REPLACEMENT OR ADJUSTMENT; C - CORRECTED; NA - NOT APPLICABLE
**NOTE VALUE AND PHASING

DA FORM 7470-R, AUG 2002 USAPAV1.00

Figure 5-7. Sample of completed DA Form 7470-R

CHAPTER 6

UNINTERRUPTIBLE POWER SUPPLY SYSTEMS

6-1. Description of uninterruptible power supply (UPS) system

The following is a sample uninterruptible power supply (UPS) system with associated one-line and wiring diagrams for use as a guide for implementing the test procedures described in the preceding chapters of this manual.

a. Figure description. The uninterruptible power supply system consists of the following equipment: 480V utility feeder breaker, 480V generator feeder breaker, 480V transfer switch, 200 kVA redundant UPS, 125 Vdc NiCad battery and a 208/120V UPS switchboard panel. The 200 kVA UPS consists of the following equipment: 480V incoming breaker, 125 Vdc rectifier, redundant 120/208 VAC inverters, static switches, bypass switches and miscellaneous breakers. The equipment, accessories, interconnection, ratings, cabling, etc. are shown on figures 6-1 through 6-3. Figure 6-1 is the uninterruptible power system single line diagram on page 6-9. Figure 6-2 shown on page 6-10 is the uninterruptible power system block diagram and figure 6-3 shown on page 6-11 is the uninterruptible power system wiring diagram.

b. Switching. The utility and generator breakers are metal enclosed free standing, manually operated, air power circuit breakers. The breakers have instantaneous, short time, and long time trip settings with manual control and position indication on the door of the breaker compartment. The 480V transfer switch is metal enclosed, break before make, dead bus transfer, automatic on loss of voltage, solenoid operated, and mechanically held complete with microprocessor controls and indication, four pole switch. Transfer time and time delay settings are adjustable. The transfer switch will supply start and stop signals to the back-up diesel generator upon loss of and restoration of utility power. These controls are timed and must be coordinated with the diesel generator manufacturer for start-up, loading, and cool down times. Remote indication, control, alarm, etc. functions are also available.

c. UPS operation. The UPS is a static solid state system with a battery for back-up power. The rectifiers convert ac to dc power for supply to the redundant inverters and for charging the battery. The inverters receive power from either the rectifier or battery, and convert it from dc to ac. The inverters also include power conditioning equipment and circuits to remove harmonics developed in the system. Because the input power is converted from ac to dc to ac, power system disturbances are also removed from the UPS output. This makes UPSs ideal for use with sensitive electronic equipment and computers. The rectifiers and inverters are constructed with power diodes or silicon control rectifiers along with controls and filtering circuitry. The UPS also contains thermal magnetic molded case circuit breakers and two bumpless static switches. The switches will transfer the output of the UPS from one redundant inverter to the other upon failure of the lead inverter. The transfer between the inverters is accomplished with absolutely no loss of continuity of power to the load. In the sample system, as shown in figure 6-1, the two UPS modules are both sized to supply the entire load independent of one another. The 208/120 V switchboard is a metal enclosed, wall-mounted distribution panel with incoming and feeder unadjustable thermal magnetic molded case circuit breakers. The switchboard also receives a backup power supply from the utility power center for use during the maintenance of the UPS through two bypass switches.

d. Battery description. The nickel cadmium (NiCad) batteries are individual 1.2 volt cells in plastic or steel cases with nickel and cadmium plates in a potassium hydroxide solution. The cells are sealed, maintenance free and connected together in series on racks to supply 125 Vdc. The 120/208V UPS switchboard panel contains two main and numerous molded case thermal magnetic circuit breakers to distribute the power. The breakers have instantaneous and overcurrent elements trip characteristics. The

UPS systems provide normal and uninterruptible regulated power to sensitive emergency plant loads, like computers, communications, radar, security systems, lighting, etc.

6-2. Operation of uninterruptible power supply system

The operating modes for the UPS system are as follows:

a. Normal condition. Utility breaker closed, diesel generator not running but in auto mode, diesel generator breaker closed, transfer switch connected to utility, inverter A connected through UPS static switch to UPS bus and UPS switchboard connected to the UPS.

b. Loss of rectifier/battery charger A. UPS incoming breaker feeding rectifier/battery charger A opens, circuit breaker connecting rectifier/battery charger A to battery bus opens and battery fed by rectifier/battery charger B

c. Loss of inverter A. UPS static switch A switches UPS bus to inverter B and Inverter A circuit breaker opens.

d. Loss of utility power. Battery supplies power to UPS bus through inverter A or B, transfer switch supplies start signal to diesel generator, diesel generator starts and ramps up to speed and transfer switch connects to diesel generator.

e. Restoration of utility. Utility power restored, transfer switch switches to utility bus and diesel generator shut down by transfer switch.

6-3. Commissioning test plan for the UPS system

A system verification and functional performance test should be performed on the UPS system. These tests will include installation inspections, individual component testing, testing on wiring, control and interlock functional checks, equipment energization and system operating measurements and functional checks.

6-4. Installation inspections and component testing of the UPS system

As indicated in more detail in chapter 3, the installation of the main components (i.e. utility and generator circuit breakers, transfer switch, UPS, battery, battery charger, and UPS switchboard) will be inspected as follows:

a. Utility and generator circuit breakers. Completeness of assembly, verification of nameplate, sizes and settings against drawings, loose parts and insulation damage, breaker alignment and manual operation (leave circuit breaker open) and bus insulation resistance (if not previously energized). Figure 5-6 (DA Form 7469-R) shows a completed checklist for circuit breakers.

b. Transfer switch. Completeness of assembly, verification of nameplate, sizes and settings against drawings, loose parts and insulation damage, switch alignment and manual operation (leave open), switch insulation resistance (phase-to-phase and phase-to-ground), PT and control fuse size and continuity, ground connection and check timer settings. Figure 6-4 on page 6-12 shows a completed DA Form 7970-R for a transfer switch inspection.

c. UPS. Completeness of assembly, verification of nameplate, sizes and settings against drawings, loose parts and insulation damage, proper settings, control fuse size and continuity, ground connection,

proper neutral connection, proper phase and voltage connections (incoming, battery, inverter A, and inverter B) and manual operation of circuit breakers (leave open). Figure 6-5 shows a completed DA Form 7972-R for the UPS inspection.

d. NiCad battery. Completeness of assembly, verification of nameplate, sizes and connection against drawings, loose parts, leaks, or damage, electrolyte level, vents sealed and plugs installed, grounding and measure voltage. Figure 6-6 on page 6-14 shows a completed DA Form 7973-R for a battery inspection.

e. UPS switchboard. Completeness of assembly, verification of nameplate, sizes and settings against drawings, loose parts and insulation damage, ground connection, proper phase and voltage connections and manual operation of circuit breakers (leave open). Figure 6-7 shows a completed DA Form 7974-R for the switchboard inspection.

f. Cabling. Proper use, voltage, labeling, and connection using drawings, tightness and neatness of termination and power cable insulation resistance (phase-to-phase and phase-to-ground). See figure 4-11 (DA Form 7466-R) for sample of completed checklist.

g. Visual and electrical wiring inspections. The termination of each cable, shown on the cable block and wiring diagrams, should be checked to insure each conductor matches the wiring and schematic diagrams. This is performed by yellowing each connection from the schematic to the wiring diagram; visually inspecting each connection for cable number, wire number/color, and terminal; and checking point-to-point continuity or "ringing out" each wire from end to end including grounds. For example (figure 6-3) Cable BGATS1 from Automatic Transfer Switch to the Backup Generator should be checked to verify that the "black" wire is terminated as follows as shown on the schematic and wiring diagrams:

Equipment	Terminal No.
Automatic Transfer Switch	B1
Backup Generator	T1

As this is done, the wire on each drawing should be colored or highlighted to show its termination has been checked. This process should be completed for all field wiring as a minimum and internal wiring if not previously performed at the factory.

6-5. Energizing and test of the UPS system

The following steps are performed to energize and test the UPS system.

a. Initial energization. Individual components of the UPS system shall be sequentially energized from the source through the loads. As each item is energized, control functions, interlocks, and alarms should be checked for proper operation. Voltage, phasing, and current measurements should be made at each step.

b. Utility breaker. Verify diesel generator breaker open, verify incoming voltage, manually close the utility breaker, measure outgoing voltage and phasing of breaker, measure incoming voltage of transfer switch and note position of transfer switch and manually open breaker.

c. Diesel generator breaker. Verify utility breaker open, start diesel generator, verify diesel generator voltage, verify diesel generator and utility voltage have same magnitude and phasing, manually close diesel breaker, measure outgoing voltage and phasing, measure voltage at transfer switch and note position of transfer switch, manually open breaker and stop diesel generator and place in auto.

d. Transfer switch. Verify diesel generator stopped and in auto, verify utility bus energized, manually close utility breaker. Verify position of transfer switch and indication light status, measure input and output voltage of transfer switch, check phasing of utility bus to output of transfer switch. Manually open utility breaker. Diesel generator should start and switch should transfer to diesel generator. Note timing of diesel generator start and transfer from opening of utility breaker. Manually close utility breaker. Switch should transfer to utility and diesel generator should stop. Note timing of transfer and diesel generator stop from closing of utility breaker. Push test switch to simulate normal source failure. Verify diesel generator starts and transfer switch switches to diesel generator, return switch to utility feed and verify diesel generator stops.

e. UPS (rectifier/ battery charger/battery). Verify UPS incoming breaker open. Verify utility feed closed through to input of UPS and measure voltage and phasing. Verify rectifier/battery charger output A breaker open. Verify rectifier/battery charger output B breaker open. Verify battery breaker A open and measure battery voltage and polarity. Verify battery breaker B open and measure battery voltage and polarity. Verify inverter A and inverter B incoming breakers open. Close UPS incoming breaker A and measure rectifier/battery charger A output voltage, check dc output meter. Press battery "pre charge" button, if available, and close rectifier/battery charger A output breaker and close battery breaker A. Measure battery charger voltage. Allow unit to run until battery fully charged or for a minimum of 24 hours. Record time. Measure rectifier/battery charger A output current and read meter every 4 hours. Open UPS incoming breaker A. Operate UPS from battery until minimum voltage recorded (1 to 4 hours). Open battery breaker A. Close UPS incoming breaker B and measure rectifier/battery charger B output voltage, check dc output meter. Press battery "pre charge" button, if available, and close rectifier/battery charger B output breaker and close battery breaker B. Measure battery charger voltage. Allow unit to run until battery fully charged or for a minimum of 24 hours. Record time. Measure rectifier/battery charger B output current and read meter every 4 hours.

f. UPS (inverter/static switch). Verify UPS operational through rectifier/battery charger and battery.

(1) Verify UPS normal condition operation.

(a) Verify battery charged and on float.

(b) Measure float voltage

(c) Verify inverter A and inverter B breakers open.

(d) Verify static switch switched to inverter A.

(e) Close inverter A and B input breakers.

(f) Measure inverter A and inverter B output voltage and read meters.

(g) Verify inverter A and inverter B outputs in phase.

(h) Verify static switch in inverter A position.

(2) Verify proper operation of static switches.

(a) Open inverter A incoming breaker.

(b) Verify static switch switches to inverter B.

(c) Measure voltage and ensure bumpless.

(d) Close inverter A incoming breaker and verify static switch switches to A.

(e) Measure voltage and ensure bumpless.

(f) Open inverter B incoming breaker and verify static switch stays connected to inverter A.

(g) Measure voltage and ensure bumpless.

(3) Verify low voltage trip.

(a) Open rectifier/battery charger output breakers.

(b) Open battery breakers.

(c) Verify inverter A and B trip on low voltage.

(d) Close rectifier battery charger B output breaker and battery breakers.

(e) Close inverter A and B input breakers.

(f) Open UPS incoming breakers.

(g) verify inverter A and B output (feed from battery).

(h) Measure voltage and current.

(i) Close rectifier battery charger A output breaker and battery breakers.

(j) Open UPS incoming breaker.

(k) Verify inverter A and B output present (feed from battery).

(l) Measure voltage and current.

g. Loading UPS. Close incoming breaker to UPS bus. Verify UPS is energized through static switch. Verify all UPS loads connected properly and ready to start Close load breaker on UPS bus sequentially. Measure voltage and read UPS meters at each step. Add load until UPS loads equal normal design load. Run for 4 hours and check for overheating.

h. Utility trip test. Verify UPS loaded and connected to utility. Manually open utility breaker. Verify battery picks up load. Read current. Verify diesel generator starts, transfer switch transfers to diesel generator, diesel generator picks up load, and battery returns to float mode. Measure voltage and current at UPS and ensure bumpless transfer. Close utility breaker. Verify transfer switch transfers to utility, battery picks up load during transfer, diesel generator stops, and battery returns to float after utility picks up load. Measure voltage and current at UPS bus and ensure bumpless transfer.

i. Inverter A to inverter B loaded transfer test. Verify UPS loaded and connected to utility. Open inverter A incoming breaker. Verify static switch switches to inverter B. Measure voltage and current at

UPS bus and ensure bumpless transfer. Close inverter A incoming breaker. Verify that static switch switches to inverter A. Measure voltage and current at UPS bus and ensure bumpless transfer.

j. Battery discharge test. Verify UPS loaded and connected to utility. Notify plant of pending UPS trip. Open diesel generator breaker and block auto and manual start. Open utility breaker. Verify battery picks up load. Measure battery voltage and current. Measure UPS voltage and current and ensure bumpless transfer. Operate UPS from battery until battery minimum voltage reached (1 to 4 hours). Record voltage. Verify inverter A and B trip when batteries reach minimum voltage. Notify plant of pending UPS re-energization. Reclose utility breaker. Close diesel generator breaker and return to auto start mode. Verify battery on float and charging, measure current. Verify when battery fully charged and record time to charge.

k. Checklists. The inspection is considered complete when the UPS System Inspection and Test (see figure 6-8 on page 6-16 for completed sample of DA Form 7475-R) is satisfactorily completed.

6-6. Possible failures and corrective actions

Table 6-1 lists general problems that may arise during the testing of the equipment and systems along with possible troubleshooting techniques. For all problems, consult the equipment and component manuals for troubleshooting directions, check fuses/lights/breakers/etc. for continuity, check equipment calibration and settings, and look for faulty equipment or connections.

Table 6-1. Possible failures and corrective actions of the UPS system

Utility and Generator Circuit Breaker Problem	**Areas to Check**
Breakers will not close/trip	Mechanical alignment/ interlocks Relay and protective device settings and operation Mis-wired circuits
Breaker trips inadvertently	Ground on cable or system Relay and protective device settings and operation System overload Mis-wired circuits

Transfer Switch	**Areas to Check**
Switch will not transfer	Solenoid operating mechanism Time delay settings Control panel Mis-wired circuits
UPS-Rectifier/ Battery Charger	**Areas to Check**
No output voltage/ current	Input voltage/ breaker Rectifier (SCR) and rectifier fuse Input transformer Control board
Low output voltage	Dead input phase Rectifier (SCR) and rectifier fuse Voltage control settings or potential Control board

Table 6-1. Possible failures and corrective actions of the UPS system (continued)

High output voltage	Input voltage high Voltage control settings or potential Control board
Output voltage not adjustable	Voltage control potential Control board
High output current	System overload/ short Current limit setting Control board
Low output current	Current limit setting Control board

UPS- Battery	**Areas to Check**
Low battery voltage/ current/ capacity	Battery and cell connections Electrolyte level Cell voltage Cell condition, cleanliness, and age Float voltage/ current Battery room temperature Battery design versus actual load Battery/ system ground
Breaker trip	Battery / system short System overload

UPS- Inverters/ Static Switch	**Areas to Check**
No output voltage/ current	Input voltage/ breaker SCR or diode static switch constant voltage transformer control boards
Low output voltage	Input voltage System overload System frequency Control board

UPS- Inverters/ Static Switch	**Areas to Check**
High/Low output frequency	Input voltage Alternate source Frequency control setting Control board
No transfer from Inverter A to Inverter B	Primary/alternate source Static switch Synchronizing circuit Control board

UPS System	**Areas to Check**
No output voltage/ current	Incoming voltage Circuit breakers System components

Table 6-1. Possible failures and corrective actions (continued)

No transfer to Diesel generator	Diesel generator equipment/ breaker Transfer switch
Low/high output voltage/ current	Incoming voltage System components Battery sizing/ capacity System sizing/ capacity
Transfers not bumpless	Battery connection Static switch Control board
Inadequate UPS capacity	UPS sizing/ capacity Battery sizing/ capacity

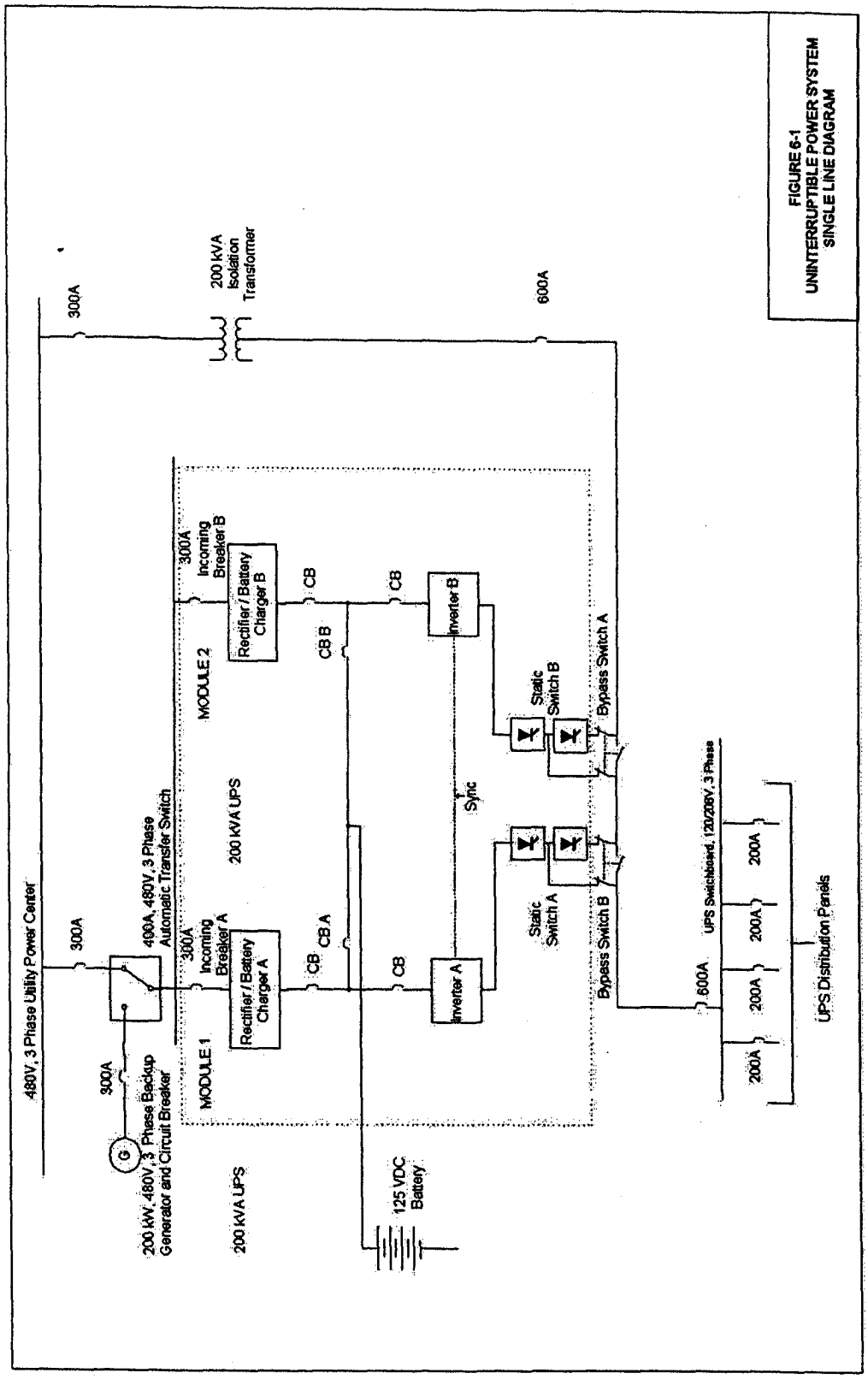

Figure 6-1. Uninterruptible power supply system single line diagram

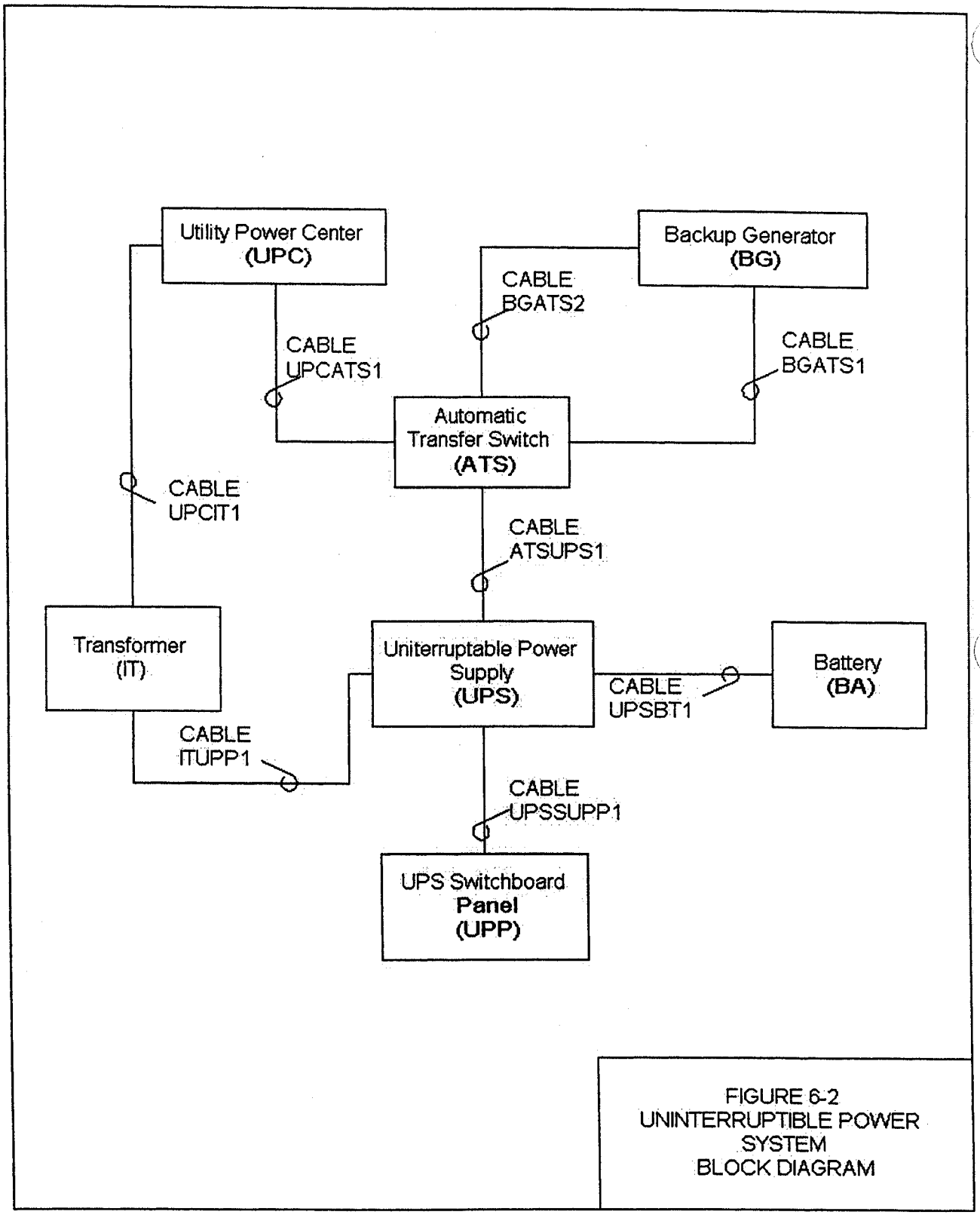

Figure 6-2. Uninterruptible power supply system block diagram

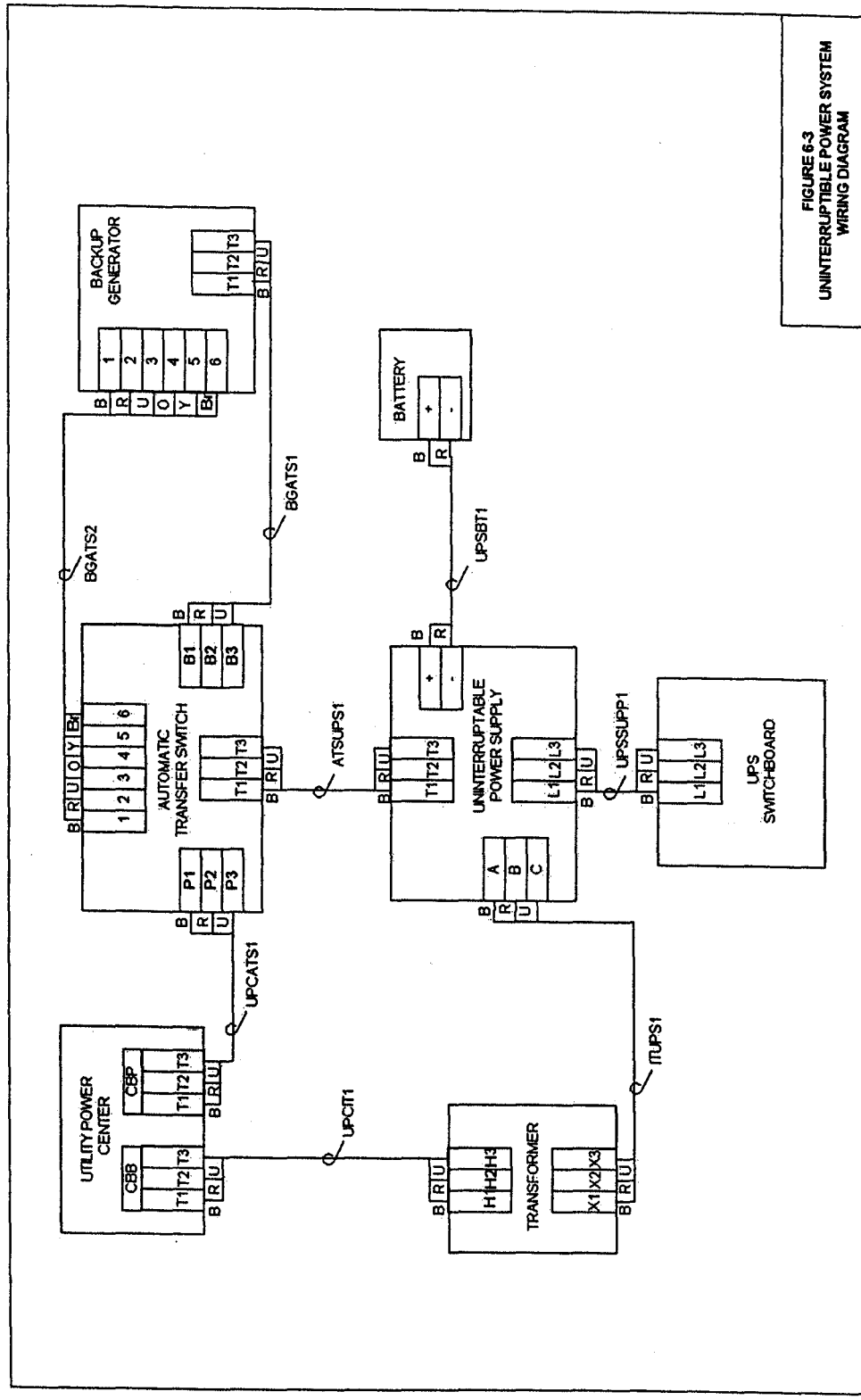

Figure 6-3. Uninterruptible power supply system wiring diagram

TRANSFER SWITCH INSPECTION CHECKLIST

For use of this form see TM 5-694; the proponent agency is COE.

SECTION A - CUSTOMER DATA

1. PLANT/BUILDING Bldg 1928	2. LOCATION Fort Tank	3. JOB NUMBER 02-125
4. EQUIPMENT Switch	5. CIRCUIT DESIGNATION F1	6. DATE *(YYYYMMDD)* 20020823
7. TEST EQUIPMENT AND CALIBRATION DATE Biddle/ 14 May 2002		8. TESTED BY John Smith

SECTION B - EQUIPMENT DATA

9. MANUFACTURER Russell Electric	10. STYLES/S.O.	11. VOLTAGE RATING 600V	12. CURRENT RATING 1200A
13. SWITCH RATING 4 Pole		14. ENCLOSURE TYPE	15. FREQUENCY 60hz

16. **SECTION C - VISUAL AND ELECTRICAL/MECHANICAL INSPECTION**

CHECK POINT	COND*	NOTES	CHECK POINT	COND*	NOTES
EXTERIOR OF EQUIPMENT	A		EQUIPMENT IDENTIFICATION	A	
COMPLETENESS OF ASSEMBLY	A		BRACING	A	
INDICATING LIGHTS	A		PROPER PHASE CONNECTIONS AND COLOR CODE	A	
SWITCH FOR FREEDOM OF MOVEMENT	A		ENVIRONMENTAL CLASSIFICATION	A	
ELECTRICAL/MECHANICAL INTERLOCKS	A		WORKING CLEARANCE	A	
ADJUST TIMING SETTINGS	A		ANCHORAGE	A	
PROPER EQUIPMENT GROUNDING	A		REFERENCE DRAWINGS	A	
CONTACT RESISTANCE	A		PROPER LUBRICATION	A	
TIGHTNESS OF BOLTED CONNECTIONS	A		PT AND CONTROL FUSE SIZE	A	

SECTION D - ELECTRICAL TESTS

17. INSULATION RESISTANCE @ V	A-GRD	B-GRD	C-GRD	A-B	B-C	C-A

18. NOTES

1. SWITCH TRANSFERS ON LOSS OF NORMAL POWER AT SPECIFIED TIME DELAY.
2. SWITCH TRANSFER BACK TO NORMAL POWER ON RETURN OF NORMAL POWER SERVICE AT SPECIFIED TIME DELAY.
3. AUXILIARY CONTACTS OPERATE CORRECTLY DURING NORMAL AND ABNORMAL POWER CONDITIONS.

*CONDITION: A - ACCEPTABLE; R - NEEDS REPAIR, REPLACEMENT OR ADJUSTMENT; C - CORRECTED; NA - NOT APPLICABLE

DA FORM 7471-R, AUG 2002 USAPAV1.00

Figure 6-4. Sample of completed DA Form 7471-R

UNINTERRUPTIBLE POWER SUPPLY (UPS) INSPECTION CHECKLIST

For use of this form see TM 5-694; the proponent agency is COE.

SECTION A - CUSTOMER DATA

1. PLANT/BUILDING	2. LOCATION		3. JOB NUMBER
Bldg 358	Fort Tank		02-126
4. EQUIPMENT	5. CIRCUIT DESIGNATION FED TO	6. CIRCUIT DESIGNATION FED FROM	7. DATE (YYYYMMDD)
UPS	Main	Main	20020823
8. TEST EQUIPMENT AND CALIBRATION DATE			9. TESTED BY
Fluke 45/ 7 Aug 2002			John Smith

SECTION B - EQUIPMENT DATA

10. MANUFACTURER	11. STYLES/S.O.	12. VOLTAGE RATING	13. kVA RATING
Liebert		600V	130 kVA

SECTION C - VISUAL AND ELECTRICAL/MECHANICAL INSPECTION

14. CHECK POINT	COND*	NOTES	CHECK POINT	COND*	NOTES
EXTERIOR OF EQUIPMENT	A		EQUIPMENT IDENTIFICATION	A	
COMPLETENESS OF ASSEMBLY	A		BRACING	A	
INDICATING LIGHTS	A		PROPER PHASE CONNECTIONS AND COLOR CODE	A	
SWITCH FOR FREEDOM OF MOVEMENT	A		ENVIRONMENTAL CLASSIFICATION	A	
MANUAL OPERATION OF CIRCUIT BREAKERS	A		WORKING CLEARANCE	A	
TIMING SETTINGS	A		ANCHORAGE	A	
PROPER GROUNDING	A		REFERENCE DRAWINGS	A	
PROPER VOLTAGE CONNECTIONS	A		CONTROL FUSE SIZE AND CONTINUITY	A	
TIGHTNESS OF BOLTED CONNECTIONS	A		VERIFY ALL TRANSFER SWITCH OPERATIONS	A	
TEST CIRCUIT BREAKERS WITH CURRENT INJECTION TESTER	A				

SECTION D - ELECTRICAL TESTS

15. VAC (OUTPUT)	A-GRD	B-GRD	C-GRD	A-B	B-C	C-A

16. NOTES

1. VERIFY SYSTEM GROUND (AT ONE POINT ONLY).

*CONDITION: A = ACCEPTABLE; R = NEEDS REPAIR, REPLACEMENT OR ADJUSTMENT; C = CORRECTED; NA = NOT APPLICABLE

DA FORM 7472-R, AUG 2002 USAPAV1.00

Figure 6-5. Sample of completed DA Form 7472-R

BATTERY INSPECTION CHECKLIST

For use of this form see TM 5-694; the proponent agency is COE.

SECTION A - CUSTOMER DATA

1. PLANT/BUILDING Bldg 358	2. LOCATION Fort Tank	3. JOB NUMBER 02-133
4. EQUIPMENT BAT-1	5. CIRCUIT DESIGNATION CKT-2	6. DATE *(YYYYMMDD)* 20020823
7. TEST EQUIPMENT AND CALIBRATION DATE Fluke 87, Hydrometer, Thermometer, Load bank		8. TESTED BY John Smith

SECTION B - EQUIPMENT DATA

9. MANUFACTURER FIAMM	10. STYLES/S.O. SD 5	11. VOLTAGE RATING 3 Volts per cell	12. CURRENT RATING
13. ENCLOSURE TYPE Wet Cell	14. FREQUENCY 60 hz	15. WET BULB TEMPERATURE 65 F	16. DRY BULB TEMPERATURE 85 F

SECTION C - VISUAL AND ELECTRICAL/MECHANICAL INSPECTION

17. CHECK POINT	COND*	NOTES	CHECK POINT	COND*	NOTES
EXTERIOR OF EQUIPMENT	A		EQUIPMENT IDENTIFICATION	A	
COMPLETENESS OF ASSEMBLY	A		BRACING	A	
ELECTROLYTE LEVEL	A		ENVIRONMENTAL CLASSIFICATION	A	
VENTS SEALED AND PLUGS INSTALLED	A		WORKING CLEARANCE	A	
PROPER POLARITY CONNECTIONS	A		ANCHORAGE	A	
TIGHTNESS OF BOLTED CONNECTIONS	A		CHECK FOR EXHAUST FAN IF IN ENCLOSED ENVIRONMENT	A	
PROPER GROUNDING	A		REFERENCE DRAWINGS	A	
CHECK FOR SHOWER AND EYEWASH STATION	A		CHECK FOR ACCESS TO BATTERIES FOR O & M	A	
TEST CIRCUIT BREAKERS WITH CURRENT INJECTION TESTER	A		CHECK UPS CONTROL PANEL ALARMS	A	
TEST CIRCUIT BREAKERS	A		TEST TRANSFER SWITCH	A	

SECTION D - ELECTRICAL TESTS

18. MEASUREMENT DESCRIPTION	VOLTAGE AND CURRENT MEASUREMENTS				
	VOLTAGE**		CURRENT**		
	POSITIVE	NEGATIVE	POSITIVE	NEGATIVE	GROUND
BATTERY VOLTAGE & CURRENT					

19. NOTES

1. MEASURE RESISTANCE BETWEEN CELL CONNECTIONS.
2. MEASURE VOLTAGE ACROSS EACH CELL.
3. CHECK SPECIFIC GRAVITY OF EACH CELL.
4. TEST AND MAINTAIN BATTERY (CELLS) IN ACCORDANCE WITH MANUFACTURERS RECOMMENDATIONS.

*CONDITION: A - ACCEPTABLE; R - NEEDS REPAIR, REPLACEMENT OR ADJUSTMENT; C - CORRECTED; NA - NOT APPLICABLE
**NOTE VALUE AND PHASING

DA FORM 7473-R, AUG 2002 USAPAV1.00

Figure 6-6. Sample of completed DA Form 7473-R

UNINTERRUPTIBLE POWER SUPPLY (UPS) SWITCHBOARD INSPECTION CHECKLIST

For use of this form see TM 5-694; the proponent agency is COE.

SECTION A - CUSTOMER DATA

1. PLANT/BUILDING Bldg 1930	2. LOCATION Fort Tank	3. JOB NUMBER 02-128
4. EQUIPMENT Switchboard	5. CIRCUIT DESIGNATION Main	6. DATE *(YYYYMMDD)* 20020823
7. TEST EQUIPMENT TYPE/BRAND AND CALIBRATION DATE Biddle		8. TESTED BY John Smith

SECTION B - EQUIPMENT DATA

9. MANUFACTURER Siemens	10. STYLES/S.O.	11. VOLTAGE RATING 600V	12. CURRENT RATING 2000A
13. BUS RATING/CB INTERRUPTING RATING 2000A/ 50kA			

SECTION C - VISUAL AND ELECTRICAL/MECHANICAL INSPECTION

14. CHECK POINT	COND*	NOTES	CHECK POINT	COND*	NOTES
EXTERIOR OF EQUIPMENT	A		BRACING	A	
COMPLETENESS OF ASSEMBLY	A		PROPER PHASE CONNECTION AND COLOR CODE	A	
INDICATING LIGHTS	A		ENVIRONMENTAL CLASSIFICATION	A	
MANUAL OPERATION OF CIRCUIT BREAKERS	A		WORKING CLEARANCE	A	
PROPER GROUNDING	A		ANCHORAGE	A	
CONDITION OF INSULATION	A		REFERENCE DRAWINGS	A	
PROPER VOLTAGE CONNECTIONS	A		VERIFY PROPER SIZES OF BREAKERS AND FUSES	A	
TIGHTNESS OF BOLTED CONNECTIONS	A		CHECK PROPER EQUIPMENT GROUNDING TO GROUNDING BUS	A	
EQUIPMENT IDENTIFICATION	A				

SECTION D - ELECTRICAL TESTS

15. BUS INSULATION RESISTANCE @ 1000 v	A-GRD	B-GRD	C-GRD	A-B	B-C	C-A
	10 megohm	12 megohm	12 megohm			

16. NOTES

1. TEST ALL CIRCUIT BREAKERS ACCORDING TO MANUFACTURER'S RECOMMENDATIONS.

*CONDITION: A - ACCEPTABLE; R - NEEDS REPAIR, REPLACEMENT OR ADJUSTMENT; C - CORRECTED; NA - NOT APPLICABLE

DA FORM 7474-R, AUG 2002 USAPAV1.00

Figure 6-7. sample of completed DA Form 7474-R

UNINTERRUPTIBLE POWER SUPPLY (UPS) SYSTEM INSPECTION CHECKLIST

For use of this form see TM 5-694; the proponent agency is COE.

SECTION A - CUSTOMER DATA

1. PLANT/BUILDING Bldg 316	2. LOCATION Fort Tank	3. JOB NUMBER 02-129
4. EQUIPMENT UPS System	5. CIRCUIT DESIGNATION Critical	6. DATE *(YYYYMMDD)* 20020824
7. TEST EQUIPMENT NA		8. TESTED BY John Smith

SECTION B - VISUAL AND ELECTRICAL/MECHANICAL INSPECTION

9. CHECK POINT	COND*	NOTES	CHECK POINT	COND*	NOTES
COMPONENT INSPECTION/TESTING	A		ENERGIZE AND TEST SYSTEM	A	
INSTALLATION INSPECTION/TESTING	A		UTILITY TRIP TEST	A	
WIRING VISUAL VERIFICATION	A		LOADED TRANSFER TEST (NORMAL, EMERGENCY & RETURN)	A	
GENERATOR CONTROL FUNCTIONS	A		TIGHTNESS OF BOLTED CONNECTIONS	A	
LOADING UPS TEST	A		BATTERY DISCHARGE TEST	A	
DISCONNECT RECTIFIERS & INVERTERS SEPARATELY. DOES SYSTEM OPERATE CORRECTLY?	A		TEST ALL UPS DIAGNOSTIC FAULT INDICATORS	A	

SECTION D - ELECTRICAL TESTS

10.	A-N	B-N	C-N	A-B	B-C	C-A	A	B	C	N	G
UPS INPUT	277	277	277	465	465	465	100	150	100		4
	A-N	B-N	C-N	A-B	B-C	C-A	A	B	C	N	G
UPS OUTPUT	277	277	277	480	465	465	100	150	100	20	4
	A-N	B-N	C-N	A-B	B-C	C-A	A	B	C	N	G
UPS SWITCHBOARD HARMONIC (THD)	3%	3%	4%				38%	42%	40%		

11. NOTES

*CONDITION: A - ACCEPTABLE; R - NEEDS REPAIR, REPLACEMENT OR ADJUSTMENT; C - CORRECTED; NA - NOT APPLICABLE
**NOTE VALUE AND PHASING

DA FORM 7475-R, AUG 2002 USAPAV1.00

Figure 6-8. Sample of completed DA Form 7475-R

The proponent agency of this publication is the Chief of Engineers, United States Army. Users are invited to send comments and suggested improvements on DA Form 2028 (Recommended Changes to Publications and Blank Forms) directly to HQUSACE, (ATTN: CEMP-SP), Washington, DC 20314-1000.

By Order of the Secretary of the Army:

ERIC K. SHINSEKI
General, United States Army
Chief of Staff

Official:

JOEL B. HUDSON
Administrative Assistant to the Secretary of the Army

Distribution:

To be distributed in accordance with Initial Distribution Number (IDN) 344745, requirements for non-equipment TM 5-694.

CIRCUIT SWITCHER INSPECTION CHECKLIST

For use of this form see TM 5-694; the proponent agency is COE.

SECTION A - CUSTOMER DATA

PLANT/BUILDING	2. LOCATION	3. JOB NUMBER
4. EQUIPMENT	5. CIRCUIT DESIGNATION	6. DATE *(YYYYMMDD)*
7. TEST EQUIPMENT TYPE/BRAND AND CALIBRATION DATE		8. TESTED BY

SECTION B - EQUIPMENT DATA

9. MANUFACTURER	10. STYLES/S.O.	11. VOLTAGE RATING	12. CURRENT RATING
13. INTERRUPTING RATING		14. BUS BRACING	

SECTION C - VISUAL AND ELECTRICAL/MECHANICAL INSPECTION

15. CHECK POINT	COND*	NOTES	CHECK POINT	COND*	NOTES
EXTERIOR OF EQUIPMENT			EQUIPMENT IDENTIFICATION		
COMPLETENESS OF ASSEMBLY			BRACING		
ELECTRICAL/MECHANICAL INTERLOCKS			PROPER PHASE CONNECTION AND COLOR CODE		
PROPER GROUNDING			HAZARDOUS LOCATION		
ALIGNMENT AND ROTATION LIMITS			CONTACT RESISTANCE		
TIGHTNESS OF BOLTED CONNECTIONS			ANCHORAGE		
PROPER LUBRICATION			REFERENCE DRAWINGS		
INTERRUPTER TIME TRAVEL			CONTROL CIRCUIT OPERATION		
MANUAL OPERATION			ENERGIZED OPERATION		

SECTION D - ELECTRICAL TESTS

16. INSULATION RESISTANCE @ V	A-GRD	B-GRD	C-GRD	A-B	B-C	C-A

17. MEASUREMENT DESCRIPTION	VOLTAGE AND CURRENT MEASUREMENTS										
	VOLTAGE**						CURRENT**				
	A-N	B-N	C-N	A-B	B-C	C-A	A	B	C	N	G
	A-N	B-N	C-N	A-B	B-C	C-A	A	B	C	N	G
	A-N	B-N	C-N	A-B	B-C	C-A	A	B	C	N	G

18. NOTES:

*CONDITION: A=ACCEPTABLE; R=NEEDS REPAIR, REPLACEMENT OR ADJUSTMENT; C=CORRECTED; NA=NOT APPLICABLE
**NOTE VALUE AND PHASING

TRANSFORMER INSPECTION CHECKLIST

For use of this form see TM 5-694; the proponent agency is COE.

SECTION A - CUSTOMER DATA

PLANT/BUILDING	2. LOCATION	3. JOB NUMBER
4. EQUIPMENT	5. CIRCUIT DESIGNATION	6. DATE *(YYYYMMDD)*
7. TEST EQUIPMENT TYPE/BRAND AND CALIBRATION DATE		8. TESTED BY

SECTION B - EQUIPMENT DATA

9. MANUFACTURER	10. STYLES/S.O.	11. VOLTAGE RATING	12. CURRENT RATING
13. WET BULB TEMPERATURE	14. DRY BULB TEMPERATURE	15. ENCLOSURE TYPE	16. FREQUENCY

SECTION C - VISUAL AND ELECTRICAL/MECHANICAL INSPECTION

17. CHECK POINT	COND*	NOTES	CHECK POINT	COND*	NOTES
EXTERIOR OF EQUIPMENT			PROPER PHASE CONNECTION AND COLOR CODE		
COMPLETENESS OF ASSEMBLY			HAZARDOUS LOCATION		
PROPER GROUNDING			WORKING CLEARANCE		
CONDITION OF INSULATION			ANCHORAGE		
TIGHTNESS OF BOLTED CONNECTIONS			REFERENCE DRAWINGS		
SEALS AND OIL LEVELS			TURNS RATIO MEASUREMENTS		
WINDING CONFIGURATION			AUXILIARY DEVICE OPERATION		

SECTION D - ELECTRICAL TESTS

18. INSULATION RESISTANCE	A-GRD	B-GRD	C-GRD	A-B	B-C	C-A
@ V						
POLARIZATION INDEX						
TURNS RATIO TEST						
POWER FACTOR						
PROPER VOLTAGE						

19. NOTES:

1. PERFORM GROUND RESISTANCE TESTS PRIOR TO ENERGIZING EQUIPMENT.

2. GROUND RESISTANCE TESTS MUST BE PERFORMED IN DRY CONDITIONS AND SHALL BE PERFORMED 48 HOURS AFTER RAINFALL.

*CONDITION: A=ACCEPTABLE; R=NEEDS REPAIR, REPLACEMENT OR ADJUSTMENT; C=CORRECTED; NA=NOT APPLICABLE

SWITCHGEAR INSPECTION CHECKLIST

For use of this form see TM 5-694; the proponent agency is COE.

SECTION A - CUSTOMER DATA

PLANT/BUILDING	2. LOCATION	3. JOB NUMBER

4. CIRCUIT DESIGNATION	5. CIRCUIT FED FROM	6. CIRCUIT FED TO	7. DATE *(YYYYMMDD)*

8. TEST EQUIPMENT TYPE/BRAND AND CALIBRATION DATE	9. ENCLOSURE TYPE	10. TESTED BY

SECTION B - EQUIPMENT DATA

11. MANUFACTURER	12. STYLES/S.O.	13. VOLTAGE RATING	14. CURRENT RATING

15. INTERRUPTING RATING	16. BUS BRACING

SECTION C - VISUAL AND ELECTRICAL/MECHANICAL INSPECTION

17. CHECK POINT	COND*	NOTES	CHECK POINT	COND*	NOTES
EXTERIOR OF EQUIPMENT			EQUIPMENT IDENTIFICATION		
REFERENCE DRAWINGS			BRACING		
ELECTRICAL/MECHANICAL DRAWOUT MECHANISM AND INTERLOCKS			PROPER PHASE CONNECTION AND COLOR CODE		
BUS AND SUPPORT INSULATORS			HAZARDOUS LOCATION		
PROPER LUBRICATION			WORKING CLEARANCE		
CLEAN SWITCHGEAR			ANCHORAGE		
CHECK MANUAL OPERATION OF CIRCUIT BREAKERS AND RELAYS			ALL FILTERS AND VENTS CLEAR		
TEST RELAYS (ACCORDING TO ELEC. STUDY RECOMMENDATIONS)			CHECK PROPER EQUIPMENT GROUNDING TO GROUNDING BUS		
CHECK INSTRUMENT AND RELAY COVERS			SWITCHES FOR FREEDOM OF MOVEMENT		
CHECK CIRCUIT BREAKER INSULATING PARTS			CHECK INCOMING LINE CONNECTIONS TO MAIN BUS		
CHECK CIRCUIT BREAKER CONTACT SURFACES			VERIFY PROPER SIZE BREAKERS/FUSES		

18. VERIFY LIFT OR BUILT WINCH FOR HANDLING HEAVY PARTS	19. VERIFY CORRECT OPERATION OF INDICATING LIGHTS, METERS, GAUGES, ETC.
20. VERIFY BOLTED BUS CONNECTIONS TO MANUFACTURER RECOMMENDATIONS	21. VERIFY SPACE HEATER IS PROVIDED AND OPERATIONAL

SECTION D - ELECTRICAL TESTS

22. INSULATION RESISTANCE @ V	A-GRD	B-GRD	C-GRD	A-B	B-C	C-A

23. MEASUREMENT DESCRIPTION	VOLTAGE AND CURRENT MEASUREMENTS										
	VOLTAGE**						CURRENT**				
	A-N	B-N	C-N	A-B	B-C	C-A	A	B	C	N	G
	A-N	B-N	C-N	A-B	B-C	C-A	A	B	C	N	G
	A-N	B-N	C-N	A-B	B-C	C-A	A	B	C	N	G

24. NOTES

1. VOLTAGE MEASUREMENTS TO BE MADE AFTER UTILITY SOURCE IS CONNECTED TO INCOMING BREAKER WITH THE UTILITY BREAKER OPEN.
2. INSULATION RESISTANCE TESTS MUST BE PERFORMED PRIOR TO ENERGIZING EQUIPMENT.

*CONDITION: A=ACCEPTABLE; R=NEEDS REPAIR, REPLACEMENT OR ADJUSTMENT; C=CORRECTED; NA=NOT APPLICABLE
**NOTE VALUE AND PHASING

POWER CABLE INSPECTION CHECKLIST

For use of this form see TM 5-694; the proponent agency is COE.

SECTION A - CUSTOMER DATA

1. PLANT/BUILDING	2. LOCATION	3. JOB NUMBER
4. EQUIPMENT	5. CIRCUIT DESIGNATION	6. DATE *(YYYYMMDD)*
7. TEST EQUIPMENT TYPE/BRAND AND CALIBRATION DATE		8. TESTED BY

SECTION B - EQUIPMENT DATA

9. MANUFACTURER	10. STYLES/S.O.	11. VOLTAGE RATING	12. CURRENT RATING
13. WET BULB TEMPERATURE	14. DRY BULB TEMPERATURE	15. ENCLOSURE TYPE	16. FREQUENCY

SECTION C - VISUAL AND ELECTRICAL/MECHANICAL INSPECTION

17. CHECK POINT	COND*	NOTES	CHECK POINT	COND*	NOTES
EXTERIOR OF CABLE RUN			BRACING AND SUPPORTS		
PROPER GROUNDING AT TERMINAL LUGS TO BUS			CHECK PROPER SIZE OF CABLE		
REFERENCE EXISTING 1-LINE DIAGRAMS			TIGHTNESS AND NEATNESS OF TERMINATIONS		
PROPER LUBRICATION			ANCHORAGE		
CHECK GROUNDING AT SPLICE JOINTS			CHECK PROPER SIZE TERMINAL LUGS AND MATERIAL		
CHECK CABLE PHASE COLOR CODE			CHECK CABLE PHASE COORDINATION		
SHIELD CONTINUITY			CABLE IDENTIFICATION		

SECTION D - ELECTRICAL TESTS

18. INSULATION RESISTANCE	A-GRD	B-GRD	C-GRD	A-B	B-C	C-A
APPLIED VOLTAGE						

19. NOTES

1. PERFORM HIGH POTENTIAL TESTS IN ACCORDANCE WITH SPECIFIED REQUIREMENTS OR MANUFACTURER(S) RECOMMENDATIONS.

*CONDITION: A=ACCEPTABLE; R=NEEDS REPAIR, REPLACEMENT OR ADJUSTMENT; C=CORRECTED; NA=NOT APPLICABLE

MAIN POWER ENERGIZATION CHECKLIST

For use of this form see TM 5-694; the proponent agency is COE.

SECTION A - CUSTOMER DATA

1. PLANT/BUILDING	2. LOCATION	3. JOB NUMBER

4. CIRCUIT DESIGNATION	5. CIRCUIT FED FROM	6. CIRCUIT FED TO	7. DATE *(YYYYMMDD)*

8. TEST EQUIPMENT TYPE/BRAND AND CALIBRATION DATE	9. TESTED BY

SECTION B - VISUAL AND ELECTRICAL/MECHANICAL INSPECTION

10. CHECK POINT	COND*	NOTES	CHECK POINT	COND*	NOTES
COMPONENT INSPECTION/TESTING COMPLETED			VERIFY SWITCHGEAR CONTROL FUNCTIONS		
WIRING VISUAL VERIFICATION			CHECK FOR WORKING CLEARANCE		
VERIFY WIRING DIAGRAMS			ENERGIZE AND TEST SYSTEM		
VERIFY CIRCUIT SWITCHER CONTROL FUNCTIONS			TRANSFORMER TRANSFER CONTROL FUNCTIONS		
ENERGIZE AND TEST SYSTEM FOR ALL CONDITIONS			CHECK FOR UNUSUAL SOUNDS AFTER ENERGIZING		
CHECK BUSHING OR TERMINALS			CHECK ANCHORING OF TRANSFORMER SWITCHGEAR AND SWITCHES ENCLOSURE		
CHECK FOR REMOVAL OF PAINT OR HEAVY DENTS			CHECK FOR NORMAL/ABNORMAL SWITCHING OPERATION		

SECTION C - ELECTRICAL TESTS

11. MEASUREMENT DESCRIPTION	VOLTAGE AND CURRENT MEASUREMENTS										
	VOLTAGE**						CURRENT**				
	A-N	B-N	C-N	A-B	B-C	C-A	A	B	C	N	G
	A-N	B-N	C-N	A-B	B-C	C-A	A	B	C	N	G
	A-N	B-N	C-N	A-B	B-C	C-A	A	B	C	N	G
	A-N	B-N	C-N	A-B	B-C	C-A	A	B	C	N	G
	A-N	B-N	C-N	A-B	B-C	C-A	A	B	C	N	G

12. NOTES

*CONDITION: A=ACCEPTABLE; R=NEEDS REPAIR, REPLACEMENT OR ADJUSTMENT; C=CORRECTED; NA=NOT APPLICABLE
**NOTE VALUE AND PHASING

ENGINE GENERATOR SET INSPECTION CHECKLIST

For use of this form see TM 5-694; the proponent agency is COE.

SECTION A - CUSTOMER DATA

1. PLANT/BUILDING	2. LOCATION	3. JOB NUMBER
4. EQUIPMENT	5. CIRCUIT DESIGNATION	6. DATE *(YYYYMMDD)*
7. TEST EQUIPMENT TYPE/BRAND AND CALIBRATION DATE		8. TESTED BY

SECTION B - EQUIPMENT DATA

9. MANUFACTURER	10. STYLES/S.O.	11. VOLTAGE RATING	12. kW RATING
13. CIRCUIT BREAKER SIZE/INTERRUPTING RATING		14. WET BULB TEMPERATURE	15. DRY BULB TEMPERATURE

SECTION C - VISUAL AND ELECTRICAL/MECHANICAL INSPECTION

16. CHECK POINT	COND*	NOTES	CHECK POINT	COND*	NOTES
EXTERIOR OF EQUIPMENT			EQUIPMENT IDENTIFICATION		
COMPLETENESS OF ASSEMBLY			BRACING		
EQUIPMENT ROTATION			PROPER PHASE CONNECTIONS		
CHECK OIL LEVEL			REFERENCE DRAWINGS		
CHECK FUEL LEVEL			WORKING CLEARANCE		
PROPER EQUIPMENT GROUNDING			ANCHORAGE		
CHECK METERS/GAUGES			ALL FILTERS AND VENTS CLEAR		
TIGHTNESS OF BOLTED CONNECTIONS			CHECK EQUIPMENT ENVIRONMENTAL CLASSIFICATION		
VERIFY GOVERNOR AND REGULATOR			CHECK FOR PROVISIONS OF SPILL CONTAINER		
CHECK VIBRATION			CONTROL SYSTEM		
CHECK BATTERIES			CHECK FUEL FILTER		
CHECK RADIATOR FLUID			CHECK ALARM INDICATORS: PROPER COLOR FOR EACH FUNCTION		
PROPER SYSTEM GROUND					

SECTION D - ELECTRICAL TESTS

17. INSULATION RESISTANCE	A-GRD	B-GRD	C-GRD	A-B	B-C	C-A
@ V						
POLARIZATION INDEX RATIO = 10 MINUTE/1 MINUTE						
DC OVERPOTENTIAL TEST @ V						

18. NOTES

1. PERFORM 5 MEASUREMENTS AT ONE MINUTE INTERVALS.
2. DC HIPOT MEASUREMENTS SHOULD BEGIN AT 20% OF MAXIMUM TEST VOLTAGE AND INCREASE IN EQUAL INTERVALS.

MAX DC TEST VOLTAGE = R (2 x NAMEPLATE RATING) x 1.6

WHERE R = .8 FOR DC TEST ON INSTALLATION

WHERE R = .6 FOR DC TEST AFTER SERVICE

(TEST MEASUREMENTS SHOULD NOT EXCEED MANUFACTURER'S RECOMMENDATION)

SECTION D - ELECTRICAL TESTS *(Continued)*

19. MEASUREMENT DESCRIPTION	VOLTAGE AND CURRENT MEASUREMENTS										
	VOLTAGE**						CURRENT**				
	A-N	B-N	C-N	A-B	B-C	C-A	A	B	C	N	G

20. LOAD TESTS AS A PERCENTAGE OF GENERATOR RATING

	NO LOAD	25 %	75 %	100 %	110% (PRIME ENGINE ONLY)
A-N					
B-N					
C-N					
A-B					
B-C					
C-A					
A					
B					
C					
N					
G					

21. NOTES

1. VOLTAGE MEASUREMENT TO BE MADE AFTER GENERATOR IS STARTED AND CONNECTED TO LOAD (CAN USE LOAD BANK).

2. DURING COMMISSIONING OF GENERATOR SETS OR ANY EQUIPMENT, A REPRESENTATIVE OF THE MANUFACTURING COMPANY OR SUPPLIER MUST BE PRESENT TO WITNESS AND/OR PERFORM THE TESTS.

3. ENGINE GENERATOR TESTING IS A VERY INTENSIVE PROCESS AND REQUIRES A 10 TO 14 HOUR DAY DEPENDING ON THE EQUIPMENT BEING COMMISSIONED. SUPPLIER/MANUFACTURER NORMALLY SUPPLY GENERATOR TESTING LOAD REQUIREMENTS.

4. VERIFY ALL SYSTEM CHECK POINTS DURING LOAD CHANGES AND RECORD PER SPECIFIED REQUIREMENTS AND/OR EQUIPMENT MANUFACTURER.

5. PERFORM AND RECORD ENGINE MANUFACTURER'S RECOMMENDED CHECKS AND INSPECTIONS.

*CONDITION: A=ACCEPTABLE; R=NEEDS REPAIR, REPLACEMENT OR ADJUSTMENT; C=CORRECTED; NA=NOT APPLICABLE
**NOTE VALUE AND PHASING

UTILITY AND GENERATOR CIRCUIT BREAKER INSPECTION CHECKLIST

For use of this form see TM 5-694; the proponent agency is COE.

SECTION A - CUSTOMER DATA

PLANT/BUILDING	2. LOCATION	3. JOB NUMBER
4. EQUIPMENT	5. CIRCUIT DESIGNATION	6. DATE *(YYYYMMDD)*
7. TEST EQUIPMENT AND CALIBRATION DATE		8. TESTED BY

SECTION B - EQUIPMENT DATA

9. MANUFACTURER	10. STYLES/S.O.	11. VOLTAGE RATING	12. CURRENT RATING
13. CIRCUIT BREAKER SIZE AND INTERRUPTING RATING		14. EQUIPMENT CLASSIFICATION	15. FREQUENCY

SECTION C - VISUAL AND ELECTRICAL/MECHANICAL INSPECTION

16. CHECK POINT	COND*	NOTES	CHECK POINT	COND*	NOTES
EXTERIOR OF EQUIPMENT			BRACING		
COMPLETENESS OF ASSEMBLY			PROPER PHASE CONNECTIONS AND COLOR CODE		
EXECTRICAL/MECHANICAL INTERLOCKS			HAZARDOUS LOCATION		
PROPER GROUNDING			WORKING CLEARNACE		
CONTACT RESISTANCE			ANCHORAGE		
AUXILIARY WIRING			REFERENCE DRAWINGS		
PROPER LUBERICATION			CHECK MANUAL OPERATION OF CIRCUIT BREAKER AND RELAYS		
TIGHTNESS OF BOLTED CONNECTIONS			RELAYS TESTED (ACCORDING TO ELECTRICAL STUDY RECOMMENDATIONS)		
EQUIPMENT IDENTIFICATION					

SECTION D - ELECTRICAL TESTS

17. INSULATION RESISTANCE	A-GRD	B-GRD	C-GRD	A-B	B-C	C-A
@ V						

18. NOTES

1. MANUFACTURER'S INSTALLATION TESTS/CHECKS SHOULD BE IMPLEMENTED.

*CONDITION: A=ACCEPTABLE; R=NEEDS REPAIR, REPLACEMENT OR ADJUSTMENT; C=CORRECTED; NA=NOT APPLICABLE
**NOTE VALUE AND PHASING

BACK-UP POWER SYSTEM INSPECTION CHECKLIST

For use of this form see TM 5-694; the proponent agency is COE.

SECTION A - CUSTOMER DATA

. PLANT/BUILDING	2. LOCATION	3. JOB NUMBER
4. EQUIPMENT	5. CIRCUIT DESIGNATION	6. DATE *(YYYYMMDD)*
7. TEST EQUIPMENT AND CALIBRATION DATE		8. TESTED BY

SECTION B - EQUIPMENT DATA

9. MANUFACTURER	10. STYLES/S.O.	11. VOLTAGE RATING	12. CURRENT RATING
13. EQUIPMENT CLASSIFICATION	14. FREQUENCY	15. WET BULB TEMPERATURE	16. DRY BULB TEMPERATURE

SECTION C - VISUAL AND ELECTRICAL/MECHANICAL INSPECTION

17. CHECK POINT	COND*	NOTES	CHECK POINT	COND*	NOTES
COMPONENT INSPECTION/TESTING			WIRING VISUAL VERIFICATION		
ENERGIZE AND TEST SYSTEM			UTILITY TRIP/GENERATOR BUILDING LOAD TEST		
INSTALLATION INSPECTION/TESTING			TIGHTNESS OF BOLTED CONNECTIONS		
GENERATOR CONTROLS AND FUNCTIONS			CHECK FOR PROPER SIZE BREAKER		
WIRING CONTINUITY TESTING			REFERENCE DRAWINGS		
WORKING CLEARANCE			PROPER PHASING CONNECTIONS AND COLOR CODE		
SWITCHGEAR CONTROL FUNCTIONS					
PERFORM AUTOMATIC TRANSFER SYSTEM (ATS) FUNCTIONS UNDER THE ADJACENT CONDITIONS.	A. OPERATE NORMAL POWER				
	B. ALL GENERATORS OPERATE				
	C. GENERATORS 1 AND 2 OPERATE				
	D. GENERATORS 2 AND 3 OPERATE				
	E. GENERATORS 1 AND 3 OPERATE				
	F. RETURN TO NORMAL POWER AFTER EACH OF THE ABOVE TESTS				
	G. PARALLEL WITH UTILITY UPON RETURN TO NORMAL POWER (ITEMS B THROUGH E)				

SECTION D - ELECTRICAL TESTS

18. MEASUREMENT DESCRIPTION	VOLTAGE AND CURRENT MEASUREMENTS										
	VOLTAGE**						CURRENT**				
	A-N	B-N	C-N	A-B	B-C	C-A	A	B	C	N	G
	A-N	B-N	C-N	A-B	B-C	C-A	A	B	C	N	G

19. NOTES

1. CHECK FOR PROPER GROUNDING CONNECTIONS PRIOR TO ENERGIZING.

*CONDITION: A=ACCEPTABLE; R=NEEDS REPAIR, REPLACEMENT OR ADJUSTMENT; C=CORRECTED; NA=NOT APPLICABLE
**NOTE VALUE AND PHASING

TRANSFER SWITCH INSPECTION CHECKLIST

For use of this form see TM 5-694; the proponent agency is COE.

SECTION A - CUSTOMER DATA

PLANT/BUILDING	2. LOCATION	3. JOB NUMBER
4. EQUIPMENT	5. CIRCUIT DESIGNATION	6. DATE *(YYYYMMDD)*
7. TEST EQUIPMENT AND CALIBRATION DATE		8. TESTED BY

SECTION B - EQUIPMENT DATA

9. MANUFACTURER	10. STYLES/S.O.	11. VOLTAGE RATING	12. CURRENT RATING
13. SWITCH RATING		14. ENCLOSURE TYPE	15. FREQUENCY

16. **SECTION C - VISUAL AND ELECTRICAL/MECHANICAL INSPECTION**

CHECK POINT	COND*	NOTES	CHECK POINT	COND*	NOTES
EXTERIOR OF EQUIPMENT			EQUIPMENT IDENTIFICATION		
COMPLETENESS OF ASSEMBLY			BRACING		
INDICATING LIGHTS			PROPER PHASE CONNECTIONS AND COLOR CODE		
SWITCH FOR FREEDOM OF MOVEMENT			ENVIRONMENTAL CLASSIFICATION		
ELECTRICAL/MECHANICAL INTERLOCKS			WORKING CLEARANCE		
ADJUST TIMING SETTINGS			ANCHORAGE		
PROPER EQUIPMENT GROUNDING			REFERENCE DRAWINGS		
CONTACT RESISTANCE			PROPER LUBRICATION		
TIGHTNESS OF BOLTED CONNECTIONS			PT AND CONTROL FUSE SIZE		

SECTION D - ELECTRICAL TESTS

17. INSULATION RESISTANCE @ V	A-GRD	B-GRD	C-GRD	A-B	B-C	C-A

18. NOTES

1. SWITCH TRANSFERS ON LOSS OF NORMAL POWER AT SPECIFIED TIME DELAY.
2. SWITCH TRANSFER BACK TO NORMAL POWER ON RETURN OF NORMAL POWER SERVICE AT SPECIFIED TIME DELAY.
3. AUXILIARY CONTACTS OPERATE CORRECTLY DURING NORMAL AND ABNORMAL POWER CONDITIONS.

*CONDITION: A=ACCEPTABLE; R=NEEDS REPAIR, REPLACEMENT OR ADJUSTMENT; C=CORRECTED; NA=NOT APPLICABLE

UNINTERRUPTIBLE POWER SUPPLY (UPS) INSPECTION CHECKLIST

For use of this form see TM 5-694; the proponent agency is COE.

SECTION A - CUSTOMER DATA

PLANT/BUILDING	2. LOCATION		3. JOB NUMBER
4. EQUIPMENT	5. CIRCUIT DESIGNATION FED TO	6. CIRCUIT DESIGNATION FED FROM	7. DATE *(YYYYMMDD)*
8. TEST EQUIPMENT AND CALIBRATION DATE			9. TESTED BY

SECTION B - EQUIPMENT DATA

10. MANUFACTURER	11. STYLES/S.O.	12. VOLTAGE RATING	13. kVA RATING

SECTION C - VISUAL AND ELECTRICAL/MECHANICAL INSPECTION

14. CHECK POINT	COND*	NOTES	CHECK POINT	COND*	NOTES
EXTERIOR OF EQUIPMENT			EQUIPMENT IDENTIFICATION		
COMPLETENESS OF ASSEMBLY			BRACING		
INDICATING LIGHTS			PROPER PHASE CONNECTIONS AND COLOR CODE		
SWITCH FOR FREEDOM OF MOVEMENT			ENVIRONMENTAL CLASSIFICATION		
MANUAL OPERATION OF CIRCUIT BREAKERS			WORKING CLEARANCE		
TIMING SETTINGS			ANCHORAGE		
PROPER GROUNDING			REFERENCE DRAWINGS		
PROPER VOLTAGE CONNECTIONS			CONTROL FUSE SIZE AND CONTINUITY		
TIGHTNESS OF BOLTED CONNECTIONS			VERIFY ALL TRANSFER SWITCH OPERATIONS		
TEST CIRCUIT BREAKERS WITH CURRENT INJECTION TESTER					

SECTION D - ELECTRICAL TESTS

15. VAC (OUTPUT)	A-GRD	B-GRD	C-GRD	A-B	B-C	C-A

16. NOTES

*CONDITION: A=ACCEPTABLE; R=NEEDS REPAIR, REPLACEMENT OR ADJUSTMENT; C=CORRECTED; NA=NOT APPLICABLE

BATTERY INSPECTION CHECKLIST

For use of this form see TM 5-694; the proponent agency is COE.

SECTION A - CUSTOMER DATA

1. PLANT/BUILDING	2. LOCATION	3. JOB NUMBER
4. EQUIPMENT	5. CIRCUIT DESIGNATION	6. DATE *(YYYYMMDD)*
7. TEST EQUIPMENT AND CALIBRATION DATE		8. TESTED BY

SECTION B - EQUIPMENT DATA

9. MANUFACTURER	10. STYLES/S.O.	11. VOLTAGE RATING	12. CURRENT RATING
13. ENCLOSURE TYPE	14. FREQUENCY	15. WET BULB TEMPERATURE	16. DRY BULB TEMPERATURE

SECTION C - VISUAL AND ELECTRICAL/MECHANICAL INSPECTION

17. CHECK POINT	COND*	NOTES	CHECK POINT	COND*	NOTES
EXTERIOR OF EQUIPMENT			EQUIPMENT IDENTIFICATION		
COMPLETENESS OF ASSEMBLY			BRACING		
ELECTROLYTE LEVEL			ENVIRONMENTAL CLASSIFICATION		
VENTS SEALED AND PLUGS INSTALLED			WORKING CLEARANCE		
PROPER POLARITY CONNECTIONS			ANCHORAGE		
TIGHTNESS OF BOLTED CONNECTIONS			CHECK FOR EXHAUST FAN IF IN ENCLOSED ENVIRONMENT		
PROPER GROUNDING			REFERENCE DRAWINGS		
CHECK FOR SHOWER AND EYEWASH STATION			CHECK FOR ACCESS TO BATTERIES FOR O & M		
TEST CIRCUIT BREAKERS WITH CURRENT INJECTION TESTER			CHECK UPS CONTROL PANEL ALARMS		
TEST CIRCUIT BREAKERS			TEST TRANSFER SWITCH		

SECTION D - ELECTRICAL TESTS

18. MEASUREMENT DESCRIPTION	VOLTAGE AND CURRENT MEASUREMENTS				
	VOLTAGE**		CURRENT**		
	POSITIVE	NEGATIVE	POSITIVE	NEGATIVE	GROUND
BATTERY VOLTAGE & CURRENT					

19. NOTES

1. MEASURE RESISTANCE BETWEEN CELL CONNECTIONS.
2. MEASURE VOLTAGE ACROSS EACH CELL.
3. CHECK SPECIFIC GRAVITY OF EACH CELL.
4. TEST AND MAINTAIN BATTERY (CELLS) IN ACCORDANCE WITH MANUFACTURERS RECOMMENDATIONS.

*CONDITION: A=ACCEPTABLE; R=NEEDS REPAIR, REPLACEMENT OR ADJUSTMENT; C=CORRECTED; NA=NOT APPLICABLE
**NOTE VALUE AND PHASING

UNINTERRUPTIBLE POWER SUPPLY (UPS) SWITCHBOARD INSPECTION CHECKLIST

For use of this form see TM 5-694; the proponent agency is COE.

SECTION A - CUSTOMER DATA

PLANT/BUILDING	2. LOCATION	3. JOB NUMBER
4. EQUIPMENT	5. CIRCUIT DESIGNATION	6. DATE *(YYYYMMDD)*
7. TEST EQUIPMENT TYPE/BRAND AND CALIBRATION DATE		8. TESTED BY

SECTION B - EQUIPMENT DATA

9. MANUFACTURER	10. STYLES/S.O.	11. VOLTAGE RATING	12. CURRENT RATING
13. BUS RATING/CB INTERRUPTING RATING			

SECTION C - VISUAL AND ELECTRICAL/MECHANICAL INSPECTION

14. CHECK POINT	COND*	NOTES	CHECK POINT	COND*	NOTES
EXTERIOR OF EQUIPMENT			BRACING		
COMPLETENESS OF ASSEMBLY			PROPER PHASE CONNECTION AND COLOR CODE		
INDICATING LIGHTS			ENVIRONMENTAL CLASSIFICATION		
MANUAL OPERATION OF CIRCUIT BREAKERS			WORKING CLEARANCE		
PROPER GROUNDING			ANCHORAGE		
CONDITION OF INSULATION			REFERENCE DRAWINGS		
PROPER VOLTAGE CONNECTIONS			VERIFY PROPER SIZES OF BREAKERS AND FUSES		
TIGHTNESS OF BOLTED CONNECTIONS			CHECK PROPER EQUIPMENT GROUNDING TO GROUNDING BUS		
EQUIPMENT IDENTIFICATION					

SECTION D - ELECTRICAL TESTS

15. BUS INSULATION RESISTANCE	A-GRD	B-GRD	C-GRD	A-B	B-C	C-A
@ V						

16. NOTES

1. TEST ALL CIRCUIT BREAKERS ACCORDING TO MANUFACTURER'S RECOMMENDATIONS.

*CONDITION: A=ACCEPTABLE; R=NEEDS REPAIR, REPLACEMENT OR ADJUSTMENT; C=CORRECTED; NA=NOT APPLICABLE

UNINTERRUPTIBLE POWER SUPPLY (UPS) SYSTEM INSPECTION CHECKLIST

For use of this form see TM 5-694; the proponent agency is COE.

SECTION A - CUSTOMER DATA

PLANT/BUILDING	2. LOCATION	3. JOB NUMBER
4. EQUIPMENT	5. CIRCUIT DESIGNATION	6. DATE *(YYYYMMDD)*
7. TEST EQUIPMENT		8. TESTED BY

SECTION B - VISUAL AND ELECTRICAL/MECHANICAL INSPECTION

9. CHECK POINT	COND*	NOTES	CHECK POINT	COND*	NOTES
COMPONENT INSPECTION/TESTING			ENERGIZE AND TEST SYSTEM		
INSTALLATION INSPECTION/TESTING			UTILITY TRIP TEST		
WIRING VISUAL VERIFICATION			LOADED TRANSFER TEST (NORMAL, EMERGENCY & RETURN)		
GENERATOR CONTROL FUNCTIONS			TIGHTNESS OF BOLTED CONNECTIONS		
LOADING UPS TEST			BATTERY DISCHARGE TEST		
DISCONNECT RECTIFIERS & INVERTERS SEPARATELY. DOES SYSTEM OPERATE CORRECTLY?			TEST ALL UPS DIAGNOSTIC FAULT INDICATORS		

SECTION D - ELECTRICAL TESTS

10.	A-N	B-N	C-N	A-B	B-C	C-A	A	B	C	N	G
UPS INPUT											
UPS OUTPUT											
UPS SWITCHBOARD HARMONIC (THD)											

11. NOTES

*CONDITION: A=ACCEPTABLE; R=NEEDS REPAIR, REPLACEMENT OR ADJUSTMENT; C=CORRECTED; NA=NOT APPLICABLE
**NOTE VALUE AND PHASING

PIN: 080195-000