TECHNICAL MANUAL

UNINTERRUPTIBLE POWER SUPPLY SYSTEM SELECTION, INSTALLATION, AND MAINTENANCE FOR COMMAND, CONTROL, COMMUNICATIONS, COMPUTER, INTELLIGENCE, SURVEILLANCE, AND RECONNAISSANCE (C4ISR) FACILITIES

APPROVED FOR PUBLIC RELEASE: DISTRIBUTION IS UNLIMITED

HEADQUARTERS, DEPARTMENT OF THE ARMY
31 MAY 2002

REPRODUCTION AUTHORIZATION/RESTRICTIONS

This manual has been prepared by or for the Government and, except to the extent indicated below, is public property and not subject to copyright.

Reprint or republication of this manual should include a credit substantially: "Department of the Army, TM 5-693, Uninterruptible Power Supply System Selection, Installation, and Maintenance for Command, Control, Communications, Computer, Intelligence, Surveillance, and Reconnaissance (C4ISR) Facilities, *31 May 2002."*

Table 2-2. Harmonic currents present in input current to a typical rectifier in per-unit of the fundamental current reprinted with permission from IEEE Std. 519-1981 "*IEEE Guide for Harmonic Control and Reactive Compensation of Static Power Converters*", copyright © 1981 by IEEE. The IEEE disclaims any responsibility of liability resulting from the placement and use in the described manner.

Table 3-1. IEEE table 3-2 reprinted with permission from IEEE Orange Book, "Emergency and Standby Power Systems for Industrial and Commercial Applications" Copyright © 1996, by IEEE. The IEEE disclaims any responsibility of liability resulting from the placement and use in the described manner.

Technical Manual
No. 5-693

HEADQUARTERS
DEPARTMENT OF THE ARMY
Washington, DC, 31 May 2002

APPROVED FOR PUBLIC RELEASE; DISTRIBUTION IS UNLIMITED

Uninterruptible Power Supply System Selection, Installation, and Maintenance for Command, Control, Communications, Computer, Intelligence, Surveillance, and Reconnaissance (C4ISR) Facilities

		Paragraph	*Page*
CHAPTER 1	INTRODUCTION		
	Purpose	1-1	1-1
	Scope	1-2	1-1
	References	1-3	1-1
	Principles and configurations	1-4	1-1
	Design criteria and selection	1-5	1-3
	Installation and testing	1-6	1-3
	Maintenance	1-7	1-4
CHAPTER 2	PRINCIPLES AND CONFIGURATIONS OF UNINTERRUPTIBLE POWER SUPPLY (UPS) SYSTEMS		
	Principles of static UPS systems	2-1	2-1
	Principles of rotary UPS systems	2-2	2-29
	Common static UPS system configurations	2-3	2-33
	Rotary UPS system configurations	2-4	2-36
CHAPTER 3	DESIGN AND SELECTION OF UNINTERRUPTIBLE POWER SUPPLY (UPS)		
	Selecting an UPS	3-1	3-1
	Static UPS system ratings and size selection	3-2	3-13
	Rotary UPS system ratings and size selection	3-3	3-18
CHAPTER 4	INSTALLATION AND TESTING OF UNINTERRUPTIBLE POWER SUPPLY (UPS)		
	Construction and installation of static UPS systems	4-1	4-1
	Construction and installation of rotary UPS systems	4-2	4-6
	Power distribution and equipment grounding and shielding requirements	4-3	4-7
	Testing and start-up	4-4	4-11
	Test equipment	4-5	4-19
CHAPTER 5	UNINTERRUPTIBLE POWER SUPPLY (UPS) SYSTEMS MAINTENANCE PROCEDURES		
	Maintenance for UPS systems	5-1	5-1
	UPS battery maintenance	5-2	5-5
APPENDIX A	REFERENCES		A-1

APPENDIX B SELECTING AN UNINTERRUPTIBLE POWER SUPPLY (UPS): AN EXAMPLE B-1

GLOSSARY G-1

INDEX I-1

LIST OF TABLES

Table	*Title*	*Page*
Table 2-1	Characteristics of UPS battery types	2-23
Table 2-2	Harmonic currents present in input current to a typical rectifier in per-unit of the fundamental current	2-26
Table 3-1	General criteria for determining the purposes of an UPS	3-3
Table 3-2	Comparison of reliability of parallel redundant and parallel configurations	3-9
Table 3-3	Criteria for evaluating UPS battery	3-11
Table 3-4	Typical rectifier/charger ratings	3-14
Table 3-5	Typical inverter ratings	3-14
Table 3-6	Typical static switch ratings	3-14
Table 3-7	Typical environmental ratings	3-14
Table 3-8	Typical load power factors and inrush requirements	3-15
Table 3-9	Updated typical rotary UPS ratings	3-18
Table 4-1	Circuit breaker corrective action	4-19
Table 4-2	Rectifier/battery charger corrective action	4-20
Table 4-3	Battery corrective action	4-20
Table 4-4	Inverter/static switch corrective action	4-21
Table 4-5	UPS system corrective action	4-21
Table 4-6	Motor/engine corrective action	4-22
Table 4-7	Generator corrective action	4-22
Table 4-8	Suggested test accessory list for battery maintenance	4-22
Table 4-9	Suggested test equipment list for troubleshooting an UPS module	4-23
Table 5-1	Major system inspection general	5-3
Table 5-2	Weekly battery inspection	5-6
Table 5-3	Monthly battery inspection	5-6
Table 5-4	Quarterly battery inspection	5-7
Table 5-5	Annual battery inspection	5-8

LIST OF FIGURES

Figure	*Title*	*Page*
Figure 1-1	Simple version of a static UPS	1-2
Figure 1-2	Rotary UPS (shown with primary power on)	1-2
Figure 2-1	Basic static UPS system	2-1
Figure 2-2	SCR static switching transfer	2-3
Figure 2-3	SCR switching transfer with UPS isolation	2-4

LIST OF FIGURES (continued)

Figure	*Title*	*Page*
Figure 2-4	Static switching transfer with circuit breaker	2-5
Figure 2-5	UPS maintenance bypass switching	2-6
Figure 2-6	Half-wave diode rectifier with resistive load	2-7
Figure 2-7	Half-wave SCR rectifier with resistive load	2-7
Figure 2-8	Center-tap full-wave uncontrolled rectifier	2-9
Figure 2-9	Full-wave bridge uncontrolled rectifier	2-10
Figure 2-10	Three-phase uncontrolled single way rectifier	2-11
Figure 2-11	Three-phase uncontrolled bridge rectifier	2-12
Figure 2-12	Single-phase controlled bridge rectifier	2-13
Figure 2-13	Three-phase controlled bridge rectifier	2-14
Figure 2-14	Simple single-phase inverter	2-15
Figure 2-15	Voltage control using pulse width control	2-16
Figure 2-16	Pulse width modulation (PWM)	2-17
Figure 2-17	Ferroresonant transformer	2-18
Figure 2-18	Three-phase inverter	2-19
Figure 2-19	Single-phase static transfer switch	2-20
Figure 2-20	Inertia-driven ride-through system	2-29
Figure 2-21	Battery supported motor generator (M-G) set	2-30
Figure 2-22	Nonredundant static UPS system	2-33
Figure 2-23	Static UPS system with static transfer switch	2-34
Figure 2-24	Static UPS system with static transfer switch and an alternate source regulating transformer	2-34
Figure 2-25	Redundant static UPS system	2-35
Figure 2-26	Cold standby redundant static UPS system	2-36
Figure 2-27	Dual redundant static UPS system with static transfer switches	2-37
Figure 2-28	Inertia-driven ride-through system with a synchronous motor	2-38
Figure 2-29	Inertia-driven ride-through system with an induction motor and an eddy current clutch	2-38
Figure 2-30	Battery supported inertia system	2-39
Figure 2-31	Battery supported M-G set	2-39
Figure 3-1	Determine the general need for an UPS	3-1
Figure 3-2	Determine the facility need for an UPS	3-2
Figure 3-3	Determine the required power is a key step in the UPS selection process	3-7
Figure 3-4	Redundancy improves system reliability	3-9
Figure 3-5	Basic redundant UPS designs	3-10
Figure 3-6	Determining affordability requires that all costs be considered	3-12
Figure 4-1	Static UPS system 150 to 750 kVA (courtesy of Liebert)	4-2
Figure 4-2	Various battery rack configurations (courtesy of Excide Electronics)	4-3
Figure 4-3	Double-ended substation connected in secondary selective configuration	4-5
Figure 4-4	Rotary UPS system 200 kVA to 10,000 kVA (courtesy of HITEC Power Protection)	4-6
Figure 4-5	Single-point grounding example [reproduced from Federal Information Processing Standards Publications (FIPS pub) 94]	4-10
Figure 4-6	Multi-point grounding example [reproduced from Federal Information Processing Standards Publications (FIPS pub) 94]	4-11
Figure 4-7	UPS distribution panels	4-18

CHAPTER 1

INTRODUCTION

1-1. Purpose

The purpose of this publication is to provide guidance for facilities engineers in selecting, installing, and maintaining an uninterruptible power supply (UPS) system after the decision has been made to install it. This technical manual (TM) TM 5-693 has been prepared to provide generic guidance to agencies responsible for the selection, installation, and maintenance of UPS systems at Command, Control, Communications, Computer, Intelligence, Surveillance, and Reconnaissance (C4ISR) facilities. Although it is written mainly for C4ISR facilities, which require a higher level of reliability, it could also be utilized as a reference in similar applications.

1-2. Scope

The process for identifying the need for an UPS system, selecting, installing, and maintaining the UPS system are covered. Covered are: theory and principles of static and rotary UPS systems, design and selection of UPS, installation and testing of UPS, maintenance and operation of UPS systems, principles of static and rotary UPS, UPS system rating and sizing selection, operations/maintenance, batteries, troubleshooting, harmonic distortions, grounding, checklists, and acceptance testing.

1-3. References

A complete list of references is contained in appendix A. The design, installation, and maintenance of UPS systems should follow the latest industry and commercial codes and standards as detailed in the references.

1-4. Principles and configurations

An UPS system is an alternate or backup source of power with the electric utility company being the primary source. The UPS provides protection of load against line frequency variations, elimination of power line noise and voltage transients, voltage regulation, and uninterruptible power for critical loads during failures of normal utility source. An UPS can be considered a source of standby power or emergency power depending on the nature of the critical loads. The amount of power that the UPS must supply also depends on these specific needs. These needs can include emergency lighting for evacuation, emergency perimeter lighting for security, orderly shut down of manufacturing or computer operations, continued operation of life support or critical medical equipment, safe operation of equipment during sags and brownouts, and a combination of the preceding needs.

a. Static UPS. A static UPS is a solid-state system relying solely on battery power as an emergency source. A static UPS consists of a rectifier, inverter, and an energy storage device, i.e., one or more batteries. The inverter in the static UPS also includes components for power conditioning. Modern static UPS systems are constructed with ratings ranging from about 220 VA to over 1 MVA. Static UPSs ranging from 220 VA to 1 MVA are constructed without paralleling internal components. UPS with output higher than 1 MVA are built with some parallel internal components, which result in decreasing reliability. Figure 1-1 shows a simple

static UPS. Design, installation, and maintenance requirements should follow the latest version of applicable codes and standards from recognized industry and commercial groups.

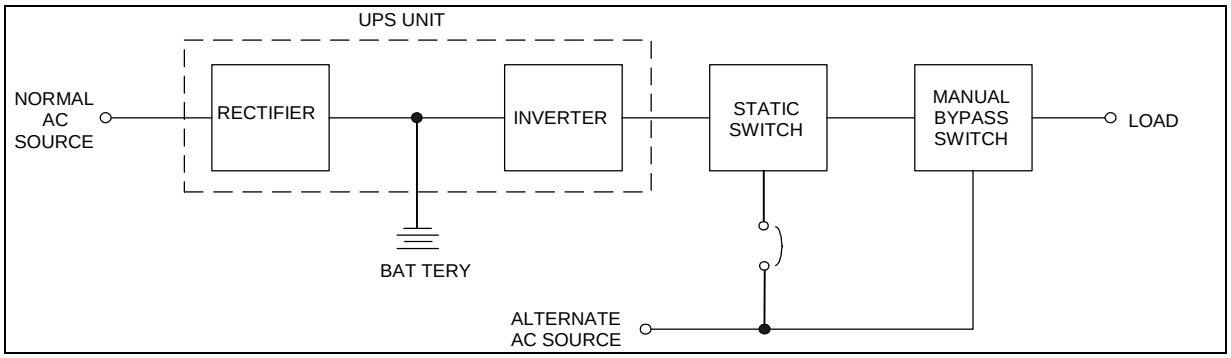

Figure 1-1. Simple version of a static UPS

b. Rotary UPS. A rotary UPS is a system that uses a motor-generator (M-G) set in its design. Figure 1-2 illustrates a simple rotary UPS. Unlike static units, the basic parts may vary between manufacturers for rotary units. Rotary units are mainly designed for large applications, 125 kVA or higher. Some reasons for selecting a rotary UPS over a static UPS are to provide higher efficiency, superior fault clearing capability, capability of supplying currents for high inrush loads, and isolation from harmonic distortion generated by non-linear loads in the line. Rotary UPS bearings must be replaced periodically. Although this might make reliability between the two types debatable, bearing failure is highly predictable with stringent routine testing. Rotary units produce more heat than do static units due to their M-G sets. They are more costly for small capacities but become competitive with static units around 300 kVA. Rotary units provide complete electrical isolation where the static UPS is limited by the static switch. Extremely high voltages or rapidly rising voltages can pass through the static switch and damage critical loads.

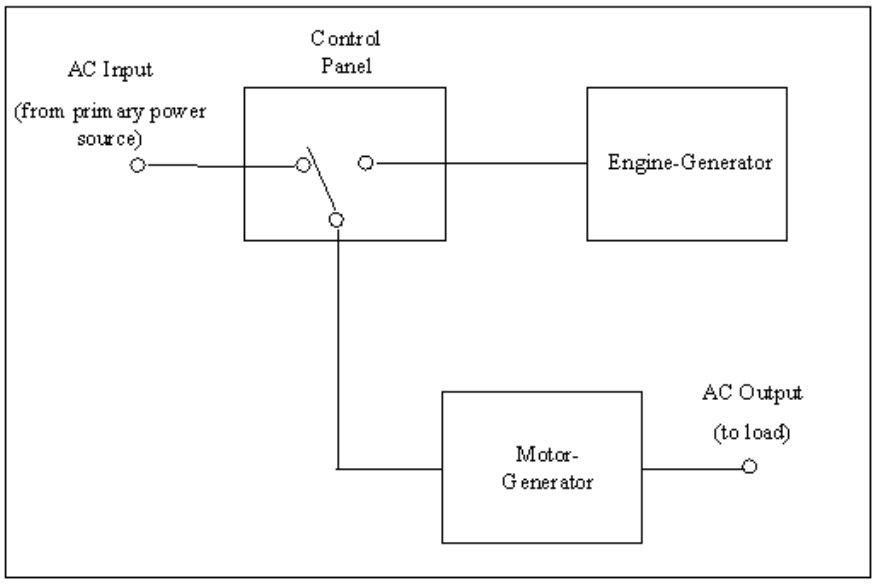

Figure 1-2. Rotary UPS (shown with primary power on)

1-5. Design criteria and selection

The UPS selection process involves several steps as discussed briefly here. These steps are discussed in further detail in chapter 3.

a. Determine need. Prior to selecting the UPS it is necessary to determine the need. The types of loads may determine whether local, state, or federal laws mandate the incorporation of an UPS. An UPS may be needed for a variety of purposes such as lighting, startup power, transportation, mechanical utility systems, heating, refrigeration, production, fire protection, space conditioning, data processing, communication, life support, or signal circuits. Some facilities need an UPS for more than one purpose. It is important to determine the acceptable delay between loss of primary power and availability of UPS power, the length of time that emergency or backup power is required, and the criticality of the load that the UPS must bear. All of these factors play into the sizing of the UPS and the selection of the type of the UPS.

b. Determine safety. It must be determined if the safety of the selected UPS is acceptable. The UPS may have safety issues such as hydrogen accumulation from batteries, or noise pollution from solid-state equipment or rotating equipment. These issues may be addressed through proper precautions or may require a selection of a different UPS.

c. Determine availability. The availability of the selected UPS must be acceptable. The criticality of the loads will determine the necessary availability of the UPS. The availability of an UPS may be improved by using different configurations to provide redundancy. It should be noted that the C4ISR facilities require a reliability level of 99.9999 percent.

d. Determine maintainability. The selected UPS must be maintainable. Maintenance of the unit is important in assuring the unit's availability. If the unit is not properly cared for, the unit will be more likely to fail. Therefore, it is necessary that the maintenance be performed as required. If the skills and resources required for the maintenance of the unit are not available, it may be necessary to select a unit requiring less maintenance.

e. Determine if affordable. The selected UPS must be affordable. While this is the most limiting factor in the selection process, cost cannot be identified without knowing the other parameters. The pricing of the unit consists of the equipment cost as well as the operating and maintenance costs. Disposal costs of the unit should also be considered for when the unit reaches the end of its life.

f. Re-evaluate steps. If these criteria are not met, another UPS system must be selected and these steps re-evaluated.

1-6. Installation and testing

The installation and testing of the UPS is critical to its proper operation. These items are discussed in greater detail in chapter 4.

a. Features. The UPS shall be installed with all necessary features. Features such as alarms, indicators, control devices, and protective devices are installed to assist in the safe operation of the unit. Power and control components such as meters, indicating lights, control switches, push buttons, and potentiometers are typically located in a nearby cabinet. Batteries are typically installed on battery racks. The design of the racks varies based on the available space and number of batteries.

b. Location. The UPS shall be installed on a level surface with sufficient clearance to allow for ventilation and access to maintenance panels. Static UPSs require environments with a controlled atmosphere where the temperature, humidity, and dust levels are carefully maintained. The batteries of the UPS require ventilation of the room to prevent hydrogen buildup. Rotary UPSs are suitable for placement in industrial environments.

c. Protection. The UPS power distribution system shall be designed to provide short circuit protection, isolate branch faults, and isolate critical loads from sources of harmonics, surges, and spikes. This is achieved using panelboards, circuit breakers, and fuses. The UPS system is grounded to ensure the safety of the operating personnel. Shielding of the control cables shall be achieved by running power cables in bonded metal enclosures separately from the control cable's enclosures.

d. Testing and startup. Testing and startup shall be performed to ensure the component's operation once energized. Acceptance testing should be performed on all equipment. Testing records on test forms should be kept for comparison to later routine maintenance tests. The possible failures of the equipment drawn out from the test results should be discussed and corrective action implemented. Test equipment used should be in accordance with the manufacturer's recommendation.

1-7. Maintenance

Maintenance of the UPS consists of preventive and corrective maintenance. Preventive maintenance consists of a scheduled list of activities. Performing these activities keeps the UPS in good working order and helps to prevent failures. Corrective maintenance is performed as a result of a failure. Corrective maintenance fixes the problem and gets the unit working again. Maintenance is covered in chapter 5.

CHAPTER 2

PRINCIPLES AND CONFIGURATIONS OF UNINTERRUPTIBLE POWER SUPPLY (UPS) SYSTEMS

2-1. Principles of static UPS systems

The basic static UPS system consists of a rectifier-charger, inverter, static switch, and battery as shown in figure 2-1. The rectifier receives the normal alternating current (ac) power supply, provides direct current (dc) power to the inverter, and charges the battery. The inverter converts the dc power to ac power to supply the intended loads. The dc power will normally be provided from the rectifier, and from the battery upon failure of the primary ac power source or the rectifier. The inverter will supply the loads under normal conditions. In the event of the failure of the inverter, the static switch transfers the load to an alternate ac source.

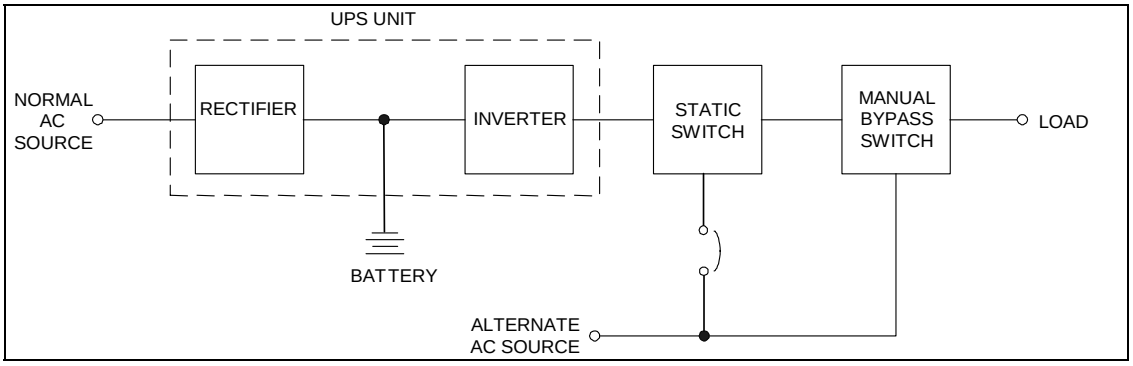

Figure 2-1. Basic static UPS system

a. Normal operation. During normal operation, the rectifier converts the ac input power to dc power with regulated voltage. The rectifier output is normally set at the battery float voltage to charge the battery while supplying dc power to the inverter. The rectifier output voltage is periodically set at the battery equalize voltage to maintain the battery capacity. The dc filter (inductor) is provided for smoothing out the rectifier output current to reduce the current ripple content. The battery acts as a capacitor and in conjunction with the filter, smoothes out the output voltage and reduces the dc voltage ripple content. The inverter converts the dc power to ac power with regulated voltage and frequency. An internal oscillator maintains the inverter frequency by controlling the timing of the silicon controlled rectifier (SCR) firing signals and matches the ac input frequency. The filters at the output transformer secondary are provided to filter out the harmonics in the inverter output. Tuned L-C filters are used - when required - to filter out the 5th and 7th harmonics while a capacitor is adequate for filtering out the higher order harmonics.

(1) Loss of normal power. Upon loss of ac power supply or upon failure of the rectifier, the battery maintains the dc supply to the inverter. The battery can maintain the dc supply to the inverter until the ac supply is restored or to the end of the battery duty cycle. Under this condition, the inverter continues to supply the connected loads without interruption. This mode of operation continues until the system is shut down if the battery reaches the discharged state before the charger output is restored. A system shutdown may be initiated manually or automatically by a dc undervoltage sensing device.

(2) Restoration of power. Upon restoration of the ac supply after extended outage while the battery has been discharged, the rectifier output voltage is set at the equalizing voltage to recharge the battery. This can be done manually or automatically. The charger will also supply the inverter while recharging the battery. At the end of the battery recharging time, the battery charger returns to the floating mode and the system returns to normal operation.

(3) Momentary loss of power. During momentary ac power interruptions or when the ac supply voltage sags below acceptable limits, the battery maintains the dc supply to the inverter. Under this condition, the inverter continues to supply the connected loads with regulated power without interruption.

b. Bypass mode. The static UPS systems may have three bypass switching arrangements: the UPS static switch (SS), the UPS static switch circuit breaker (SS-CB), and the maintenance circuit breaker.

(1) UPS static switch. When an UPS equipment problem occurs, the load is automatically transferred by the static switch bypass to an alternate power source to prevent power interruption to the loads. The static switch is also useful in clearing load faults downstream of the UPS. The static switch will transfer to the alternate power source on a setting of 110 to 125 percent of rated load. Without this feature, the inverter would be driven to current limit on a fault. The inverter would not supply sufficient current to trip the breaker and would continue to feed the fault causing a potential hazard. The transfer of the fault to the alternate power source by the static switch allows full short circuit current to pass through, thus tripping the circuit breaker. The static switch will then transfer back to the UPS for normal operation. Because the circuit cannot differentiate between an inrush and a fault current, it is common for the initial energization of a load to cause a temporary transfer to the alternate source power. When the inverter logic drops below a predetermined value, the bypass SCRs are gated-on by the static switch logic board and the UPS bypass line will supply the load. Retransfer to the UPS module can occur automatically when the logic senses that the UPS output problem has been eliminated. The logic system circuitry maintains the inverter output in synchronization with the UPS bypass power. The configuration of figure 2-2 does not provide the isolation capability of the figure 2-3 system. Reverse parallel SCRs can also be used as UPS power interrupters, that is, as an on-off switch to isolate a failed inverter occurring in a redundant UPS configuration.

(2) UPS static switch with circuit breaker (SS-CB). A hybrid UPS system uses an electromechanical switch in the inverter output with the reverse parallel SCRs provided only in the UPS bypass line. With an UPS output malfunction, the UPS bypass static switch will be turned on before the inverter output circuit breaker automatically opens. This type of hybrid switching will need only a short-term static switch current carrying (heat) rating and provides a normally reliable configuration if there are no problems with the circuit breaker closing in the static switch's 300 milliseconds (ms) rating. Figure 2-4 shows a SS-CB configuration where circuit breaker SS-CB closes after the UPS bypass static switch closes. The circuit breaker SS-CB provides a bypass for the static switch and therefore allows for the use of a short-term static switch current carrying (heat) rating. To prevent any damage to the static switch the circuit breaker must be able to close within the static switch's short time rating. There have been problems even though manufacturers quote a 450,000-hour mean-time-before-failure, so this system cannot be considered as reliable as a fully rated UPS bypass static switch. Hybrid switching is used as a method of combining the merits of both a static switch and a circuit breaker, that is, both speed and economy.

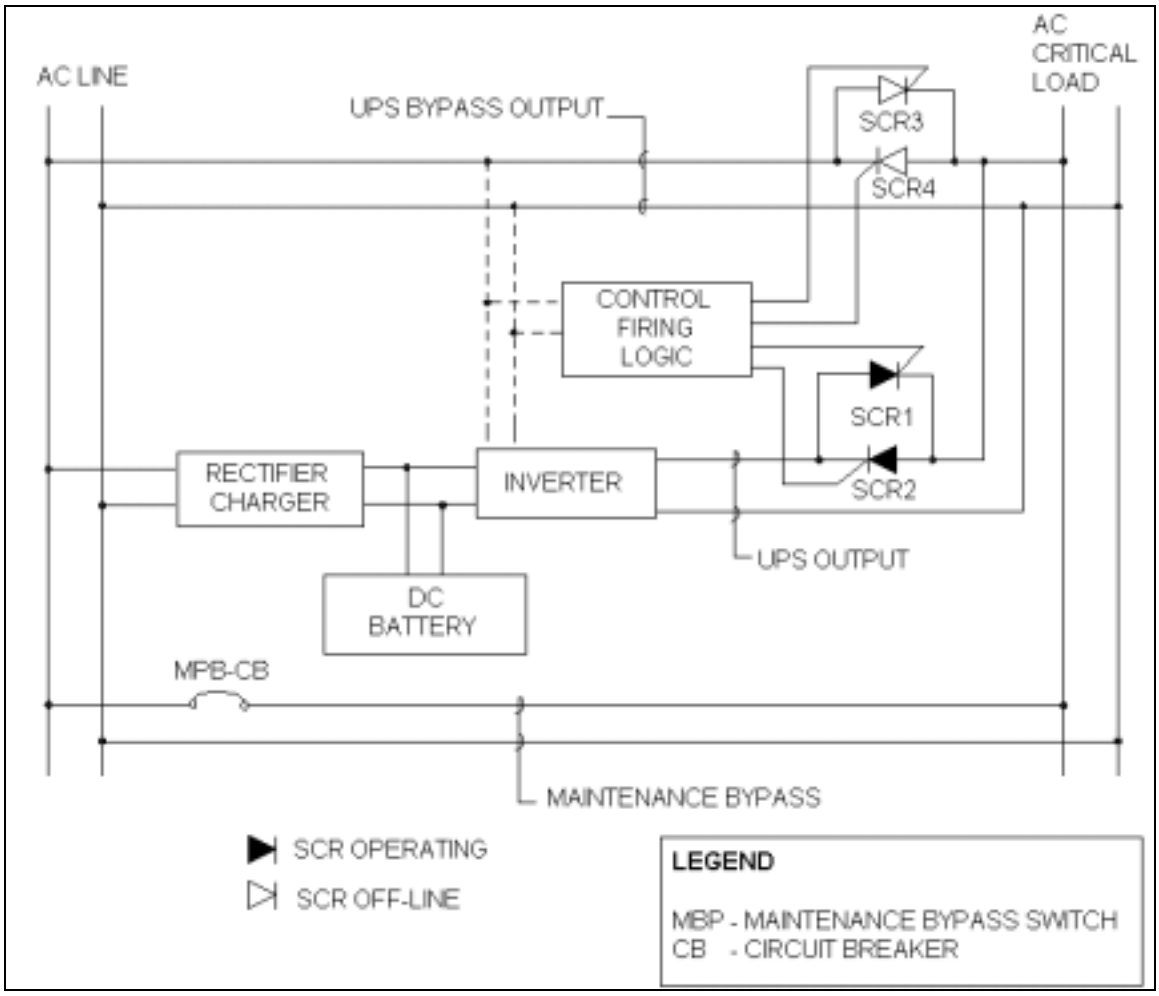

Figure 2-2. SCR static switching transfer

(3) Maintenance bypass circuit breaker. A bypass circuit breaker is provided to bypass the complete UPS system when maintenance of the UPS system is required. The UPS bypass line provides power continuity during UPS module malfunction periods. If the malfunction is such as to require UPS maintenance, then the load must be shifted to a maintenance bypass line, as shown on figure 2-5. An explanation as to why such a transfer is needed and the how such a transfer is configured is basic to comprehending UPS maintenance procedures.

(a) Purpose of maintenance bypass switch. It is unsafe to work on an energized UPS system. The complete system must be isolated from ac inputs, ac outputs, and the dc link whenever maintenance requires that the cabinet doors be opened and/or protective panels be removed. There are lethal voltages present in UPS cabinetry, resulting from the ac power applied to the converter or the dc power available from the battery. When energized, these circuits provide high voltage. Any portions of the system providing a redundant path, such as more than one UPS module or the static bypass, are tied together by the system logic so partial system shutdown for maintenance is not acceptable. Shutting off the battery for maintenance and running the UPS portion as a power conditioner should not be attempted since this also impacts on the system logic. After shutdown, all UPS systems should be load tested off-line. Approximately 85 percent of system failures occur after maintenance shutdowns which were not

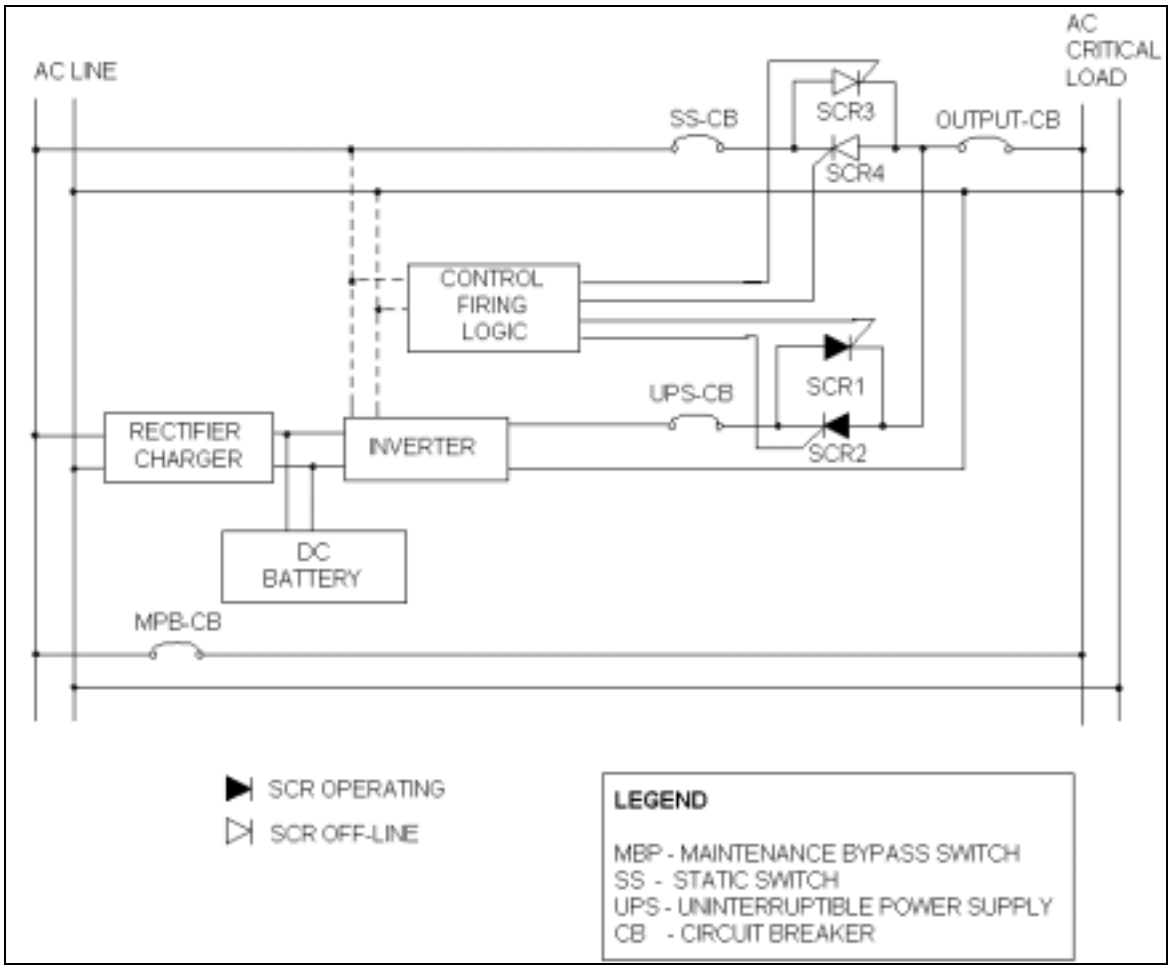

Figure 2-3. SCR switching transfer with UPS isolation

off-line load tested to assure proper operation. In order to shut down the complete UPS system, the load must be transferred to a line which is isolated electrically from the power and logic circuitry of the entire UPS installation.

(b) Operation of maintenance bypass switch. Close the UPS static bypass, which automatically opens the UPS module output circuit breaker (UPS-CB), allowing closing of the maintenance bypass circuit breaker (MBP-CB) before opening the UPS output circuit breaker (OUTPUT-CB). A closed transition has been made to an alternate supply for input to the critical load with no interruption. Now the UPS system as a whole can be de-energized for maintenance and off-line load testing. This is the basis for the interlocking requirements shown on figure 2-5.

c. Test mode. Off-line load testing of UPS systems after installation and scheduled maintenance is always necessary. A permanent load test tap or a circuit breaker and interlocking circuitry may be provided as part of the installation. Otherwise a temporary connection must be provided.

d. Characteristics and limitations. To avoid drawing heavy inrush currents from the power source upon initial energization, the battery charger is designed to assume the load gradually. Normally, the start-up current is limited to a maximum of 25 percent of the full load current. The

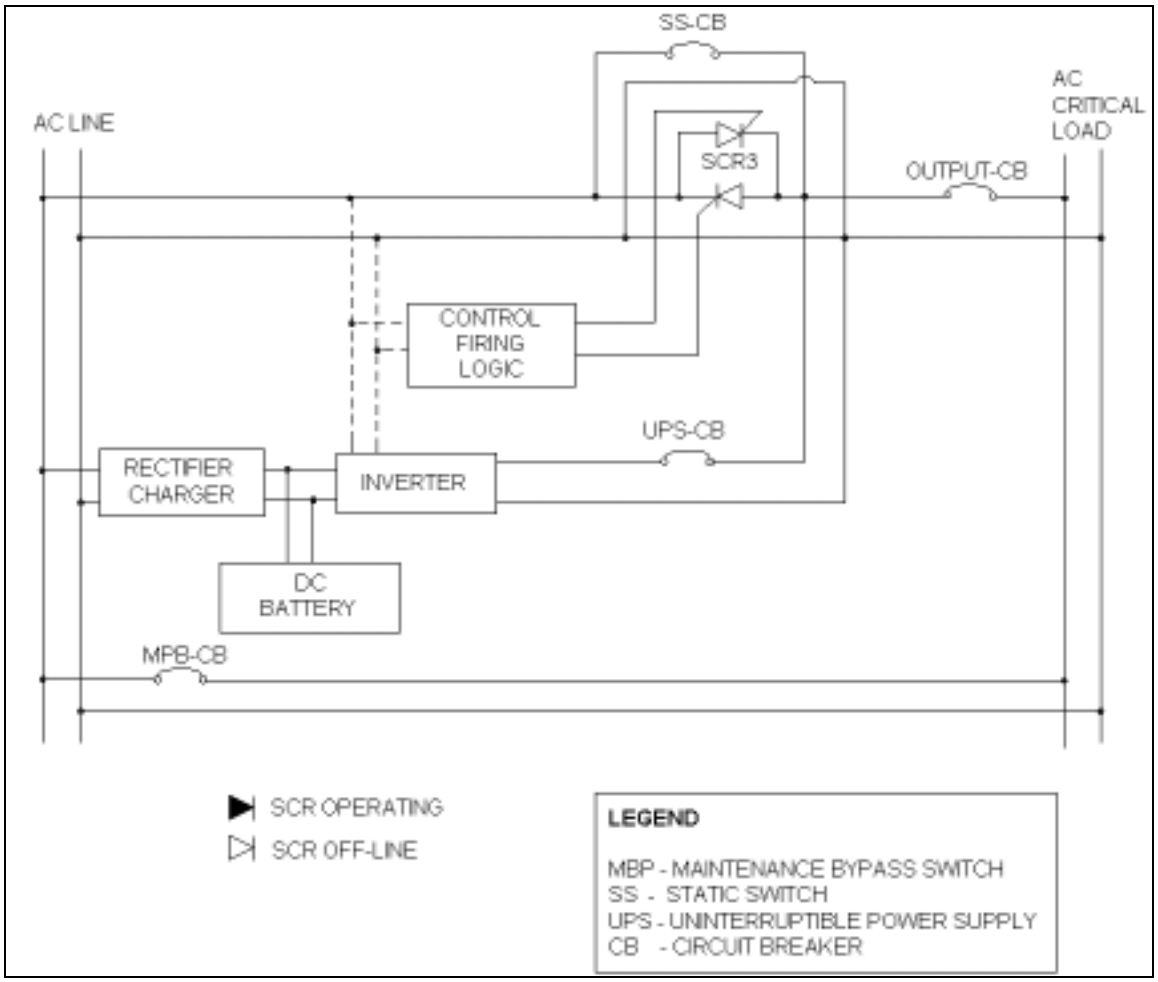

Figure 2-4. Static switching transfer with circuit breaker

current is then automatically increased gradually to the full load value in 15 to 30 seconds; this time is termed the "walk-in" time. For this reason all loads cannot be switched simultaneously if the battery has been fully discharged. Upon sudden application or removal of a load, the inverter's output voltage will drop or rise beyond the steady-state level. The voltage then returns to the steady-state condition after some short time which depends on the inverter's voltage control circuit design. These voltage variations are termed "transient voltage response" and the time required to return to steady-state conditions is termed the "recovery time." Generally, due to the absence of feedback regulating circuits in inverters with a ferroresonant transformer, the transient response is slower than that of inverters with pulse width or pulse width modulation (PWM) control techniques. SCRs have a limited overload capability. Also, heavy load currents may cause commutation failures. Therefore, the rectifier and inverter are designed to be self protected from overloads. The self protection circuit reduces the output voltage at currents exceeding the full load current. Normally, the inverter is designed to reduce the output voltage to zero at overloads of 115 to 135 percent rated load. The value of overcurrent at which the voltage is reduced to zero is termed "current limit." The inverter may reach the current limit condition when energizing a load with a high inrush current or during a load branch circuit fault.

e. Basic static UPS system without a dedicated battery. The basic system discussed above utilizes a dedicated battery as a backup source. The UPS system is provided with a controlled rectifier to supply the inverter and float/equalize charge the battery. In other applications, a large

battery bank may be available for supplying the UPS system as well as other loads. In such applications, a separate battery charger is provided to supply the connected load and float/equalize the battery. In this case, the UPS system is provided with a rectifier that only supplies the inverter and is isolated from the battery and other loads by a blocking diode. The blocking diode allows current to flow from the battery to the inverter while blocking the flow of current from the rectifier to the battery. Upon failure of the ac input power, the battery supplies the inverter as discussed above.

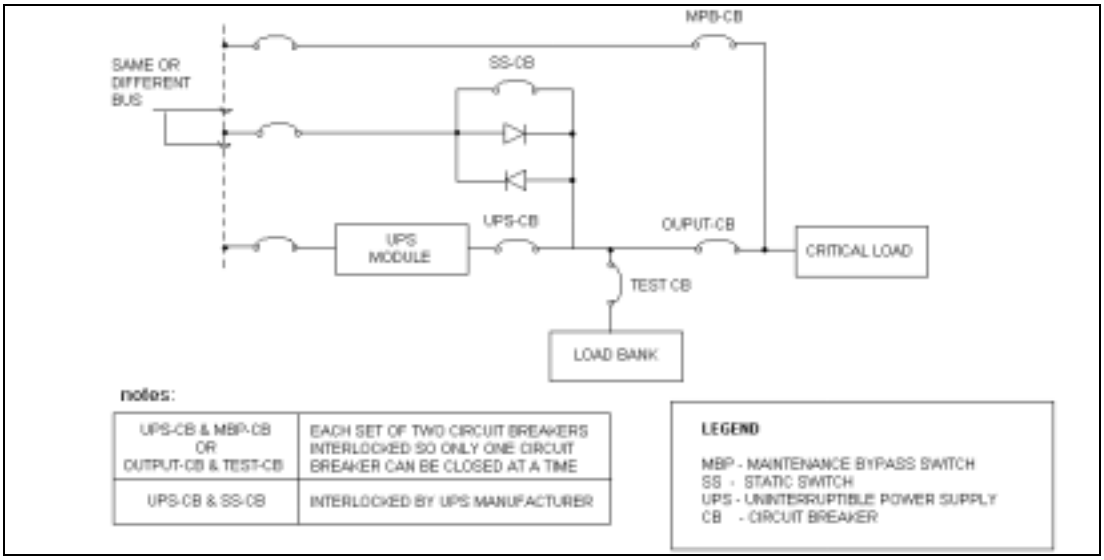

Figure 2-5. UPS maintenance bypass switching

f. Principles of rectifiers and inverters. UPS systems use power semiconductors in the construction of the rectifiers, inverters, and static switches. These solid-state devices control the direction of power flow and switch on and off very rapidly allowing for the conversion of power from ac to dc and dc to ac.

(1) Power semiconductor characteristics. A power semiconductor is an electronic device consisting of two layers of silicon wafer with different impurities forming a junction made by diffusion. The joining of these two wafers provides control of the current flow. Referring to figure 2-6, the power semiconductor permits the current to flow in one direction from the anode A to the cathode K, whenever the anode voltage is positive relative to the cathode. When the anode voltage is negative relative to the cathode, the power diode blocks the flow of current from the cathode to the anode. The power semiconductors may be either SCR or transistors. The types of transistors are bipolar transistors, field effect transistors (FET), and insulated gate bipolar transistors (IGBT). The devices most commonly used are the SCRs and the IGBTs. The IGBTs are relatively new and have been gaining in popularity. The IGBTs are significantly more efficient and easier to control than the other power semiconductors. The use of IGBTs has allowed for static UPS as large as 750 kVA without paralleling units.

(2) Single-phase SCR characteristics. An SCR allows for forward flow of current through the device similar to a diode. The SCR differs from a diode in that the SCR will not conduct until a current pulse is received at the gate. Once the SCR is conducting, it will only turn off with the

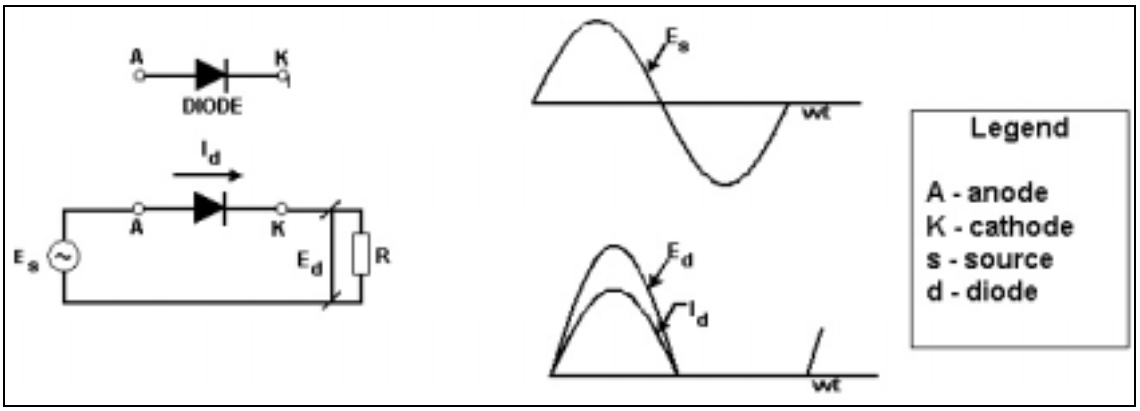

Figure 2-6. Half-wave diode rectifier with resistive load

current falling to zero or through a reverse current being applied. Referring to figure 2-7, the anode voltage is positive relative to the cathode between wt = o and wt = α; the SCR begins conducting when a firing pulse is applied at wt = α. Here, α is called the firing angle. Also, the SCR blocks at wt > π when the anode voltage becomes negative relative to the cathode. The SCR does not conduct again until a firing pulse is reapplied at wt = $2\pi + \alpha$. While turning on the SCR is very efficient, the SCRs require a commutation circuit to turn it off. It is necessary to be able to turn off the device for use in the inverter to generate the ac wave. The turn-off time is slow in comparison to the transistors which are not latching devices. The other drawbacks to the commutation circuit are that it adds more equipment to the circuit, adds audible noise to the unit, and consumes power.

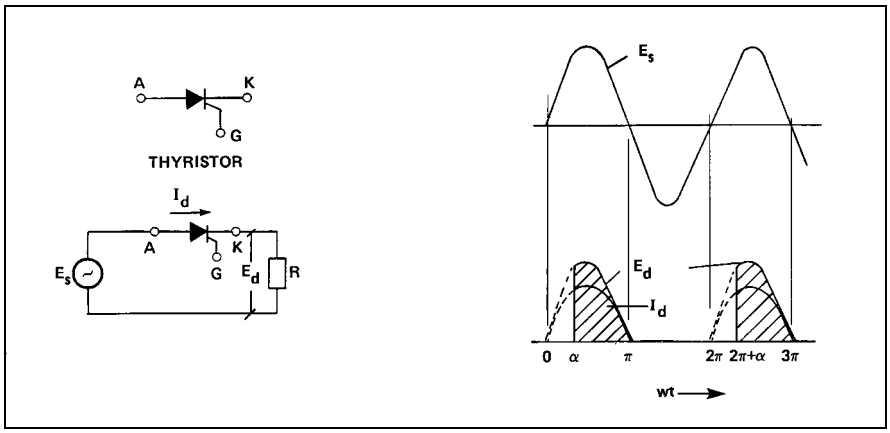

Figure 2-7. Half-wave SCR rectifier with resistive load

(3) Bipolar transistors. Bipolar transistors permit current to flow through the circuit when current is applied to the base. The flow of the power through the device is proportional to the current applied to the base. Unlike SCRs, transistors are not latching. Upon removing the current from the base, the circuit will be turned off. This allows for much quicker switching time than the SCRs. However, bipolar transistors experience high saturation losses during power conduction which requires drive circuits to minimize switching losses.

(4) FET. FETs are turned on and off by applying voltage to the gate. This is more efficient than applying current to the base as done with the bipolar transistors. The FETs experience saturation losses and require drive circuits to minimize the switching losses.

Moreover, the high resistance characteristics of the power conducting portion make this device inefficient and undesirable for large applications.

(5) IGBT. The IGBT combines the desirable characteristics of the bipolar transistor and the FET. Voltage is applied to the base to turn the device on and off and the collector/emitter has low resistance. IGBTs have a greater tolerance to temperature fluctuations than the FETs. The IGBTs have the drawback of saturation losses and switching losses like all of the other transistors. These must be taken into consideration in the designing of the UPS. Overall, the IGBT is more efficient and easier to control than the other power semiconductors.

g. Rectification. Rectification is the conversion of ac power to dc power. Rectification is accomplished by using unidirectional devices such as SCRs or IGBTs. Rectifiers can be built to convert single-phase or three-phase ac power to controlled or uncontrolled dc power. In a controlled rectifier, the output dc voltage can be continuously maintained at any desired level whereas in an uncontrolled rectifier the output dc voltage (at no load) is a fixed ratio of the input ac voltage. Moreover, the output dc voltage of an uncontrolled rectifier varies with the load level due to voltage drops in the various circuit elements. Generally, single-phase rectifiers may be used in ratings up to 5 kilowatt (kW) whereas three-phase rectifiers are used in higher ratings. When controlled dc voltage is required, SCRs are normally used.

(1) Single-phase uncontrolled rectifiers. The two most common configurations of single-phase uncontrolled rectifiers are the center-tap full wave rectifier shown in figure 2-8 and the single-phase bridge rectifier shown in figure 2-9. In the center-tap configuration, each diode conducts every half cycle when the anode voltage is positive relative to the cathode. In the bridge configuration a pair of diodes conducts every half cycle when their anode voltage is positive relative to the cathode. Comparison of the output voltage (E_d) and current wave shapes of the two configurations indicates that they are identical. However, a major difference between the two configurations is that for the same kW output, the center-tap configuration requires a transformer with a higher kVA than the bridge configuration and is more costly. For this and other reasons, the center-tap configuration is used mainly in ratings of less than one kW. Examining the output voltage wave shape for the two configurations indicates that it contains two pulses every cycle. This causes the output voltage, which is the average of these two pulses, to have a high ripple content. Also, comparison of the output current (I_d) wave shape for resistive and inductive loads indicates that with an inductive load, the output current is essentially constant throughout the cycle. Therefore, connecting a large inductor in series with the rectifier output smoothes the output current and minimizes the current ripples.

(2) Three-phase uncontrolled rectifiers. There are numerous possible configurations of three-phase rectifiers. However, the basic building blocks of these configurations are the three-phase single-way and the three-phase bridge rectifier configurations shown in figures 2-10 and 2-11 respectively. Comparison of the output voltage and output current wave shapes indicates that the bridge rectifier output wave shape contains six pulses while the wave shape for the single-way rectifier contains three pulses. This makes the ripple content of the bridge rectifier output less than that of the single-way rectifier. Another important difference is that the required transformer kVA in the single-way configuration is approximately 1.5 times that in the bridge configuration for the same kW output due to the low power factor of the single-way configuration. Normally three-phase rectifiers are used in ratings higher than 5 kW although it may also be used in lower ratings. The bridge rectifier configuration is commonly used in high power applications while the single-way configuration is mostly used in lower ratings. Generally, the selection of one configuration or another is up to the equipment designer and is based on cost considerations.

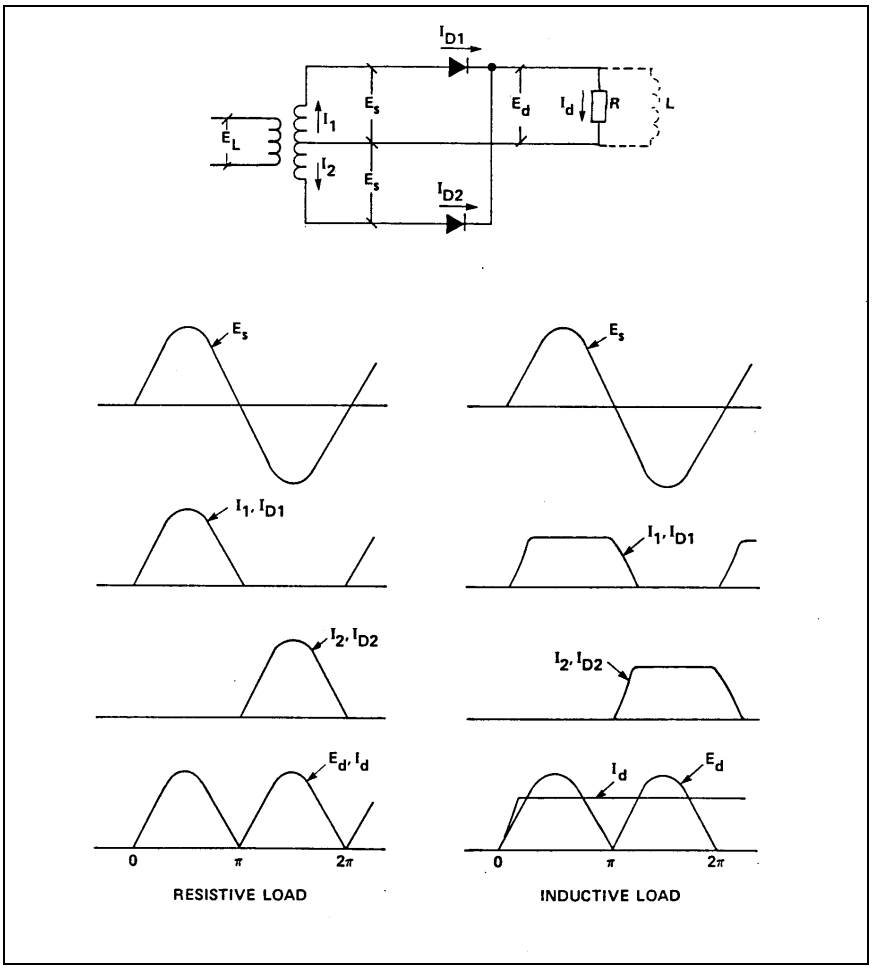

Figure 2-8. Center-tap full-wave uncontrolled rectifier

(3) Controlled rectifiers. In applications where a continuously adjustable dc voltage is desired, controlled rectifiers are used. Controlled rectifiers like the uncontrolled rectifiers can be single-phase or three-phase. The controlled rectifier configurations are identical to the uncontrolled rectifiers, however, in order to control the output dc voltage, SCRs are used in place of the power diodes. The output dc voltage can be controlled at any desired level by changing the firing angle α as discussed in paragraph 2-1f(2). Control by changing the firing angle α is termed "phase control." The voltage is controlled by a feedback loop which senses the output voltage and adjusts the SCRs firing angles to maintain the output at the desired level. The configurations of single-phase and three-phase controlled bridge rectifiers and their wave forms are shown in figures 2-12 and 2-13 respectively. The output dc voltage of rectifiers with resistive-inductive or non-linear loads and the effect of the firing angle α can be determined by circuit analysis techniques for each specific load. The effect of the firing angle α on the magnitude of the output dc voltage is as follows.

(a) Single-phase bridge rectifier with a resistive load. The following equation models the voltage output of the single-phase bridge rectifier with a resistive load.

$$E_{do}(\alpha) = E_{do}\,\frac{(1+\cos\alpha)}{2}$$

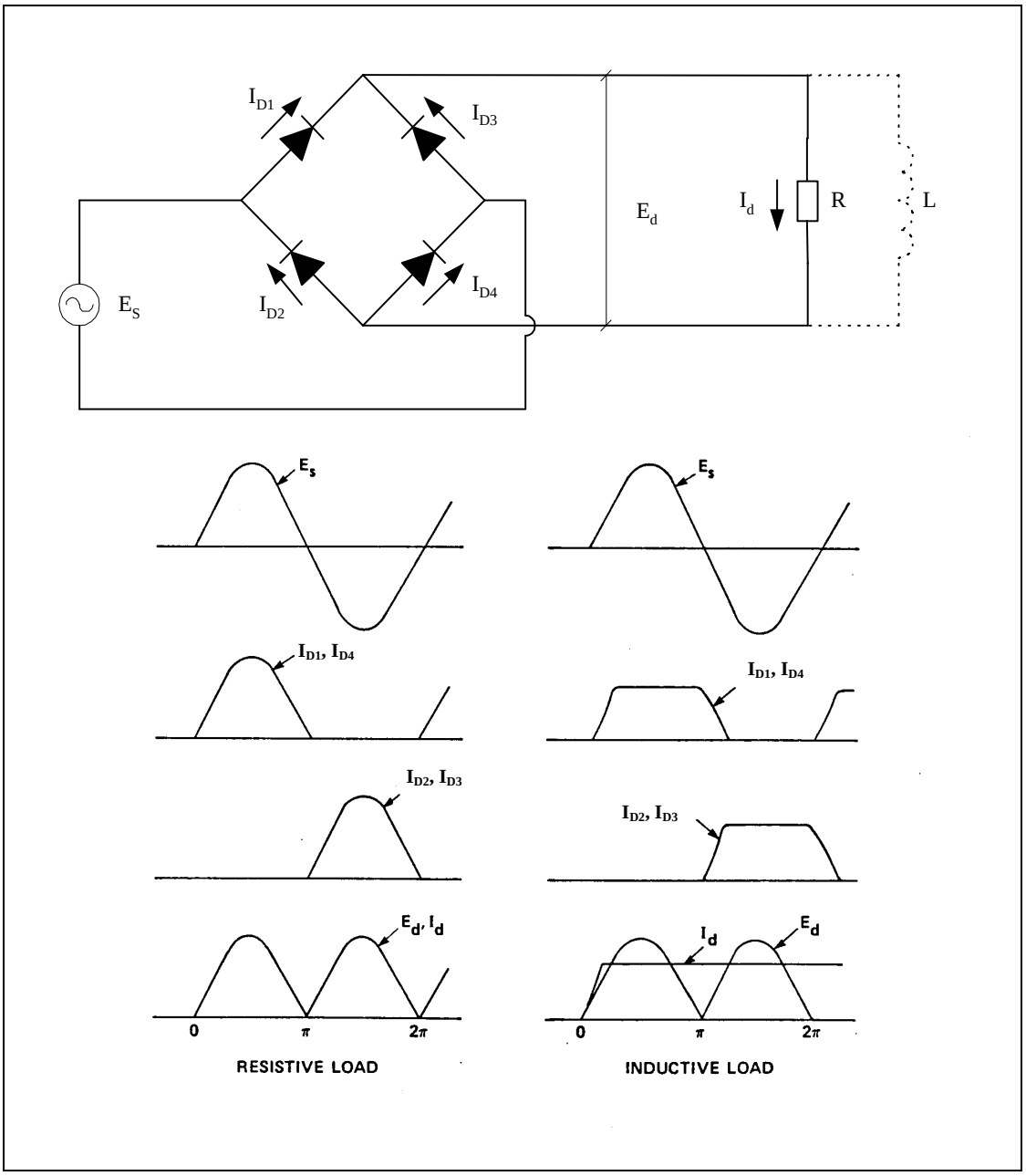

Figure 2-9. Full-wave bridge uncontrolled rectifier

(b) Single-phase bridge rectifier with an inductive load. The following equation models the voltage output of the single-phase bridge rectifier with an inductive load.

$$E_{do}(\alpha) = E_{do} \cos\alpha$$

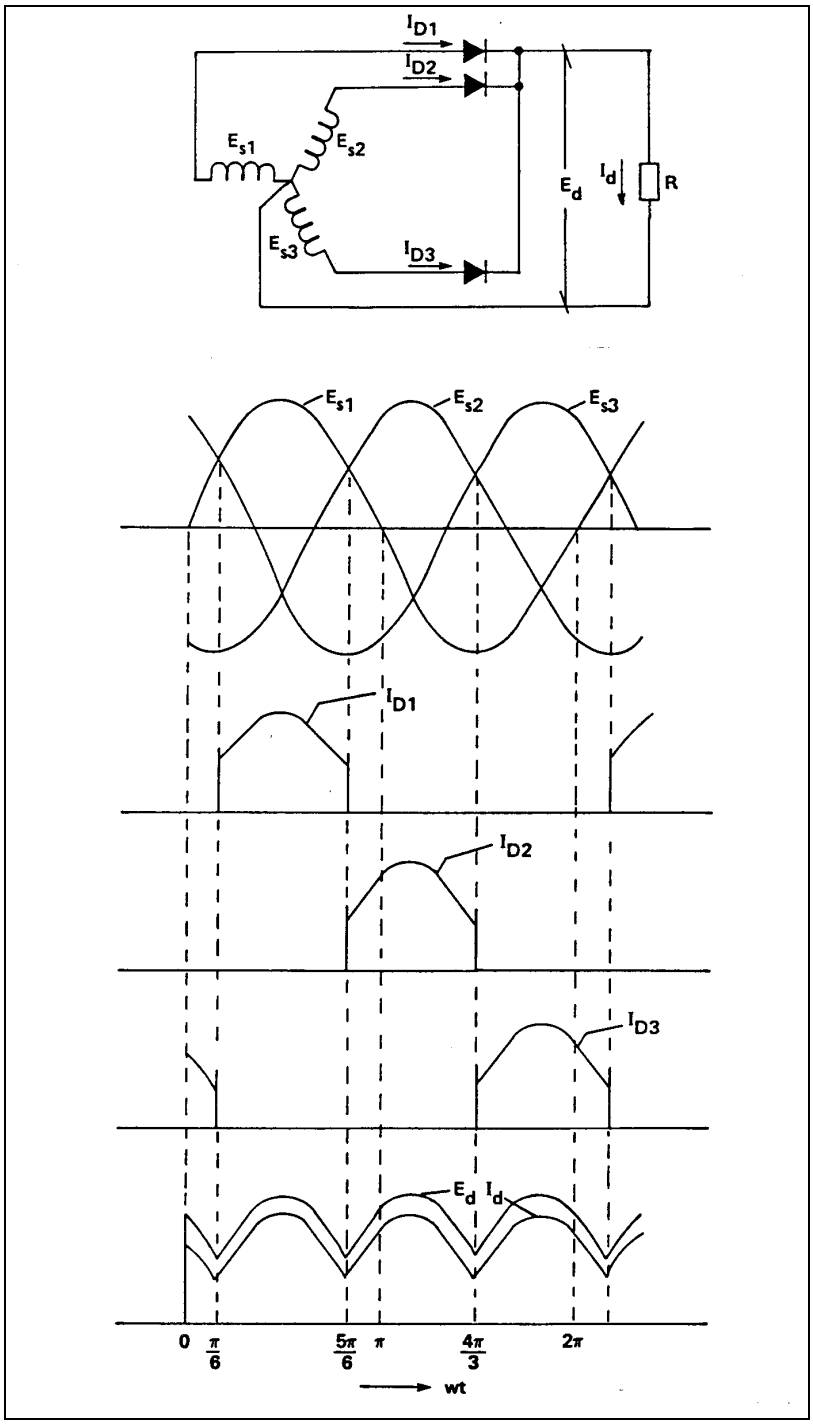

Figure 2-10. Three-phase uncontrolled single-way rectifier

(c) Three-phase bridge rectifier with a resistive load. The following equation models the voltage output of the three-phase bridge rectifier with a resistive load.

$$E_{do}(\alpha) = E_{do}\, 1 - \sin(\alpha - \frac{\Pi}{6})$$

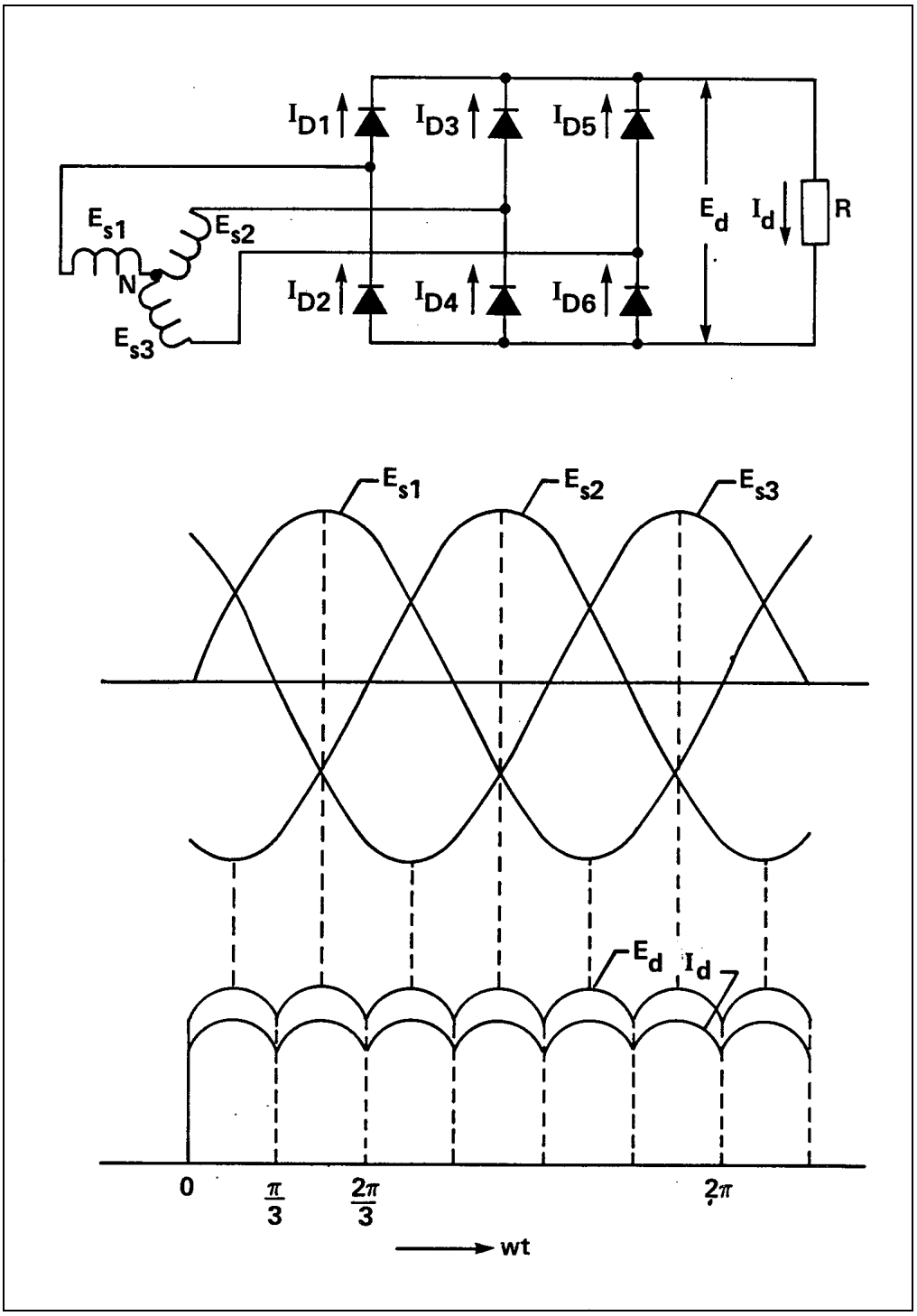

Figure 2-11. Three-phase uncontrolled bridge rectifier

(d) Three-phase bridge rectifier with an inductive load. The following equation models the voltage output of the three-phase bridge rectifier with an inductive load.

$$E_{do}(\alpha) = E_{do} \cos\alpha$$

where: E_{do} = average dc voltage at no load without phase control (neglecting the voltage drop in the circuit elements)

$E_{do}(\alpha)$ = average dc voltage at no load with phase control at firing angle α (neglecting the voltage drop in the circuit elements).

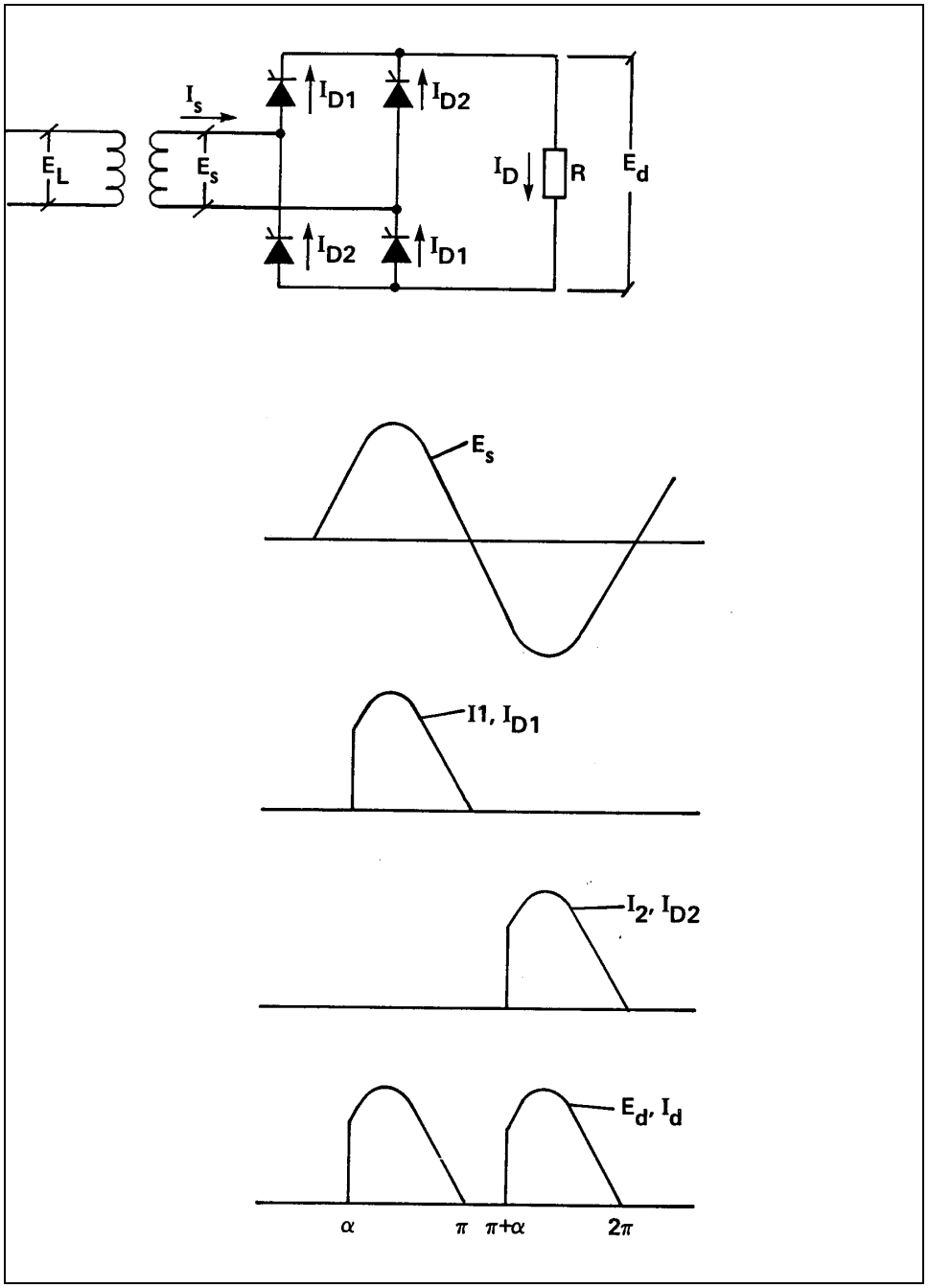

Figure 2-12. Single-phase controlled bridge rectifier

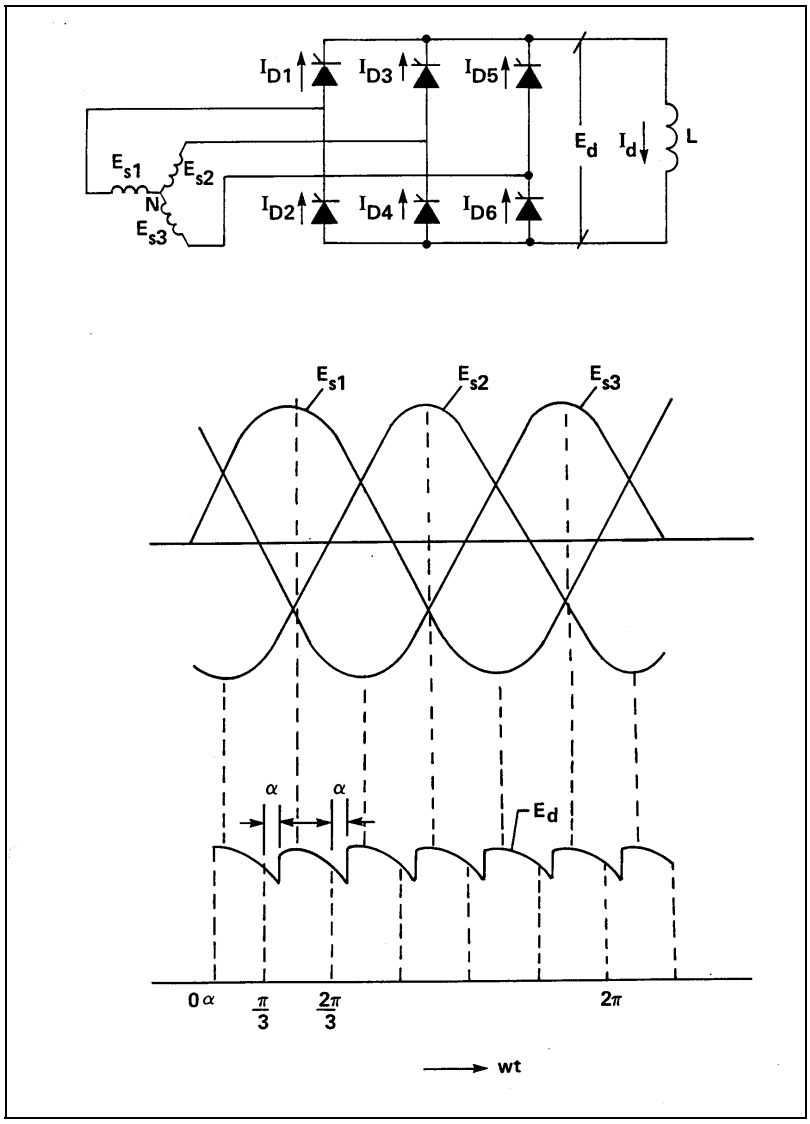

Figure 2-13. Three-phase controlled bridge rectifier

h. Inversion. Inversion is the conversion of dc power to ac power. Inversion can be accomplished using SCRs or IGBTs. In high power applications, IGBTs have been used. Inverters for static UPS systems can be single-phase or three-phase. Single-phase inverters are used in ratings up to approximately 75 kVA; at higher ratings three-phase inverters are used.

(1) Inverter principles. The basic elements of a single-phase inverter are shown in figure 2-14. When SCRs 1 and 4 are turned on while SCRs 2 and 3 are off, a dc voltage appears across the load with the polarity shown in figure 2-14a. After some time interval, if SCRs 1 and 4 are turned off and SCRs 2 and 3 are turned on, a dc voltage appears across the load with opposite polarity as shown in figure 2-14b. If SCRs 2 and 3 are allowed to conduct for the same time interval as SCRs 1 and 4 and then turned off while SCRs 1 and 4 are turned on and the process is

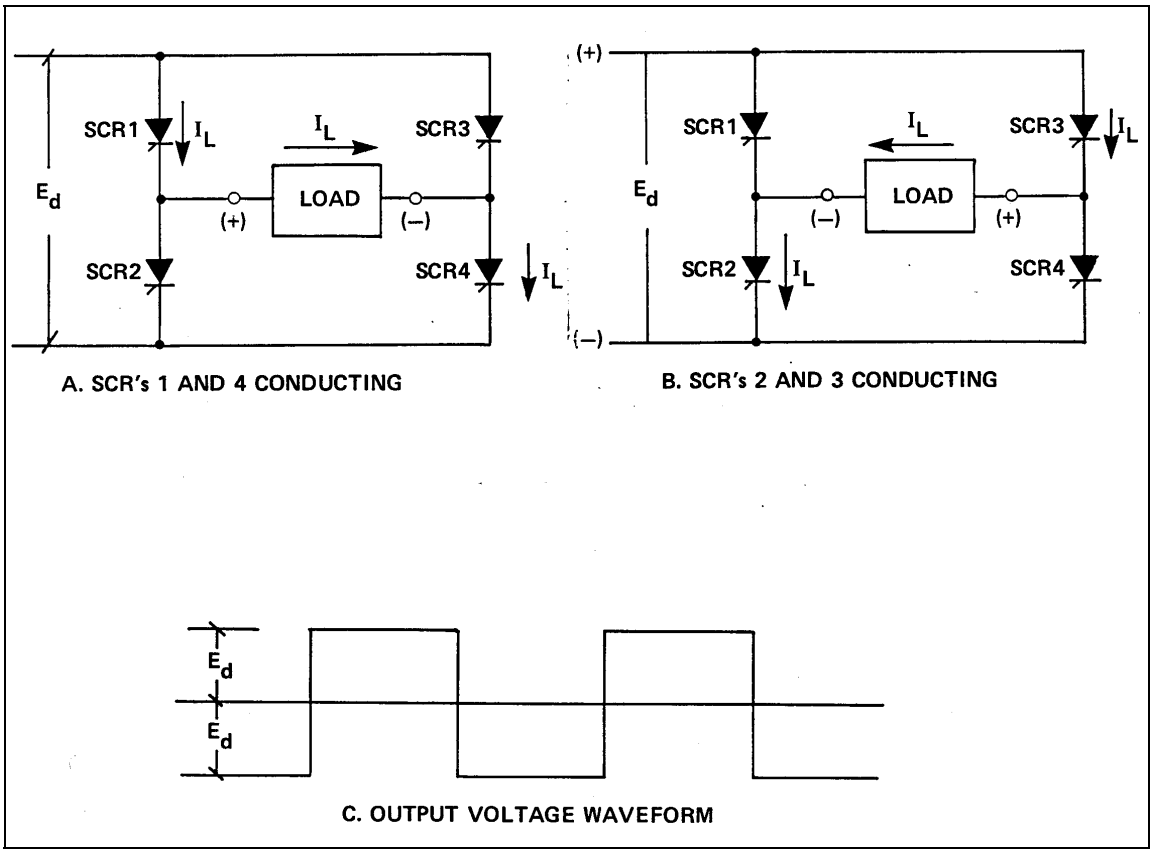

Figure 2-14. Simple single-phase inverter

repeated, an alternating voltage will appear across the load. The wave form of this alternating voltage is as shown in figure 2-14c. Two points must be taken into consideration to make the simple circuit in figure 2-14 of practical importance. As discussed before, once a SCR is turned on it remains conducting until the current drops to nearly zero. In the circuit shown in figure 2-14, once the SCR is turned on, load current flows with magnitude larger than zero. Therefore, some external means are required to cause the current to drop to near zero in order to turn off the SCR. Such means is called a commutating circuit. Generally, all inverters with SCRs require commutation means and normally charged capacitors are used to effect the commutation process. However, when gate turn off (GTO) SCRs or power transistors are used, no commutation circuits are required. GTO SCRs and power transistors can be turned off by gate pulses supplied by low power gating circuits. Commutation circuits are relatively complex and their principles of operation are beyond the scope of this manual. The second point is that in the circuit shown, the load is directly connected to the dc source through the SCRs. This subjects the load to transients generated within the dc system. For this reason, the load is normally isolated from the dc source through the use of an output transformer. Also, the inverter output wave shape is a square wave. This wave shape is not suitable for supplying power sensitive equipment. Therefore, some means are required to condition the inverter output to a sinusoidal waveform.

(2) Inverter voltage control. The common methods of inverter output voltage control are pulse width control, PWM, and use of a ferroresonant transformer. Any of these methods may be used for output voltage control. In some designs a combination of pulse width control and modulation is used. However, a ferroresonant transformer is never used in combination with either of the other two methods. The pulse width control technique has become less common

than the PWM technique and the use of ferroresonant transformers. Also, some manufacturers advocate the use of PWM while others favor the use of ferroresonant transformers. Although each method may have some advantages over the others, the voltage control method is normally not specified when specifying UPS systems. Either type may be used provided it meets the performance requirements.

(a) Pulse width control. To illustrate this technique, the circuit in figure 2-14 is redrawn in figure 2-15. Referring to this figure, when each of the two SCR pairs (1, 4 and 2, 3) is gated for a time interval equal to a half cycle without the two pairs conducting simultaneously, the output voltage waveform is as in figure 2-15b. If the gating of SCR pair 2, 3 is retarded by a

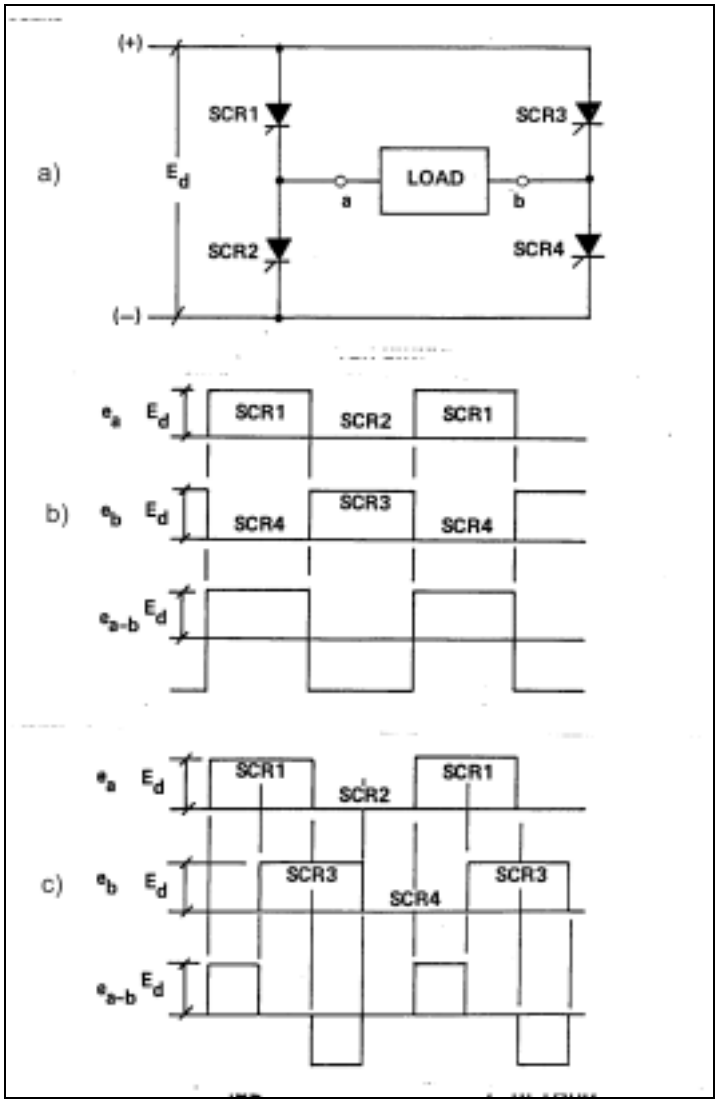

Figure 2-15. Voltage control using pulse width control

quarter of a cycle, the output voltage waveform is as in figure 2-15c. Therefore, the inverter output voltage can be continuously adjusted by retarding the firing signal of one pair of SCRs with respect to the other. The magnitude of the fundamental component of the output voltage depends on the pulse width and is higher for a wider pulse. The maximum output voltage is

obtained with no retard; zero voltage is obtained when the firing signal is retarded by a half cycle. The voltage control is accomplished by a feedback control loop which senses the output voltage and adjusts the SCRs' firing angles to increase or reduce the output voltage level. With the pulse width control technique, the output voltage harmonic content is high and a harmonic filtering means is required.

(b) PWM. In this technique, the inverter SCR pairs are switched on and off many times every half cycle to provide a train of pulses of constant amplitude and different widths. The output voltage is synthesized from this train of pulses as shown in figure 2-16. The output voltage level can be controlled by varying the width of the pulses. By this technique the output voltage wave shape can be made to closely approximate a sine wave. Also, it is feasible to eliminate all harmonics by the use of this technique. This eliminates the use of output filters. Inverters using this technique have lower impedance and faster transient response. The control is accomplished by feedback control as in the pulse width control technique.

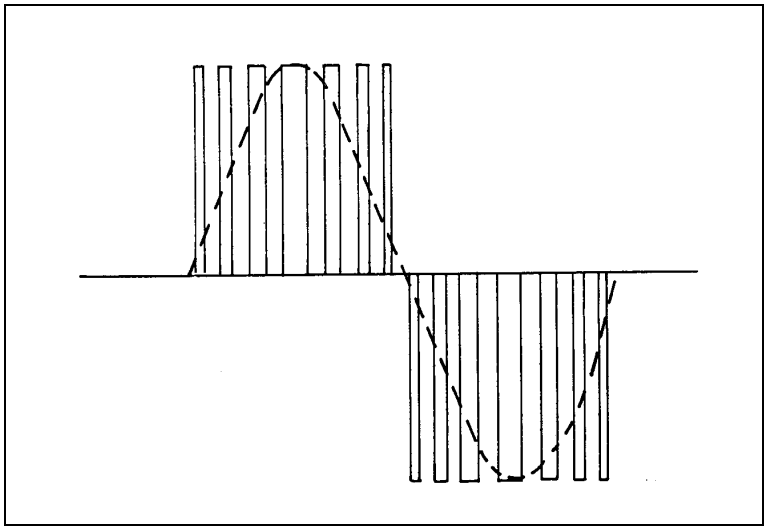

Figure 2-16. Pulse width modulation (PWM)

(c) Use of a ferroresonant transformer. A ferroresonant transformer connected across the inverter's output can be used to regulate the output voltage and reduce its harmonic content. The ferroresonant transformer is basically a two-winding transformer with an additional small secondary compensating winding and a series low pass filter connected across part of the main secondary winding as shown in figure 2-17. The filter presents a low impedance to the lower order harmonics and reduces their amplitude in the output to a low acceptable value. The compensating winding voltage is added to the secondary output voltage 180° out-of-phase thus maintaining the output voltage within a narrow regulation band. However, with the use of a ferroresonant transformer, the output voltage is not continuously adjustable as in the previous techniques.

(3) Three-phase inverters. Three-phase inverters are commonly made up of three single-phase inverters connected to the same dc supply, as shown in figure 2-18. The secondaries of the three single-phase inverter output transformers are connected in wye configuration. To generate a three-phase output, the firing signals for phase B inverter SCRs are delayed 120° from those of phase A inverter. Similarly the firing signals for phase C inverter SCRs are delayed 120° from

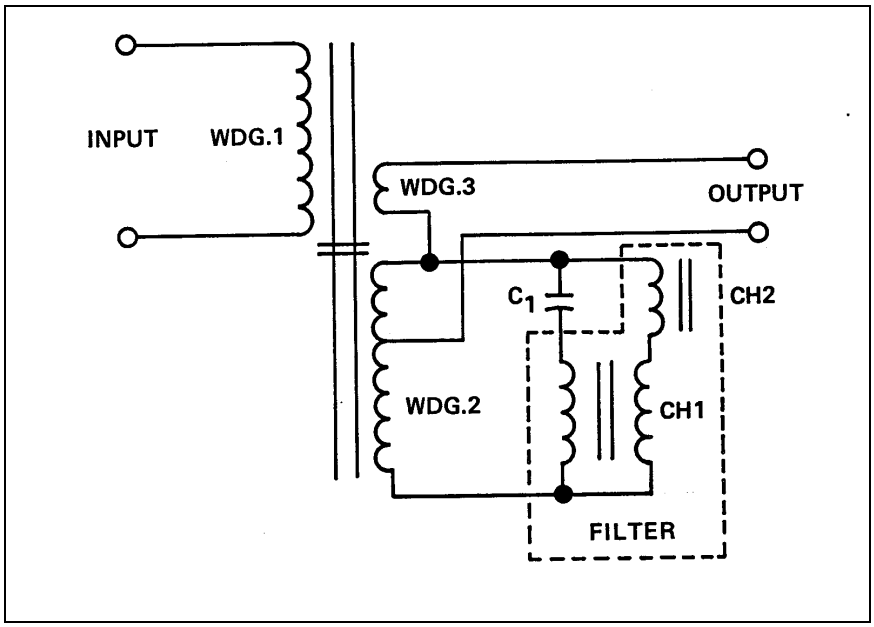

Figure 2 -17. Ferroresonant transformer

those of phase B inverter. The resulting phase-to-neutral voltages for 180° pulses and the line-to-line secondary voltages are shown in figure 2-18, where:

$$E_{A-B} = E_{A-N} - E_{B-N}$$
$$E_{B-C} = E_{B-N} - E_{C-N}$$
$$E_{C-A} = E_{C-N} - E_{A-N}$$

In this case as with the single-phase inverter, the output wave shape is a square wave and means for conditioning the output to a sinusoidal waveform is required. The three-phase inverter output voltage control can be accomplished by the same techniques used for single-phase inverters. However, the use of ferroresonant transformers is not feasible in many three-phase applications. This is due to the fact that a slight load current unbalance can cause substantial phase shifts in the ferroresonant transformers output voltages. With substantial voltage phase shift, the three line to neutral voltages may have the same magnitude but the line-to-line voltages may be extremely unbalanced. However, PWM technique can also be used as in the case of single-phase inverters.

i. Static transfer switch. A static transfer switch, like an electromechanical transfer switch, is used to transfer loads from one power source to another, manually or automatically. However, unlike an electromechanical transfer switch, the static transfer switch total transfer time is in the order of one fourth of a cycle which will provide power to the loads without interruption.

(1) Design. As shown in figure 2-19, a single-phase static transfer switch consists of two pairs of SCRs. Each pair is connected in antiparallel arrangement, i.e., the anode of one SCR is connected to the cathode of the other. By this arrangement, each SCR in the pair can be made to conduct every other half cycle. One pair of SCRs is connected between the load and each of the two sources. The logic circuit applies firing signals to either pair of SCRs.

(a) Operation. Applying a firing signal to source No. 1 SCRs causes them to conduct and power flows from source No. 1 through the SCRs to the load. To transfer the load to source

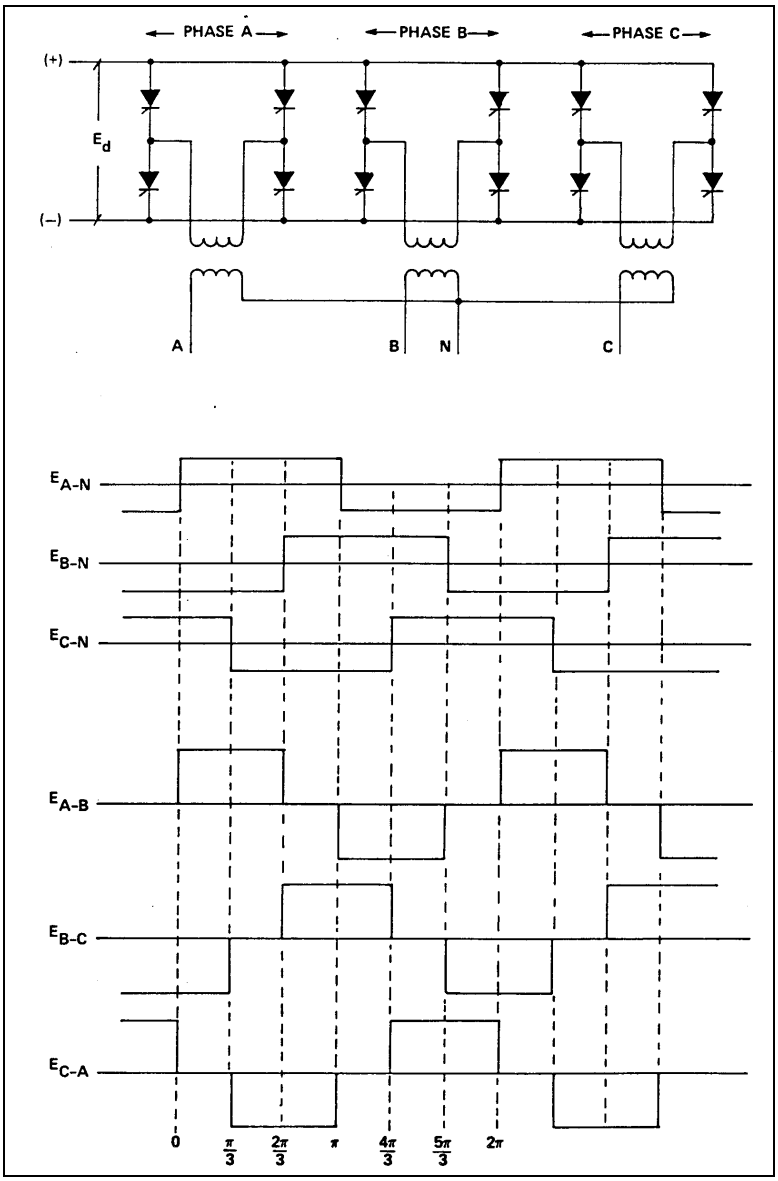

Figure 2-18. Three-phase inverter

No. 2, the firing signals are transferred from source No. 1 SCRs to source No. 2 SCRs. This causes source No. 2 SCRs to conduct and source No. 1 SCRs to block when the SCR anode voltage reaches zero. By causing source No. 2 SCRs to conduct and source No. 1 SCRs to block, power flows from source No. 2 through the SCRs to the load during the transfer, the two sources are paralleled momentarily until source No. 1 SCRs reach the blocking state and the transfer is in a "make-before-break" mode.

(b) Initiation. The transfer process can be initiated manually or automatically through the sensing and logic circuit. This circuit senses the voltage and frequency of both sources and checks their synchronism. When the connected source voltage and/or frequency deviate from the required level, the sensing and logic circuit initiates transfer to the other source provided its voltage and frequency are within allowable tolerances. The transfer is normally initiated after a short time delay to avoid unnecessary transfers during transients.

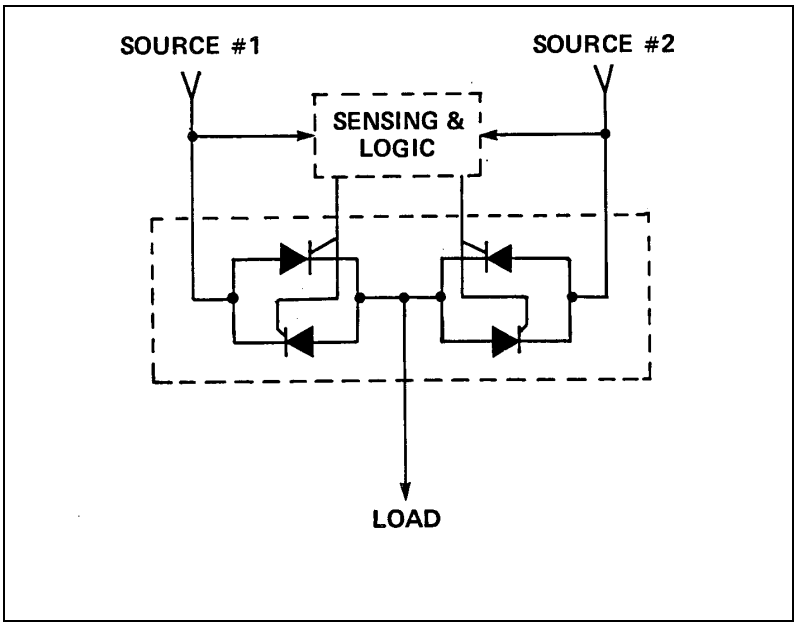

Figure 2-19. Single-phase static transfer switch

(c) Three-phase static switch. A three-phase static transfer switch consists of three single-phase switches. However, only one common sensing and logic circuit is used to monitor the frequency and voltages of the three phases. A voltage deviation in any phase initiates the transfer. Otherwise, operation is the same as the single-phase switch operation.

(2) Static transfer switches with short time rating. The static transfer switch discussed in paragraph 2-1i. above is capable of transferring and carrying the full load current continuously. In some designs, particularly larger ratings, a static transfer switch with short time rating is used in conjunction with a circuit breaker connected in parallel at the bypass source. In this arrangement the static transfer switch is not rated to carry the load current continuously; it can carry the full load current for a duration of less than one second. The static switch is used to affect fast transfer and to carry the load current for the duration required to close the motor operated circuit breaker which is in the order of several cycles. Once the circuit breaker closes, it carries the load current and relieves the static transfer switch. This configuration is comparable to the fully rated static transfer switch. However, it has a lower reliability due to the higher failure rate of motor operated circuit breakers. It is used mainly for economic reasons in lower cost systems.

j. Batteries. A battery is used in a static UPS system to provide reliable emergency dc power instantaneously to the inverter when the normal power fails or degrades. Of the many available battery types, the following two basic types are generally used in static UPS systems, namely, the lead-acid and the nickel-cadmium (ni-cad) batteries.

(1) Lead-acid batteries. A lead-acid battery cell consists basically of a sponge lead negative electrode, a lead dioxide positive electrode, and a sulfuric acid solution as an electrolyte. As the cell discharges, the active materials of both positive and negative electrodes are converted to lead sulphate and the electrolyte produces water. On charge, the reverse action takes place. At the end of the charging process, water electrolysis occurs producing hydrogen at the negative electrode and oxygen at the positive electrode.

(a) Lead-acid design. The most common design of lead-acid batteries is the lead-calcium cell construction where the active material for each electrode is prepared as a paste spread onto a lead-calcium alloy grid. The grid provides the electrical conductivity and structure to hold the active materials. The resultant plates are soldered to connecting straps to form positive and negative groups which are interleaved. Separators are placed between the plates and the assembly is placed in a container or jar. These batteries can survive more short duration, shallow cycles than long duration, deep discharge cycles.

(b) Voltage. The nominal voltage of a lead-acid cell is 2 volts while the open circuit voltage is approximately 2.05 volts. A commonly used end or discharged voltage is 1.75 volts. However, lower end voltages are also possible. The electrolyte specific gravity with the cell fully charged can range from a nominal 1.210 to 1.300 at a temperature of 25°C (77°F).

(c) Rate design. The batteries may be of the high rate, medium rate, or low rate design. The high rate batteries are designed to deliver a large amount of current over a short amount of time of approximately 15 minutes. This is achieved by designing the batteries with thin plates. This design is most common for UPS applications. The medium rate batteries are designed for general use. They deliver a medium amount of current over a medium amount of time of approximately 1 to 3 hours. The design consists of medium width plates. This design is most common with switchgear and control applications. The low rate batteries are designed for delivery of power over a long amount of time of approximately 8 hours. The battery design consists of thicker plates. This design is most common for applications such as emergency lighting and telecommunications.

(d) Vented (flooded) lead-acid battery. Vented (flooded) lead-acid cells are constructed with the liquid electrolyte completely covering the closely spaced plates. The electrolyte maintains uniform contact with the plates. These batteries require regular maintenance of checking the specific gravity of the electrolyte and adding water. These batteries are well suited for industrial applications due to the long lifetime (20 years) and high reliability with the proper maintenance. Without the proper maintenance, the lifetime of the battery could be greatly reduced. These batteries are approximately half the cost of ni-cad batteries. These are the most commonly used batteries for industrial application UPSs.

(e) Valve regulated lead-acid (VRLA) batteries. The VRLA batteries are sealed with a valve allowing venting on excessive internal pressure. These cells provide a means for recombination of the internally generated oxygen and suppression of hydrogen gas evolution to reduce the need for adding water. This design does not require the maintenance of checking the specific gravity and adding electrolyte as does the flooded lead-acid batteries. These batteries have a lifetime of approximately 5 to 6 years. This is substantially shorter than the 20 year lifetime of the flooded lead-acid and the ni-cad designs. These batteries would need to replaced 3 to 4 times to provide the same service of the flooded lead-acid and ni-cad designs. These units sometimes experience failures called “sudden death failures” where deposits form on the plates causing a short. This type of failure is difficult to detect and makes this battery less reliable than the flooded lead-acid design and the ni-cad design. The VRLA batteries cost approximately half of the price of the flooded lead-acid batteries and one fourth of the price of the ni-cad batteries. These units are well suited for UPS systems providing back up to computer systems because of their low maintenance, low cost, and low emissions. For industrial applications requiring greater reliability and longer life the flooded lead-acid and ni-cad designs are preferred.

(2) Ni-cad batteries. Stationary ni-cad batteries designed for emergency power applications are being used in static UPS systems. These batteries have a long lifetime of 25

years. However, because of their initial cost their use is not as common as the flooded lead-acid type.

(a) Ni-cad design. The ni-cad battery cell consists basically of a nickel hydroxide positive electrode, a cadmium hydroxide negative electrode, and a potassium hydroxide solution as an electrolyte. As the cell discharges, the nickel oxide of the negative electrode is changed to a different form of oxide and the nickel of the positive electrode is oxidized. On charge the reverse action takes place. Also, hydrogen and oxygen are evolved by the positive and negative electrodes, respectively, as the cell reaches full charge. However there is little or no change in the electrolyte's specific gravity.

(b) Ni-cad voltage. The nominal voltage of a ni-cad cell is 1.2 volts while the open circuit voltage is 1.4 volts. The electrolyte specific gravity is approximately 1.180 at a temperature of 25°C (77°F).

(c) Ni-cad rate design. Ni-cad batteries are also available in one of three designs of high, medium, or low rate power delivery. The high rate batteries are the most commonly used in the application of UPS systems.

(d) Advantages. These batteries are resistant to mechanical and electrical abuse. They operate well over a wide temperature range of –20°C to 50°C. Also, they can tolerate a complete discharge with little damage to the capacity of the battery.

(3) Lead-acid vs. ni-cad batteries. Lead-acid batteries are about 50 percent less expensive than an equivalent ni-cad battery; the ni-cad batteries exhibit a longer life and a more rugged construction. Also the ni-cad battery requires less maintenance than a lead-calcium battery. However, a ni-cad battery requires approximately 53 percent more cells than a lead-acid battery at the same voltage. Lead-acid batteries are more susceptible to high temperature than ni-cad batteries. The life of a lead-acid battery is reduced by 50 percent for every 15°F increase in electrolyte temperature while a ni-cad battery loses approximately 15 percent of its life. It should also be noted that lead-acid batteries release more hydrogen during recharging than ni-cad batteries.

k. Battery charging. During initial operation, the battery requires charging. During normal operation, local chemical reactions within the cell plates cause losses that reduce the battery capacity if not replenished. Also, these local chemical reactions within the different cells occur at varying rates. In lead-acid batteries these local reactions over long periods of time cause unequal state-of-charge at the different cells. In addition, it is required to recharge the battery following a discharge. Therefore, the battery charger should provide the initial charge, replenish the local losses to maintain the battery capacity, equalize the individual (lead-acid) cells state-of-charge, and recharge the battery following discharge. In stationary applications such as static UPS systems, the battery is continually connected to the charger and the load and the battery is float charged. During float charging the battery charger maintains a constant dc voltage that feeds enough current through the battery cells (while supplying the continuous load) to replenish local losses and to replace discharge losses taken by load pulses exceeding the charger's current rating. Periodically the charger voltage is set at a level 10 percent higher than the floating voltage to restore equal state-of-charge at the individual (lead-acid) cells. This mode of charging is called “equalizing charge” and the charger voltage level during this mode is the equalizing voltage. Following the battery discharge, the charger is set at the equalizing voltage to recharge the battery. The charger is set at this higher voltage to drive a higher charging current to recharge the battery in a reasonably short time and to restore it to the fully charged state. Although a periodic

equalizing charge is not required for equalizing ni-cad cells, a charger with float/equalize mode is required. At the floating voltage level, the ni-cad cell cannot be charged over 85 percent of its full capacity. Therefore, the equalizing voltage level is required to fully recharge the cell after successive discharges.

l. Service life influences. Service life as reported by battery manufacturers is greatly influenced by temperature considerations. Battery manufacturers are finding that the type and number of discharge cycles can reduce life expectancy when installed for the high-current, short period, full discharges of UPS applications. Characteristics of expected life and full discharge capabilities of various types of UPS batteries are given in table 2-1. An explanation of the relationship of battery life to battery capacity, of the basis for battery sizing, and of the effects of battery cycling is considered necessary to impress on maintenance personnel why continual maintenance, data reporting is so important in fulfilling warranty policy requirements. Operating characteristics of the overall system such as charging/discharging considerations, ripple current contribution, and memory effect also can lead to a diminishment in expected battery performance.

Table 2-1. Characteristics of UPS battery types

Battery Type	Typical Warranty Period	Typical Expected Life	Approximate Number of Full Discharges
Lead-acid antimony, flooded electrolyte	15 years	15 years	1,000-12,000
Lead-acid calcium, flooded electrolyte	20 years	20 years	100
Lead-acid/calcium gelled electrolyte, valve-regulated	2 years	5 years	100
Lead-acid/calcium suspended electrolyte, valve-regulated	1 - 10 years	5 - 12 years	100-200
Lead-acid special alloy suspended electrolyte, valve-regulated	14 years	14 years	200-300
Lead-acid/pure starved electrolyte, valve-regulated	1 year	5 - 20 years	150
Ni-cad, flooded electrolyte	20 - 25 years	25 years	1,000-1,200

(1) Voltage tapping. Sometimes the UPS system will require one dc voltage level while electrical operation of circuit breakers will require another dc voltage level. Tapping off of the higher-voltage battery is not permitted. Unequal loads on the battery will reduce the battery's life since it causes one portion of the battery to be undercharged while the other portion is overcharged. Battery and UPS manufacturers both often indicate that such practices invalidate their warranties.

(2) Cycling effects. A cycle service is defined as a battery discharge followed by a complete recharge. A deep or full cycle discharge/recharge consists of the removal and replacement of 80 percent or more of the cell's design capacity. Cycling itself is the repeated charge/discharge actions of the battery. A momentary loss of power can transfer the UPS to the battery system and impose a discharge on the battery for the time period needed by the UPS to determine whether the ac power input has returned to acceptability. As we see an increase in non-linear loads, we may expect to see more frequent cycling. As indicated in table 2-1, the ability of flooded lead-acid batteries utilizing a lead-antimony alloy to provide the greatest number of full discharges. Ni-cad batteries have a good cycle life, but their increased cost does not encourage their use in large installations. Valve-regulated batteries have low-cycle capabilities because each recharge means a possibility of some gassing, resulting in the ultimate failure of the cell when it eventually dries out.

(3) Charging/discharging considerations. A battery cannot function without a charger to provide its original and replacement energy. A well designed charger will act to charge a discharged battery by maintaining the correct balance between overcharging and undercharging so as not to damage the battery. Additionally, the charger must assure that battery discharging is limited to the point where the cells approach exhaustion or where the voltage falls below a useful level (usually about 80 percent of the battery's rated capacity). Overcharging results in increased water use, and over discharging tends to raise the temperature, which may cause permanent damage if done frequently.

(a) Current flow. Batteries are connected to the charger so that the two voltages oppose each other, positive of battery to positive of charger and negative to negative. Battery current flow is the result of the difference between the battery and the charger voltages and the battery's extremely low opposing resistance. The voltage of the battery rises during charging, further opposing current flow. Chargers are designed to limit starting charging currents to values that keep equipment within a reasonable size and cost. They must also maintain a sufficiently high current throughout charging so that at least 95 percent of the complete storage capacity is replaced within an acceptable time period. This recharge time may range from 5 to 24 times the reserve period (for a 15 minute reserve period with a 10 times recharge capability the recharge period would be 2.5 hours).

(b) Voltage action. Providing the precise amount of charge on each and every cell for each and every recharge is impracticable for a continuously floating battery operation. The float-voltage point should just overcome the battery's self-discharge rate and cause the least amount of corrosion and gassing. Ambient temperature differences will affect the charging ability of the selected float-voltage level. Overcharge, undercharge, and float voltage levels differ, depending upon the type of cell used.

(c) Lead-acid cells. The usual recommended float voltage for UPS applications is 2.20 to 2.30 volts per cell depending upon the electrolyte's specific gravity. The excess energy of higher float voltages results in loss of water, cell gassing, accelerated corrosion, and shorter cell life. To eliminate such actions, the charge is stopped slightly short of a fully-charged condition on daily or frequent discharges. However, permissible cell manufacturing tolerances and ambient temperature effects will cause individual cell-charge variations. Sulphation will take place and not be reconverted upon recharge, since the charge is insufficient to draw all the acid from the plates. The sulphate may start to crystallize and be shed from the plate. To prevent this, an "equalizing" charge is given for a selected time period to provide a complete recharge on all cells. However, excessive equalizing charges will have an adverse effect on battery life. Automatic equalizing after a discharge may require less maintenance time but may affect battery life. Equalizing charges on a periodic basis are not recommended but should follow the manufacturer's guidelines. Equalizing charging should be considered a corrective action rather than routine maintenance. Periodic equalizing charges can be considered as treating a possible problem before determining that there is a problem.

(d) Ni-cad cells. The usual recommended float voltage for UPS applications is 1.38 to 1.47 volts per cell depending upon the manufacturer's recommendation. Overcharge, as such, may cause no harm to the battery although there will be water loss. The current rate used for charging, though, could produce a damaging heating effect during any appreciable overcharge. Equalizing is not as important for this type of battery, but may be recommended to assist in electrolyte mixing after addition of water.

(4) Ripple currents. UPS applications can place unusual load conditions on a battery, and one condition that increases the rate of battery breakdown is ripple current. Ripple current is caused by the ripple voltage of the battery charger output and by the pulsating current requirements of the inverter. The UPS battery design strives for excellent short-term, high-rate, current characteristics and this demands the lowest possible internal cell resistance. This low resistance can serve as a better short circuit path for the ripple voltages coming out of the rectifier stage of the UPS than can the filter capacitors in the output rectifier. Also, the inverter stage of the UPS demands large instantaneous dc currents as it builds ac power from the parallel rectifier/battery combination. If the UPS is located some distance from the commercial ac power source, the short-term instantaneous currents must then come from the battery. These factors can result in a relatively high ac component in the UPS battery. The relative detrimental effects of ripple current on the battery are mainly a function of the design of the UPS, the comparative size of the battery as compared to the UPS rating, and the battery type. Ripple current tends to heat the batteries and is equivalent to constantly discharging and recharging the battery a tiny amount. Ni-cad cells can be adversely affected by ripple currents although they provide a very good filtering capability. Lead, being much softer than nickel, requires different plate construction techniques which make lead-acid batteries even more susceptible to harmful effects from ripple currents. Usually ripple currents of less than 5 percent over the allowable continuous input range of the battery will not be harmful to lead-acid batteries. A lead-acid battery operated on a high-ripple current input at an elevated temperature can have its operating life reduced to one quarter of what would normally be expected.

(5) Memory effect. Ni-cad cells charged at very low rates are subject to a condition known as a "memory effect." Shallow cycling repeated to approximately the same depth of discharge leads to continual low-rate charging. The result is a battery action which has reduced the effective reserve time of the UPS system. An affected cell can have the memory effect erased by providing a complete discharge followed by a full charge with constant current which breaks up the crystalline growth on the plates.

m. Effects of loads on static UPS systems. Linear loads present a constant load impedance to the power source. This type of load results in a constant voltage drop. However, non-linear loads draw non-sinusoidal current resulting in a non-sinusoidal voltage drop. Non-linear loads and loads with high inrush current demand could adversely affect the static UPS system performance.

(1) Non-linear loads. Non-linear loads are loads whose current is not proportional to the supply voltage such as loads with ferroresonant transformers or regulating transformers and solid-state power supplies. Non-linear loads distort the inverter output voltage wave shape and cause the output voltage to contain high harmonic content. This effect can be more pronounced in inverters with high impedance such as inverters with pulse width control technique and inverters with a ferroresonant output transformer.

(2) Loads with high inrush current. Loads such as motors, transformers, incandescent lamps, etc., draw a high initial current when energized. The high initial current for such loads could be as high as 10 times the normal full load current. Therefore, loads with high inrush current requirements should not be energized simultaneously otherwise the inverter may reach the current limit point.

n. Effect of static UPS system on power supply system. The battery charger within the static UPS is a controlled rectifier which draws non-sinusoidal currents from the power source. The ac line current drawn is basically a square wave or a stepped wave depending on the charger design. This square or stepped wave can be analyzed into an equivalent sinusoidal wave of the power

frequency (i.e., the fundamental component) plus other sinusoidal waves of higher frequencies or harmonics. These harmonic currents cause harmonic voltage drops in the power source impedance. This results in power source voltage distortion and the flow of harmonic currents in the power system components and loads. The degree of power source voltage distortion increases with the static UPS system capacity as well as the power source equivalent impedance. The flow of harmonic currents in the power system can cause resonance and additional losses and heating in the power source's components and loads. Normally, a static UPS system does not have detrimental effects on the power supply system. However, when the static UPS system capacity is close to 20 percent of the supply system capacity, the harmonic effects should be analyzed. The effect of the UPS generated harmonics on the power source and other supplied equipment can be minimized when necessary. The use of a 12- (or more) pulse rectifier reduces the harmonic currents generated. The harmonic currents present in input current to a typical rectifier in per-unit of the fundamental current are as shown in table 2-2. However, the rectifier number of pulses is an equipment specific design parameter that is not normally specified by the user. Should the UPS generated harmonics become a problem and affect other loads supplied from the same bus as the UPS, harmonic filters at the UPS input may be used. Harmonic filters filter out the harmonic currents and minimize the voltage distortion and its effects on harmonic susceptible equipment.

Table 2-2. Harmonic currents present in input current to a typical rectifier in per-unit of the fundamental current

Converter				**Harmonic Order**				
Pulses	**5**	**7**	**11**	**13**	**17**	**19**	**23**	**25**
6	0.175	0.11	0.045	0.029	0.015	0.010	0.009	0.008
12	0.026	0.016	0.045	0.029	0.002	0.001	0.009	0.008
18	0.026	0.016	0.007	0.004	0.015	0.010	0.001	0.001
24	0.026	0.016	0.007	0.004	0.002	0.001	0.009	0.008

From IEEE Std 519-1981. Copyright © 1981 IEEE. All rights reserved.

(1) Magnitude of harmonic effects. Systems with low impedances such as a large power system will be less sensitive to the harmonic distortion from the non-linear UPS load than an engine-generator source whose rating is close to that of the UPS. Sources with a high impedance in relation to the load are known as "soft" power sources when they are unable to absorb the generated distortion of their critical load; that is, the source voltage waveform can be greatly deformed by the critical load waveform. It is difficult for the UPS to attenuate load produced noise. A very noisy or extremely non-linear load may reflect current distortions via the UPS input onto the source. Any interposed soft source may interact with this load to increase rather than reduce critical load power disturbances. So non-linear loads on the UPS can actually distort the "clean" power the UPS is designed to provide by their load-induced current harmonics. Most UPSs provide an input current distortion which meets or is less than the Information Technology Industry Council (ITIC) [formerly called Computer Business Equipment Manufacturers Association (CBEMA)] recommendations. To maintain required power quality to other loads served by the UPS source, ITIC advocates an input having a total reflected current harmonic distortion (THD) of 5 percent or less of line-to-line distortion with a maximum of 3 percent for any one harmonic order. Total distortion is the vector sum of individual harmonic frequency distortions. UPS manufacturers typically guarantee that this distortion holds when the UPS supplies linear loads. A UPS sized for the addition of future loads may be in trouble if the future loads have high harmonic contents. All manufacturers of electronic equipment install line filters

to meet the Federal Communications Commission's (FCC) requirements for radio frequency limits. They do not necessarily provide them for reducing power-line harmonics since this adds to equipment costs. Electronic load-induced distortion beyond the UPS limitations can be deduced if adverse effects occur under maximum loads but not under lesser loads. As the UPS impedance increases in relation to the lower loads, this may reduce the distortion to limits which can be handled by the UPS. Experience has shown that while distortion in excess of the UPS manufacturer's specified limits may not operate protective circuitry, such excess distortion will probably result in increased heating and possible reduction in equipment life.

(2) Problems from harmonics. Harmonic voltages and currents resulting from non-linear loads have caused operating problems, equipment failures, and fires. Harmonics cause increased heating, lower the power factor, change crest factors, increase zero crossing points, provide noise feedback, and influence inductive and capacitive reactance. An understanding of harmonic behavior helps to recognize actions which adversely influence the overall electrical systems.

(3) Neutral harmonic behavior. Harmonics are integral multiples of the fundamental power [60 hertz (Hz)] frequency. Odd-order harmonics are additive in the common neutral of a three-phase system. For pulsed loads, even-order harmonics may be additive if the pulses occur in each phase at a different time so that they do not cancel in the neutral. This results in overloaded neutrals and becomes a fire safety concern. ITIC recommends providing double-capacity neutrals. Section 310-4 of the National Electrical Code (NEC) suggests installing parallel conductors to alleviate overheating of the neutral in existing installations where there is high harmonic content. Balanced neutral current buildup due to harmonics can be as high as 1.73 times the phase current. Under unbalanced conditions, neutral current can be as much as three times the phase current for worst case, pulsed loads. Oversized (that is per normal linear-load applications) neutrals should be a requirement wherever solid-state equipment is installed.

(4) Harmonics and equipment ratings. Transformers, motors, and generators are rated on the heating effects of an undistorted 60-Hz sine wave. At higher frequencies, hysteresis and eddy current losses are increased, and the conductor's skin effect decreases its ampacity. Substantial harmonic currents therefore will result in substantial heating effects, which means that the equipment loads must be decreased to prevent overheating. Equipment loaded to less than 70 percent of its nameplate rating has been shut down because of harmonic overheating. Unfortunately, there is only one standard on how to derate equipment. American National Standards Institute (ANSI) C57.110 covers transformers, but a measured harmonic distribution of the load current is probably not available to most users. Equipment capability must be checked then by observation based on the temperature rise of the affected equipment.

(5) Lower power factor. Many non-linear loads have an uncorrected low power factor because expensive power factor and harmonic line distortion correction has not been provided. Any decrease in system power factor may indicate a load change has been made, which has increased harmonic distortion.

(6) Crest value changes. Measurements for currents and voltages are based on average or peak values, which are calibrated to read root-mean-square () or effective values. For a sine wave, the crest factor or ratio of the peak to the root mean square (RMS) value is 1.414. Crest values of non-sinusoidal waveforms can be greater than this value, so that normal measuring instruments do not provide correct readings. It is the effective value which is a measure of the true amount of heat from a resistance. Inaccurate measurements (low for average-sensing and high for peak-sensing instruments) can lead to protective device actions such as premature tripping or failure to trip. Induction-disc watt-hour meters, when used for billing, may result in

bills which are usually too high rather than too low. True RMS sensing is practical but requires microprocessor based technology. The use of other than true RMS sensing meters, relays, and circuit breaker trip units may contribute to system operating problems.

(7) Zero crossing increases. Controls such as generator voltage regulators which use the zero crossing point of a voltage or current wave can start hunting where harmonic contents result in more zero crossings than there are naturally in a 60-Hz system. Instability in speed and frequency can result, causing generator paralleling problems. An inaccurate measurement of RMS values can prevent proper load sharing of paralleled units. These are important considerations when generating-capacity requirements are changed. Generator manufacturers should be contacted when existing units are used to supply non-linear loads in order to ensure compatible interfacing.

(8) Noise feedback. Power-line harmonics at audio and even radio frequencies can be interposed on telephone, communication, and data systems by inductive or capacitive coupling and by radiation. FCC has set maximum power line conduction and radiation standards for many types of electric equipment. Unfortunately, not all harmonic-generating non-linear loads come under FCC standards, and improperly shielded and filtered equipment can conduct or radiate noise, which may cause problems even many miles from their source.

(9) Inductive and capacitive influences. High harmonic content can cause resonant circuits at one or more of the harmonic frequencies, resulting in voltages and currents that are higher than equipment ratings. Insulation breakdown, overheated equipment, and eventually equipment failure will result. Additionally, capacitors added for surge suppression or power factor correction may have such a low reactance at higher harmonic frequencies as to cause a short circuit and failure of the capacitor.

(10) Harmonic correction techniques. The measurements of harmonic currents and voltages require special techniques. The inductive and capacitive impedance is variable because of harmonic variations; therefore, its effects are usually unpredictable. More and more the power system is becoming susceptible to the operation of the sensitive electronic equipment, as much as or more than the sensitive electronic device is susceptible to the power source. If harmonic problems have been identified as causing problems, certain procedures are recommended. The following are some of the procedures. Provide oversized neutral conductors. Derate transformers, generators, motors, and UPS if necessary. Insure all controls, especially those involving generator speed and paralleling, are properly shielded and filtered and are designed to respond as quickly as is necessary. Use of unfiltered voltage regulators and non-electronic governors will probably cause problems, especially for generators supplying more than a 25-percent non-linear load. Provide line filters to suppress the harmonics emanating from the power source. Increase power source capacities so as to lower output impedance and minimize voltage distortion. Use UPS outputs which have no neutrals. Where neutral voltages are required, provide isolation transformers as close to their loads as possible to shorten oversized neutral installations. Use true RMS sensing for circuit breaker trip units, relays, meters, and instruments.

o. Advantages and disadvantages of static UPS systems. Static UPS systems have several advantages. They provide disturbance free uninterrupted power, operate at low sound levels, have high reliability and short repair times, require minimal maintenance, simple installation, and lend themselves to future expansion and reconfiguration. However, they also have some disadvantages. Some of the disadvantages are that they introduce harmonics into the power supply system, have a high initial cost to purchase, require large space, require regulated

environment, require skilled technicians for trouble shooting and repairs, and have a somewhat low efficiency.

2-2. Principles of rotary UPS systems

The most basic UPS system is the inertia-driven ride-through system. This system consists of a synchronous motor driving a synchronous generator with a large flywheel as shown in figure 2-20. During normal operation the motor drives the flywheel and the synchronous generator at constant speed proportional to the power supply frequency. The generator output voltage is regulated by the voltage regulator and the frequency is constant and proportional to the motor power supply frequency. When input power is momentarily lost or degrades, the flywheel supplies its stored energy to the generator and the frequency is maintained within the required tolerance for a duration depending on the flywheel inertia. The time interval for which the frequency can be maintained within tolerance is proportional to the ratio of flywheel inertia to the

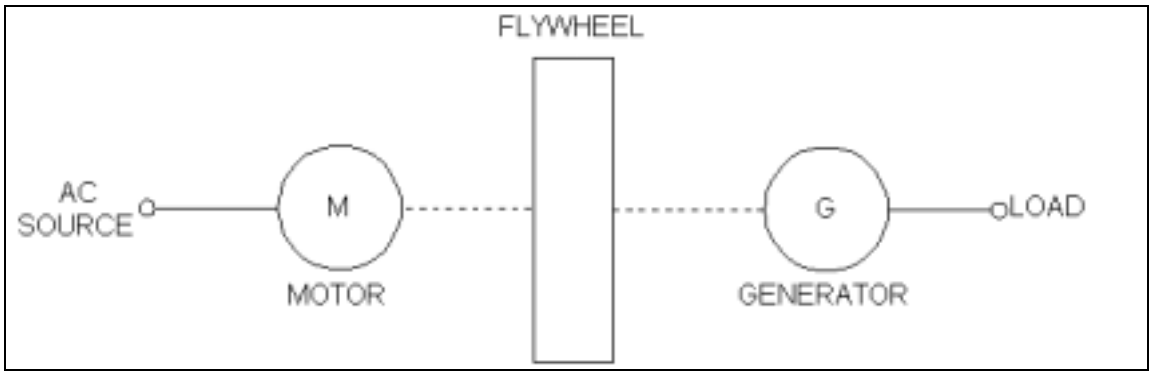

Figure 2-20. Inertia-driven ride-through system

load for a given speed. To keep the system weight low, high speed is required. However, to keep the noise level low, low speed is desirable. Therefore, the system is commonly operated at a speed of 1800 revolutions per minute (rpm) as a trade-off. In this system, a synchronous motor is used to maintain a constant speed independent of the load level. However, an induction motor with very low slip may also be used as discussed in paragraph 2-2a(1). In newer designs an asynchronous motor is coupled with a synchronous generator. This technology uses induction coupling rather than a flywheel for the ride-through inertia. Other designs use a battery. The battery-supported inertia rotary UPS system consists of a synchronous motor driving a synchronous generator, with a rectifier, inverter, and storage battery added. The system configuration is shown in figure 2-21. During normal operation, the synchronous motor drives the synchronous generator and provides filtered power. Upon loss of the ac input power to the motor, the battery supplies power to the motor through the inverter which drives the generator. The batteries provide energy to the system during the transition from normal to emergency operation. This system may also use a kinetic battery in place of the standard lead-acid and ni-cad batteries [see paragraph 2-2b(6)].

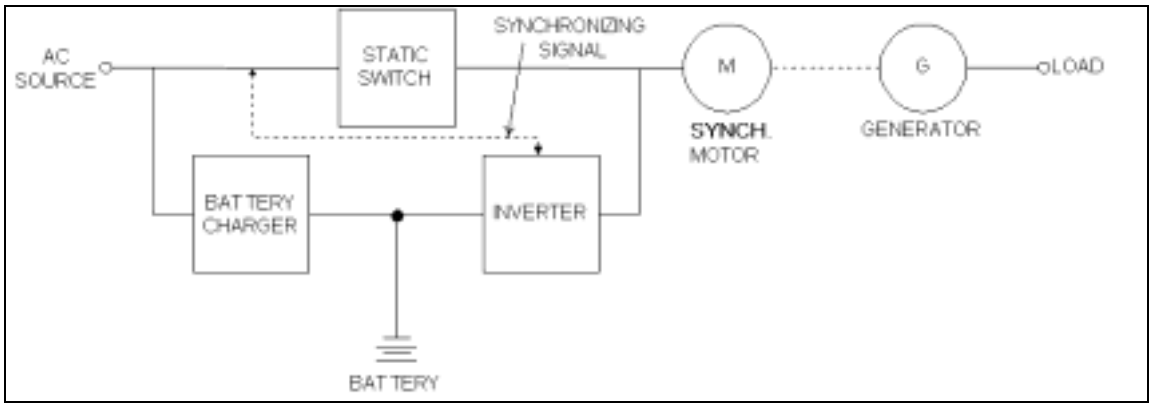

Figure 2-21. Battery supported motor-generator (M-G) set

a. Motor types and characteristics. In a rotary UPS system an ac motor is used to convert electrical energy to mechanical energy for driving an ac generator and a flywheel. Both synchronous and induction motor types may be used. DC motors are also used in rotary systems with a storage battery for back-up power. In the following paragraphs, only the motor characteristics relevant to rotary UPS applications are addressed.

(1) Induction motors. Induction motors are of the squirrel cage or the wound rotor type. It is the three-phase cage motor type that is used in rotary UPS applications. The relevant characteristics of a cage motor are as follows. The motor speed is essentially proportional to the power supply frequency. The motor speed is dependent on the load level. For a motor with 5 percent slip, the speed may increase by up to 5 percent of the rated speed from rated load to no load. The speed variations are lower for low slip motors. When energized, the motor draws a starting current as high as 6.5 times the rated current for a duration of 2 to 10 seconds or longer depending on the load inertia. The induction motor power factor is approximately 0.8 lagging.

(2) Synchronous motors. The relevant characteristics of a three-phase synchronous motor are as follows. The motor speed is independent of the load and is directly proportional to the power supply frequency. The starting current and starting duration of a synchronous motor are slightly less than those of a comparable induction motor. A synchronous motor can be either self-excited or externally excited (see paragraph 2-2b(3) for exciter types). The synchronous motor power factor can be changed from lagging to unity to leading by adjusting the field or exciting current.

(3) DC motors. DC motors are classified according to the method of excitation used as shunt excited, series excited, and compound excited. The shunt excited dc motor is the most suitable in rotary UPS applications and has the following characteristics. The motor speed is dependent on the load level. The speed may decrease by up to 5 percent of the rated speed from no load to rated load. The motor speed can be easily adjusted by varying the shunt field current through the use of a rheostat. The motor can be operated as a generator by applying mechanical input to the shaft.

b. Generator types and characteristics. In a rotary UPS system a synchronous generator is used to convert the motor mechanical energy or the mechanical energy stored in a flywheel to ac electrical energy with regulated voltage. In rotary systems with a storage battery a dc motor or inverter is provided for driving the generator during a loss of ac power. When ac power is available, the dc motor is operated as a dc generator to charge the battery. Newer rotary system

designs may also utilize a back-up inverter and a dc battery to supply the driving motor upon loss of the normal ac power. In the following paragraphs, only the generator characteristics relevant to rotary UPS applications will be discussed.

(1) Synchronous generators. The relevant characteristics of a three-phase synchronous generator are as follows. The generator frequency is directly proportional to the prime mover speed. Controlling the output frequency is accomplished by controlling the prime mover speed. The output voltage can be regulated by varying the field current, i.e., excitation level. The generator rated power factor is normally 0.8 lagging. The generator has a limited load unbalance capability; severe unbalance can result in overheating. The generator can supply a maximum current of 6 to 7 times rated RMS current for a few cycles and 3 to 4 times rated RMS current for a few seconds. The output voltage harmonic content is typically less than 5 percent.

(2) DC generators. Similar to dc motors, dc generators are classified as shunt excited, series excited, and compound excited. The relevant characteristics of dc generators are as follows. The generator output is essentially ripple free power. The output voltage can be precisely held at any desired value from zero to rated by controlling the excitation level. The generator can be operated as a motor by applying dc power to its armature.

(3) Exciters. Exciters are used to create the magnetic field on the generator. They can be broadly classified as static and rotary. In a static exciter all components are stationary and are mounted outside of the machine frame. The synchronous machine field coils are connected to commutator rings, and brushes are used to connect the field coils to the excitation power source. In a rotary exciter, some of the components are rotating and are mounted either on the synchronous machine shaft or externally. Also, in a rotary exciter a commutator ring and brushes may be required or the system may be brushless. Brushless type exciters are more commonly used now due to their lower maintenance requirements. However, selection of the exciter type is largely up to the manufacturer to meet the performance requirements.

(4) Flywheel. A flywheel is used in a rotary UPS system as an energy storage device. The flywheel is coupled to the M-G shaft and supplies stored energy to drive the generator upon momentary loss of the motor output. In addition, it acts to stabilize the generator frequency by maintaining the rotational speed following transient frequency variations at the motor power supply or sudden load changes. The flywheel may be considered an analog to a storage battery (with a very short protection time) in static UPS systems.

(5) Induction coupling. Induction coupling occurs when using an asynchronous motor and a synchronous generator. The induction coupling provides kinetic energy lasting approximately 2 seconds after loss of normal ac power to allow transfer to backup power. During this time a backup diesel generator may be brought on-line to provide power. This kinetic energy is supplied from the rotor. Energy storage is achieved when the rotor of a three-phase, two-pole asynchronous machine is accelerated to 3600 rpm. The stator of the same machine is mechanically connected with the rotor of the synchronous machine, running at 1800 rpm. The squirrel cage rotor of the asynchronous machine will run at 5400 rpm (1800 plus 3600 rpm). To retrieve energy from the squirrel cage, at the moment of power interruption, a controlled dc field is provided through an additional dc stator winding in the asynchronous machine. The magnetic field created in this way brakes the speed of the free running inner rotor, so that energy is released. This energy is used to keep the rotor running at 1800 rpm, while the generator comes on line.

(6) Kinetic battery. The kinetic battery may be used in place of regular flooded lead-acid or ni-cad batteries in the battery backed M-G configuration as shown in figure 2-21. The energy for the kinetic battery comes from a flywheel coupled with a M-G set. The energy from the flywheel is driven by a small pony motor using normal ac power. Upon loss of normal power, the flywheel continues to put out energy through the generator which provides input ac power to the rectifier. The rectifier and inverter filters the ac power and provides ac power to the primary M-G set. The ac power must be filtered to prevent the load from seeing the degradation of the frequency as received from the flywheel-generator source. This system allows for approximately 15 to 30 seconds of ride-through while waiting for the diesel generator to start.

c. Affect of loads on rotary UPS systems. Various types of loads may affect the UPSs ability to perform. Some of these load types are non-linear loads, loads with high inrush current, and unbalanced loads.

(1) Non-linear loads. Non-linear loads as discussed in paragraph 2-1m(1) will distort the synchronous generator output voltage wave shape and cause the output voltage to contain high harmonic content. The harmonic currents generated can also cause additional losses and heating in the generator. This may require derating the generator if the harmonic content of the load current is excessive. The generator manufacturer should provide the derating recommendations which are based on the nature as well as the level of the non-linear loads.

(2) Loads with high inrush current. Unlike a static UPS system, a rotary UPS system is capable of supplying high inrush currents at reduced voltages. The level of voltage reduction is more gradual than for the static inverter and depends on the generator transient reactance.

(3) Unbalanced loads. The unbalanced load capability of a rotary system is less than that of a comparable static UPS system. A synchronous generator has a very limited negative sequence current capability. Highly unbalanced loads produce high negative sequence currents which cause severe overheating.

d. Affect of the rotary UPS system on the power supply system. Due to the high starting current required by ac motors, a rotary UPS system may cause the reduction of the power supply system voltage during startup. The duration of the voltage reduction is dependent on the motor type and the system inertia. It could be as long as 10 or 15 seconds. The power factor of a system with a synchronous motor can be made leading by adjusting the motor excitation level. This means that the motor can be made to supply reactive power to the power supply system and improve its overall power factor. Improving the overall power factor can improve the supply system voltage regulation. On the other hand, systems with an induction motor have a power factor of approximately 0.8 lagging. Such a system requires reactive kVA from the power supply system which may cause a voltage reduction on the supply system. AC motors contribute currents during system faults. A large rotary UPS system may appreciably increase the system short circuit capability.

e. Advantages and disadvantages of rotary UPS systems. The rotary UPS system has both advantages and disadvantages that should be considered at the time of selection.

(1) Rotary advantages. There are many advantages to a rotary UPS system. The rotary system low output impedance makes it able to supply higher fault currents to operate a circuit breaker during fault conditions. They provide total isolation of sensitive loads from power supply system transients. They provide disturbance free uninterrupted power. Systems without storage batteries have a low initial cost. Efficiency is higher than comparable static UPS systems. The

rotary UPS systems have higher tolerance to adverse environments. Some require small space, especially systems without a storage battery. They do not cause power supply system voltage distortion. High ratings, e.g., above 1000 kVA can be built in the rotary UPS design. A rotary system has a lower number of components than a comparable static system and hence has a lower failure rate. It has a low output impedance which makes its output voltage less susceptible to harmonic distortion as may be caused by non-linear loads.

(2) Disadvantages. While there are several advantages to the rotary UPS, it does have some short comings. Some of them are that they operate at high sound levels unless equipped with special silencing enclosures. They require more maintenance and long repair times. Also, they require special foundations. Their installation is more complex. They do not easily lend themselves to future expansion, paralleling, or reconfiguration. Their performance requirements and configurations are not commonly standardized. Fewer manufacturers produce rotary UPS systems as compared to static UPS systems. The rotary UPS has a short backup time and requires either a battery or backup diesel generator for longer backup power.

2-3. Common static UPS system configurations

The building blocks of a static UPS system are rectifier/charger, inverter, battery, and static switch. These building blocks can be assembled in many configurations as required to meet reliability and/or economic considerations. However, some specific configurations have been in common use and are standardized in Institute of Electrical and Electronic Engineers (IEEE) 446. The most common of these configurations in ascending order of reliability are a non-redundant system, a system with static bypass switch, a redundant system, a cold standby redundant system, and a dual redundant system with static transfer switches.

a. Non-redundant system. The non-redundant static UPS system shown in figure 2-22 is the basic system described in paragraph 2-1. One major limitation in this configuration is that failure of the inverter leads to the loss of power to the supplied loads. This limitation makes this configuration undesirable except for supplying redundant loads where the loss of one load group does not impact operation. Another limitation is that due to the limited overload capability of the inverter elements, it is not suitable for supplying loads with high inrush current requirements.

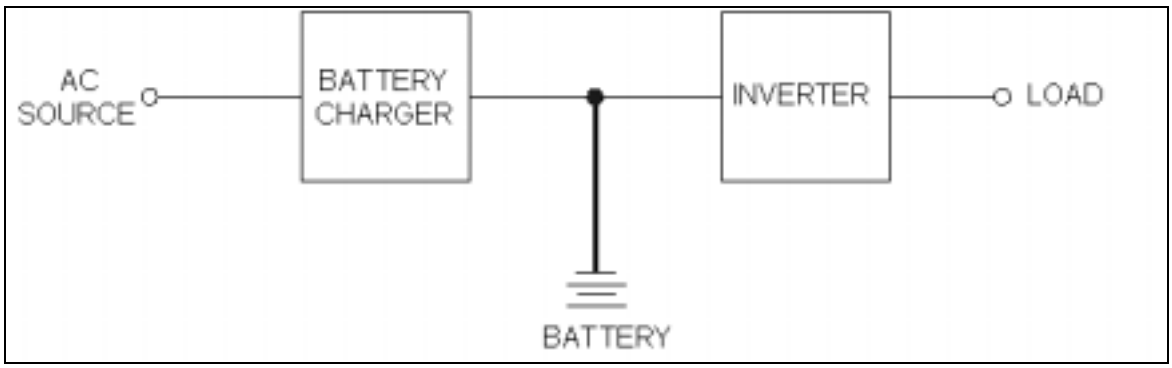

Figure 2-22. Non-redundant static UPS system

b. System with static bypass switch. The static UPS system with a static transfer switch is shown in figure 2-23. It is made up of the basic system with the addition of a static transfer switch to transfer to an alternate ac source. Normal operation of this system is basically the same as the basic system as described in paragraph 2-1. In addition, the static transfer switch sensing and logic circuit continuously monitors the inverter output voltage and initiates a load transfer to

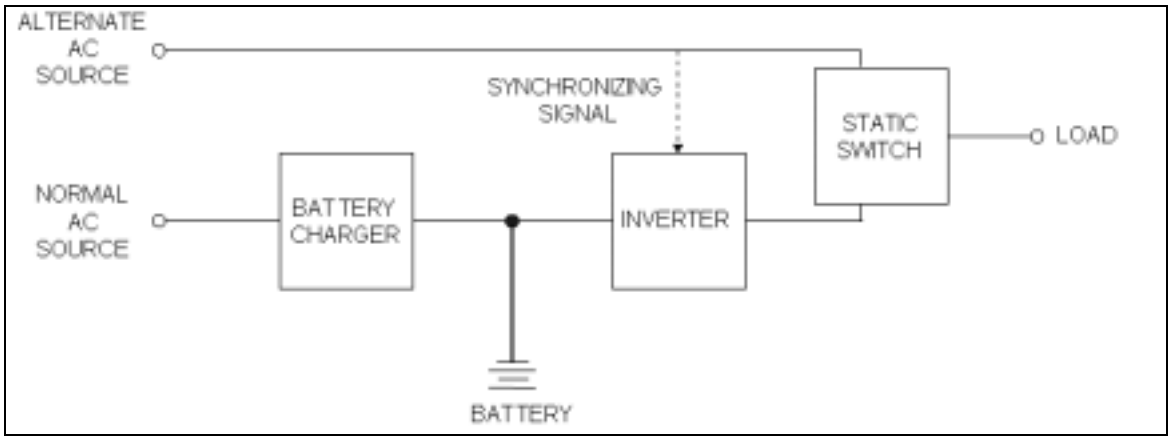

Figure 2-23. Static UPS system with static transfer switch

the alternate source during a loss of inverter output or a deviation of the inverter output voltage beyond the allowable tolerance due to malfunctions, high inrush demand, or a load branch circuit fault. In order to minimize disturbances to the connected loads during transfers, the inverter is synchronized to the alternate ac source. During normal operation the inverter frequency is controlled by the alternate source's frequency. In this mode, the inverter's internal oscillator provided for controlling the inverter frequency is bypassed. However, should the alternate source frequency deviate beyond the allowable tolerance, the inverter automatically reverts to its internal oscillator for frequency control and maintains the frequency within tolerance. The static transfer switch is commonly designed to automatically retransfer the loads back to the inverter when its output voltage recovers to within tolerance. However, the automatic retransfer feature can be inhibited if desired to allow for manual retransfer only. The addition of the static transfer switch to the basic system configuration increases the system reliability by connecting the loads to an alternate source upon loss of the inverter output. In addition, this configuration facilitates supplying loads with high inrush demands. One common improvement to this system is the addition of a regulating transformer as shown in figure 2-24. A regulating transformer is a specially designed transformer which can maintain its output voltage with limited deviations in input voltage. In addition, it can attenuate voltage surges and spikes originating in the power supply source.

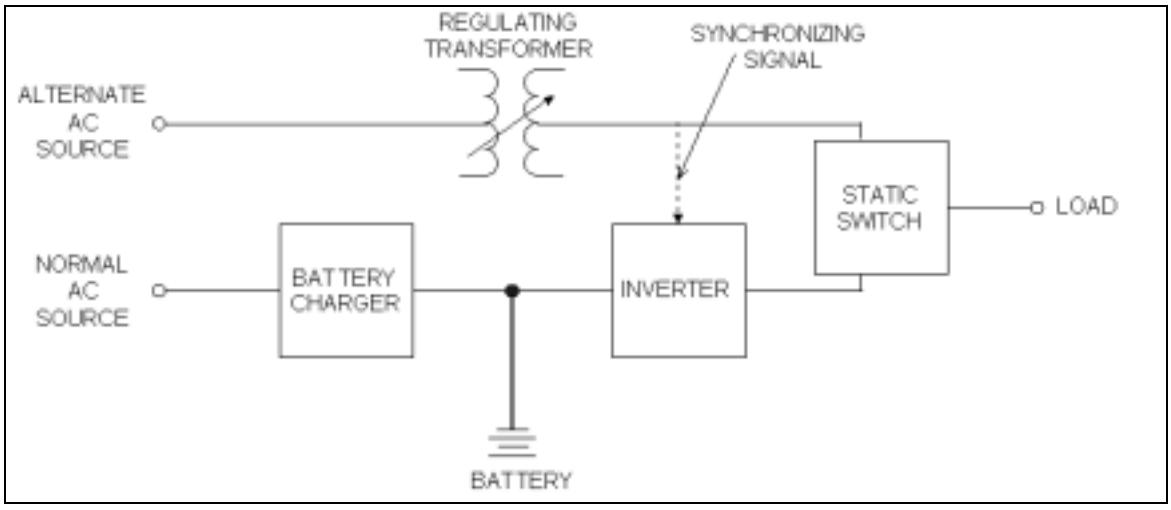

Figure 2-24. Static UPS system with static transfer switch and an alternate source regulating transformer

c. Redundant system. The redundant static UPS system configuration is shown in figure 2-25. This configuration is made up of two or more normally energized basic systems connected in parallel and synchronized with one another. The static interrupters used in this configuration are solid-state devices which serve to isolate a faulty inverter from the connected loads and to prevent the other inverters from supplying high fault currents to the faulted inverter. In this configuration, although the rectifier/inverter combinations are duplicated for higher reliability, only one common battery is used. This is due to the extremely high reliability of batteries. The rating of each of the parallel basic systems should be such that if one system fails, the remaining systems are capable of supplying the connected load. Therefore, for a two-parallel system, each system should be rated for 100 percent capacity and for a three-parallel system, each system should be rated for 50 percent capacity, etc. In this configuration, all the parallel systems are normally energized and share the load equally. It is also used where very high reliability is required. Should one system fail, the remaining systems supply the load without interruption. installations (400 kVA and larger) where the load exceeds the rating of available systems. This configuration is also commonly used in very large configuration is more costly than other configurations to purchase and install. In addition, it has a lower overall efficiency since all the parallel systems have to be operated continuously at part load where the efficiency is lower than at full load. However, this configuration is desirable where very high reliability is essential and the reliability of the ac power supply is questionable. It should be noted that C4ISR facilities require a system reliability level of 99.9999 percent.

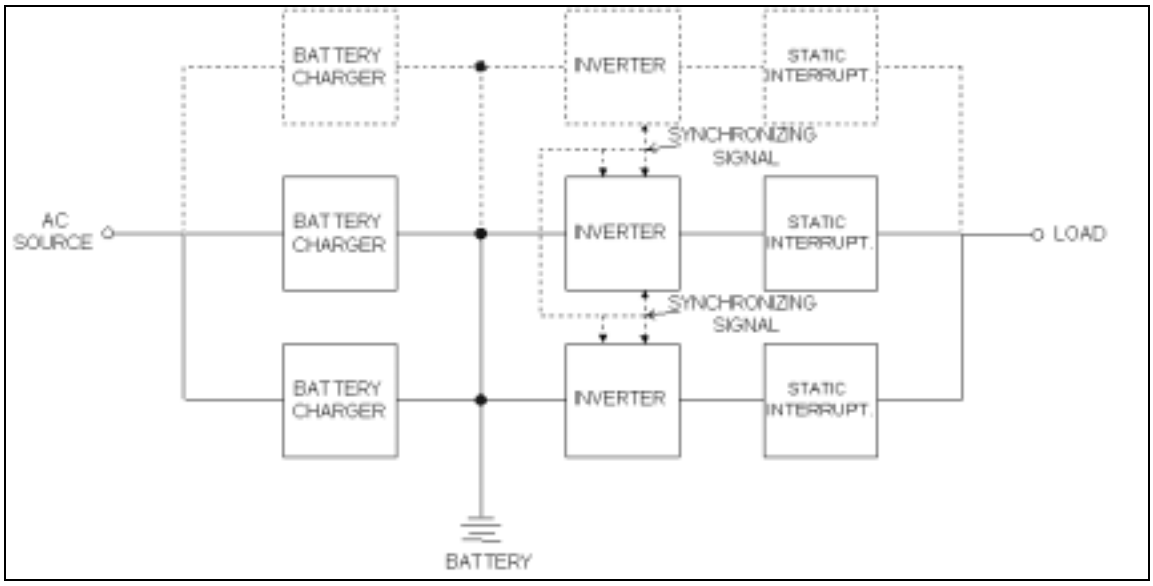

Figure 2-25. Redundant static UPS system

d. Cold standby redundant system. The cold standby redundant static UPS system configuration is shown in figure 2-26. It is made up of two basic systems with one common battery. Each of the two basic systems is rated at 100 percent capacity. During normal operation one system is de-energized and the other system is energized to supply the load through a manually operated circuit breaker. Upon loss of the inverter output, the static switch automatically connects the load to the alternate source without interruption. The second system's static switch is then closed manually, also connecting the load to the alternate source. To transfer the load to the second system, the static switch of the failed system is manually opened. Next the second system's breaker is manually closed, its static switch is opened, and the load is supplied from the system's inverter. During the transfer operations, the load is continuously supplied from

the alternate source without interruption until it is switched to the second system. In this configuration the two inverters are not intended for operation in parallel and their output circuit breakers are interlocked to prevent this condition. One disadvantage of this configuration, when compared to the redundant system, is that the load is supplied from the unregulated alternate source for a short duration before the transfer is completed. Also, the transfer from one system to the other is manually accomplished and requires an operator's action. This makes the use of this configuration undesirable in locations where the alternate power source has a low reliability. However, this configuration has a higher efficiency than a comparable two-parallel redundant configuration. The higher efficiency is due to operating the energized system at 100 percent capacity as compared to operating each of the systems of a two-parallel redundant configuration at 50 percent capacity. Another advantage of this configuration over the redundant system is that the two basic systems are not susceptible to a single failure.

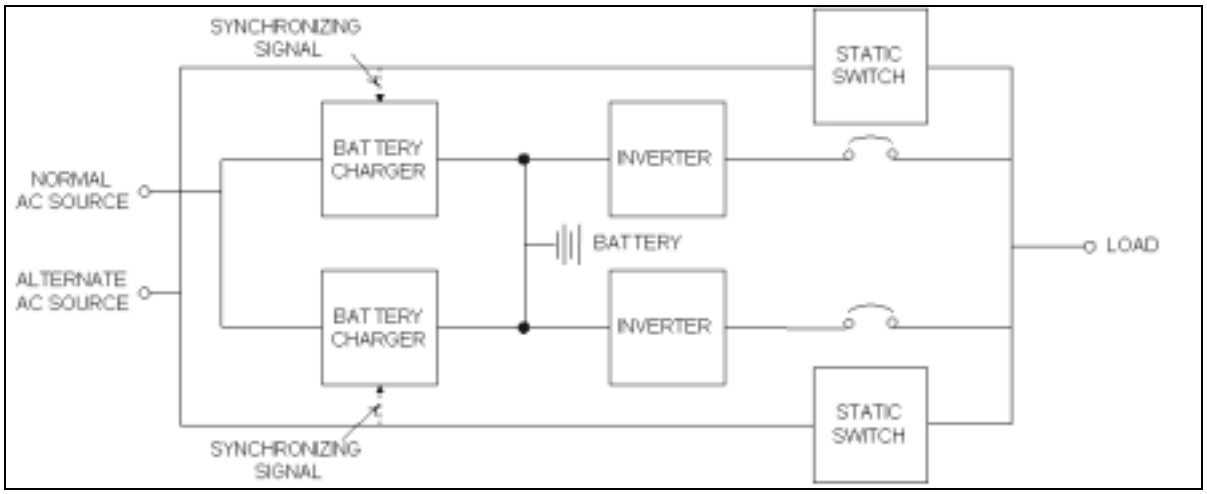

Figure 2-26. Cold standby redundant static UPS system

e. Dual redundant system with static transfer switches. The configuration of the dual redundant static UPS system with static transfer switches is shown in figure 2-27. Like the redundant system configuration, it is made up of two normally energized 100 percent capacity basic systems connected in parallel with one common battery. Each of the two basic systems is synchronized to the alternate source. The static switch provided at the output of each system serves the functions of a static interrupter as in the redundant system configuration, and a switch. Operation of this configuration is similar to the redundant system. In addition, upon loss of both systems or deviation of the output voltage beyond acceptable limits, the static switches disconnect the load from the inverters and connect it to the alternate source in a make-before-break transfer. The addition of the alternate source increases the reliability of this configuration over the comparable redundant system. In addition, the static switches make this configuration capable of supplying high in-rush currents by transferring to the alternate source. As with all systems with a static transfer switch to an alternate ac source, a regulating transformer connected to the alternate ac source is commonly used.

2-4. Rotary UPS system configurations

The main building blocks of rotary UPS systems are the synchronous motor, ac generator, and flywheel. In addition to the main building blocks, induction motors, eddy current clutches, batteries, dc M-Gs, and static rectifier/inverters are also used in rotary UPS systems. The building blocks can be assembled in numerous configurations to meet reliability and/or economic

considerations. The most common rotary UPS configurations are the inertia-driven ride-through system with a synchronous motor, the inertia-driven ride- through system with an induction motor, inertia-driven ride-through system with an induction motor and an eddy current clutch, battery supported inertia system with a dc motor, and battery supported inertia system with a backup inverter.

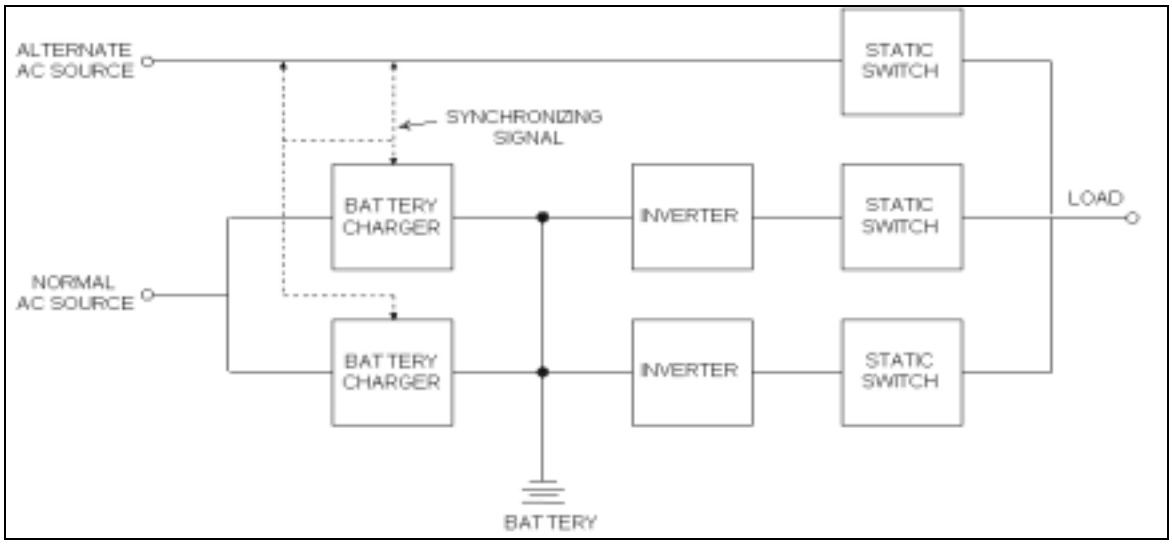

Figure 2-27. Dual redundant static UPS system with static transfer switches

a. Inertia-driven ride-through system with a synchronous motor. The inertia-driven ride-through system with a synchronous motor shown in figure 2-28 is the basic inertia-driven ride-through system described in paragraph 2-2. The main limitation in this configuration is that the ride-through time is normally limited to 0.5 seconds. This makes this configuration suitable only at locations where the power supply has a high reliability and long term interruptions are unlikely as in large metropolitan areas. This configuration is also widely used in frequency changer applications to convert the power supply frequency to another frequency such as 420 Hz. In this application the synchronous motor drives the generator at a constant speed proportional to the power supply frequency. The ratio of the generator number of poles to the motor number of poles should be the same as the ratio of the desired frequency to the power supply frequency. This configuration is becoming less common and it is not available from many manufacturers. However, newer technologies provide an induction coupling system for the inertia ride-through rather than the flywheel as discussed in paragraph 2-2b(5). This system is used with an asynchronous motor and a synchronous diesel generator. The induction coupling allows for approximately 2 seconds of ride-through while the diesel generator comes on line.

b. Inertia-driven ride-through system with an induction motor. The inertia-driven ride-through system with an induction motor is the same as shown in figure 2-28 except for replacing the synchronous motor with an induction motor. In this configuration, the induction motor must be with low-slip characteristics - typically less than 0.5 percent slip. With 0.5 percent slip characteristic, the generator output frequency (for a 60 Hz system) can vary from 59.7 Hz at rated load to near 60 Hz at no load. This configuration has the same limitation as the configuration with a synchronous motor. In addition, it is mostly suitable for supplying loads with higher tolerance to frequency variations. However, due to the lower cost of an induction motor as compared to a comparable synchronous motor, this configuration is less costly.

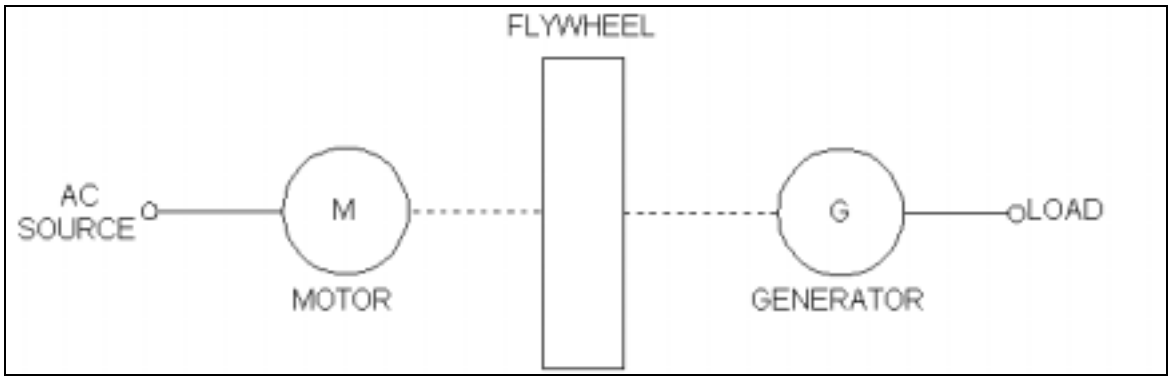

Figure 2-28. Inertia-driven ride-through system with a synchronous motor

c. Inertia-driven ride-through system with an induction motor and an eddy current clutch. This configuration shown in figure 2-29 consists of an induction motor which drives a flywheel and an eddy current clutch at a speed essentially proportional to the supply frequency. The generator rotates at a constant speed lower than the motor speed by controlling the slip of the eddy current clutch. The generator output frequency can be maintained at 60 hertz ±0.25 hertz. On loss of the ac input power, the generator receives energy stored in the flywheel. As the flywheel slows down, the slip of the eddy current clutch is reduced so as to maintain the generator frequency at 60 Hz. The generator frequency can be maintained above 59.5 Hz for up to 15 seconds after loss of ac input power. This configuration is most suitable where a backup power source such as a diesel generator or gas turbine is available. The rotary system can supply the loads until the backup source is started and operated to supply the motor. However, the use of this configuration is becoming less common and it is not available from many manufacturers.

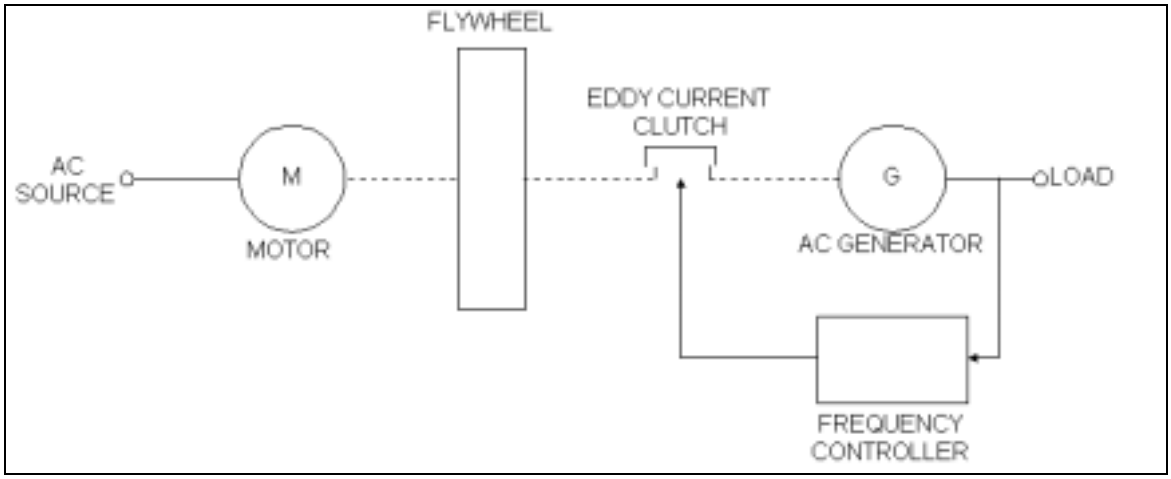

Figure 2-29. Inertia-driven ride-through system with an induction motor and an eddy current clutch

d. Battery supported inertia system with a dc motor. The battery supported inertia system with a dc motor is shown in figure 2-30. The ac motor may be a synchronous or a low slip induction motor. The frequency regulation of systems using an induction motor is the same as the inertia-driven ride-through system described in paragraph 2-2. This configuration is required at installations where the power supply is of low reliability and long term interruptions are common. This type is no longer manufactured, however, there may be some still in use.

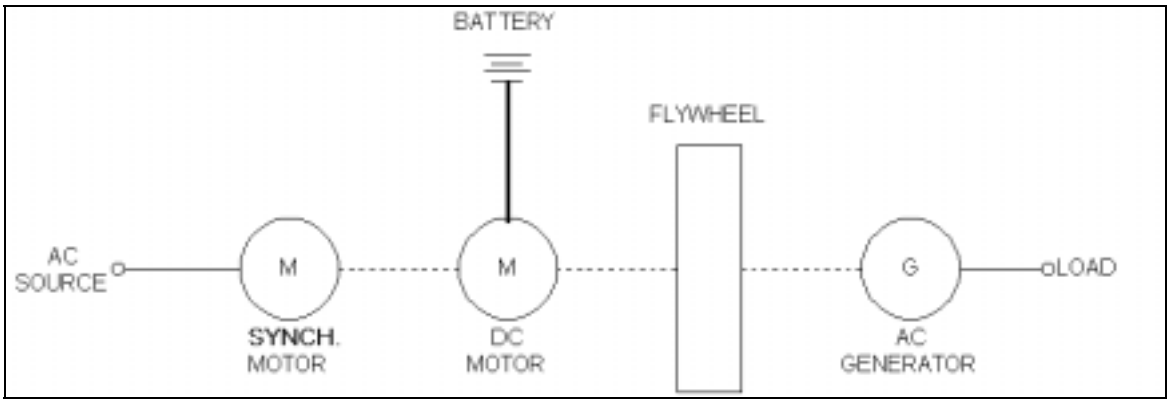

Figure 2-30. Battery supported inertia system

e. Battery supported M-G set. The battery supported M-G system with a backup inverter is shown in figure 2-31. It is made up of a synchronous M-G set with the addition of a rectifier/inverter, batteries, and a static switch. During normal operation, the static switch is conducting and 95 percent of the required power is supplied to the motor from the ac source. The remaining 5 percent power is supplied through the rectifier/inverter while the battery is float charged. The inverter is kept operational at this low power level to ensure that it remains operational and can supply full power in the event of degradation or loss of the ac source. Upon loss of the ac source or deviation of its frequency and/or voltage from acceptable limits required to maintain the generator output, the static switch is automatically blocked and power is supplied from the battery to the motor through the inverter. Upon restoration of the ac source, the static switch automatically conducts and the system reverts to normal operation. This configuration provides conditioned, isolated, and uninterrupted power. In addition, it has a higher reliability and requires less maintenance than a comparable rotary system with a dc motor. DC machines in general require more frequent maintenance due to wear in brushes and wear and pitting in the commutator ring.

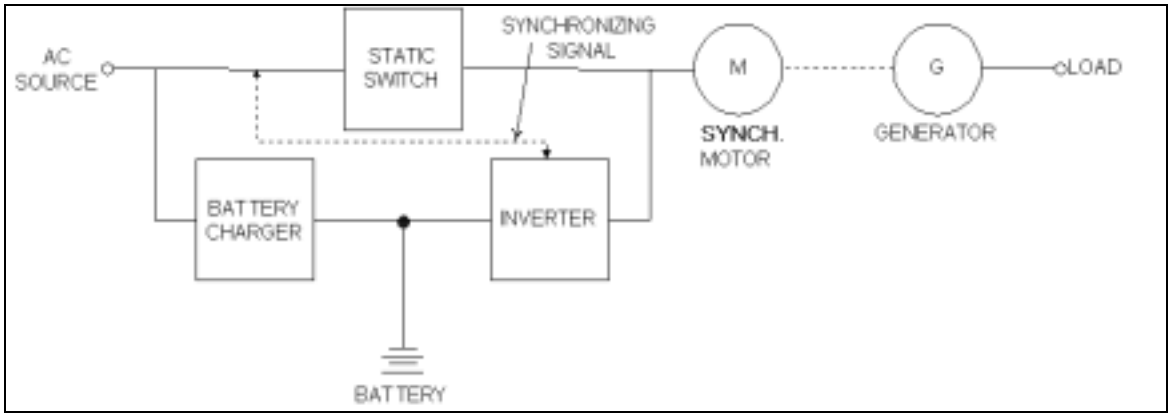

Figure 2-31. Battery supported M-G set

f. Rotary systems with a transfer switch to a bypass source. Like static UPS systems, rotary systems can be provided with a transfer switch to transfer the load to an alternate source upon loss of the generator output. However, unlike the static UPS inverter, it is not practical or economical to synchronize the generator to the alternate source. Therefore, the transfer may

occur in "out-of-synch" mode and may subject the connected loads to undesirable transient overvoltages. Therefore, although the addition of a transfer switch can increase the availability of power supply, live transfer is not recommended in rotary systems. Also, less costly electromechanical switches may be adequate for this purpose.

g. Paralleling of redundant rotary systems. Redundant rotary systems may be connected in parallel to provide higher capacity and/or to increase the reliability as was discussed in paragraph 2-3c for static UPS systems. However, due to the difficulty of synchronizing the generators to one another, switching the individual generators for parallel operation should be performed without the loads being connected to avoid subjecting sensitive equipment to high voltage transients during switching.

CHAPTER 3

DESIGN AND SELECTION OF UNINTERRUPTIBLE POWER SUPPLY (UPS)

3-1. Selecting an UPS

The process for selecting an UPS consists of eight steps. These steps are: determining the need for an UPS, determining the purpose(s) of the UPS, determining the power requirements, selecting the type of UPS, determining if the safety of the selected UPS is acceptable, determining if the availability of the selected UPS is acceptable, determining if the selected UPS is maintainable, and determining if the selected UPS is affordable. The last four steps may require repeating if the UPS does not meet all of the requirements. This process does not and cannot provide a "cookbook solution." Each facility has unique requirements for emergency and standby power. These requirements include the reliability of the prime power source, the nature of the work done, local and state regulations governing emergency power, etc. The process does not give a single solution that is applicable to all cases. It is hoped, however, that it provides the framework for selecting an UPS for any facility. Figure 3-1 illustrates this process. To help illustrate how the selection procedure can be used, an example is provided in appendix B. This example is completely fictitious and should not be considered as "the" model for how the selection process would be used in every case. It does, however, illustrate the many factors that go into the decision process and the need for a good staff to assist the facility manager in making the UPS selection.

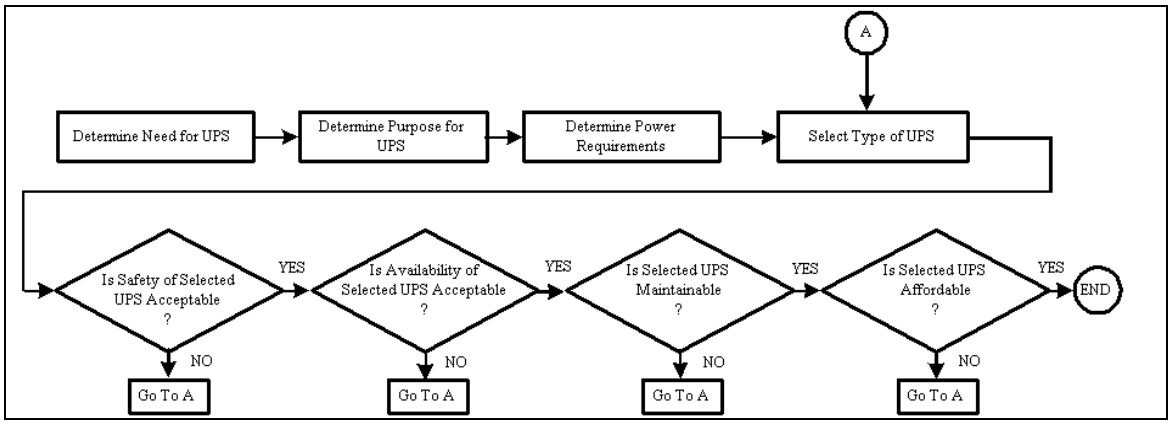

Figure 3-1. Determine the general need for an UPS

a. Determine the general need for an UPS. The assessment process for determining the need for a facility UPS is shown in figure 3-2. Determining the need for an UPS is mainly a matter of evaluating the way in which a facility is used, as well as knowing whether local, state, or federal laws mandate the incorporation of an UPS. The number of regulations mandating an alternate power source to ensure safety of personnel and to prevent pollution of the environment continues to increase. Consequently, enforcement agencies should be consulted to determine if an UPS is mandated. They should also be consulted during design and installation to make sure that the UPS is designed and installed in accordance with current applicable regulations.

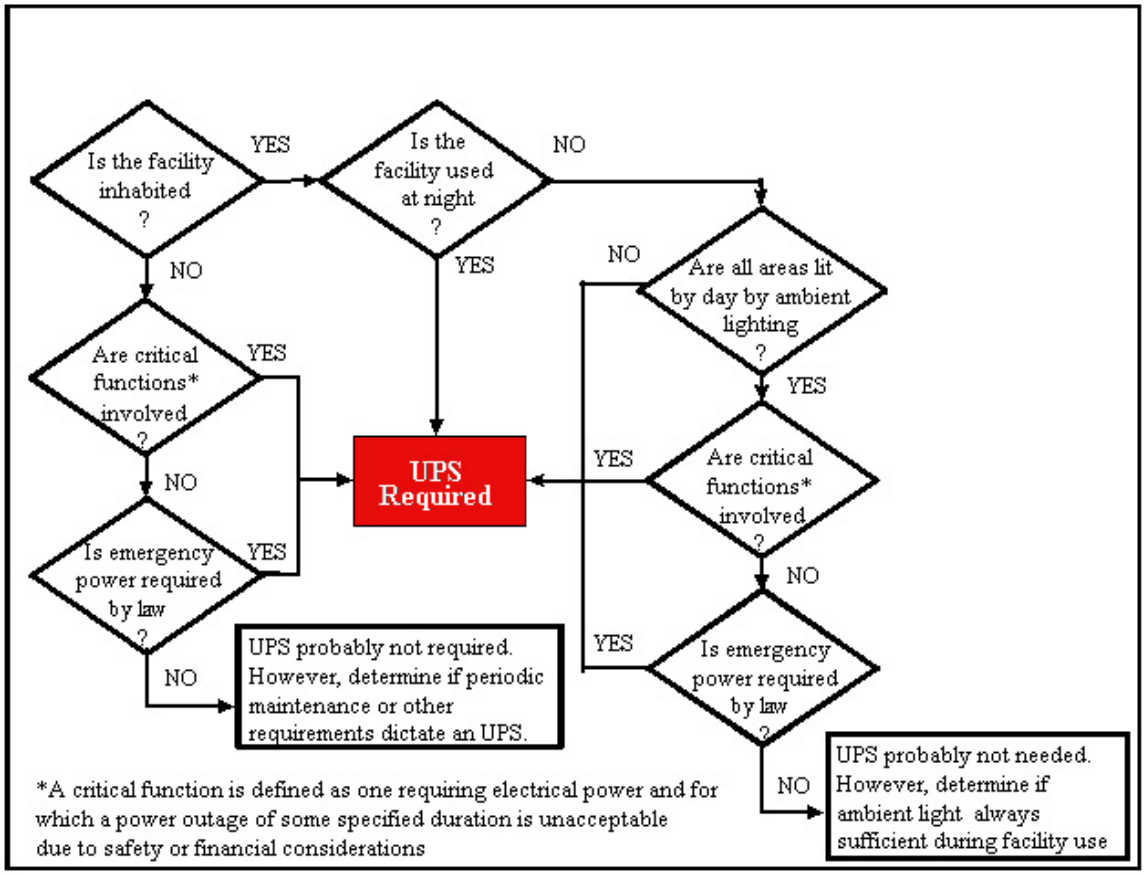

Figure 3-2. Determine the facility need for an UPS

b. Determine the purpose of the UPS. An UPS may be needed for a variety of purposes. These include emergency lighting for evacuation, emergency perimeter lighting for security, shut down or continued operation of manufacturing equipment or computer operations, continued operation of life support or critical medical equipment, continued operation of communications, and safe operation of equipment during sags and brownouts. Some facilities need an UPS for more than one purpose. In any case, the purpose(s) must be known before proceeding because it determines many factors that will drive the amount of power required and the type of UPS that will be needed. These factors are the acceptable delay between loss of primary power and availability of UPS power, the length of time that emergency or backup power is required, and the criticality of the load that the UPS must bear. Applications such as hospital life support and safety, aircraft tracking and landing, and certain production process controls and data processing cannot tolerate any loss of power, no matter how short the period of time, without loss of life or revenue. Other applications like refrigeration, heating, and cooling may tolerate loss of power for several minutes (or longer) without any adverse effects. For data processing equipment, it may be necessary to maintain power until the equipment can be shut down in an orderly manner. This process may take only a few minutes. Alternatively, life support, safety, communications and security equipment, and other applications may require continuous power until primary power is restored. Restoration of primary power could take hours or even days. A survey of commercial power outages may be necessary to determine this information. If commercial power outages are historically infrequent and last only a few minutes or hours, it may not make economical sense to install an UPS capable of supplying power for several days. Table 3-1 lists some general criteria

Table 3-1. General criteria for determining the purposes of an UPS

Power Needed For	Purpose	Maximum Tolerable Power Failure Duration	Recommended Minimum Auxiliary Supply Time	Type of Auxiliary Power		Justification for UPS
				Emergency	Standby	
Lighting	Evacuate Personnel	Up to 10s, preferably not more than 3s	2h	X		Prevent panic, injury, loss of life. Comply with building codes and local, state, and federal laws. Lower insurance rates. Prevent property damage. Lessen losses due to legal suits.
	Illuminate perimeter & for security	10 s	10-12 h during all dark hours	X	X	Lower losses from theft and property damage. Lower insurance rates. Prevent injury.
	Provide warning	From 10 s up to 2 or 3 min	Until prime power restored	X		Prevent or reduce property loss. Comply with building codes and local, state, and federal laws. Prevent injury and loss of life.
	Restore normal power system	1 s to indefinite depending on available light	Until repairs completed and power restored	X	X	Reduce risk of extended power and light outage due to a longer repair time.
	Provide general lighting	Indefinite; depends on analysis and evaluation	Indefinite; depends on analysis and evaluation		X	Prevent loss of sales. Reduce production losses Lower risk of theft. Lower insurance rates.
	Provide power to hospitals and medical areas	Up to 10s (NFPA 99-1996, ANSI/NFPA 101-1994); allow 10s for alternate power source to start and transfer power.	Until prime power restored	X	X	Facilitate continuous patient care by surgeons, medical doctors, nurses, and aids. Comply with all codes, standards, and laws. Prevent injury or loss of life. Lessen losses due to legal suits.
	Facilitate orderly shut-down	0.1 s to 1 h	10 min to several hours	X		Prevent injury, loss of life, and property loss by a more orderly and rapid shutdown of critical systems. Lower risk of theft. Lower insurance rates.
Startup Power	Startup power for boilers	3s	Until prime power restored	X	X	Restore production. Prevent property damage due to freezing. Provide required electric power .
Startup Power (continued)	Startup power for air compressors	1 min	Until prime power restored		X	Restore production. Power instrumentation.
Transportation	Power for elevators	15s to 1 min	1 h (Until prime power restored)		X	Safeguard personnel. Evacuate building. Continue normal activity.
	Power for material handling	15s to 1 min	1 h (Until prime power restored)		X	Complete production run. Permit orderly shutdown. Continue normal activity.
	Power for escalators	15s to no requirement for power	Zero to until prime power restored		X	Evacuate building. Continue normal activity.
Signal Circuits	Power for alarms and annunciators	1-10s	Until prime power restored	X	X	Prevent loss from theft, arson, or riot. Maintain security systems. Comply with codes, standards, and laws. Lower insurance rates. Alert operators to critical out-of-tolerance temperature, pressure, water level, and other hazardous or dangerous conditions.
	Land-based aircraft, railroad, and ship warning systems	1s to 1 min	Until prime power restored	X	X	Comply with local, state, and federal codes, standards, and laws. Prevent personnel injury. Prevent property and economic loss.
Mechanical Utility Systems	Water (cooling and general use)	15s	½h (Until prime power restored)		X	Continue production. Prevent damage to equipment. Provide fire protection.
	Provide water (drinking & sanitary)	1 min to no requirement	Indefinite until evaluated		X	Provide customer service. Maintain personnel performance.
	Provide boiler power	0.1s	1 h (Until prime power restored)	X	X	Prevent loss of electric generation and steam. Maintain production. Prevent damage to equipment.
	Power pumps for water, sanitation, and production fluids	10s to no requirement	Indefinite until evaluated		X	Prevent flooding. Maintain cooling facilities. Provide sanitation.. Continue production. Maintain boiler operation.

Table 3-1. General criteria for determining the purpose of an UPS (continued)

Power Needed For	Purpose	Maximum Tolerable Power Failure Duration	Recommended Minimum Auxiliary Supply Time	Type of Auxiliary Power		Justification for UPS
				Emergency	Standby	
Mechanical Utility Systems (continued)	Power fans & blowers for ventilation & heating	0.1s to until prime power restored	Indefinite until evaluated	X	X	Maintain boiler operation. Provide venting and purging of gas-fired units. . Maintain cooling and heating functions for buildings and production.
Heating	Prepare food	5 min	Until prime power restored		X	Prevent loss of sales and profit. Prevent spoilage of in-process preparation.
	Sustain process	5 min	Indefinite until evaluated; normally for time for orderly shutdown, or until prime power restored		X	Prevent in-process production damage. Prevent property damage. Continue production. Prevent payment to workers during no production. Lower insurance rates
Refrigeration	Power special equipment or devices having critical warm-up (cryogenics)	5 min	Until prime power restored		X	Prevent equipment or product damage.
	Power critical depositories (e.g., blood bank)	5 min (10s per NFPA 99-1996)	Until prime power restored		X	Prevent loss of stored material.
	Power non-critical depositories (e.g., meat, produce)	2h	Indefinite until evaluated		X	Prevent loss of stored material . Lower insurance rates.
Production	Power critical process	1 min	Until prime power restored or until orderly shutdown		X	Prevent product and equipment damage. Continue normal production. Reduce payment to workers on guaranteed wages during nonproductive period. Lower insurance rates. Prevent prolonged shutdown due to non-orderly shutdown
	Process control power	Up to 1 min	Until prime power restored	X	X	Prevent loss of machine and process computer control program. Maintain production. Prevent safety hazards from developing. Prevent out-of-tolerance products.
Space Conditioning	Control critical temperatures	10s	1 min or until prime power restored	X	X	Prevent personnel hazards, product or property damage. Lower insurance rates. Continue normal activities. Prevent loss of computer function.
	Control critical pressures	1 min	1 min or until prime power restored	X	X	Prevent personnel hazards, product or property damage. Continue normal activities. Lower insurance rates. Comply with local, state, and federal codes, standards, and laws.
	Control critical humidity	1 min	Until prime power restored		X	Prevent loss of computer functions. Maintain normal operations and tests. Prevent hazards.
	Control static charge	10s or less	Until prime power restored	X	X	Prevent static electric charge and associated hazards. Continue normal production.
	Control building heating and cooling	30 min	Until prime power restored		X	Prevent loss due to freezing Maintenance of personnel efficiency. Continue normal activities.
	Ventilate for toxic fumes	15s	Until prime power restored or orderly shut-down	X	X	Reduce health hazards. Comply with local, state, and federal codes, standards, and laws. Reduce pollution
	Ventilate for explosive atmosphere	10s	Until prime power restored or orderly shutdown	X	X	Reduce explosion hazard. Prevent property damage. Lower insurance rates. Comply with local, state, and federal codes, standards, and laws. Lower hazard of fire. Reduce hazards to personnel
	General ventilation	1 min	Until prime power restored		X	Maintain personnel efficiency. Provide make-up air in building.
	Ventilation for special equipment	15s	Until prime power restored or orderly shutdown	X	X	Provide purging operation to allow safe shutdown or startup. Reduce hazards to personnel and property. Meet requirements of insurance company. Comply with local, state, and federal codes, standards, and laws.

Table 3-1. General criteria for determining the purposes of an UPS (continued)

IEEE Orange Book Copyright © 1996 IEEE. All rights reserved.

Power Needed For	Purpose	Maximum Tolerable Power Failure Duration	Recommended Minimum Auxiliary Supply Time	Type of Auxiliary Power		Justification for UPS
				Emergency	Standby	
Space Conditioning (continued)	Non-critical ventilation	1 min	Optional		X	Maintain comfort. Prevent loss of tests
	Control air pollution	1 min	Indefinite until evaluated; compliance or shutdowns are options	X	X	Continue normal operation. Comply with local, state, and federal codes, standards and laws
Data Processing	Power CPU memory tape/disk storage, peripherals	½ cycle	Until prime power restored or orderly shutdown		X	Maintain conditions to prevent malfunctions in data processing system. Prevent damage to equipment and storage media. Continue normal activity.
	Control humidity and temperature	5-15 min (1 min for water-cooled equipment	Until prime power restored or orderly shutdown		X	Prevent malfunctions in data processing system and damage to equipment Continue normal activity.
Fire Protection	Annunciator alarms	1s	Until prime power restored	X		Comply with local, state, and federal codes, standards, and laws. Lower insurance rates. Minimize damage to life and property.
	Fire Pumps	10s	Until prime power restored		X	Comply local, state, and federal codes, standards, and laws. Lower insurance rates. Minimize damage to life and property.
	Auxiliary lighting	10s	5 min or until prime power restored	X	X	Service fire pump engine should it fail to start. Provide visual guidance for fire-fighting personnel.
Life Support and life safety systems	X-ray	Milliseconds to several hours	From no requirement to until prime power restored, as evaluated	X	X	Maintain exposure quality. Ensure availability in emergencies.
(Medical offices,	Light	Milliseconds to several hours	Until prime power restored	X	X	Comply with local, state, and federal codes, standards, and laws. Prevent interruption to operation and operating needs
Hospitals, clinics, etc.)	Critical-to-life machines and services	½ cycle to 10s	Until prime power restored	X	X	Maintain life. Prevent interruption of treatment or surgery. Continue normal activity. Comply with local, state, and federal codes, standards, and laws.
	Refrigeration	5 min	Until prime power restored		X	Maintain blood, plasma, and related stored material at recommended temperature and in prime condition.
Communication Systems	Teletypewriter	5 min	Until prime power restored		X	Maintain customer services. Maintain production control and warehousing. Continue normal communication to prevent economic loss
	Inner building	10s	Until prime power restored	X		Continue normal activity and control
	Television (CCTV & commercial)	10s	Until prime power restored		X	Continue sales. Meet contractual obligations.. Maintain security. Continue production.
	Radio systems	10s	Until prime power restored	X	X	Continue sales. Meet contractual obligations.. Maintain security. Continue production.
	Intercom systems	10s	Until prime power restored	X	X	Provide evacuation instructions. Direct activities during emergency. Continue normal activities. Maintain security.
	Paging systems	10s	1/2h	X	X	Locate responsible persons concerned with power outage. Provide evacuation instructions. Prevent panic.

to assist in determining the purposes of a backup power system, diesel generator, UPS, or combination of diesel may vary. Note that the terms emergency power and standby power are used in the table. An emergency power system can be defined as an independent reserve source of electric energy that, upon failure of the primary source, automatically provides reliable electric power within a specified time to critical devices and equipment which, if they fail to operate satisfactorily, would jeopardize the health and safety of personnel, result in property damage, or cause loss of revenue. A standby power system is an independent reserve source of electric energy that, upon failure or outage of the prime source, provides electric power of acceptable quality so that the user's facility(ies) may continue operation in a satisfactory manner.

c. Determine the power requirements. After determining the specific purpose(s) for an UPS, the next step is to determine the facility power requirements. This task is often laborious but is essential because it sets the stage for the remainder of the selection process. Undefined power requirements, or oversight of any initial conditions, could result in the selection of a system that is not capable of meeting the needs of the facility, costly budget overruns, and delays in completing the project. In addition, there is usually significant growth in the number of UPS loads as a manufacturing plant is developed. This must be accounted for in the sizing of the UPS. Figure 3-3 outlines the process of determining the required power capacity. The first question to answer is how much power is needed. Power requirements can be divided into two categories, critical and non-critical. Critical power can be thought of as power for items such as emergency lighting for evacuation of personnel, security systems, central computing systems, signaling systems, medical equipment, and other functions that could cause loss of productivity, or result in injury or a life threatening situation. Non-critical power is used for functions such as general lighting, escalators, coffee makers, etc. Once the power requirements are defined, the next step is to determine how much (if any) to oversize the unit. Oversizing serves two purposes. First, it provides the capability to efficiently and effectively handle surges in power requirements due to peak demands caused by starting machinery, switching power supplies, etc. Secondly, it provides for growth. Over time, power demands may rise due to the addition of equipment or personnel, increases in productivity, and other reasons. Oversizing the UPS ensures it will have the capacity to handle the increased load without the expense of retrofitting the system, which is more costly in the long run. A general rule of thumb in oversizing is to increase the initial power requirement by 30 percent. If oversizing cannot be justified, the UPS should be selected and the installation designed such that future expansion can be accommodated at the least possible cost.

d. Select the Type of UPS. Selecting a particular type and configuration of an UPS depends on many factors that must be considered and weighted according to a facility's particular requirements. These factors include the purpose of the UPS, the required power, cost, safety, environmental, availability, and maintenance. Note that the selection process (see figure 3-1) is iterative. The type and configuration of the UPS initially selected is based on the purpose and power required. If the selected UPS is not acceptable based on one or more of the remaining factors, another type or configuration must be selected and the evaluation repeated.

e. Determine if the safety of the selected UPS is acceptable. Safety is an overriding concern of any UPS design and installation. Safety is basically governed by the electrical codes and standards as adopted by government and commercial agencies, and good judgment on the part of the design and installation team. In cases where more than one performance or safety design alternative exists, preference should be given to those that have been approved by the governmental authority having jurisdiction. Batteries pose special safety concerns for the facility manager. Safety problems associated with lead-acid batteries include spills of sulfuric acid, potential explosions from the generation of hydrogen and oxygen, and the generation of toxic

gasses such as arsine (AsH_3) and stibine (SbH_3). All of these problems can be satisfactorily handled with the proper safety precautions. National Fire Protection Association (NFPA) 70, National Electrical Code (NEC), provides guidance on battery room ventilation. Wearing face shields and plastic/rubber aprons and gloves when handling acid is recommended to avoid chemical burns from sulfuric acid. Precautions must be routinely practiced to prevent explosions from ignition of the flammable gas mixture of hydrogen and oxygen formed during overcharge of lead-acid cells. The gas mixture is explosive when hydrogen in air exceeds 4 percent by volume. A standard practice is to set warning devices to alarm at 20 to 25 percent of this lower explosive level. Hydrogen accumulation is usually not a problem if good air circulation around a battery is present. If relatively large batteries are confined in a small room, an exhaust fan(s) should be used to constantly vent the room or should start automatically when hydrogen accumulation exceeds 20 percent of the lower explosive limit. Finally, the materials used in the battery container should be fire retardant.

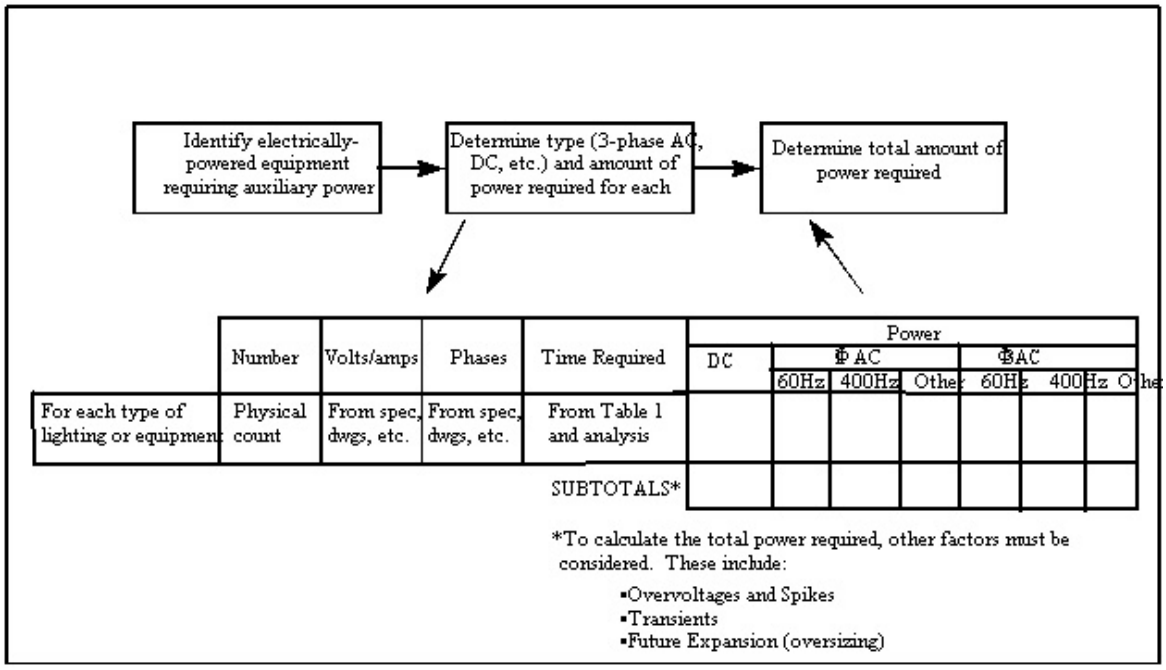

Figure 3-3. Determine the required power is a key step in the UPS selection process

f. Determine if the availability of the selected UPS is acceptable. In managing a facility, the availability of equipment and systems is of the utmost concern. Simply stated, availability is the amount of time a piece of equipment is available to perform its function divided by the total time the equipment is needed. It is also defined as "uptime" divided by "total time." Thus, if an air conditioner is required 12 hours each day, the availability would be 90 percent if it is out of commission an average of 1.2 hours each day. Normally, the required availability for UPS is 98 percent. Availability is a function of reliability and maintainability. The inherent or designed-in availability is usually expressed as follows.

$$A_i = \frac{MTBF}{MTBF + MTTR}$$

where: A_i is inherent availability
MTBF is mean time between failure (a measure of reliability)
MTTR is mean time to repair (a measure of maintainability)

Reliability is the probability that the item will perform as intended for a specified period of time, under a stated set of conditions. It can be expressed in terms of the number of failures in a given time (the failure rate), or as the time between failures (for repairable items), or time to failure (for "one-shot" or non-repairable items. Maintainability is defined as the relative ease and economy of time and resources with which an item can be retained in, or restored to, a specific condition. This assumes maintenance is performed by personnel having the specified skill levels, using prescribed procedures and resources, at each prescribed level of maintenance and repair. It can be expressed as the probability that an item can be restored to operational condition in a stated time, the number of repairs that can be made in a specific time (repair rate), or the MTTR. From the equation for A_i, it is obvious that availability can be increased by increasing MTBF or reducing MTTR. For example, assume the MTBF and the MTTR of a single UPS unit are 500 hours and 20 hours, respectively. The inherent availability of a single unit configuration would be:

$$A_i = \frac{500}{500 + 20} = 0.962$$

The inherent availability of a two-unit configuration where only one unit is required would be:

$$A_i = A_1 + A_2 - (A_1 \text{ x } A_2) = 0.999$$

The inherent availability of a two-unit configuration where both units are required would be:

$$A_i = A_1 \text{ x } A_2 = 0.925$$

The availability could be increased by increasing the reliability or reducing the MTTR. The reliability could be increased by selecting a more reliable unit, derating the unit (i.e., use a unit capable of providing more power than needed - when used, it will be operating below its capacity thereby reducing stresses), or use redundancy (see 3-1f). MTTR could be decreased by selecting an inherently more maintainable system or perhaps by improving diagnostics, training, or procedures.

(1) UPS reliability. Reliability is a function of the design of the UPS, the configuration selected, and the parts used. The environment that the UPS is installed in also plays a role in the reliability of the UPS. Environmental factors such as excessive heat, cold, humidity, and/or dust can all have a significant effect on the UPS reliability. Another significant factor in UPS reliability is the configuration. The different UPS configurations were discussed in paragraphs 2-3 and 2-4. Redundancy reduces the overall failure rate of the UPS because one failure does not cause the UPS to fail. The example in figure 3-4 illustrates why this so.

As discussed in paragraph 2-3c, two units may be placed in parallel where each is capable of supplying 100 percent of the load or three units may be placed in parallel where each is capable of carrying 50 percent of the load. The earlier case where one of two units is required is the most reliable. This is shown through the following equations. The reliability where two of three units are required to supply 100 percent of the needed power, is given by the following equation.

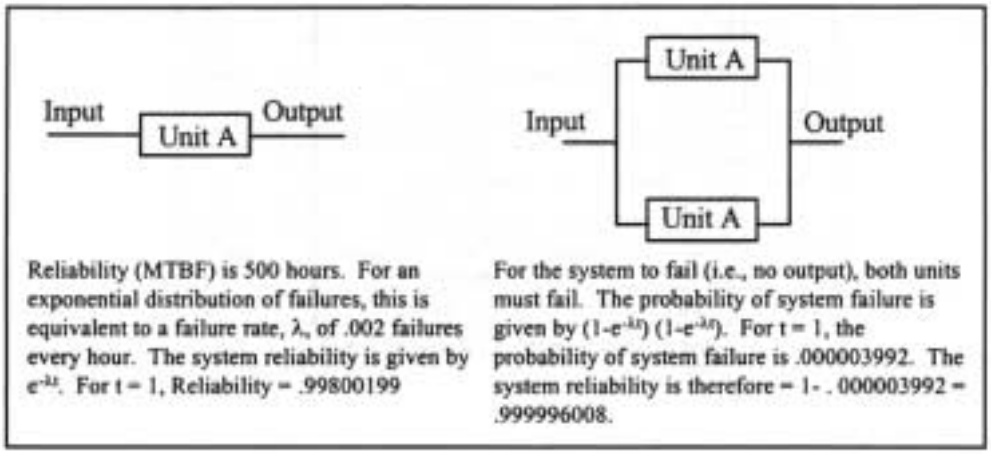

Figure 3-4. Redundancy improves system reliability

Reliability = $R(t) = 3e^{-2\lambda t}-2e^{-3\lambda t}$

where: λ is the failure rate of each unit and the units fail exponentially
t is the time over which the system must operate

The reliability where one of two units is needed to supply 100 percent of the power, the reliability is given by the following equation.

Reliability = $R(t) = 2e^{-\lambda t}-e^{-2\lambda t}$

Table 3-2 shows the reliability for various values of t and λ.

Where f/h is failures per hour and h is hours.

Table 3-2. Comparison of reliability of parallel redundant and parallel configurations

λ (f/h)	t (h)	CONFIGURATION	
		Parallel Redundant (1 of 2)	Parallel (2 of 3)
.01	1	0.999901	0.999705
.02	1	0.999608	0.998839
.03	1	0.999127	0.997431
.01	2	0.999608	0.998839
.02	2	0.998463	0.995508
.03	2	0.996609	0.990221
.01	3	0.999127	0.997431
.02	3	0.996609	0.990221
.03	3	0.992592	0.979052
.01	4	0.998463	0.995508
.02	4	0.994089	0.983176
.03	4	0.987213	0.964531
.01	5	0.997621	0.993096
.02	5	0.990944	0.974556
.03	5	0.980598	0.947198

Redundancy is the duplication of elements in a system or installation for the purpose of enhancing the reliability of the system or installation. The two most common redundant designs are the isolated parallel and parallel redundant systems. See figure 3-5.

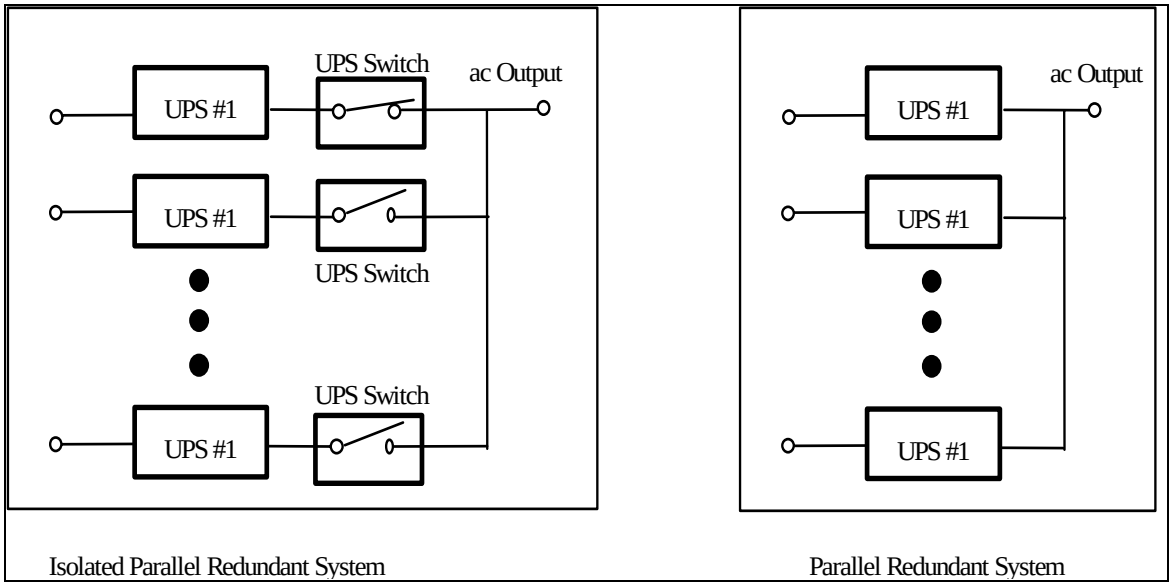

Figure 3-5. Basic redundant UPS designs

Isolated and parallel redundant systems involve paralleling multiple power-conversion modules. The designs are termed redundant because they contain at least one more unit than is required to support the load. The basis for this arrangement is that if one of the power–conversion modules fails or must be taken off line for service, the remaining unit(s) is able to support the load. This approach can provide significant improvement to the systems reliability, but must be designed and installed properly in order to achieve its full potential. Parallel redundant systems can actually be less reliable if the power conversion units are not tolerant of disturbances and overloads on their outputs. Although redundancy improves the system-level reliability, it actually increases the total number of failures that will occur. The reason the number of failures increases is that the number of operating modules, subsystems, or components has increased and nothing has been done to reduce their basic failure rate. The reliability of the UPS is certainly affected by the battery selected. In choosing an UPS, criteria that the buyer might use in evaluating the batteries are shown in table 3-3. Reliability and availability data on UPS components can be obtained by contacting the manufacturer or, if the information is not available, by referencing the Institute of Electrical and Electronics Engineers (IEEE) 500. Due to the nature of their critical loads, C4ISR systems are desired to maintain a reliability level of 99.9999 (commonly known as the six-nine rule). This should be taken into account as one attempts to design or select an UPS system. The selected UPS system, in combination with the overall system, should maintain reliability level of 99.9999 or higher. Therefore, it might be necessary to design and select a system with greater redundancy, in order to achieve the "six-nine" goal.

(2) Maintainability. As already shown by the availability equation, reducing the time to restore a system after it has failed is another way to increase availability. Major factors determining the ease and economy with which maintenance can be performed are means for identifying the component(s) that caused the system to fail (i.e., diagnostics), accessibility of components, and skills and resources needed to repair the system (through in-place repair of the failed component(s) or by removing and replacing them).

Table 3-3. Criteria for evaluating UPS battery

CRITERION	FOR RELIABLE PERFORMANCE & LONGER LIFE
The thickness of the positive plate	Thicker is better for durability.
The material used for the battery posts	Copper inserted posts operate more efficiently and cooler, and require less frequent retorquing than do lead posts
How the batteries are tested at the plant	Cells should be tested together
Capacity at which the batteries are shipped from the factory	Anything less than 100% makes it debatable whether 100% can ever be achieved
Tolerance to temperatures above 77°F	The higher, the better
Frequency at which a boost charge is needed	Less frequent is better
Frequency at which testing is required	Less often for short times is better

(a) Diagnostics. Identifying what has caused a system failure requires a diagnostics capability. This capability can consist of built-in test, manual troubleshooting procedures, or troubleshooting using external test equipment.

(b) Accessibility. Once the component(s) that caused the system to fail are identified through the diagnostic capability available for the system, maintenance personnel must gain access to those components. (Access may also be an issue in performing the troubleshooting of the system failure.) To some extent, the accessibility is determined by the installation as well as the system design. Access to certain areas of an UPS installed in a very limited space may make repair very difficult even though the UPS design is very maintainable.

(c) Skills and resources. Even a system that has the most reliable and thorough diagnostics and is designed for total accessibility will not be economical to maintain if highly skilled personnel and extensive and expensive equipment are required. When highly skilled personnel are required, the cost of maintenance increases, obviously. However, the consequences go beyond the cost of actual repairs. Training costs also increase. Ideally, personnel will need only low to moderate skills and a minimum of training (initial and recurring). Special qualifications for UPS maintenance personnel can include fundamentals of electrical and electronic design of UPSs, UPS testing and maintenance practices, specific maintenance training on identical or similar equipment, UPS safety precautions, and facility-specific procedures for operation, surveillance, and maintenance. Economical support is also difficult to achieve if many different pieces of expensive test equipment and tools are needed to support the UPS. Ideally, the only tools required will be common hand tools normally found in a facility maintenance shop and the number and cost of test equipment will be minimal.

g. Determine if the selected UPS is maintainable. Maintenance determines much of the operating cost of an UPS. Done correctly, maintenance can ensure that the UPS stays reliable. Poorly done, maintenance can compromise reliability and safety. A system may be inherently maintainable (i.e., good access, good diagnostics, etc.), but other factors can determine whether or not the system can be maintained. These factors include availability of trained personnel, availability of spares and parts, and location of repair facilities for removed components. Availability of personnel is a function of the total number of maintenance personnel, the hours of facility operation (dictates the number of shifts during which maintenance personnel may be required), and training schedules. Availability of spares (to replace removed components) and parts (to repair in-place or removed components) depends on the total number initially procured. Replacement and repair then depends on the rate spares and parts are purchased and the rate at which the spares and parts become obsolete. Location of repair facilities is important because if

they are located a significant distance from the UPS, transportation may increase the time (and the cost) to restore the UPS to operation. In many cases, the facility manager may choose to do only that maintenance performed directly on the UPS (i.e., in-place repair and removal and replacement) with internal resources. All other maintenance (i.e., repair of removed components) would be done by the UPS manufacturer or a third party. Alternatively, the manager may contract out all of the maintenance. This decision should be made primarily on the basis of cost and availability. The cost of hiring and training personnel should be compared to that of contracting out all or some of the maintenance. The expected number of repairs should be considered. A study of high failure rate components and the stock levels needed to minimize down time is also important. Another party might be able to maintain the required stock levels at a lower cost and might be able to make repairs in a shorter time. On the other hand, many contractors require time (typically 24 hours) to respond to a problem. This additional time may result in large losses of revenue. Even if internal repair is more expensive, the added cost may be more than offset by the savings in revenue.

h. Determine if the selected UPS is affordable. Although discussed as the last step in the selection process, affordability is often a limiting factor in the selection of an UPS. It is placed last because the pricing of the UPS can only be done when the type, configuration, and sizing are known. These parameters cannot be known until the steps in paragraph 3-1 have been completed. When considering the cost of an UPS (or any product, for that matter), it is best to consider the total cost, or *life cycle cost*, that will be incurred. (See figure 3-6 that describes the process for determining affordability.) For an UPS, the total cost includes the purchase price, installation cost, operating and support costs, and disposal costs. The acquisition and installation of the

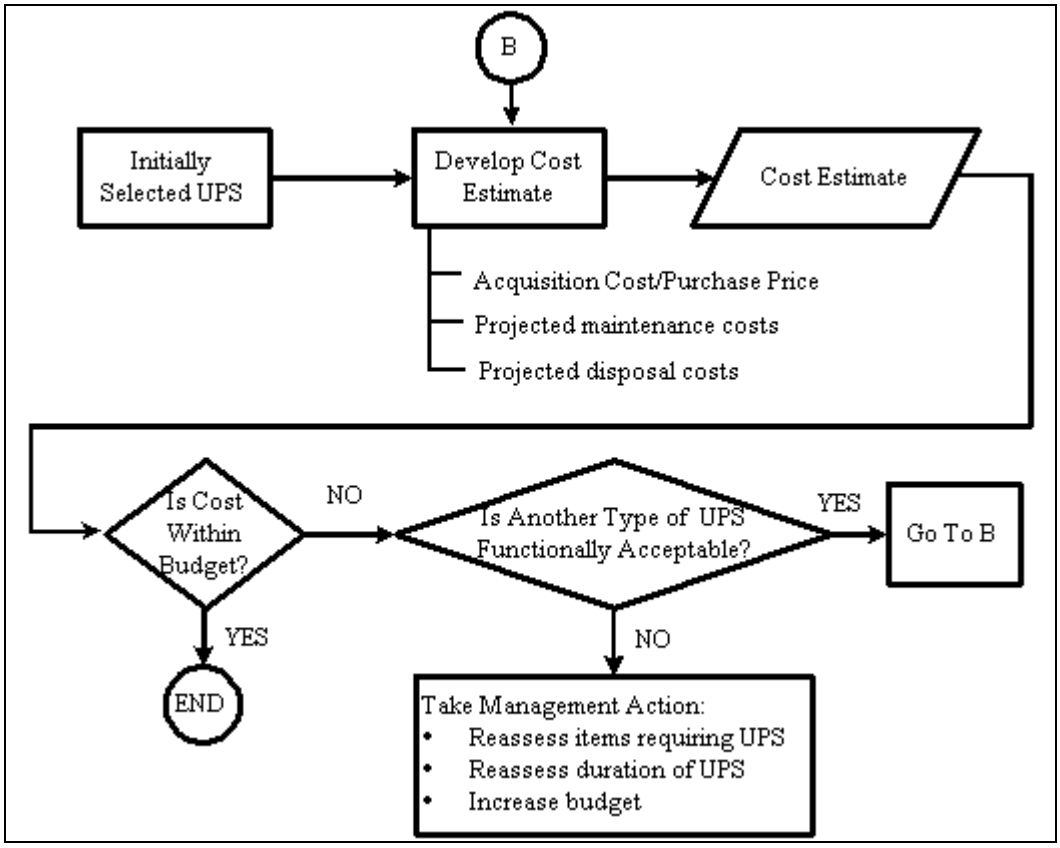

Figure 3-6. Determining affordability requires that all costs be considered

UPS typically constitute the greatest portion of the life cycle cost. A static UPS will cost between $100 and $250,000 while the cost of a rotary ranges between $5000 and $1,000,000 for single units. The cost of any needed auxiliary equipment must also be considered. At a minimum, a manual bypass switch is required to disengage the UPS from the input power and load during maintenance or repair. These switches are typically integrated into a static UPS but are stand-alone items with rotaries. In the latter case, the switches require additional cabling and support hardware. More sophisticated systems having automatic monitoring, switching, and control functions requiring additional components, adding to the complexity and cost of the system(s). As part of the installation costs, the costs associated with needed facility modifications should also be considered. If the UPS is operated under adverse conditions, availability will suffer. Specific precautions must be taken for dirty, hot, cold, corrosive, explosive, tropical and other adverse conditions. Additional air conditioning might be required for the UPS (or for the facility due to heat loads from the UPS). Rotary units may require additional or special ventilation equipment to purge toxic fumes from working areas. Floor units (usually static UPS for computer system backup) may require strengthening of the floor to support their weight. Large UPSs may require the construction of a separate building to house the unit. A rotary UPS or engine generator used in a cold climate will probably require thermostatically controlled lubricating oil, coolant heaters, and radiator louvers. All equipment manufacturers specify the temperature extremes, humidity, and other conditions for which the UPS was designed. Operating and support costs of the UPS are usually secondary to the costs of purchasing and installation. However, they can be substantial and should be included as a factor in the final selection. Operating and support costs include cost of fuel, maintenance, replacement parts, and taxes. Finally, when an UPS reaches the end of its life, disposal costs will be incurred. Disposal may simply consist of dismantling the UPS and selling the parts to a recycling company or dumping it at an approved refuse site. For UPSs containing dangerous or environmentally unsafe chemicals or materials, disposal is much more complicated and expensive. For example, disposal of lead-acid batteries must be performed according to all federal, state, and local regulations. Lead-acid batteries should be reclaimed to avoid the regulatory requirements for hazardous waste treatment and disposal facilities. Reclamation may be included as part of a procurement contract for replacement batteries or contracts may be placed with a permitted reclaiming facility. In disposing of spent batteries, the facility manager must ensure that batteries meet all radioactive contamination requirements for uncontrolled release. A variety of UPS types and configurations can be selected. The costs can vary widely depending on the specific type and configuration selected. It is impractical to provide an all-inclusive cost comparison of all possible combinations of types and configurations.

3-2. Static UPS system ratings and size selection

Presently, there are no standard ratings and performance characteristics for static UPS systems. However, the typical performance specifications from various manufacturers are indicated in tables 3-4, 3-5, and 3-6. The performance specifications are normally based on operating the static UPS system under typical environmental conditions as shown in table 3-7. These ratings only provide a general listing of typical ratings. The manufacturer's ratings shall be used to determine if the UPS will perform in the specified environment. It may be necessary to derate the equipment where the manufacturer's performance specifications are exceeded.

a. Determining static UPS system rating. In order to properly size and select a static UPS system, the load kVA, load power factor, inrush kVA or current, load voltage, number of phases and frequency, and required battery protection time should be determined for the load to be served.

(1) Determining load kVA. In existing installations, the load kVA should be determined by measuring the current with all equipment operating. In three-phase installations, the load current should be measured at each phase. The load kVA can then be estimated as follows.

Table 3-4. Typical rectifier/charger ratings

a. Input	
Voltage	208, 220, 240, 380, 415, or 480 V, ± 10%, 3 phase / 120/220 V, ± 10%, 1phase
Frequency	50 or 60 Hz. ± 0.5%
Power Factor (typical)	0.8
b. Output	
Nominal Voltage	110 VDC, 220 VDC nominal 130VDC, 260 VDC nominal ±5% adjustment
Equalize Voltage	140 VDC, 280 VDC ±5% adjustment
Ripple Voltage	<2% RMS with batteries
Equalize Timer	1-100 hours, manual start, auto-reset
Capacity	Sized to recharge the battery in 8 to 10 hours

Table 3-5. Typical inverter ratings

a. Input	
Voltage (range)	120, 220 V ± 20%
b. Output	
Voltage	120 V, single phase 280 V or 480 V, 3 phase, 3 or 4 wire
Voltage Regulation	± 2% for balanced load ± 3% for 100% unbalanced loads (3 phase only)
Sync range	±0.5 Hz
Load Power factor	0.8 to 1.0
Transient Recovery	± 3% within 10 milliseconds ± 1% within 30 milliseconds
Harmonic Distortion	3% maximum single harmonic 5% THD maximum up to crest factor 2 3% THD maximum for linear loads
Frequency	50 or 60 Hz ±0.1%
Overload Capacity	500% for 1 cycle, 120% continuous
Crest factor	3:1 at full load

Table 3-6. Typical static switch ratings

Transfer Time	0 s (Make-before-break)
Overcurrent Transfer	120% of rated full load current
Overload Capacity	1000% for 1 cycle

Table 3-7. Typical environmental ratings

ambient temperature range	0° to 40°C
relative humidity range	0 to 95% non-condensing
operating Altitude	0 to 1200 meters
audible noise	<67 dB(A) at 1.5 meters

Single-phase loads

$$kVA = \frac{VI}{1000}$$

where: V is the system voltage in volts

I is the measured current in amperes

Three-phase loads

$$kVA = 1.73\frac{VI}{1000}$$

where: V is the phase-to-phase voltage in volts

I is the highest measured phase current in amperes

In cases where the load current cannot be measured or when the installation is in the planning stage, the load kVA should be calculated. Calculating the kVA requires obtaining the individual load kVAs from equipment manufacturers' data. The total load kVA is then obtained by vectorially adding the individual load kVAs. However, when an individual load power factor is not available, it can be estimated from the data in table 3-8. Also, an approximate but conservative estimate of the load kVA may be obtained by arithmetically adding the individual load kVAs.

Table 3-8. Typical load power factors and inrush requirements

Type of Load	**Power Factor**	**Inrush %**	**Duration**
Induction motor or MG set	0.75	500-800	1-30 sec.
Computer central processor unit	0.9-0.85	600-1000	2-6 cycles
Computer peripherals	0.8	500-800	1-30 sec.
Process instruments & controls	0.85	300-500	2-6 cycles
Fluorescent lights (corrected type)	0.95	300-600	1 cycle
Incandescent lights	1.0	600-1500	2-6 cycles
Regulated DC power supply (or battery charger)	0.6-0.8	600-1000	2-6 cycles
Unregulated DC power supply	0.9	600-1000	2-6 cycles
Transformer	Same as load	1000	1 cycle
Magnetic line regulators (auto-transformer)	0.6-0.8	200-300	1 cycle
Ferroresonant type line regulators (CVT)	0.5 lead to 0.5 lag	600-1000	1-3 cycles
Solenoids. Relays and Contactors	0.5	1000	2-3 cycles

(2) Determining load power factor. In existing installations, the load power factor should be determined by actual measurements using a power factor meter. In cases where actual measurements cannot be taken or when the installation is in the planning stage, the load power factors should be calculated. To calculate the load power factor, the kVA and power factor of the individual loads should be obtained from the equipment manufacturers' data. When a load power factor is not available, it can be estimated from the data in table 3-8. The total load power factor can then be calculated. Estimating the load power factor is necessary since the kVA rating and performance parameters of most static UPS system designs are guaranteed only at a power factor

range of 0.8 lagging to unity. The static UPS system kVA capacity and performance parameters are affected at other power factors.

(3) Determining load inrush kVA. Determination of the load inrush kVA is particularly important for static UPS configurations without a static transfer switch and bypass capability. In these configurations, if the load inrush kVA requirements exceed the inverter capability, the inverter will reach the "current limit" mode causing the output voltage to drop. In configurations with a static transfer switch and bypass capability, determining the load inrush current requirements is required for proper selection of overcurrent protective devices for the transfer switch and coordination with other overcurrent protective devices. The load inrush kVA or current in existing installations should be determined by actual measurement using a high speed storage oscilloscope or oscillograph. Since all loads are not normally started simultaneously, the inrush kVA or current requirements should be determined by energizing the load with the highest inrush kVA while all other loads are connected. In cases where measurements cannot be taken or when the installation is in the planning stage, the load inrush requirements should be calculated. Data on individual load inrush kVA and duration should be obtained from equipment manufacturers or estimated from the data in table 3-8. The maximum inrush current and effective inrush current can be calculated.

(4) Load voltage, number of phases, and frequency. The load voltage and frequency requirements determine the UPS system output voltage and frequency. Three-phase loads require a system with three-phase output regardless of the kVA rating required. However, when all loads are single-phase, a system with single-phase output is preferable up to a rating of 75 kVA. When the single-phase loads are higher than 75 kVA, a system with three-phase output is normally used. In such a case, the loads should be distributed among the three phases to minimize the phase unbalance effects on the inverter.

(5) Battery protection time. Battery protection time depends on the load type and functions. Generally, a battery with a minimum protection time of one minute is necessary for the initial operation of the inverter without support from the power supply source, i.e., during the walk-in time. There is no upper limit for the protection time. However, other considerations may limit the length of battery protection time. Examples are the loss of the environmental control support, which could limit the length of a computer operation time with power loss to 5, 10, or 15 minutes. In such a case, there is no need to select a battery protection time which can extend computer operating time beyond the time for which a computer system can operate before it must shutdown due to overheating.

b. Battery sizing. In order to properly size the battery, required discharge rate in kilowatt (kW)/cell, required protection time, end of discharge voltage, and ambient temperature should be determined.

(1) Discharge rate. For an UPS system battery, the discharge rate should correspond to the highest inverter input power required to produce rated output at minimum input dc voltage. The end of discharge voltage should be equal to or higher than the minimum dc input voltage required by the inverter to maintain rated performance. The minimum dc voltage required by the inverter is normally published by the manufacturer. The maximum dc power required by the inverter can be obtained from the manufacturer or can be calculated. In addition, it is recommended to include a margin of 30 percent for the required capacity to account for load growth and battery aging.

(2) Lifetime. The expected lifetime of batteries on UPS duty is usually stated in terms of years of service on continuous charge to an end of life defined as the failure to be able to deliver a certain percentage of rated capacity. Initial capacity (unless specified as 100 percent capacity) is usually in the range of 90 to 95 percent of rated capacity. This will rise to 100 percent capacity in normal service after several charge-discharge cycles. IEEE 450 recommends that a battery be replaced when its actual capacity drops to 80 percent of rated capacity; however, some manufacturers rate "end-of-life" at 50 percent of rated capacity. Obviously, the user needs to check the initial capacity rating, the service life period, and the aging characteristics given in the battery guarantee so as not to be unpleasantly surprised.

(3) End of discharge voltage. UPS batteries are not sized on so many ampere-hours of capacity for an 8-hour period. Battery voltage is not constant, so if the load requires a constant power output, which most UPS applications do, the current must increase as the voltage decreases. Consequently, the battery is sized to supply a specific kW rate (usually the maximum inverter kW requirement without recharging) for a specific period of time (usually 5 to 15 minutes) to a minimum specific end voltage and, for lead-acid types, at a maximum specific gravity (measured at 77°F).

(a) Lead-acid cells. A nominal system design may utilize minimum end voltage of 1.67 to 1.75 volts per cell and a maximum specific gravity of 1.215 at 77°F. The actual end voltage should be the voltage which the UPS manufacturer, battery manufacturer, or the system design requires, whichever is higher. In some cases, designs provide higher end voltages to meet design concerns. A higher specific gravity may result in a battery installation needing less space, but results in shorter life spans and higher cell losses and float voltages. The lower end voltage that manufacturers recommend may cause the UPS to go to static bypass or, by overstressing battery plates, shorten the life of the battery.

(b) Nickel-cadmium (ni-cad) cells. A nominal system design for ni-cad units will be to a minimum end voltage of 1.14 volts at 77°F with the actual end voltage to meet both manufacturers' and system design requirements. The specific gravity of a new cell will vary between 1.160 and 1.190 at 77°F, depending upon the manufacturer. Lower specific gravities are generally used in cells with larger electrolyte reserves. Higher specific gravities are typically used for low-temperature applications. The specific gravity will decrease slowly over the years because of evaporation and other effects, even though the surface of the electrolyte is probably covered with a protective layer of oil. Renewal will be necessary if the specific gravity decreases to 1.130 to 1.160, depending upon the manufacturer's instructions.

(c) Temperature correction. Ratings are at 77°F (25°C). Therefore, to determine specific gravity, which is temperature sensitive, a temperature correction factor must be applied. For both lead-acid and ni-cad batteries, add one point (.001) to the hydrometer reading for every 3°F above 77°F and subtract one point for every 3°F below 77°F.

(4) Ambient temperature. The usual controlled environment provided for batteries should eliminate temperature correction while a 100 percent UPS inverter capacity normally allows an adequate kW design margin. The life of a battery in comparison with an UPS system (which may be outdated and replaced in much less time) may mean that the aging factor is not of such great importance.

c. Computation sheets. The typical computation sheet in appendix B is intended for calculating the kVA rating and inrush capability of a single-phase static UPS system with static bypass switch. The methodology used in this computation sheet can be used to develop

computation sheets for other system configurations. For example, for a three-phase system, the step-by-step procedure should be followed for each phase. The system kVA rating should be three times the largest single-phase kVA obtained. For systems without a static transfer switch, the maximum inrush current obtained should be below the value at which the system reaches the current limit mode.

d. Static UPS system selection criteria. Selection of a static UPS system should be in accordance with certain criteria. The system output voltage and frequency shall be as required by the loads. The output shall be three-phase when any of the loads is a three-phase load, otherwise a single-phase system should be used for ratings up to 75 kVA. The system output voltage and frequency regulation and transient response shall meet the requirements of the most power-sensitive load(s). The system rated kVA at the specific site shall be equal to the load kVA plus a 25 to 30 percent margin. The system shall be capable of supplying the load inrush demand without reaching the current limit mode. The battery protection time shall not be less than one minute and shall not exceed the maximum time the load can be operated with the loss of the environmental support equipment as specified by the equipment manufacturer (normally in the range of 1 to 15 minutes).

3-3. Rotary UPS system ratings and size selection

Similar to static UPS systems, there are no standard ratings and performance characteristics for rotary UPS systems. Also, since the use of rotary UPS systems is much less common, the number of manufacturers offering rotary UPS systems is limited. Each rotary UPS system configuration may have unique performance characteristics. Performance characteristics of typical configurations are shown in table 3-9.

Table 3-9. Updated typical rotary UPS ratings

	Induction Motor Generator/ Kinetic Battery	Asynchronous motor generator/ induction coupling
Protection Time	12 s	2 s
Voltage Regulation	±1%	±1%
Voltage Drop or Rise for 50% Load Step Change from Full Load	±3% @ 1.0 pf ±4% @ 0.8 pf	±6%
Voltage Transient Recovery Time	150 ms to ±2%	250 ms
Frequency Regulation	±0.5 Hz	±0.5 Hz
Frequency Transient Recovery Time	0.5 s	0.5 s
Phase Angles, Unbalanced Loads up to 20 Percent	120° ± 1°	120° ± 1°
Harmonic Voltage	1.5 % THD (Ph-Ph) 2.5 % THD (Ph-Ph)	4% max.

a. Determining rotary UPS system rating. In order to properly size and select a rotary UPS system, the load kVA, load power factor, inrush kVA or current, load voltage, number of phases and frequency, required battery protection time (if battery supported UPS), maximum permissible frequency deviation (if inertia-driven UPS), and required ride-through time (if inertia ride-through UPS) should be determined. This information can be determined in the same manner as described in paragraph 3-2 for determining a static UPS system rating. The maximum permissible frequency deviation and required ride-through time is required for sizing the flywheel inertia as will be described in the following paragraph. The maximum permissible frequency deviation should be the maximum deviation tolerated by the most sensitive load. The required ride-through time depends

largely on the nature of the power supply source. It should be longer than the longest momentary interruption experienced or expected at the particular installation. The longest momentary interruption time is usually the duration of reclosing operations on the power supply distribution feeders. In addition, the nature and percentage of non-linear loads should be determined. This is necessary to insure that the system's level of voltage distortion when supplying such loads is acceptable.

b. Motor and generator ratings. Motor and generator ratings and performance characteristics are standardized by the National Electrical Manufacturers Association (NEMA) in ANSI/NEMA Publication MG-1, 1978.

(1) Synchronous motors. The NEMA rating structure of continuous duty synchronous motors is based on horsepower output, maximum ambient temperature for which motor is designed, speed at full load, frequency, number of phases, voltage, full load current, field current, excitation voltage, power factor, and locked rotor (starting) kVA.

(2) Induction motors. The NEMA rating structure of continuous duty induction motors is based on horsepower output, maximum ambient temperature for which motor is designed, speed at full load, frequency, number of phases, voltage, full load current, and lock rotor (starting) kVA.

(3) DC motors. The NEMA rating structure of continuous duty dc motors is based on horsepower output at base speed, maximum ambient temperature for which the motor is designed, base speed at rated load, armature voltage, field voltage, armature load current at base speed, and winding type - shunt, series, or compound.

(4) Synchronous generators. The NEMA rating structure at synchronous generators is based on kVA output, output power (kW), power factor, maximum ambient temperature for which the generator is designed, speed, voltage, full load current, number of phases, frequency, excitation current, and excitation voltage.

c. Flywheel sizing. The flywheel inertia is selected such that the stored energy is sufficient to supply the generator while operating at rated power for a duration not exceeding 0.5 second while keeping the speed from falling to maintain the frequency drop to a maximum of 0.5 Hz. The flywheel inertia plus the inertia of the coupled motor(s) and generator make up the total inertia of a rotary UPS system. The flywheel inertia is usually more than 95 percent of the total inertia and the motor's and generator's inertias can be neglected. The required flywheel inertia (WK^2) can be calculated as follows.

$$WK^2 = H\,\frac{kW\,x10^6}{(0.231)(n)}\ \left(lb - ft^2\right)$$

where: kW = generator rated power (kW)
n = generator rated rotational speed (r/min)

The inertia constant (H) is determined based on the required ride-through time and minimum frequency as follows.

$$H = t \Big/ \left[1 - \left(\frac{F_{\min}}{f_r}\right)^2\right]$$

where: t = required ride-through time (s)

F_{min} = minimum frequency required at the end of the ride-through time (Hz)

f_r = generator rated frequency (Hz)

Theoretically, a flywheel can be selected to provide any ride-through time. However, practical and economical considerations limit the ride-through time to around 0.5 second. High flywheel inertia causes a long motor starting time. During the starting time, the motor's high starting current can cause unacceptable or excessive motor heating. Also, due to the flywheel's heavy weight and the long starting time, special bearings and lubrication methods may be required.

d. Rotary UPS system selection criteria. Selection of a rotary UPS system should be in accordance with certain criteria. The system output voltage and frequency shall be as required by the loads. The output should preferably be three-phase except for small systems (5 kVA and smaller) where single-phase systems may be used. The system output voltage and frequency regulation and transient response shall meet the requirements of the most power sensitive load(s). The system rated kVA at the specific site shall be equal to the load kVA plus a 10 to 15 percent margin. The system shall be capable of supplying the load inrush demand without voltage and frequency deviations beyond the required tolerances. The inertia-driven ride-through configuration should be considered at sites where the power distribution system has a high reliability and long duration interruptions are not frequently experienced. The battery supported inertia configuration should be considered at sites with frequent long duration power interruptions. The battery protection time shall not be less than one minute and shall not exceed the maximum time the load can be operated with the loss of the environmental support equipment.

CHAPTER 4

INSTALLATION AND TESTING OF UNINTERRUPTIBLE POWER SUPPLY (UPS) SYSTEMS

4-1. Construction and installation of static UPS systems

The construction and installation of the UPS are critical to its proper operation.

a. Construction features of static systems. There are several construction features about the UPS that contribute to the system as a whole.

(1) Charger/inverter. In addition to the basic components of the charger/inverter, an input transformer is normally connected at the charger for isolating the charger components from the power source. Also, surge suppression devices are used at the input to protect the charger components from high transient voltages. Various protective and control devices may be used on static UPS systems including a thermal magnetic circuit breaker at the system alternating current (ac) inputs (with indicating lights to indicate the breaker open/close position), devices to detect and alarm loss of ac input, and devices to detect and alarm low/high charger output direct current (dc) voltage. The power and control components are normally mounted in one or more free standing, sheet metal cabinets. One cabinet may be adequate for smaller systems. The cabinets are normally designed for front access. All components can be inspected or removed from the front of the cabinet by opening a hinged door. Meters, indicating lights, control switches or pushbuttons, and adjustment potentiometers may be located inside the cabinet or mounted on the hinged door. A static UPS with a power range of 150 to 750 kVA is shown in figure 4-1. Electronic control components are normally assembled in a modular construction with drawout removable modules. The cabinet doors are provided with screened filtered openings for cooling. Cooling may be either by natural convection or by fans. Fans are typically used in larger systems. The cabinets are normally designed to allow power and control cables to enter from either the top or bottom.

(2) Batteries and racks for smaller systems. Batteries for smaller systems (50 kVA and smaller) may be mounted in cabinets or on open racks. Batteries used in cabinets are normally the valve regulated (VRLA) type sometimes referred to as "maintenance free" type. Also, the individual units normally have a voltage rating of 12 volts. Battery cabinets are supplied prewired with all inter-connections factory made. The use of battery cabinets is common for lead-acid batteries in smaller systems and for nickel-cadmium (ni-cad) batteries. Lead-acid batteries for larger installations are normally mounted on open racks. In open rack installations, the individual battery cells are mounted on a rack or group of racks specially constructed for this purpose. The racks are constructed of steel rails, frames, and braces. The battery cells rest on plastic channels. The rack is factory painted with acid resistant paints. The racks may be of a variety of configurations as shown in figure 4-2. The battery rack configuration is usually determined by the cell dimensions, the number of cells, and the space available. Lead-acid cells are connected by specially designed inter-cell connectors made of lead-plated flat copper. Ni-cad cells can be connected by specially designed inter-cell connectors made of flat steel. Inter-tier, inter-rack, and inter-row connectors are also specially fabricated for the cell and rack type used.

b. Installation requirements. The static UPS system should be located indoors in a clean, dust free, low humidity location. The charger/inverter cabinets may be located in the same room with

the battery. However, for larger systems, it is preferable to locate the battery in a separate room for additional safety. The charger/inverter cabinets should be located as close as practical to the battery to minimize the voltage drop in the battery leads. Personnel access should be limited to the battery and charger/inverter. The manufacturer's instructions and National Electrical Code (NEC) instructions shall be consulted for access and arrangements. The UPS cabinets should not be located directly adjacent to office space and work areas unless provided with acoustically treated enclosures. Although the noise level of static UPS systems is low, the humming caused by the electromagnetic components (transformers and reactors) may be irritating. Finally, since the static UPS system causes power supply source voltage distortion, the effect of distortion on other equipment supplied from the same bus as the UPS system should be taken into consideration. To eliminate the effect of voltage distortion on other equipment, it is advisable to supply larger UPS systems by a dedicated distribution transformer whenever possible. When the use of a dedicated transformer is not feasible and a double-ended substation is available, the loads should be distributed between the two buses as shown in figure 4-3 to minimize the effect of voltage distortion. By this arrangement, when the UPS goes to bypass, the loads are supplied from a distortion free source through the transfer switch.

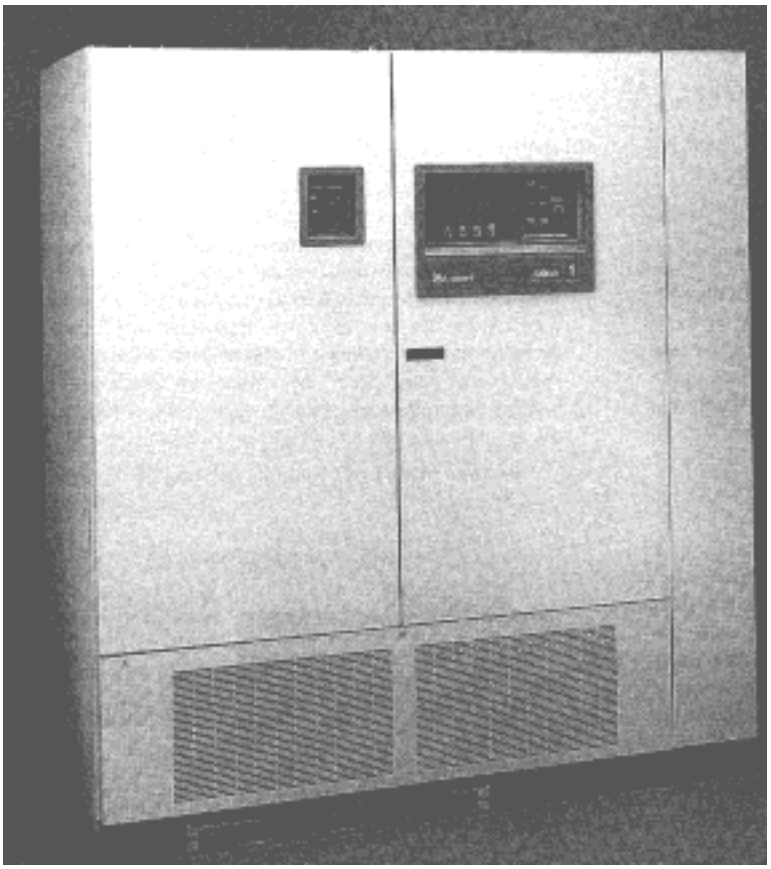

Figure 4-1. Static UPS system 150 to 750 kVA (courtesy of Liebert)

(1) Charger/inverter cabinets. The charger and inverter cabinet assemblies shall be installed on a level surface. The assemblies may be bolted to the floor if required by the manufacturer. The cabinets should be in a convenient location for periodic inspection with sufficient front clearance for front door opening and access to the cabinet internals. Sufficient

rear and overhead clearances should also be maintained for removing rear panels when necessary and for ventilation. The minimum clearances should be as recommended by the manufacturer. The charger/inverter cabinets are normally factory wired. The field wiring consists of connecting the ac input to the rectifier/charger, the alternate ac source to the bypass equipment when used, the battery leads, and the connections to the output distribution panel. The positive and negative battery leads should preferably be run in separate non-metallic conduits. The cables from the normal and the alternate ac sources should also be run in separate conduits to avoid common failures. The room temperature should be maintained below 104°F for maximum equipment life. However, when batteries are installed in the same room as the rectifier/inverter cabinets, a lower room temperature (approximately 77°F) is desirable. A ventilation system may be required

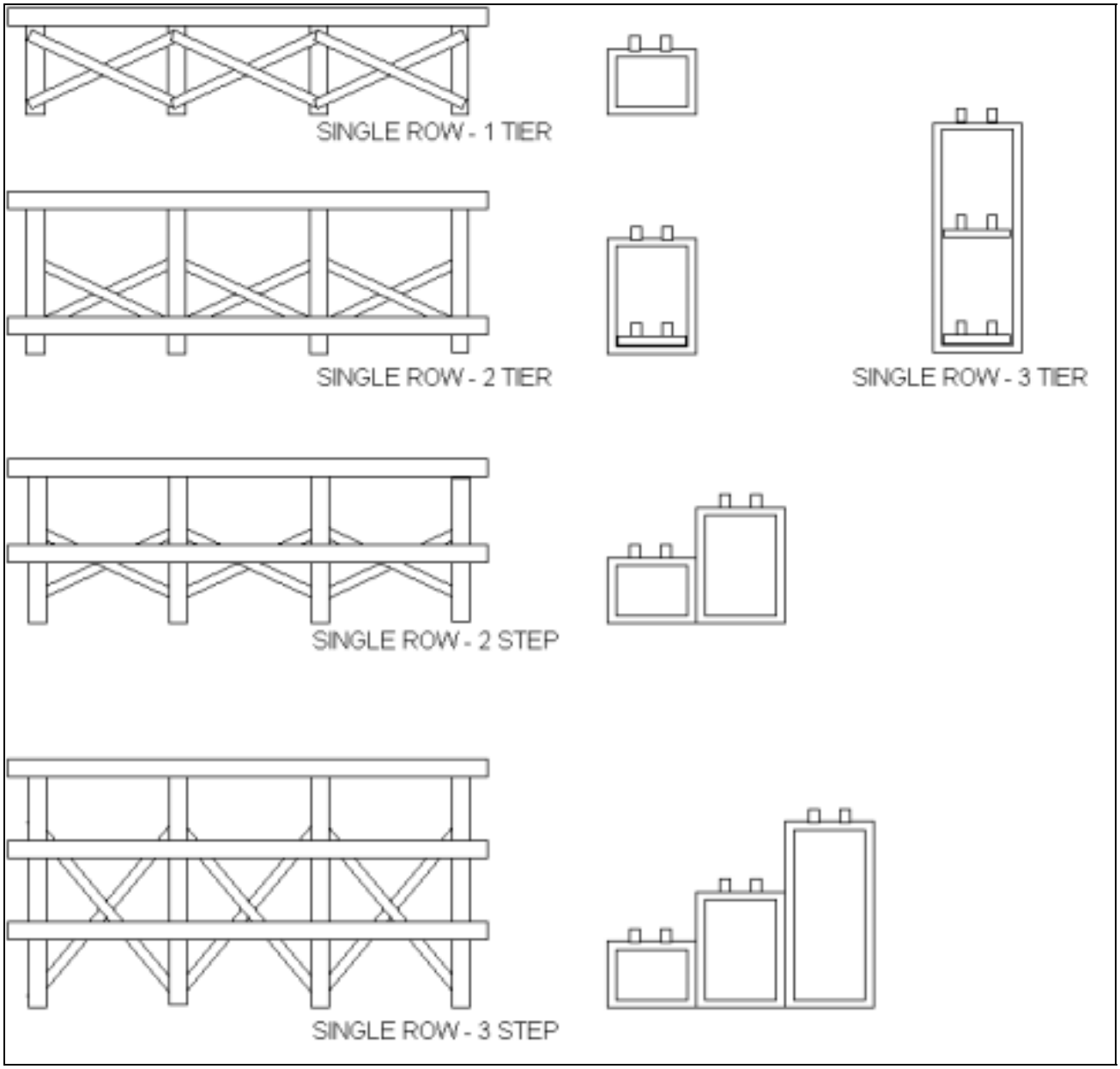

Figure 4-2. Various battery rack configurations (courtesy of Excide Technologies)

to remove the heat load generated by the UPS system and maintain the required room temperature. The approximate heat load generated by the UPS in BTU/hr is:

1500 x UPS kVA for systems rated up to 20 kVA
1000 x UPS kVA for systems rated above 20 kVA

The need for a ventilation system should be determined on a case-by-case basis. Consideration should be given to the load carrying capacity of the floor where the charger/inverter cabinets are to be installed. Also, the availability of freight elevators with adequate capacity for moving large systems in office buildings should be ensured.

(2) Batteries and racks for larger systems. The battery racks should be located to allow access to the cells for periodic maintenance. It is recommended that the battery be installed in a clean, cool, dry location. Cells should not be exposed to heating units, strip heaters, radiators, steam pipes, or sunlight. Any of these conditions can cause a serious electrolyte temperature variation among cells within a battery. In large battery installations, whenever possible, a floor drain with acid or alkaline proof piping to a collection tank (depending on the cell type used) should be located near the rack to permit draining any electrolyte that may spill accidentally. However, it may be desirable to use a pan directly underneath the batteries. Due to the excessive weight of lead-acid batteries, it should be ascertained that the battery room floor has a weight carrying capacity that exceeds the load of the batteries and racks. The battery room should be provided with sufficient ventilation to prevent hydrogen gas accumulation in the room air. The ventilation equipment should be such that the battery room air is changed 2.5 times each hour. The objective of the room ventilation is to keep the hydrogen concentration in the room air to less than 1 percent by volume. If it is required to establish that the ventilation of the battery room is adequate, then it is necessary to calculate the rate of evolution of hydrogen gas in the room. The following method is used.

$$C = \frac{FC}{1000} \times \frac{AH}{100} \times K \times N$$

$$A = \frac{C}{0.01}$$

Where:	C	=	Cubic feet of hydrogen per hour
	FC	=	Float current, in milliamperes per 100 AH (temperature compensated)
	AH	=	Ampere hours
	K	=	Constant – 1 AH = 0.016 cubic feet of hydrogen
	N	=	Number of cells
	A	=	New air required
	0.01	=	1 percent maximum concentration of hydrogen

It is also important to maintain the average ambient room temperature at around 77°F. Higher average ambient temperatures substantially shorten the life expectancy of lead-calcium batteries. An average ambient temperature of 95°F shortens the life expectancy by about 50 percent. The NEC insulation restrictions require that battery strings rated over 250 volts be installed in groups having a total nominal voltage of not over 250 volts on any one rack. Sectionalizing protection for each 250 volt group is highly recommended. For battery strings rated under 250 volts, batteries having rubber jars must be sectionalized into groups rated at 150 volts or less. Vented alkaline-type batteries in conductive material jars cannot be installed with more than 20 cells (24 volts) in any one tray. For safety, an eyewash and quick drench facilities shall be located nearby.

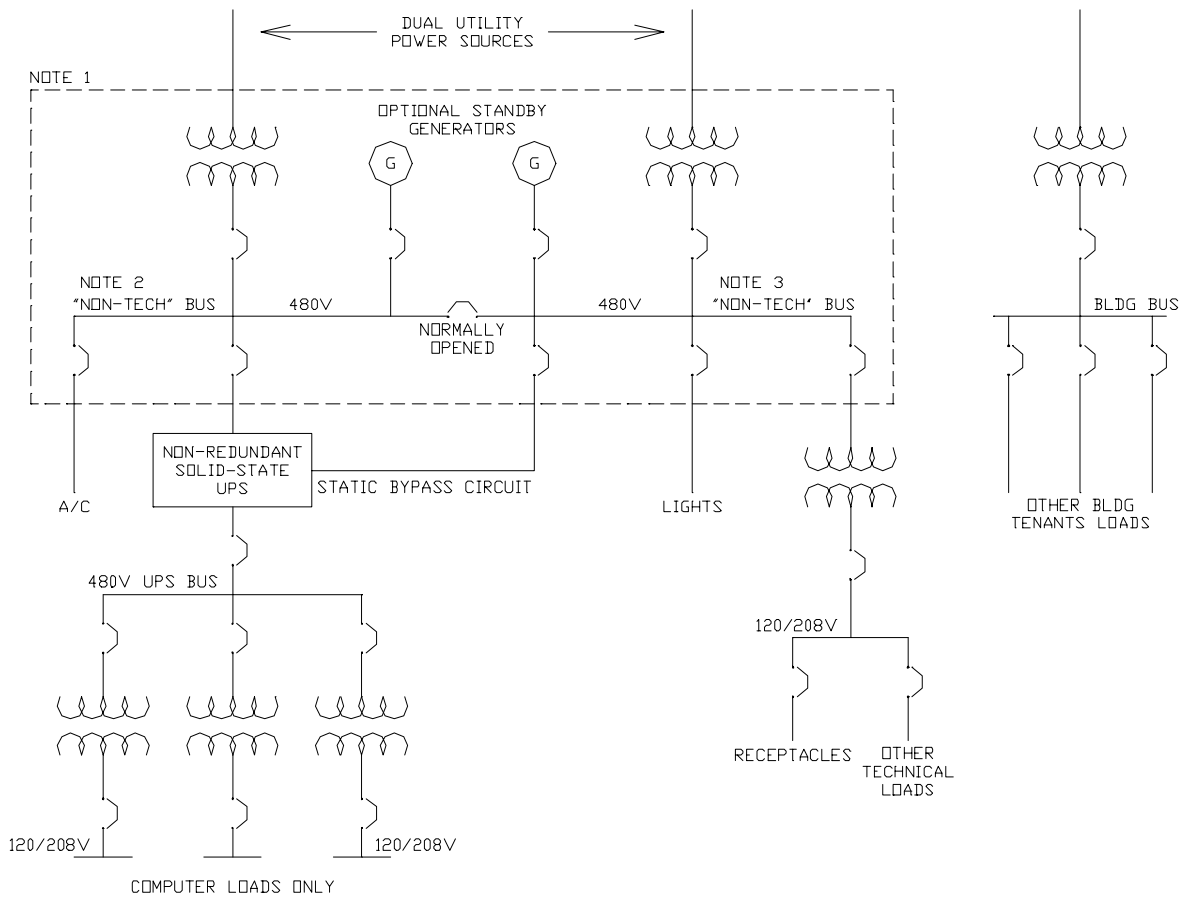

NOTES

1. Utility source is double-ended substation connected in secondary selective configuration with either BUS capable of carryingthe entire load.

2. "NON-TECH" Bus feeds large cyclic motor loads or harmonic (UPS rectifier) loads.

3. "TECH" Bus feeds non-cyclic loads, light receptacles and other techincal loads.

4. Computer loads of different types or manufacturers are isolated utilizing Computer Power Distribution Centers equipped with shielded transformers, transient supressed branch circuit breakers and meterings.

DNT/Ups-tm-1

Figure 4-3. Double-ended substation connected in secondary selective configuration

4-2. Construction and installation of rotary UPS systems

The construction and installation of the UPS are critical to its proper operation.

a. Construction features of rotary systems. There are several construction features about the UPS that contribute to the system as a whole.

(1) Motor-generators (M-G) and controls for rotary systems. The M-Gs used in rotary UPS systems are normally of the horizontal type. The M-Gs can be built into a single frame or in separate frames coupled together and mounted on a common base. The M-G can be mounted without enclosures or enclosed in a sheet metal cabinet. In constructions without an enclosure, the control and monitoring devices are installed in one or more small cabinets mounted on the M-G frame(s). In constructions with an enclosure, the control and monitoring devices are normally mounted in a free-standing cabinet attached to the M-G enclosure. An inertia-driven ride-through system with a synchronous motor rotary UPS with a power range of 200 to 10,000 kVA is shown in figure 4-4. In addition to the M-G, various protective and control devices may be used on rotary systems including a thermal magnetic circuit breaker at the ac motor input

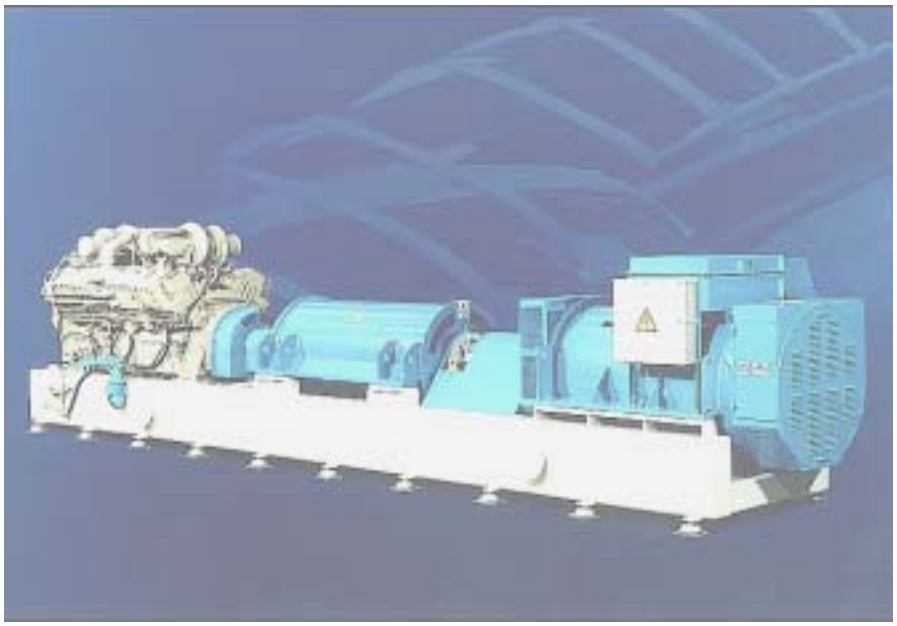

Figure 4-4. Rotary UPS system 200 to 10,000 kVA (courtesy of HITEC Power Protection)

(with indicating lights to indicate the breaker open/close position), an ac contactor used along with the input circuit breaker, a thermal magnetic circuit breaker with ac contactor and indicating lights at the generator output, and a dc contactor at the dc motor input in systems with a dc motor and a backup battery. Relays to detect and alarm loss of ac input/output and loss of dc input in systems with a backup battery may also be provided. The control cabinets are normally designed for front access. All components can be operated, inspected, or removed from the front of the cabinet by opening a hinged door. Meters, indicating lights, control switches or pushbuttons, and adjustment potentiometers may be located inside the cabinet or mounted on the hinged door. The cabinet doors are provided with screened filtered openings for cooling. Cooling is normally by natural convection. Enclosure-mounted cabinets are normally designed to allow power and control cables to enter from the top. Free-standing cabinets are designed to allow the power and control cables to enter from either the top or the bottom. In some designs the motor and generator

are vertically mounted on a common vertical shaft to reduce the required floor space. Reducing the floor space may also be accomplished by stacking the motor and generator and coupling their horizontal shafts using pulleys and belts. Some designs are also available with a common motor and generator in one rotor to optimize the machine size.

(2) Batteries and racks for rotary systems. Construction of rotary UPS system batteries and racks is the same as the static UPS system batteries discussed in paragraph 4-1a(2).

b. Installation requirements for rotary systems. The rotary UPS system can tolerate a larger range of environmental conditions than the static UPS. The room may range from temperatures of 5° to 40° C while operating, -20° to 80° C while not operating. The humidity may range from 0 to 95 percent non-condensing for all temperatures mentioned. The UPS is suitable for installation in industrial electrical environments. Where applicable, the charger/inverter cabinets should be located as close as practical to the battery to minimize the voltage drop in the battery leads. Also, the UPS shall be close to the protected load if possible. The UPS cabinets should not be located directly adjacent to office space and work areas unless provided with acoustically treated enclosures.

(1) M-G and controls installation. The M-G and cabinet assemblies shall be installed on a level surface. The assemblies may be bolted to the floor if required by the manufacturer. The cabinets should be in a convenient location for periodic inspection with sufficient front clearance for front door opening and access to the cabinet internals. Sufficient rear and overhead clearances should also be maintained for removing rear panels when necessary and for ventilation. The minimum clearances should be as recommended by the manufacturer. The rotary UPS can tolerate a range of temperatures of 5° to 40° C while operating, and -20° to 80° C while not operating. However, when batteries are installed in the same room, a lower room temperature (approximately 77°F) is desirable. The need for a ventilation system should be determined on a case-by-case basis. Consideration should be given to the load carrying capacity of the floor where the rotary UPS is to be installed. Also, the availability of freight elevators with adequate capacity for moving large systems in office buildings should be ensured.

(2) Battery and rack installation for rotary systems. Installation of rotary UPS system batteries and racks is the same as the static UPS system batteries discussed in paragraph 4-1b(2).

4-3. Power distribution and equipment grounding and shielding requirements

An UPS system, whether static or rotary, single-phase or three-phase, has a single output. The UPS system, however, usually supplies a variety of loads, each of which should be independently protected so that a fault on one circuit will not cause loss of all others.

a. Power distribution equipment. There are three critical functions of a well designed UPS ac distribution system. First, short circuit protection of all underground conductors; second, isolation of panel pull-down during a branch fault; and third, isolation of the critical loads from electrical noise coupled through the static bypass. The power distribution system will usually consist of a panelboard, with circuit-breakers or fuses to protect the individual branch circuit conductors which will usually be run in conduits dedicated to these uninterruptible circuits.

(1) Panelboards. A panelboard consists of a sheet steel housing containing a set of bus bars, enclosed in a molded insulated housing, which also provides mounting for the branch circuit protective devices. A single-phase UPS will require two bus bars while a three-phase UPS will require three. A neutral bar, insulated from the enclosure but otherwise bare, will be provided in

both single-phase and three-phase boards. A front panel, usually screwed to the enclosure, contains a door for access to the protective devices while completely enclosing the wiring and terminals.

(2) Circuit breakers. Molded-case circuit breakers are either plugged into or bolted onto auxiliary bus bars attached at right angles to the main bus bars. Circuit breakers may be single-pole or two-pole in single-phase boards; three-phase boards may in addition contain three-pole breakers. Manual switching as well as automatic overcurrent tripping of the various branch circuits is provided by the circuit breaker, which disconnects all ungrounded circuit conductors simultaneously.

(3) Fused switches. As an alternative to circuit breakers, fused switches may be used. The switch provides for manual control and the fuse provides automatic overcurrent protection. Switches may have one, two, or three poles as with circuit breakers.

(4) Neutral bus. An UPS system will usually supply at least some line-to-neutral loads, and a neutral bus will be provided. This bus contains provision for both a main neutral conductor and a grounding conductor, as well as terminations for the branch circuit neutral conductors. The neutral bus must not be grounded to the enclosure, either accidentally or intentionally, in spite of the provision of a grounding terminal. The neutral ground is applied at the UPS and at the bypass source and must not be duplicated at the panelboard. Also, in a three-phase UPS system with a transfer switch, the neutral conductor should not be opened with the transfer switch.

(5) Coordination of protection. When a fault (or short circuit) occurs on a branch circuit, the branch circuit breaker or fuse must isolate the fault before the UPS protective devices operate and trip the entire system. When this condition is fulfilled, the protection system is said to be coordinated. Fuses of different ratings can be coordinated, so a main panelboard may supply a downstream panel if necessary, however, it rarely is necessary and should be avoided. Molded-case circuit breakers are instantaneous in action at currents above 8 to 10 times their continuous current rating. Since the UPS has limited output current, additional power for clearing fault currents rapidly may be provided from an alternate high power source by the use of a static switch. When a fault occurs on any branch circuit, the inverter reaches the current limit condition and the bus voltage falls almost to zero, thus depriving all branch circuit loads of power. The permissible duration of this loss of power must be longer than the clearing time of the breaker plus the transfer switching time in the UPS if the coordination is to be obtained.

(a) Branch circuit breakers. Branch circuit breakers are selected based upon the voltage rating, the normal full load current of each branch circuit load (continuous and intermittent loads), the inrush current and its duration for each branch circuit load, the maximum time each connected load can tolerate a loss of voltage without failure (time for failure), and the available short circuit current at the uninterruptible ac main bus through the inverter or the by-pass circuit when a static transfer switch is used (to be obtained from the UPS system vendor or calculated).

(b) Fuses. Like circuit breakers fuses must have adequate voltage rating. Select the fuse ampere rating for each branch circuit to be as close as possible to the full load current of the connected load. Check from the fuse melting curve that the fuse melting time at a current equal to the connected load inrush current is longer than the duration of the load inrush current. If this condition is not satisfied, increase the fuse size as required. The branch circuit fuse with the largest rating shall have a clearing time which when added to the static transfer switch total

transfer time (normally 4 milliseconds (msec) or less) shall be less than the time the most critical load can tolerate a loss of power.

b. Grounding. The usual electrical power system utilizes two grounding methods; their purposes are quite different. System grounding is the intentional grounding of the neutral point of devices to provide equipment protection by suppressing transient and sustained overvoltages caused by fault conditions. Equipment grounding is provided as protection against accidental grounds by interconnecting a low-impedance path from all noncurrent-carrying metallic parts, thus minimizing potential gradients while ensuring sufficient fault current to trip protective devices.

(1) System grounding. The neutral of a single-phase, three-wire system and of a three-phase four-wire system should always be grounded. As explained in paragraph 4-3a(4), the neutrals of the UPS and of the bypass source should be grounded and not the neutral bar in the distribution panel board.

(2) Equipment grounding. For safety reasons, all electrical equipment enclosures, including metallic conduits, must be effectively grounded per the NEC. Although all raceways and enclosures are bonded together to form a continuous ground path, grounding of enclosures to the nearest ground point is recommended. The ground point may be a structural member which is part of a bonded and grounded network of steel beams and columns, a ground conductor, or to a ground rod driven into earth. The connection between the equipment enclosure and the ground point should be as short as possible to achieve the maximum in noise reduction, particularly at the higher frequencies.

(3) Single point grounding. In addition to grounding the system neutral to facilitate ground fault isolation and grounding the equipment enclosures to avoid the hazard of electrical shocks, the grounding system should minimize the generation of unwanted noise. The generation of unwanted noise can be minimized by equalizing the voltage to ground of all the system components. This is done by establishing single-point grounding. The single-point grounding is established by connecting the grounding conductors of all the system component enclosures to the power source neutral grounding point as shown in figure 4-5. For the single-point grounding system to be effective, the equipment grounding conductors should be as short as possible. This requires that the UPS system be located adjacent to or in the same room with the supplied equipment. In installations where this cannot be accomplished and the UPS system is located away from the loads, an isolation transformer should be used. The isolation transformer is interposed between the UPS output and the loads and should be located in the same room with the supplied loads. The isolation transformer grounded secondary neutral is used as the grounding point to connect all the equipment grounding conductors.

(4) Ground loops and multipoint grounding. The single-point grounding system should be used whenever feasible. However, within very large systems the use of a single-point grounding may not be practical. The system may be made of subsystems each supplied from different power sources with separate central grounding points. This situation is often in installations where data terminals and remotely located printers are located outside the computer room. In such installations the different central ground points may have different potential to ground and ground loops are established as shown in figure 4-6. Such ground loops can create a path for

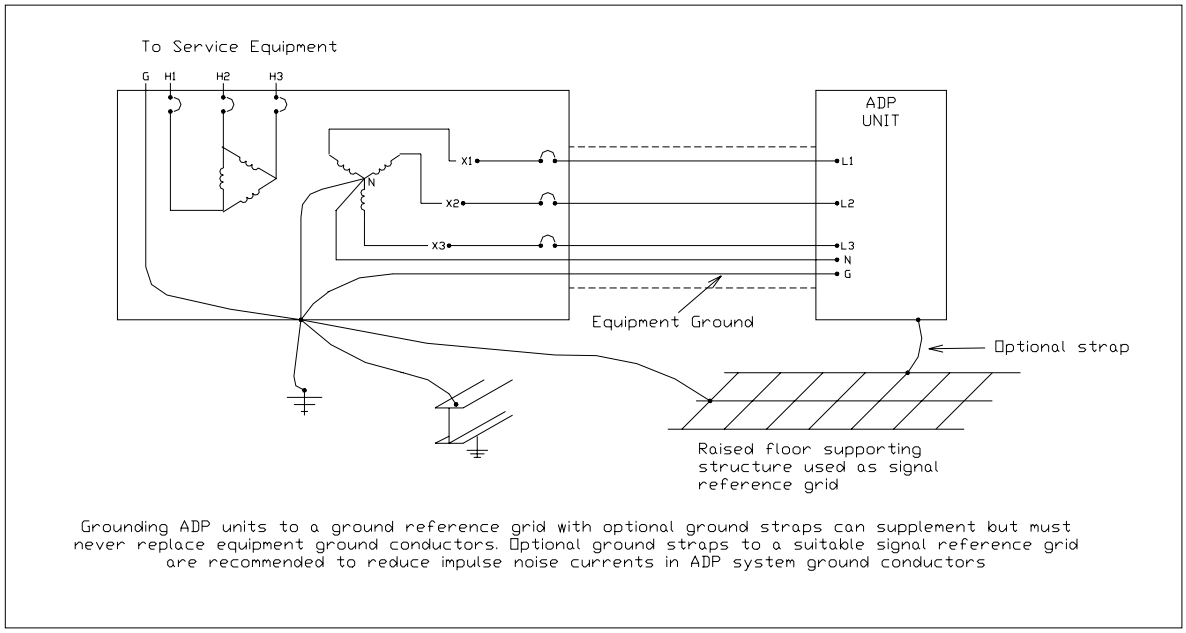

Figure 4-5. Single-point grounding example
[Reproduced from Federal Information Processing Standards Publications (FIPS pub) 94]

unwanted noise through the data links between the different components. Ground conductors of low resistance interconnecting the separate central grounding points shunts some of the noise current away from the data cable as shown in figure 4-6.

c. Computer power centers. A computer power center is a self-contained unit which can be located in a computer room to distribute the power from the UPS system to the loads. It contains an isolation stepdown transformer, output circuit breakers, and terminations for main input power cable and output cables. A computer power center may also contain a power monitoring panel which monitors the input/output power and system faults and records power disturbances. The contained isolation transformer in a computer power center isolates noise that may be produced in the power cable from the UPS output and allows establishing an effective single-point grounding system. Additionally, the output cables have specially fabricated grounding wires which tie the equipment enclosures to the single-point ground through plug-in connectors. There should be no other grounds on the neutral conductors which must be insulated for their entire length, including the wiring in the equipment supplied by the branch circuits.

d. Shielding. Low-level signal cables to instruments should never be run in the same raceway as power cables. While signal (or instrumentation) cables are usually shielded and/or twisted to reduce noise pickup, it is practically impossible to provide shielding of power cables to eliminate transmission of low frequency energy. Using grounded metal enclosures, such as conduit or solid tray, for all the distribution circuits will eliminate most of the higher frequency energy radiated by the power cables.

e. Radio frequency interference (RFI). Shielding as described in paragraph 4-3d. above effectively eliminates the RFI that may be caused by harmonics in the UPS output. The RFI effects that may be caused by radiated noise from the UPS components can be minimized by maintaining adequate space between the UPS and susceptible equipment. A spacing at

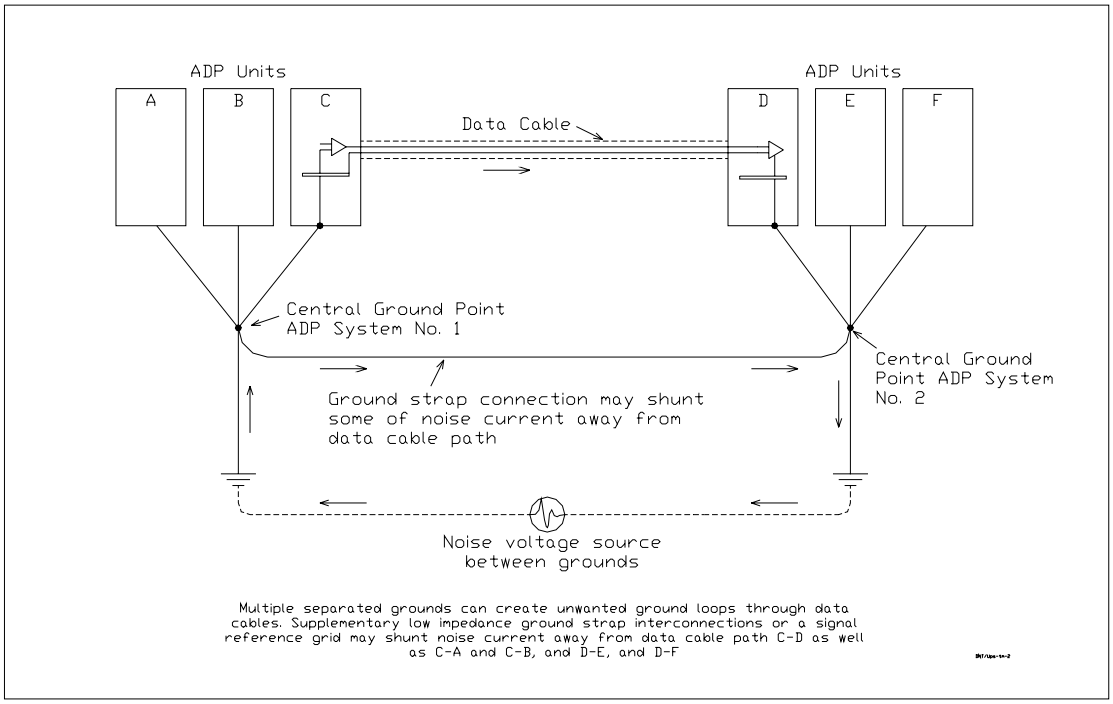

Figure 4-6.. Multipoint grounding example
[Reproduced from Federal Information Processing Standards Publications (FIPS pub) 94]

25 feet is considered adequate in most applications. Also, a suppression plate attached to the junction box located in the computer room for connecting the incoming power cable to the local distribution panel can be used to attenuate the radio frequency (RF) noise which may propagate along the incoming power cable.

*f. Noise and noise reduction met*hods. Noise is unwanted current and/or potential induced in the signal cables by adjacent sources. Noise can be induced in the signal cable in the following two modes. Differential mode, where the induced noise causes the potential of one side of the signal path to change relative to the other side. Common mode, where the induced noise appears between both signal leads and the common signal reference ground and causes the potential of both sides of the signal path to change simultaneously and by the same amount relative to the common reference ground. Noise is generally induced by electromagnetic coupling, electrostatic coupling, and ground potential differences. Noise reduction methods are highly specialized and are specific to the application. They also depend on the installation configuration, the proximity and nature of sources of interference, frequency of the interference signals, etc. However, noise can generally be reduced by providing proper grounding, avoiding ground loops, providing electrostatic and electromagnetic shielding of signal circuits, and providing separation of circuits.

4-4. Testing and start-up

The purpose of electrical testing on systems and their components is two-fold. The first is to check the installation of the equipment and perform component and systems tests to ensure that, when energized, the system will function properly. The second is to develop a set of baseline test results for comparison in future testing to identify equipment deterioration. The system should be initially checked for damage, deterioration, and component failures using specific component

checks, inspections, and tests defined by the equipment manufacturer. Then the interconnection of the system components should be checked, using de-energized and energized methods, to verify the proper interconnection and operation of the components, including on/off control, system process interlocks, and protective relaying functions. Once the above tests are complete, the system can be energized and operational tests and measurements should be performed. All steps and results of the testing should be carefully documented for review and for use in the future for comparison with the results of future tests. Many of the same component tests initially run will be performed at regular intervals as part of a maintenance program. The new results will be compared to the initial results, where variations may be indicative of problems like deterioration of insulation or dirty equipment. A test program will commence after completion of installation and will usually include field inspection and installation checks, de-energized component testing, verify instrument and relay operation and calibration, visual check of all wiring, continuity checking of control circuits, energized functional testing of control circuits, megger testing of power circuits, test of power circuit phasing, energizing of equipment, and service testing. If problems are found during the testing, an analysis should be performed, and a repair and retest should be performed that is approved by the manufacturer, engineer, and system operator. Many of these initial tests will be repeated periodically as part of the system maintenance program depending on the load conditions, duty cycle, environmental conditions, and the critical nature of the equipment. Because of this, the completeness and clarity of the test reports is important as they supply baseline data for comparison with the results of the maintenance tests. Many tests on electrical equipment involve the use of high voltages and currents that are dangerous, both from the standpoint of being life hazards to personnel and because they are capable of damaging or destroying the equipment under test. Adequate safety rules should be instituted and practiced to prevent injury to personnel, both personnel who are performing the tests and others who might be exposed to the hazard. Also, the test procedures used should be designed to ensure that no intentional damage to equipment will result from the testing process. There are four categories of tests for electrical equipment: factory, acceptance, routine maintenance, and special maintenance. Factory tests are performed at the factory to prove the equipment was manufactured properly and meets specific design parameters. Acceptance tests are also proof tests performed on new equipment and systems usually after installation and before energization. They are run to determine whether the equipment is in compliance with specifications, to establish benchmarks for future tests, to determine the equipment was installed without damage, and to verify whether the equipment meets its intended design operation and limits. Routine and special maintenance tests are run after the equipment has been in service for a certain amount of time to determine the degree of deterioration of certain equipment physical parameters as operating time increases. Routine tests are performed on a periodic basis and special tests are performed on defective equipment to help determine the cause of a failure and/or the extent of the damage. The same type of tests and measurements are performed for all of the categories using different voltage values. The acceptance tests are usually run at 80 percent and the maintenance tests are usually run at 60 percent of the factory test voltage values to help indicate deterioration without being destructive. The following paragraph discusses the acceptance testing. The routine and special maintenance testing is discussed in chapter 5. Acceptance testing is a system verification and functional performance test which should be performed on the UPS system. These tests will include installation inspections, individual component testing, testing on wiring, control and interlock functional checks, equipment energization and system operating measurements, and functional checks.

a. Installation inspection. Field inspection and installation checks include the inspection of the component nameplates, inspection of components for damage and cleanliness, inspection of insulators for cracking, inspection of anchorage and grounding, sizing check of fuses and breakers, alignment and adjustment checks, mechanical operation and interlock checks,

lubrication application, verification of insulating liquid or gas level or pressure, and verification that local safety equipment is in place.

(1) UPS. The UPS system shall be inspected for completeness of assembly, verification of nameplate, sizes and settings against drawings, loose parts and insulation damage, and proper settings.

(2) Battery. The battery should be inspected for completeness of assembly, verification of nameplate, sizes and connection against drawings, loose parts, leaks or damage, electrolyte level (flooded batteries), and vents sealed and plugs installed (if applicable).

(3) UPS switchboard. The UPS switchboard should be inspected for completeness of assembly, verification of nameplate, sizes and settings against drawings, and loose parts and insulation damage.

(4) Motor inspection. The motors should be inspected for completeness of assembly, verification of nameplate, sizes and connection against drawings, loose parts, foreign materials or damage, check insulation type, and alignment of motor with generator.

(5) Generator inspection. The generators should be inspected for completeness of assembly, verification of nameplate, sizes and connection against drawings, loose parts, foreign materials or damage, proper mounting and grounding, and alignment of motor with generator.

b. Individual component testing. De-energized component testing typically includes megger and insulation resistance testing of equipment and connections including grounds, turns ratio measurements, polarity tests, power factor or dissipation factor tests, overpotential tests, contact resistance measurements, operation time travel analysis, battery and cell voltage measurements, charger/UPS/generator current and voltage measurements, and equipment/systems impedance or resistance tests. The following components of the UPS system will be tested as follows.

(1) UPS systems. The static UPS system consists of the battery charger, inverter, battery, and static switch. In addition to these items the rotary UPS consists of a motor and a generator. These items are individually listed.

(2) Battery chargers. A battery charger is an electronic device that converts ac power to dc power. The charger supplies this dc power to the battery. As with all electronic devices, this device should not be megger tested. A visual inspection should be performed to verify the correctness of installations, supports, grounding, and wiring. The rating nameplate should be checked to ensure that both the ac supply to the charger and the battery to be connected corresponds to the charger's parameters. Check to ensure all shipping and other debris in and around the charger cabinet are removed. Check settings of the charger and calibrate per manufacturer's manual to match the battery (float and equalizing levels). If the battery charger has been factory set, check the charger float and equalizing voltage levels against drawings and specifications. If not, set the charger float and equalizing voltage levels to those listed on drawings and specifications. Before connecting to the battery, measure the output voltage provided by the charger and record. Verify that all charger functions and alarms operate correctly. Verification that the battery is connected to the battery charger properly is extremely important. The negative wire from the negative terminal of the battery must be connected to the negative terminal of the charger. Similarly, the positive wire from the positive terminal of the battery must be connected to the positive terminal of the charger. As with the interconnections

for all other equipment, the cables used should be megger tested as described in the paragraph 4-4.a.

(3) Inverter. The inverter is similar in construction to the charger. It converts dc power to ac power using solid-state electronics and should generally be tested using the same methods. Therefore, this device also should not be megger tested.

(4) Static switch. The inverter is similar in construction to the charger and inverter. It is constructed of solid-state electronics and should generally be tested using the same methods. Therefore, this device also should not be megger tested.

(5) Battery testing. The individual cell condition check includes visual inspection of cell integrity investigating evidence of corrosion at terminals, connections, racks, or cabinet. The general appearance and cleanliness of the battery, the battery rack or cabinet, and battery area including accessibility should be observed. The cells should be checked for cracks in cell or leakage of electrolyte as well as the integrity of the cover. Electrolyte should be added to any cell in which the electrolyte level is below the top of the plates. If the battery cells are not delivered filled, it is recommended that they be filled according to manufacturer's recommendations before installation on racks. Before installation, the voltage of each cell should be measured. The voltage measured should be equal to or less than 0.05 volts below the manufacturer's open circuit voltage. If it is not, the manufacturer should be contacted to determine the next course of action. The cell polarity for positive to negative connections should be checked. The battery should be assembled as shown on drawings. Each battery cell is then checked to ensure the electrolyte level is at the maximum level. The interconnection of the battery cells should be checked for polarity. The connector bolts should be checked to ensure that they have been tightened to the manufacturer's recommended torque values. The cell internal ohmic values and the inter-cell connection resistances are then measured. This is accomplished by applying a load across the battery and measuring the step change in voltage and current for each cell taken between the positive and negative terminal posts of adjacent cells as well as the battery as a whole. The ohmic value is the change in voltage divided by the change in current. The resistance values for each cell should be averaged and any interconnection that varies more than 10 percent or 5 $\mu\Omega$ over the average should be remade and then rechecked for its resistance value. These values shall become baseline values for comparison in future tests. The presence of flame arrestors, adequacy of battery support racks, mounting, anchorage, grounding, and clearances, ventilation of battery room enclosure, and existence of suitable eyewash equipment should be verified. After completion of the above inspections the battery is ready for charging. After charging, measure each cell voltage and total battery voltage (with charger in float mode of operation), ac ripple current, specific gravity, electrolyte temperature (visually check fill level), overall float voltage at the battery terminals, charger output current and voltage, and ambient temperature. Also check the condition of ventilation and monitoring equipment and the temperature of the negative terminal of each cell of the battery. When the battery is charged, use a voltmeter to check the polarity of the series connections. The total voltage should be measured both across the battery and between adjacent cells and should be compared to the specified voltage. The total voltage should approximately be the resultant of the quantity of cells multiplied by the typical cell voltage. A variation is an indication that the battery may be improperly assembled.

(a) Discharge test. For the acceptance test the discharge rate should be at a constant current or constant power load equal to the manufacturer's rating of the battery. The charging method used as a basis for published data is an important factor. For a stationary float application, data based on prolonged constant potential charging should be used. If constant current charging has been used to establish the published data, appropriate float charging

correction factors should be obtained from the manufacturer. Note that the test discharge current is equal to the rated discharge current divided by the temperature correction factor for the initial electrolyte temperature. Set up a load and the necessary instrumentation to maintain the test discharge rate determined above. Disconnect the charging source, connect the load to the battery, start the timing, and continue to maintain the selected discharge rate. If the charging source cannot be disconnected, the current being drawn by the load has to be increased to compensate for the current being supplied by the charging source to the battery. Read and record the individual cell voltages and the battery terminal voltage. The readings should be taken while the load is applied at the beginning and at the completion of the test and at specified intervals. There should be a minimum of three sets of readings. Individual cell voltage readings should be taken between respective posts of like polarity of adjacent cells so as to include the voltage drop of the inter-cell connectors. Maintain the discharge rate and record the elapsed time at the point when the battery terminal voltage decreases to a value equal to the minimum average voltage per cell as specified by the design of the installation times the number of cells.

(b) Capacity check. The capacity of the battery is checked using the following equation.

Percent capacity at the test rate at 25 ºC (77 ºF) = (t_a / t_s) x 100

Where: t_a is the actual time of the test to specified terminal voltage as corrected for temperatures

t_s is the rated time to specified terminal voltage

(6) Motor testing. Testing of motors will vary based on the size of the motor. Small size motors, less than 200 HP require mechanical testing and insulation resistance testing (megger). Medium size motors, between 200 and 5000 HP require mechanical testing, insulation resistance testing (megger), and polarization index testing. Large size motors, greater than 5000 HP require mechanical testing, insulation resistance testing (megger), polarization index testing, and overpotential testing (Hi Pot).

(a) Motor mechanical test. A mechanical test of the motor should be performed to check that the motor is free from interference. This is accomplished by first uncoupling the motor from the driven machinery. The motor shaft is then manually rotated. The shaft should rotate freely.

(b) Motor insulation resistance test (megger). This test is performed to ensure the insulation has no weaknesses. The test is performed utilizing a megohmmeter, either hand or power operated, with a voltage output of at least 1000 volts. The test should be conducted phase-to-phase and phase-to-ground. Test duration should be one minute. The insulation resistance is variable with temperature, thus the measured value should be corrected to the standard temperature as required. The recommended minimum values of insulation resistance are rated kilovolts (kV) plus 1 megohm for the stator winding (for example, 5.16 megohms for 4.16 kV winding) and 1 megohm for the rotor winding. While this is a guideline, the manufacturer's test manual shall include acceptance criteria for the test. Megger test are “go/no-go” tests.

(c) Motor polarization index test. The polarization index test is an insulation resistance test that lasts for 10 minutes. The insulation resistance is recorded after 1 minute, then again after 10 minutes. The polarization index is the quotient of the 10-minute and 1 minute

readings. After insulation resistance readings have been made, the test voltage is returned to zero and the insulation is discharged.

(d) *Motor overpotential testing (Hi Pot).* This test assesses the dielectric strength of the insulation of a generator. The dc over potential test is performed by applying a voltage and measuring the leakage current. The voltage applied during the acceptance test is a function of the equipment voltage rating as shown by the following equation.

dc acceptance test voltage = (2 x E + 1) x 1.7 x 0.75 kV, where E is the rated voltage in kV

The standard duration of the test is between 1 to 5 minutes. The dc acceptance test voltage is applied to each winding separately with the other windings grounded. The voltage is applied in steps. First, one third of the dc acceptance test voltage is applied. Leakage current readings are taken at 1 minute intervals for a maximum of 10 minutes. Then the voltage is increased in 1 kV intervals recording the leakage current at each step. Sufficient time shall be allowed between steps for the leakage current to stabilize. The data shall be plotted. Any sudden changes in the curve characteristics are an indication of impending winding failure.

(7) Generator testing. Testing of generators will vary based on the size of the generator. Small size generators, less than 200 HP, require mechanical testing, insulation resistance testing (megger), no load testing, and load testing. Medium size generators, between 200 and 5000 HP, require mechanical testing, insulation resistance testing (megger), polarization index testing, no load testing, and load testing. Large size generators, greater than 5000 HP, require mechanical testing, insulation resistance testing (megger), polarization index testing, overpotential testing (Hi Pot), no load testing, and load testing.

(a) Generator mechanical test. The clearance in the generator and exciter air gap should be checked. Uncouple the motor from the generator. Make sure the generator set turns over freely. Rotate the generator rotor by hand at least two revolutions to be sure there is no interference and it turns freely. Do not apply any mechanical force to generator fan when rotating generator rotor.

(b) Generator polarization index test. The polarization index test is an insulation resistance test that lasts for 10 minutes. The insulation resistance is recorded after 1 minute, then again after 10 minutes. The polarization index is the quotient of the 10-minute and 1 minute readings. After insulation resistance readings have been made, the test voltage is returned to zero and the insulation is discharged.

(c) Generator insulation resistance test (megger). This test is performed to ensure the insulation has no weaknesses. The test is performed utilizing a megohmmeter, either hand or power operated, with a voltage output of at least 1000 volts. The test should be conducted phase-to-phase and phase-to-ground. Test duration should be 1 minute. The insulation resistance is variable with temperature, thus the measured value shall be corrected to the standard temperature as required. The recommended minimum values of insulation resistance are rated kV plus 1 megohm for the stator winding (for example, 5.16 megohms for 4.16 kV winding) and 1 megohm for the rotor winding. While this is a guideline, the manufacturer's test manual shall include acceptance criteria for the test. Megger test are “go/no-go” tests.

(d) Generator over-potential test (Hi Pot). This test assesses the dielectric strength of the insulation of a generator. The dc over potential test is performed by applying a voltage and

measuring the leakage current. The voltage applied during the acceptance test is a function of the equipment voltage rating as shown by the following equation.

dc acceptance test voltage = (2 x E + 1) x 1.7 x 0.75 kV, where E is the rated voltage in kV

The standard duration of the test is between 1 to 5 minutes. The dc acceptance test voltage is applied to each winding separately with the other windings grounded. The voltage is applied in steps. First, one third of the dc acceptance test voltage is applied. Leakage current readings are taken at 1 minute intervals for a maximum of 10 minutes. Then the voltage is increased in 1 kV intervals recording the leakage current at each step. Sufficient time shall be allowed between steps for the leakage current to stabilize. The data shall be plotted. Any sudden changes in the curve characteristics are an indication of impending winding failure.

(e) No load test. This test will determine whether a problem exists in the generator or regulator system. The theory behind this test is as follows. The output voltage of a generator is dependent on its speed, design, load, and exciter input current. If the speed and exciter input are known, the output voltage at no load can be measured and compared to the design value. To conduct the test, verify that the generator is shut down and connect a voltmeter to the generator output. With no load on the generator (main breakers open) run the generator at rated speed and measure the generator output voltage. Shut the generator down and compare the voltage reading with the design value; if they match, the regulator is functioning properly.

(f) Load test. Following the no load test, perform a load test turning the generator off and attaching an ammeter to the output. Turn on the generator and add load until generator rated power is reached. Run the generator at full load for four hours, and check the temperature to ensure the unit is not overheating.

c. Visual and electrical wiring inspections. The termination of each cable, shown on the cable block and wiring diagrams, should be checked to insure each conductor matches the wiring and schematic diagrams. This is performed by yellow lining each connection from the schematic to the wiring diagram, visually inspecting each connection for cable number, wire number/color, and terminal, and checking point-to-point continuity or “ringing out” each wire from end to end including grounds.

d. Energizing and test of the UPS system. After installation and component testing, individual components of the UPS system should be sequentially energized from the source through the loads. As each item is energized, control functions, interlocks, and alarms should be checked for proper operation. Voltage, phasing, and current measurements should be made at each step. See figure 4-7.

(1) UPS (inverter/static switch). Verify the UPS is operational through the rectifier/battery charger and battery, and verify the battery is charged and on float. Measure the float voltage. Verify the UPS bus incoming breaker is open, inverters A and B breakers are open, and the static switch is switched to inverter A. Close inverters A and B input breakers, measure inverters A and B output voltage and read meters, and verify inverters A and B outputs are in phase. Verify static switch is in inverter A position, open inverter A incoming breaker and verify static switch switches to inverter B. Measure voltage and ensure a bumpless transfer is made. Close inverter A incoming breaker and verify static switch switches to inverter A. Measure voltage and ensure a bumpless transfer is made. Open rectifier/battery charger output breakers and battery breaker and verify that inverts A and B trip on low voltage.

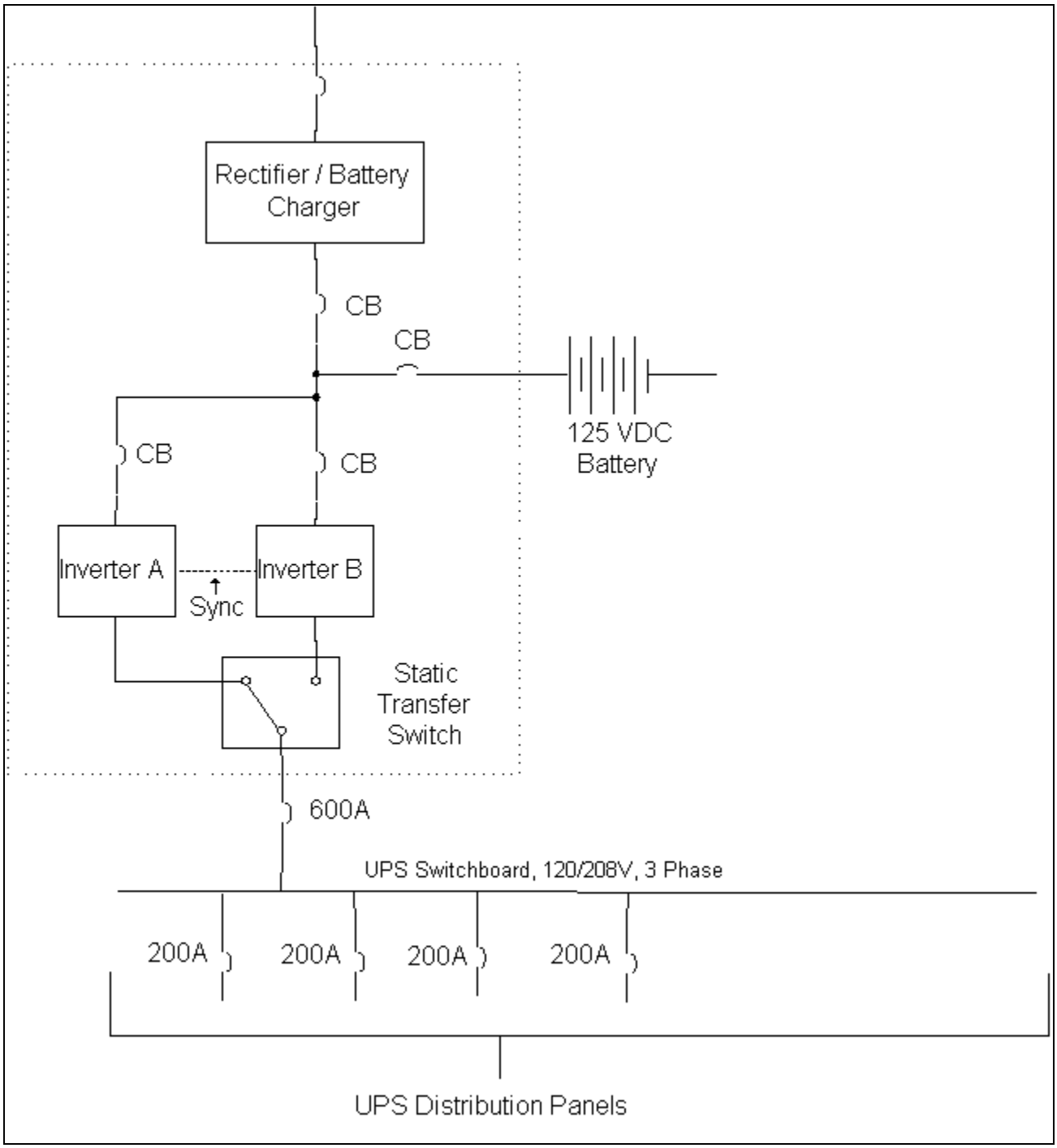

Figure 4-7. UPS distribution panels

(2) Loading UPS. Verify UPS is energized through static switch and all UPS loads are connected properly and ready to start. Close the incoming breaker to the UPS bus. Close the load breakers on the UPS bus sequentially. Measure voltage and read UPS meters at each step, and add load until the UPS reaches normal design load.

(3) *Utility trip test*. Verify the UPS is loaded and connected to the utility. Manually open the feeder breaker and verify the battery picks up load. Measure the current. Verify the transfer

switch transfers to diesel generator, the diesel generator starts and picks up load, and the battery returns to float mode. Measure voltage and current at UPS and ensure a bumpless transfer is made. Close the utility breaker. Verify the transfer switch transfers to the utility, the battery picks up load during transfer, the diesel generator stops, and the battery returns to float after the utility picks up load. Measure voltage and current at UPS bus and ensure a bumpless transfer is made.

(4) Inverter A to inverter B loaded transfer test. Verify the UPS is loaded and connected to the utility. Open inverter A incoming breaker and verify the static switch switches to inverter B. Measure voltage and current at UPS bus and ensure a bumpless transfer is made. Close inverter A incoming breaker and verify that the static switch switches to inverter A. Measure voltage and current at the UPS bus and ensure a bumpless transfer is made.

(5) Battery discharge test. Verify the UPS is loaded and connected to the utility, and notify the plant of pending UPS trip. Open the diesel generator breaker and block auto and manual start. Open the utility breaker. Verify the battery picks up load and measure battery voltage and current. Measure the UPS voltage and current and ensure a bumpless transfer is made. Operate the UPS from the battery until the battery minimum voltage is recorded (1 to 4 hours). Verify inverters A and B trip when the batteries reach minimum voltage. Notify the plant of pending UPS re-energization, reclose the utility breaker, close the diesel generator breaker, and return to auto start mode. Verify the battery is on float and charging, and measure the current. Verify when the battery is fully charged and record time to charge.

e. Test forms. Component and system test forms for the UPS, battery, UPS switchboard, motor, generator, UPS loading, utility trip, inverter transfer, and battery discharge test should be completed for each component and the system.

f. Possible failures and corrective actions. For general assistance in resolving equipment failures of the UPS, tables 4-1 to 4-7 may be referenced. Specific troubleshooting guides of equipment are provided by the manufacturer.

Table 4-1. Circuit breaker corrective action

Circuit Breaker Problem	**Areas to Check**
Breakers will not close/trip	Mechanical alignment/ Interlocks Relay and protective device settings and operation
Breaker trips inadvertently	Ground on cable or system Relay and protective device settings and operation System overload

4-5. Test equipment

The amount of test equipment available should be appropriate to the amount of local use and should meet safety requirements. The user in some cases may have had some control over the amount of diagnostic and monitoring equipment, plus the special tools specified for UPS systems. In other cases, off-the-shelf equipment might have been installed. The maintenance personnel may be primarily electrically oriented. Such personnel may have had some training on UPS systems maintenance at one time. In some cases, highly qualified electronically oriented technicians may be available because of the need to service computer equipment. Because of the variations in UPS equipment and maintenance capability, a hard and fast list of recommended

tools and test equipment cannot be given. Some general guidance is provided covering use of diagnostics, maintenance personnel, and ownership of equipment. Suggested checklists on maintenance test equipment are advisory only.

Table 4-2. Rectifier/battery charger corrective action

Rectifier/ Battery Charger	Areas to Check
No output voltage/ current	Input voltage/ breaker Rectifier (SCR) and rectifier fuse Input transformer Control board
Low output voltage	Dead input phase Rectifier (SCR) and rectifier fuse Voltage control settings or potential Control board
High output voltage	Input voltage high Voltage control settings or potential Control board
Output voltage not adjustable	Voltage control potential Control board
High output current	System overload/ short Current limit setting Control board
Low output current	Current limit setting Control board

Table 4-3. Battery corrective action

Battery	Areas to Check
Low battery voltage/ current/ capacity	Battery and cell connections Electrolyte level Cell voltage Cell condition, cleanliness, and age Float voltage/ current Battery room temperature Battery design versus actual load Battery/ system ground
Breaker trip	Battery / system short System overload

a. Use of maintenance personnel. Maintenance personnel should be able to recognize that a failure condition exists from observation of the display, alarm, diagnostics aids, and manufacturer's support. Simple failures such as blown fuses, defective fans, normal electrical-mechanical deficiencies, and electronic failures (i.e., printed circuit boards [PCB]) should not be beyond the repair or replacement capability of on-site maintenance personnel. Repair of the PCBs should be performed by the manufacturer.

b. Use of diagnostics. Display, alarm, and diagnostic equipment are generally provided in proportion to the cost and complexity of the UPS system. Whether personnel can repair equipment based on the diagnostics will depend on their training. All operating and maintenance personnel should be familiar with their display, alarm, and diagnostics aids to the extent that they

indicate proper operation, the need for local repair, the need for manufacturer-provided repair or consultation, and the requirement to observe and record trends indicating a need for preventive maintenance.

Table 4-4. Inverter/static switch corrective action

Inverters/ Static Switch	**Areas to Check**
No output voltage/ current	Input voltage/ breaker SCR or diode Static switch Constant voltage transformer Control boards
Low output voltage	Input voltage System overload System frequency Control board
High/Low output frequency	Input voltage Alternate source Frequency control setting Control board
No transfer from Inverter A to Inverter B	Primary/Alternate source Static switch Synchronizing circuit Control board

Table 4-5. UPS system corrective action

System	**Areas to Check**
No output voltage/ current	Incoming voltage Circuit breakers System components
No transfer to Diesel generator	Diesel generator equipment/ breaker Transfer switch
Low/high output voltage/ current	Incoming voltage System components Battery sizing/ capacity System sizing/ capacity
Transfers not bumpless	Battery connection Static switch Control board
Inadequate UPS capacity	UPS sizing/ capacity Battery sizing/ capacity

c. Suggested lists of test equipment and accessories. A list of test accessories for an UPS battery is given in table 4-8, and a list of UPS module or power converter test equipment for a 500 kVA module is given in table 4-9. Special equipment may be available or may be rented, dependent upon the site's maintenance capabilities. Normal and safety equipment should already be available as a part of the electrical maintenance equipment. Manufacturer's equipment should be provided with the UPS equipment by the UPS manufacturer.

Table 4-6. Motor/engine corrective action

Engine Problem	Areas to Check
Will not start	Starter, Battery, and connections; Fuel system, level, pump, injectors, internal engine (valves, tappets, pistons), Ignition system (gas engines) Control system interlocks/permissives
Poor Performance / Will not handle load	Fuel System and cleanliness, injectors or carburetor, internal engine, control and ignition system, System kW requirements

Table 4-7. Generator corrective action

Generator Problem	Areas to Check
No Output Voltage / Current	Check Stator and Rotor Continuity, Fluid diode pack, voltage regulator, Control System and interlocks
Generator Breakers will not close	Control Circuitry operation, Auto/manual sync system, generator control system
Generator will not pick up load or stalls/trips	Engine fuel and control system, generator voltage regulator, generator control system, auto/manual sync system, protective device settings
Generators don't share load	Paralleling control system
Main switchgear breaker won't re-close on diesel generator powered system	Generator sync system, breaker sync check relay, breaker control circuitry.

Table 4-8. Suggested test accessory list for battery maintenance

Item	Disposition
Battery capacity test set	Special
Battery conductance/impedance tester	Special
Battery lifter	Special
Metering of dc (located on the rectifier charger)	Normal
Hydrometer set	Normal
Microohmmeter	Normal
Portable infrared temperature measuring device	Normal
Terminal protective grease	Normal
Thermometer set	Normal
Torque wrench	Normal
Chemical-resistant gloves	Safety
Goggles and face shield	Safety
Protective aprons or suits and shoes	Safety
Rubber matting	Safety

Table 4-9. Suggested test equipment list for troubleshooting an UPS module

Item	**Disposition**
Analog multimeter	Normal
Digital multimeter	Normal
Dual trace oscilloscope	Normal
Load bank	Normal
Phase rotation meter	Normal
Portable ammeter	Normal
Portable clamp-on current transformer	Normal
Portable infrared temperature measuring device	Normal
Built-in test equipment board	Manufacturer
Diagnostic printed-circuit board (PCB) and all related parts	Manufacturer
Extender cable kit	Manufacturer
Capacitor shorting device	Safety
Rubber matting	Safety

CHAPTER 5

UNINTERRUPTIBLE POWER SUPPLY (UPS) SYSTEMS MAINTENANCE PROCEDURES

5-1. Maintenance for UPS systems

A general guide for the maintenance requirements of the UPS systems modules, static switches, and controls is provided. Although electronic components are not subject to wear in the same degree as electromagnetic (EM) components, they do require systematic maintenance. A standard maintenance procedure cannot be developed for all types and sizes of UPS units. The manufacturer's user's manual should always be consulted as to specific maintenance requirements and troubleshooting diagnostics guidelines.

a. Safety. Do not rely on memory. Follow the user's manual guidelines. Such guidelines should provide safety precautions. If your user's manual limits the maintenance that can be provided by the user, follow the manual's instructions unless general instructions are supplemented with additional guidance. Physical maintenance or troubleshooting should only be performed by personnel trained on the system. Operating personnel not instructed in UPS maintenance must limit their efforts to identifying the symptoms of a fault. Always be aware of the DANGER, as voltages within the UPS modules and associated switchgear are lethal. Lethal voltages are present even when the output circuit breaker in the UPS is open. It is necessary to open the circuit breaker in the distribution panel feeding the UPS and the UPS bypass circuit breaker, plus opening the direct current (dc) link connection to the battery, before all dangerous voltages within the UPS are eliminated. Capacitors may need to be discharged of their stored energy. Use CAUTION when operating UPS equipment to prevent serious injury or death.

b. Preventive maintenance. Periodic maintenance is required to maintain the integrity and lifetime of the battery. Power electronic equipment also requires scheduled maintenance even though solid-state devices are used. Preventive maintenance may require that the UPS system be shut down. A transfer of the critical load which may not provide the power enhancement capabilities of an UPS system is something that the user must tolerate in order to obtain maximum reliability and minimize downtime and repair costs.

(1) Records. Preventive maintenance is systematic maintenance. The objective is to minimize equipment operating problems and prevent failures by making minor or necessary repairs before major operating difficulties occur. The general condition of the equipment needs to be evaluated periodically, and records need to be maintained for comparison at subsequent inspections. Recorded information is more reliable than a maintenance technician's memory. Records should be concise but completely describe equipment conditions. Inspection records should provide complete information on the following topics, preferably on separate record sheets.

(a) Equipment record. This record should list the basic information on the equipment itself, e.g., manufacturer's identification, style, serial, size, location, etc., and incorporate inventory-control data for spare parts. Warranty requirements covering uninterruptible operating conditions should be abstracted from the user's manual.

(b) Repair cost record. This record should provide a history of repair and associated costs of maintenance for the UPS system. It is an essential diagnostic record for avoiding future difficulties, especially for systems determined to be of poor quality, misapplied, or marginal for the application.

(c) Inspection check list. This list should provide necessary and pertinent information on points to be checked and establish the recommended recurring dates when these checks should be made. Since shutdown may require a sliding window period, the amount of time for which this request must precede the shutdown window should also be stated.

(d) Periodic maintenance schedule. This schedule provides a complete listing of the day-to-day, weekly, monthly, and annual duties which should be reviewed on the same periodic time basis so that potential trouble situations can be investigated and corrected as soon as possible.

(e) Maintenance inspection and repair records. These necessary and vital documents should be completed in detail by the inspector or an assigned individual in the maintenance department. Maintenance personnel usually report their findings and corrective action on assignment sheets or job cards. Permanent records are a useful guide to each UPS system's general condition and reliability. It is important to know the frequency and type of repair and how often there is a need for a complete overhaul.

(2) Use of records. These records provide for a workable preventive maintenance program. The information obtained from the necessary periodic inspections can be quickly lost. This is particularly true when test results are required. Unless records and data on the test and performance of equipment are retained, the maintenance program will be defeated. Unless records are updated at each succeeding test period, valuable information is lost. Comparative test data materially assists an UPS specialist in defining problems, especially when test results differ from manufacturers' recommended settings or actual factory test data. Significant changes in comparative test data can, in general, be related to the equipment's condition.

(3) Scheduling. Scheduling of UPS and battery maintenance is normally based on the manufacturers' recommendations. Since an UPS system is vital to the operation of critical loads, it may be considered advisable to provide more inspections than those the manufacturer recommends. Certain items on the UPS should be inspected daily or weekly. This inspection can be done by operating personnel, but data should be recorded and sent to the appropriate maintenance point not more than 5 days after being recorded. Battery maintenance should be done by maintenance personnel. Visual monitoring data should be recorded daily for the UPS, and if recorded for the battery, the recorded data should be handled and sent on to the maintenance department on a weekly basis.

(4) Periodic system status checks. The continued monitoring of the operating status of any electronic equipment greatly enhances the probability that failure of that equipment will be prevented. Daily observation is advised but do not provide less than weekly checks. Personnel involved in status monitoring should be those most concerned with the equipment's proper functioning.

(a) UPS systems in computer rooms. Computer room operating personnel should become familiar with the equipment and its various operating indications. They should maintain records on all findings or occurrences during preventive maintenance. The operating personnel shall check all lamps on mimic bus and alarm status indicators. They shall have maintenance

personnel replace inoperative bulbs. Also, they shall check input, output, and bypass voltages and currents and all other system status readings and compare them to the required specifications. A copy of the requirements which must be met, exceeded, or not exceeded should be included as a part of the inspection checklist. Maintenance personnel shall be called to apply troubleshooting procedures if abnormal values are indicated. Operating personnel may also ensure adequate ventilation and cooling by checking that all fans are operational; ensure all doors, drawers, and covers are secured; and check for unusual noises and odors.

(b) UPS system in dedicated UPS rooms. These systems will normally have remote displays and alarms. Display panels usually indicate problems only to the extent that they affect computer operations. Summary alarms keep the information simple and easy to understand. A usual system would include "on battery," "battery near discharge," "overload," and "UPS operating abnormality." In a location where the UPS is in a dedicated room, the periodic monitoring records of the UPS system would be provided by maintenance personnel. Computer room operating personnel would only record battery cycling, time, discharge, overload, and abnormality and advise maintenance personnel at the time of an alarm indication of the problem displayed.

(5) Major system inspections. These should be performed at least annually on small to medium systems and semiannually on large to very large systems. By performing this type of maintenance on a scheduled basis, it is possible to find and remedy potential problems before the system's operation is affected. Table 5-1 provides general guidance for the major system inspection, however, the manufacturer's recommendations should be strictly followed.

(6) Minor system inspections. Minor system inspections should be provided either after 5 months from an annual major inspection or after 3 months from a semiannual major inspection unless a more frequent requirement is recommended by the manufacturer. Minor system inspections should include at least the first four items listed under major inspections. Off-line load testing is required if major component replacements are required.

Table 5-1. Major system inspection general

Perform visual checks and operational tests of all UPS equipment and associated switchgear.
Review maintenance logs and log all alarm operations and output
Complete a functional checkout and test of the UPS diagnostic systems.
Check environment, temperature, dust, moisture, room vents, etc.
Clean and tighten all power connections at the input and output terminals, at all circuit breakers, and at the terminal posts and fuses on the rectifier and inverter legs. During the inspection, check all power cabling for abrasions and burn spots. Visually check components for signs of overheating, swelling, leaking, etc.. Visually check printed circuit board alignments.
Replace air filters at regular intervals. Site conditions will determine how often the filters should be replaced, but generally, they will need to be replaced at least every 6 months in clean environments. If more frequent replacement is required, the cleanliness of the environment should be upgraded.
Check and calibrate each system, to include switchgear and circuit breakers, meters, and alarm levels for frequency, voltage, current, transfer, trip, alarm, etc.
Perform system and component functional tests on all UPS equipment to insure proper functioning within specified parameters.
Run all UPS system diagnostics, and correct all diagnosed problems.
Resolve any previous outstanding problems, review operation with user personnel, and report any power enhancement or equipment operation recommended changes.
Replace control batteries at least every 2 years. If the control batteries have been used without inverter or bypass AC power, they may need replacement sooner.

Table 5-1. Major system inspection general (Continued).

Open all doors, drawers, and covers. Perform a thorough inspection of all cabinets for foreign objects. Perform a thorough dusting and vacuuming of all cabinet interiors. Use only rubber or plastic vacuum attachments to clean drawers and cabinets. Except for vacuuming, never attempt to clean the UPS subassemblies. Accumulated dust or grime should only be cleaned by the manufacturer's service representative. The exterior panels can be cleaned with a mild cleaning solution. Transparent panels should be cleaned with a mild soap and water solution only. Restore all doors and covers to their secured condition.
Off-line load test the UPS system to ensure that the system is completely functional.
Return the UPS to service following the manufacturer's recommended start-up procedures. Make sure that no damage to the UPS equipment or shutdown will occur because of inrush currents.

c. Corrective maintenance. All UPSs have some degree of diagnostic capability which usually includes some degree of battery monitoring. This diagnostic ability, along with a systematic tracking of preventive maintenance data, will aid in locating possible internal faults and may even help in tracking external faults. A good preventive maintenance program should minimize the need for corrective maintenance.

d. Recognizing impending problems. Operating personnel as well as maintenance personnel should be made aware of the conditions which lead to problems and the clues which may point to the beginning of troubles. Any time the environmental requirements are compromised there will be a potential for damage. Maintenance personnel should be called to check equipment that has not been kept clean, dry, tight, and friction free.

e. Troubleshooting. Troubleshooting procedures covered by the user's manual address the most common alarm conditions and assume that spare parts are available for replacement of defective components. If following the procedure does not lead to the correction of an alarm condition, contact the manufacturer's local service representative or field service office. Each manufacturer has a particular system to guide the troubleshooter in the definition of a fault or the action necessary to remove a fault condition. Fault-free recognition systems or fault charts all list "yes" or "no" steps leading to some recommended action. Troubleshooting procedures may be provided for problems such as overvoltage trip, undervoltage trip, battery discharge, battery ground, battery undervoltage, clock failed, frequency failed, fuse cleared, inverter leg fuse blown, inverter overload, inverter/rectifier overtemperature, logic failed, power supply failed, or rectifier fuse blown. This guide is reproduced to illustrate the type and depth of information that must be on hand prior to any attempt at troubleshooting by qualified personnel. Obtain the manufacturer's troubleshooting guide that applies to the specific system needing repair.

f. Spare parts availability. A spare parts inventory for the UPS equipment should have been provided at the time of installation. Normally, the inventory level should satisfy maintenance requirements for at least a one-year period based on the level of servicing capability of maintenance personnel.

(1) Spare parts levels. The basic level includes typical user-replacement items such as fuses, capacitors, power semiconductors, and other items that may be useful at the time of installation. Another level may include the basic level plus essential electronic control modules and printed circuit boards. Additional items which are less frequently replaced or not as essential to the uninterrupted operation of the UPS may also be included. The baking soda or boric acid neutralizing agents and distilled water required for the battery electrolyte should also be available. Spare batteries having a short shelf life (6 months) should be ordered on need.

(2) Training levels. There are two training levels: basic, that is preventive and troubleshooting, and advanced, that is corrective or remedial. Every user's manual will be

structured differently. An understanding of what user personnel are permitted to do and what requires a service representative will be different. Always refer to the user's manual for specific directions.

(a) Qualifications. Maintenance electricians should be specifically qualified for their assignments. Responsible supervisors should know the capabilities and limitations of their personnel and the equipment to be maintained and should not attempt maintenance or repair activities for which they are not completely staffed or adequately equipped. It is important that personnel who are to be responsible for the operation and maintenance of the complex UPS system equipment be trained to a level at which they are comfortable with the equipment. Without this training there is a tendency for personnel to become very apprehensive about operating controls or opening cabinet doors if necessary.

(b) Basic training. Personnel should be able to perform preventive maintenance checks and first-level troubleshooting, order spare parts, and have a knowledge of the UPS system operation, after having completed the UPS manufacturer's basic training course. Training topics include start-up procedures, theory of operation (block diagram level), system description, demonstration of the UPS in operation, operational characteristics, calibration and alignment procedures, preventive maintenance, basic troubleshooting procedures, safety, and battery maintenance.

(c) Advanced training. This training may not be available from all manufacturers. Personnel should be able to perform their own remedial maintenance and be fully equipped with spare parts and testing and repair equipment to do it independently, except for occasional telephone consultations with the manufacturer's service group. They should have a complete knowledge of the UPS system's operation, be able to order and install replacement components, and have completed the UPS manufacturer's advanced training course. Topics will expand on those of the basic course and include corrective maintenance, testing and repair equipment, schematics analysis, flowcharts, troubleshooting charts, and printed-circuit assembly repair.

5-2. UPS battery maintenance

The basic component that differentiates an UPS system from a power conditioner is the battery. If the batteries fail before the backup generators come on line, the critical power goes down. Improperly installed, poorly maintained, and inadequately tested batteries are common happenings. Only the fact that the backup generators are highly reliable and come on line in a few seconds prevents many UPS battery banks from failing long before their rated design life. Maintenance costs and maintenance access generally are the greatest contributing factors to poorly maintained battery systems.

a. Maintenance costs. An UPS equipment installation cost will run $750 to $2500 per kVA. Annual maintenance cost will run 3 to 8 percent of the installed cost for a static UPS and 1 to 2 percent of the installed cost for a rotary UPS. An UPS battery-per-cell installed cost is about $10 with an annual maintenance cost of 120 to 180 percent of the installed battery-per-cell cost. These battery maintenance costs may appear high; but, compared to the cost of an unplanned critical load outage, they are relatively small.

b. Maintenance access. Redundant UPS systems having a separate but inter-tied battery per UPS module can be maintained without taking the entire UPS system off line. A single system battery requires an UPS system shutdown on not less than a quarterly basis. Shutdown should be done in conjunction with the maintenance shutdown for the UPS equipment. While some battery

maintenance service companies indicate that battery maintenance which does not require testing can be performed without UPS shutdown, they also indicate that the battery disconnect switch should be open. It is recommended that site maintenance personnel not provide quarterly maintenance to the battery without an UPS shutdown.

c. Preventive maintenance. Institute of Electrical and Electronics Engineers (IEEE) 450 and IEEE 1106 recommend monthly, quarterly, and yearly inspections. Some manufacturers recommend weekly inspections. The National Electrical Code (NEC) requires periodic testing on a schedule acceptable to the authority having jurisdiction. Periodic maintenance is required and written records of tests and maintenance must be kept. A typical lead-acid battery inspection procedure shown in table 5-2.

(1) Testing. Do not overtest. Frequent testing will shorten the service life. IEEE 450 and IEEE 1106 require a performance test (a current capacity test which discharges a battery to a designated terminal voltage to detect any change in the capacity determined by the initial test) within the first 2 years of service and then recommends performance tests at 5-year intervals until the battery shows signs of degradation or has reached 85 percent of the service life expected. Degradation of lead-acid batteries is indicated when the battery capacity drops more than 10 percent of rated capacity from its capacity on a previous performance test or is below 90 percent of the manufacturer's rating. Degradation of nickel-cadmium (ni-cad) batteries or extensive capacity loss is indicated when the battery capacity drops more than an average of 1.5 percent per year of rated capacity from its previous performance test capacity. Then annual performance tests must be provided. Perform tests in accordance with IEEE 450 or IEEE 1106 requirements.

(2) Inspections. Inspections should be made under normal conditions and performed on a regularly scheduled basis. Tables 5-2 through 5-5 provide general checklists to be performed on a weekly, monthly, quarterly, and annual basis. Refer to the appendices of IEEE 450 and IEEE 1106 for more information. The inspections recommended in this manual are in excess of IEEE requirements.

Table 5-2. Weekly battery inspection

Check and record the overall float voltage at the battery terminals (not at the rectifier charger)
Measure the pilot cell voltage
Make a visual cell and rack check as to general appearance, cleanliness, cracks in cells, electrolyte leakage, or evidence of corrosion.

Table 5-3. Monthly battery inspection

Check and record the overall float voltage at the battery terminals (not at the rectifier charger)
Measure the pilot cell voltage
Make a visual cell and rack check as to general appearance, cleanliness, cracks in cells, electrolyte leakage, or evidence of corrosion.
Check rectifier
Check rectifier charger output current and voltage
Check electrolyte levels
Check ambient temperature and condition of ventilating equipment
Check pilot cell voltage, specific gravity of flooded lead-acid pilot cells, electrolyte temperature of flooded pilot cells r and terminal temperatures of valve-regulated pilot cells
Check for evidence of voltage leaks to ground

Table 5-4. Quarterly battery inspection

Check and record the overall float voltage at the battery terminals (not at the rectifier charger)
Measure the pilot cell voltage
Make a visual cell and rack check as to general appearance, cleanliness, cracks in cell, electrolyte leakage, or evidence of corrosion.
Check rectifier
Check rectifier charger output current and voltage
Check electrolyte levels
Check ambient temperature and condition of ventilating equipment
Check pilot cell voltage, specific gravity of flooded lead-acid pilot cells, electrolyte temperature of flooded pilot cells r and terminal temperatures of valve-regulated pilot cells
Check for evidence of voltage leaks to ground
Check rectifier charger output current and voltage
Check electrolyte levels
Check ambient temperature and condition of ventilating equipment
Check pilot cell voltage, specific gravity of flooded lead-acid pilot cells, electrolyte temperature of flooded pilot cells r and terminal temperatures of valve-regulated pilot cells
Check for evidence of voltage leaks to ground
Check all cell voltages, specific gravities of all flooded lead-acid cells and all terminal temperatures of valve-regulated batteries
Check total battery voltage
Check 10 percent of inter-cell connection resistances chosen at random
Clean and provide corrosion protection of cells terminals, and racks, and add water to adjust electrolyte levels as necessary
Provide an equalizing charge if cells are unbalanced
Analyze records and report any recommendations

(3) Special inspections. A special inspection should be made whenever a battery experiences an abnormal condition (such as a severe discharge or overcharge) to assure that the battery has not been damaged. This inspection should include all the quarterly tests.

d. Maintenance procedures. Always follow the battery manufacturer's procedures and check warranty requirements. Manufacturers will normally provide assistance in developing a maintenance program for their batteries. All have maintenance instructions for their cells and some will conduct maintenance seminars or presentations. Be familiar with IEEE 450 and IEEE 1106 covering maintenance, testing, and replacement of storage batteries for lead-acid and ni-cad types, respectively. Battery record, figure F-11 in National Fire Protection Association (NFPA) 70B is an example form to use.

(1) Maintenance program. The maintenance program selected should address the specific needs of the battery installed and should be both consistent and regular. Recommended maintenance intervals should never be longer than those required by the manufacturer to satisfy the requirements of their warranty. In addition, critical load requirements may dictate more frequent maintenance based upon the importance of the installation and the consequences of a failure of the battery when it is required to serve its load. Proper maintenance will ensure optimum battery life assuming the battery has been properly sized and installed. Wherever practicable, tests should be carried out in a manner that accomplishes one or more objectives at once; a capacity test also can check for high connection resistance.

(2) Battery specifics. A maintenance program must address the specific battery installed. Although the tests and frequency of maintenance may be the same, there are subtle differences between batteries. For example, the nominal float voltage will vary between lead-antimony and lead-calcium cells. In addition, the total float voltage (terminal voltage) will be different for a

188-cell UPS battery than for a 192-cell UPS battery, since the number of cells varies even though the voltage per cell may be the same. Another consideration is that the float voltage used will vary with the nominal specific gravity of the cell.

Table 5-5. Annual battery inspection

Check and record the overall float voltage at the battery terminals (not at the rectifier charger)
Measure the pilot cell voltage
Make a visual cell and rack check as to general appearance, cleanliness, cracks in cells, electrolyte leakage, or evidence of corrosion.
Check rectifier
Check rectifier charger output current and voltage
Check electrolyte levels
Check ambient temperature and condition of ventilating equipment
Check pilot cell voltage, specific gravity of flooded lead-acid pilot cells, electrolyte temperature of flooded pilot cells r and terminal temperatures of valve-regulated pilot cells
Check all cell voltages, specific gravities of all flooded lead-acid cells and all terminal temperatures of valve-regulated batteries.
Check total battery voltage.
Check 10 percent of inter-cell connection resistances chosen at random.
Clean and provide corrosion protection of cells terminals, and racks, and add water to adjust electrolyte levels as necessary.
Provide an equalizing charge if cells are unbalanced.
Analyze records and report any recommendations.
Provide a detailed visual inspection of each cell
Check all bolt connections per IEEE 450 or IEEE 1106 to see if retorquing is required and retorque to the manufacturer's specifications as required.
Check inter-cell, inter-tier, and battery terminal connection resistances.
Check integrity of the battery racks.
Record the AC ripple voltage going to the battery and ensure that the rectifier-charger filtering circuits are maintaining a ripple output that meets the battery manufacturers' requirements on both a continuous and intermittent (spikes, transients) basis.

(a) Battery system replacement. When a battery is replaced, the new battery often continues to be maintained in the same manner as the old ones. However, the new battery may be of a different alloy or nominal specific gravity or may contain a different number of cells. Maintenance personnel may not recognize the differences, which can lead to irreversible damage.

(b) Battery condition. Battery condition can be assessed based upon comparisons of current data with past data. Data collected during maintenance must always be corrected to the standard temperature reference so that meaningful comparisons between data can be made.

(3) Remote battery monitoring systems. Battery monitoring may be performed remotely with the installation of a battery monitoring system. These systems are able to monitor overall string voltage, cell voltages, ambient temperature, internal cell resistance, inter-cell resistance, and load cycles. With the installation of one of these systems, system reliability will increase due to the constant monitoring of the system. Also, maintenance cost will be reduced, by minimizing the required maintenance man-hours.

e. Maintaining flooded lead-acid cells. Visual checks, various measurements, and certain tests are used to optimize the life and performance of battery systems. Visual checks will indicate when cleaning is necessary or when there are other problems that need to be corrected. Measurements of voltage and specific gravity identify the condition of each cell. Battery capacity tests and measurements are made of inter-cell connection and terminal connection resistances are made to determine the battery system's condition. Measurements and tests are often performed on pilot cells instead of the entire battery.

f. Maintenance considerations. Specifics of maintenance requirements will vary because of the battery type, the construction, and the manufacturer's requirements. However, general

maintenance considerations are the same, except that electrolyte levels and specific gravity requirements do not apply to valve-regulated batteries and specific gravity variations do not affect the performance of ni-cad cells. Maintenance of a battery begins at the time of the battery installation. The tests and data taken at that time form the base set of values for the battery to which all future data must be referenced for later inspections.

(1) Visual inspections. Visual inspections afford the opportunity to check cells for damage or evidence of improper charging or other mishandling. A flashlight or other localized unsparking light source is essential in inspecting cell components and connections and checking for evidence of excessive gassing, mossing, sediment, and low electrolyte levels. Vibration may be a problem. Although hydration and frozen electrolytes should not be problems, under abnormal operating conditions such unlikely events can cause irreparable damage.

(a) Cell inspections. The jars, plates, and connections should be closely inspected on each cell. Jars, covers, and cover-to-jar and cover-to-post seals should be checked for cracks or other structural damage. Failure of any seal will cause the electrolyte to seep out. A light source can be directed through clear jars as an aid in locating cracks or structural damage to the jar or cover and their seals; such defects should be noted, and the manufacturer should be consulted as to remedial action. Unwrapped plates in a clear jar should be examined, as they show the battery's condition. The color of the positive plate of a lead-acid cell will vary from light to deep chocolate brown, and the darker the color the more likely the battery has been overcharged. The negative plate will be gray in color, with a tendency to darken with age. Check and note any buckling, warping, scaling, swelling, or cracking of plates. Shining a light source on the plates may detect sulphation by reflections from any sulphate crystals on the plate edges. If visible, inspect the connections between the plates, straps (i.e., bus bar connecting the plates to the post), and posts for obvious abnormalities. In areas of high seismic activity, this connection sometimes fails if acceptance seismic testing was not properly performed. Check for electrolyte spillage, evidence of corrosion, and vent cap damage, and correct any problems. Examine cables connecting the battery to the rectifier charger and those cables used as inter-cell or inter-tier connectors to be sure they are putting no strain on the cell posts.

(b) Excessive gassing. Although gassing on recharge is normal, excessive gassing can indicate overcharging, so gassing should always be noted. Lead-acid batteries begin to gas when cell voltage reaches approximately 2.30 volts. Outgassing, when a cell is on open circuit or on float charge, may be an indication of high local action and undercharging. The gas coming from the negative plate is not generated but is squeezed out of the expanding active plate material by the sulphate formed as the cell discharges. Most local action takes place at the negative plates, and the positive plates may remain well charged. The specific-gravity drop will not be as great as for uniformly discharged positive and negative plates, and so using specific-gravity readings may not detect this action. Cells which do not gas during charge may indicate problems such as undercharge, short circuits in the cell, or impurities in the electrolyte.

(c) Mossing. Mossing of lead-acid cells is caused by overcharging or charging at excessively high rates. Moss shield protection may be provided by the manufacturer on the top of the plates for some cell constructions. Mossing results from the accumulation of a sponge-like material on top of the negative plates or straps. The material is shed predominantly from the positive plates and is carried off by gassing, where, if deposited on the positive plates, gassing simply washes it off again; however, if the material is deposited on the negative plates it will adhere to these plates. Over time, the negative plates build up a deposit sufficient to bridge and make contact with positive plates, causing partial shorts. If mossing is found during an inspection, expect to find excessive sediment as well.

(d) Sediment. Observing quantity and color of sediment in clear lead-acid battery jars also indicate the battery's condition. Excessive sediment usually indicates overcharge or charge at excessively high rates. The sediment from a well maintained cell may look like a layer of dust on the bottom of the jar. The sediment from a poorly maintained cell may completely fill the space provided under the plates and will be in the form of hills under the plates. Partial short circuits will occur when the sediment hills reach the plate bottoms. Dark or chocolate brown sediment hills beneath the positive plates indicate continuous overcharge. A gray deposit in hills beneath the negative plates indicates continuous undercharge. Excessive but somewhat mixed sediment hills showing both positive and negative materials indicate the battery has probably undergone random periods of undercharge and overcharge. Examine cells for mossing where excessive sediment is noted. Cells should be watered when inspection reveals electrolyte levels below the high level line. The manufacturer should be consulted immediately about cells where the electrolyte level is below the plate tops. Water should not be added to these cells until the manufacturer has agreed that this is the proper action or has inspected the cells and recommended filling. Electrolyte levels below the plate tops can cause permanent cell damage, and the cell may need to be replaced. A record of the amount of water added to each cell should be kept and checked with the battery manufacturer's normal cell water consumption requirement. Lead-antimony batteries normally experience an increase in water consumption with age. Water consumption in excess of the manufacturer's requirement is an indication of overcharging. A cell that has been recently moved or transported should not have water added until it has been placed back on charge for a period of time as recommended by the manufacturer. If the plates were exposed while moving cells, consult the manufacturer for recommended action. Vibration occurring as a cell is moved will tend to free hydrogen bubbles attached to the plates and the loss of these bubbles will cause a decrease in the electrolyte level. Once the cell is installed, the bubbles will reappear, and the electrolyte level will increase. Never add acid (or alkali) to a cell, nor add any additive which claims to rejuvenate cells.

(e) Vibration. Check the surface of the electrolyte for indication of any battery vibration. Battery life will be reduced in proportion to the length of time and action of any severe systematic vibration. Excess sediment when there is no apparent reason for that sediment (such as the battery has not experienced overcharging or undercharging) can indicate recurrent vibration. Where signs indicate vibration, reexamine the battery supporting/restraining system and eliminate this source of damaging activity.

(f) Hydration. Overdischarge of a lead-acid battery without immediate recharge can cause hydration. This could happen if the rectifier charger is shut down or if a lead-acid battery is kept in storage for an extended period without recharging. The cell must be replaced if irreversible damage is indicated, for example, by a whitish "bathtub ring" visible approximately halfway up a clear jar. The lead and lead compounds in the cell dissolve in the water released on overdischarge and form lead hydrate which is deposited on the separators. Thousands of short circuits between the positive and negative plates will occur when the battery is recharged after hydration. Hydration can also occur when a dry-charged battery is mistakenly filled with water instead of the electrolyte solution.

(g) Frozen electrolyte. In the required environment, it is very unlikely that the electrolyte will freeze since nominal 1.200 specific-gravity lead-acid electrolyte only starts forming slush at approximately -20°F. But, during discharge, a lead-acid cell's specific gravity decreases, and there is a resultant increase in the temperature at which slush could form; freezing would then begin at 16°F if the specific gravity decreased to 1.100. Irreparable damage occurs when ice crystals form within the battery, even though damage may not be visible. In essence,

the frozen electrolyte will cause the active materials to expand and lose contact with the grid. The frozen electrolyte can also cause structural damage to the jar.

(2) Cleaning. It is recommended that batteries be kept clean at all times. The battery cells, battery connections, and battery vent caps shall be kept clean and free of corrosion to maximize the battery lifetime.

(a) Battery cells. Jars or covers should be wiped with a clean lint-free cloth or wiper moistened with clean water. The cloth should be moistened to clean any electrolyte spilled on the cover or jar with a suitable neutralizing agent. Wipe with a clean dry cloth or wiper once cleaning is finished. Never use solvents, detergents, oils, waxes, polishes, or ammonia to clean the jars, as this may cause permanent damage to the jar. Use an acid-neutralizing agent consisting of soda solution (one pound of bicarbonate of soda to one gallon of water). Other neutralizing agents may damage the jar.

(b) Battery connections. Terminal posts and connections should be cleaned with a clean lint-free cloth or wiper moistened with a suitable neutralizing agent, followed by a clean cloth moistened with water, and finally by a dry cloth. Cleaning charged batteries could present a safety hazard in the case of heavy corrosion. Corroded connections should be unbolted and cleaned. Suitable means to continue service (e.g., installing jumper cells) should be arranged for batteries which must remain in service. Normally, loss of the voltage jumpered out by removal of the cells will not degrade the ability of the battery to supply the UPS if the number jumpered out is in accordance with the UPS manufacturer's recommendations. Cleaning of heavily corroded posts and connectors should follow the manufacturer's directions. Do not clean the surfaces so rigorously that the plating is removed. A plastic bristle brush can be used. Once the connection is clean, a thin coating of an approved corrosion inhibitor such as No-Ox-Id should be applied. Never use anti-corrosion sprays in aerosol containers. Observe the manufacturer's recommended torque values when remaking the connection.

(c) Battery vent caps. Flame arrestor vent caps should be cleaned periodically by thoroughly rinsing in clean, clear water. No solvents or detergents should be used.

(3) Pilot cells for voltage and specific gravity measurements. One or more pilot cells may be chosen to reduce the time necessary to perform inspections and tests while still affording the user some degree of confidence in the battery's condition. One cell per rack section should be chosen so that all levels are represented; otherwise, the selection is arbitrary. Some users select pilot cells after complete sets of quarterly voltages and specific gravities are taken. Criteria for selection include cells with the lowest specific gravity, lowest voltage, highest specific gravity, highest voltage, or combinations of both. Pilot cells should be rotated periodically, usually on a quarterly basis. One reason for this is to limit electrolyte loss. Whenever a cell's specific gravity is read, some small amount of electrolyte will remain in the hydrometer after the electrolyte which was removed from the cell for the specific-gravity reading is again returned to the cell. For the more frequently read pilot cell, this loss of electrolyte, although very small, could ultimately affect the cell over a long period of time, which is the reason for pilot cell rotation.

(4) Temperature readings. Electrolyte temperatures should be read and be recorded any time specific-gravity or voltage readings are taken. Normally, only a representative sample of cells is checked for electrolyte temperature. IEEE 450 recommends checking every sixth cell, even when each cell's voltage and specific gravity are read. These readings are used to correct specific gravity, along with the electrolyte level correction, and voltage to a standard reference temperature in accordance with instructions in IEEE 450. The standard reference temperature

and correction for batteries not manufactured in the United States should follow the manufacturer's recommendations. Operation of a battery on a higher or lower reference electrolyte temperature will affect that battery's performance and life.

(a) Differential temperature. Differential temperatures between cells can be a problem, if the electrolyte temperature differential between any two cells is greater than 5°F. This problem normally occurs when one portion of a battery is located near a localized heat source such as a window that allows the sun to shine on a portion of the battery, or when a battery rack with more than two steps or tiers is used. A battery temperature differential will cause some cells to be overcharged and some cells to be undercharged.

(b) Ambient temperature. Ambient temperature of the battery area should be read and recorded periodically even where the room or area is environmentally conditioned. Battery performance is based upon the cell electrolyte temperature, which can differ from the room ambient. Optimum battery performance is obtained when electrolyte temperature is maintained at 77°F.

(5) Specific-gravity readings. Specific gravity is a good indication of state-of-charge of lead-acid cells. Corrections for electrolyte temperature and level must be applied to adjust the specific-gravity readings to a standard reference temperature. Level corrections can vary for each cell type and should be obtained from the manufacturer. Note that specific-gravity readings should not be taken within 72 hours of the termination of an equalizing charge or a water addition. Specific-gravity readings can be inaccurate where the water addition has not been properly mixed with the existing electrolyte solution and stratification occurs.

(a) Differences in specific gravity. Lead-antimony or lead-calcium batteries do not always have the same nominal specific gravities even if the plate alloy is the same. Maintenance personnel should be alerted when a battery replacement provides a different specific-gravity requirement. New high performance stationary cells for UPS service may have nominal specific gravities as high as 1.300. In similar cells, higher specific gravities mean higher float voltage requirements, increased local action, and higher water consumption. Some application considerations may also cause a manufacturer to vary the nominal 1.215 specific gravity for stationary cells. High or low ambient temperatures are not usually found for UPS systems, but the user should be aware of their effects on specific-gravity requirements. A higher specific gravity electrolyte is provided when ambient temperatures are extremely low. This increases cell performance as well as serving to lower the freezing point of the electrolyte. Similarly, in high ambients (normally above 90°F), a lower specific gravity electrolyte is provided to reduce losses and maintain expected life.

(b) Comparisons. The measured specific gravity should be corrected to the reference temperature and compared to previous data. Readings should be uniform, with a minimum difference between the high and low readings. Where specific gravities vary considerably over the battery, they are termed "ragged" and corrective action is required as covered in IEEE 450 and IEEE 1106.

(6) Voltage readings. The open-circuit voltage of a lead-acid cell is a direct function of specific gravity and can be approximated by equation 6.1. This relationship holds for cells that are truly open-circuited (i.e., no current flowing through the cell) and have been off charge for more than 16 hours with a well-mixed electrolyte. A problem may be indicated if a voltage check indicates a voltage below that expected by the following equation.

Open-circuit voltage = specific gravity + 0.84

(a) Float and equalize voltages. Float voltages are directly related to cell type and plate alloy as well as to the specific gravity of the cell, so that the higher the specific gravity, the higher the minimum float voltage must be. This ensures sufficient charging current is available to overcome the increased local action. Too high a float voltage will result in overcharging and therefore reduce battery life. A slightly higher float voltage is sometimes selected to reduce or even eliminate the need for periodic equalizing charges for maintenance purposes. Equalizing voltages are normally limited by system design considerations when batteries are selected and sized.

(b) Voltage records. Correction should be made for the electrolyte temperature and no voltage readings should be taken within 72 hours of an equalizing charge. Voltages should also be uniform rather than ragged, with minimum spread between the high and low readings. Measure the terminal voltage of a battery, at the battery terminals. Measurements at the rectifier charger are not acceptable, since the voltage drop in the cables to the battery may result in low voltage at the battery terminals, with resultant undercharging of the battery.

(7) Capacity tests. The only true indication of battery condition and capacity is a discharge test. Stationary cells designed for float operation should have no more than two deep discharges per year, and the duration of these tests, test setup, personnel requirements, etc., make frequent testing impractical. One must also consider that the battery is not available to serve its load during a capacity test, and so an UPS shutdown must occur or a redundant/replacement battery will need to be provided. For these reasons, voltage and specific gravity are used to periodically monitor the battery condition. Recognize that these readings indicate state-of-charge, but do not indicate the capacity of the battery.

(a) Use of capacity tests. The results of a capacity test can be used to determine the need for a replacement battery. Currently, battery test sets are available from a number of manufacturers, or the user can fabricate a load bank (sometimes actual loads can be used). Three types of battery capacity tests are described in the standards, namely, acceptance, performance, and service tests. Of these, the last two are required for normal maintenance testing.

(b) Comparison of results. The key again is to compare the results to prior test data to establish a trend. Battery capacity may be less than 100 percent of nameplate rating during the first few years of operation, unless 100 percent capacity at delivery was required by the purchase specification. The capacity (normally 90 to 95 percent of nameplate) of a new battery will rise to its rated value after several charge-discharge cycles or after several years of float operation.

(8) Connection resistance. This check is very important but is often neglected, even though it can be conducted with the battery in service. The instruments normally used are those which are used to measure a power circuit breaker's contact resistance by passing a moderate to high current through the connection under test and measuring the voltage drop which is converted at the meter output to microohms. These measurements are difficult to perform, especially when the cells have multiple posts per cell and multiple inter-cell connectors per post. In these cases, multiple measurements per cell must be made or there will be significant errors in the measurement. The test, performed at the initial installation, should be repeated periodically and the results compared. High connection resistance, if not detected, can cause severe damage in a stationary cell required to discharge at a high current rate for a period of time, as in an UPS application. High connection resistance can actually melt battery posts.

(9) Battery rack. Battery racks should be checked during visual inspections. Included are checks for structural integrity, corrosion, and proper grounding.

(a) Corrosion. The check should include an inspection of the corrosion resistant covers (e.g., plastic channels) normally installed on the rack materials where the jars rest. Clean any corrosion found and recoat the rack using a chemical-resistant coating, in accordance with the manufacturer's instructions. Replace cracked or broken corrosion-resistant covers.

(b) Seismic. Additional checks of the rails and spacers must be made, if the battery rack is a seismic type that is designed for use in installations requiring earthquake protection. Seismic racks use rails and spacers to prevent movement of cells during an earthquake and the spacers function to prevent adjacent cells from knocking together. The side rails are covered by a corrosion-resistant cover (such as a plastic channel) where they touch the jars. Check to ensure all side rails, end rails, and spacers are in place, and bolts are properly torqued. Occasionally, portions of the seismic equipment for the rack may be disassembled to allow maintenance to be performed on the battery or for cell replacement. The ability of the rack to protect the battery during an earthquake will be impaired if rack reassembly is not properly done. Consult the manufacturer if replacement spacers are required. Spacers must be corrosion resistant and non-swelling, such as using a styrofoam-like material. Swelling of spacers can damage the battery jars. Recheck and retorque all rack bolts and anchoring bolts, steel plates, and welds. Note any deficiencies and correct in accordance with the manufacturer's recommendations/drawings.

(10) Water quality. Use of distilled or deionized water is recommended so as to eliminate the addition of foreign contaminants which reduce cell life and performance. Otherwise, a water quality test is necessary. This can be performed by the user or by the battery manufacturer who will provide information on the maximum allowable impurities in the water to be used for maintaining electrolyte levels. Water should be stored in chemically inert, nonmetallic containers.

(11) Test equipment. Test equipment used in battery maintenance is covered in paragraph 4-5. Periodically, recalibrate all devices as necessary. A number of new instruments are available which can continuously monitor a battery. These are often provided for systems serving very critical loads. One final caution is that instruments which are inserted into the electrolyte should not be used for different battery types. For example, a hydrometer used on a lead-antimony battery should never be used on a lead-calcium or a ni-cad battery. Such use of equipment will cause cell contamination.

g. Maintaining valve-regulated lead-acid cells. All the requirements given for flooded lead-acid cells apply except the requirements for electrolyte level and specific gravity.

(1) Differences. The valve-regulated sealed lead-acid cells differ from traditional cells in that they are not in transparent jars; thus, plates cannot be seen, and the cell's electrolyte is not accessible. Do not expect to install these cells and forget about them for their expected life. Maintenance inspections are still required. Gelled electrolyte cells are normally operated in a vertical orientation; however, some manufacturers can produce a cell which can be operated horizontally. A seal leak may require cell replacement.

(2) Charging. Charging considerations for valve-regulated sealed lead-acid cells are similar to those for flooded cells, but charging voltage must be monitored more closely. Normally, the cells operate on float charge without need for periodic equalizing charges. Recharge times are relatively short when recharges are required. Temperature compensation of

float voltage is more critical than for flooded cells, and a temperature-compensated rectifier charger should be utilized.

(3) Temperature. Failure to temperature-compensate float voltage can cause premature cell failure. A recommended float voltage of 2.25 volts per cell at 77°F must be increased to 2.33 volts per cell if the ambient temperature is 55°F and must be decreased to 2.18 volts per cell if the ambient temperature is 95°F (consult manufacturers for specific values for their cells). Ripple content of the rectifier charger output must also be considered. Ripple voltage limits are specified by some battery manufacturers on their cell data sheets. Excess ripple may reduce the expected life of the battery, particularly when the battery has a low internal resistance.

h. Ni-cad cells. In general, all of the procedures and tests described for flooded lead-acid cells are valid for ni-cad batteries, except for specific gravity. The ni-cad electrolyte is a solution of potassium hydroxide in water with a specific gravity between 1.180 and 1.200, depending upon the manufacturer. The electrolyte does not enter into the reaction of the ni-cad cell and is therefore not an indication of state-of-charge; thus, specific-gravity readings are not part of normal routine maintenance. The electrolyte in a ni-cad cell will start to freeze (slush) at approximately -40°F. Occasionally, grayish-white deposits of potassium carbonate may be seen on the cell tops; these deposits form the electrolyte entrained in the escaping gas reacts with the carbon dioxide in the air. This deposit is not corrosive but is a conductor when damp, and needs to be removed from the battery.

(1) Parameters. The flooded lead-acid material data discussed previously can be used for maintaining ni-cad cells by changing parameters appropriate for alkaline cells. Float voltages for ni-cad cells are significantly different from those for lead-acid cell. Although the battery terminal voltage may be the same, the number of cells will be different since a lead-acid cell is a nominal 2-volts per cell with a ni-cad battery is a nominal 1.2-volts per cell.

(2) Neutralizing agent. Use a boric acid solution of 7 ounces of boric acid to one gallon of water.

i. Safety. Every UPS battery installation presents safety hazards and safety precautions cannot be ignored. The three major hazards are from the electrolyte in the battery, the gases emitted by the battery, and the potential electrical hazard available from the stored energy of the battery. Most persons trained in an electrical environment are aware that batteries are dangerous, but need to be warned and advised again as to the extent of the hazards posed by UPS battery systems both large and small, flooded, and valve-regulated.

(1) Warnings. All batteries contain an acid or alkaline solution. While the gases from a ni-cad electrolyte are not toxic, the ni-cad electrolyte is corrosive as is the dilute sulfuric-acid electrolyte of lead-acid batteries. All batteries are capable of out-gassing.

(2) Electrolyte hazard. Battery rooms are required by OSHA to provide quick drenching facilities for the eyes and body within 25 feet of the work area for emergency use. Where emergency eyewash and showers are not provided, there are many portable devices which can be brought into a computer room. Squeeze bottles can substitute for eyewash fountains and canisters that look much like fire extinguishers can be fitted to provide eyewash or quick drench. When using these devices, be sure to change the water as recommended. This prevents the growth of bacteria. Squeeze bottles are date coded and should be replaced before the expiration date. The canister units should be exercised periodically to prevent clogging of the head so that a good flow of water is available when it's really needed.

(3) Explosive gas hazard. All batteries present a potentially deadly shock hazard and produce hydrogen gas, which is explosive in the right concentration. Therefore, there is a need for removal of possible explosive gas buildup.

(4) Electrical hazard. An UPS battery is operated ungrounded, so touching a live part will not result in a shock. The real hazard exists when an accidental ground is already present and a person touches a live part. In this case, the person completes the circuit to ground and current will flow through the person. Sometimes personnel may recognize that the hazard exists but do not seem concerned because the cell voltage is only 1.2 to 2 volts per cell nominal. Another hazard is when an accidental connection between positive and negative points is such as to cause a dangerous potential gradient.

(a) Possible effects. Batteries used for large UPS systems often contain 188 or 192 individual cells connected in series (to form a string) representing approximately 500 volts. In addition, multiple strings may be connected in parallel to serve an UPS system. Another fact to consider is the short-circuit current a battery can deliver. The short-circuit capability of any battery can be obtained from the manufacturer. For example, a battery of one manufacturer that provides backup for a 500 kVA UPS for 15 minutes is capable of delivering approximately 23,000 amperes into a zero-resistance short circuit.

(b) Accidental grounds. It is not uncommon to find that a ground does exist on a battery. One way in which this occurs is that electrolyte on top of a cell will track across the cover, down the plastic jar, and contact a metallic part of the rack. The electrolyte, being conductive, establishes the ground path.

(c) Normal safety procedures. When working around batteries, all normal safety procedures should be followed, including the use of protective equipment and tools with insulated handles. Generally, a ground detector is provided as part of the dc system, most often in the rectifier-charger. Be certain to check the ground detector before starting work. If an unintentional ground exists, it should be cleared before work begins.

j. Troubleshooting. Questionable battery system performance means that all the service checks required under annual inspections will need to be made. Generally, any cell which demonstrates conditions beyond the manufacturer's recommended parameters should be replaced and the system rechecked to ensure all suspect cells have been removed. Where widespread premature battery failures are encountered, the battery manufacturer's service department should be contacted for further instructions. If low or high float voltages, temperature variations, visual deviations or bulges, low open-circuit voltages, and low 10 second full-load voltages all exceed the manufacturer's parameters, the cells are probably irreparably damaged.

GLOSSARY

Section I
Abbreviations

ac
Alternating Current

AGM
Absorbed (or Absorptive) glass mat

ANSI
American National Standards Institute

C4ISR
Uninterruptible Power Supply System Selection, Installation, and Maintenance for Command, Control, Communications, Computer, Intelligence, Surveillance, and Reconnaissance (C4ISR) Facilities

CBEMA
Computer Business Equipment Manufacturers Association

dc
Direct Current

EM
Electromagnetic

FCC
Federal Communications Commission

FET
Field Effect Transistors

GTO
Gate Turn Off

HVAC
Heating, Ventilation, and Air Conditioning

IEC
International Electrotechnical Commission

IEEE
Institute of Electrical and Electronic Engineers

IGBT
Insulated Gate Bipolar Transistors

IITRI
IIT Research Institute

ITIC
Information Technology Industry Council

kW
Kilowatt

MDT
Mean Downtime

M-G
Motor-Generator

MOSFET
Metal Oxide Field Effect Transistor

ms
Millisecond

MTBD
Mean Time Between Demand

MTBF
Mean Time Between Failure

MTTF
Mean Time To Failure

MTTR
Mean Time To Repair

MVA
Mega Volt Amperes

NEC
National Electrical Code

NEMA
National Electrical Manufacturer's Association

NFPA
National Fire Protection Association

Ni-Cad
Nickel-Cadmium

PCB
Printed Circuit Board

PWM
Pulse Width Modulation

RF
Radio Frequency

RFI
Radio Frequency Interference

RMS
Root Mean Square

rpm
Revolutions Per Minute

SCR
Silicon Controlled Rectifier

SLA
Sealed Lead-Acid (also see VRLA)

THD
Total Harmonic Distortion

TM
Technical Manual

UL
Underwriters Laboratories

UPS
Uninterruptible Power Supply

VRLA
Valve Regulated Lead-Acid

Section II
Terms

Absorbed (or Absorptive) Glass Mat (AGM)
In an AGM cell, the electrolyte is absorbed and held in place with a microfibrous silica glass mat sandwiched between the plates. The electrolyte is and remains liquid for the entire battery life. The glass mat is only about 90 percent saturated with electrolyte, therefore, oxygen produced during charge can readily migrate to the negative plate and recombine into water. This recombination mechanism, along with charge voltage control, substantially eliminates water loss, making the AGM batteries as non-spillable and maintenance-free as possible. Properly supported, AGM batteries with absorbed electrolyte can be installed and operated on their side.

Active Redundancy
[see Redundancy (active)]

Alternate Power Source
[see Power Source (alternate)]

Availability
In its simplest definition, availability is uptime divided by downtime. In terms of reliability (MTBF or MTBD) and maintainability (MTTR or MDT), inherent and operational availability are defined as:

$$\text{Inherent availability} = \text{Ai} = \frac{\text{MTBF}}{\text{MTBF} + \text{MTTR}}$$

$$\text{Operational availability} = \text{Ao} = \frac{\text{MTBD}}{\text{MTBD} + \text{MDT}}$$

Backup Time
Time during which the UPS can supply the rated load with nominal-quality power while the mains are down. This time depends on the battery and the efficiency of the UPS. Typical backup ranges from five minutes to several hours.

Battery
A device that converts chemical energy into electrical energy by means of an electrochemical reaction. Usually defined as consisting of two or more cells, but commonly used to refer to one cell.

Battery (flooded cell)
An electrolyte filled vented cell.

Battery (recombination)
Battery with a gas recombination rate at least equal to 95 percent, i.e., no water need be added over battery life. Usually called “maintenance free.”

Battery (tier-mounted)
Battery cell installation system whereby the cells are placed on tiers made of insulating material.

Battery (vented cell)
The battery cells are equipped with a filling port for distilled, demineralized water used to top up the free electrolyte.

Battery Cells
The interconnected battery elements that supply electrical power created by electrolytic reaction.

Battery Circuit Breaker
[see Circuit Breaker (battery)]

Battery Monitor
Battery monitoring and protection system developed and patented by MGE UPS SYSTEMS for UPS systems. It incorporates software to calculate the real available backup time, predicts when batteries need replacement, and is a protection system against excessive discharges.

Battery on Shelves
Battery cell installation system whereby the cells are placed on several vertically stacked shelves or racks made of insulating material.

BEM (Building and Energy Management) System
System used for control/monitoring of all building utilities and systems. It is generally composed of sensors, actuators, and programmable controllers connected to a central computer or several computers, equipped with specific software.

Brownout
Conditions under which power is available but not sufficient to fully meet the needs (voltage, current) of the load.

BS (British Standard)
Label used to indicate compliance with British standards.

Bypass
The use of parallel units in an UPS to increase capacity or for redundancy.

Bypass (automatic)
In the event of an overload or an unlikely UPS problem, your application is still powered thanks to the automatic bypass module.

Bypass (manual)
Manually operated switch used to supply the load via direct connection to utility power during servicing of the UPS system.

Capacity (battery)
The number of ampere-hours (Ah) a fully charged cell or battery can deliver under specified conditions of discharge.

Cell
The basic electrochemical element of a battery.

Charge (equalizing)
An extended charge to a measured end point that is given to a storage battery to insure the complete restoration of the active materials in all the plates of the cells.

Charger
Device associated with the rectifier and used to supply the battery with the electrical power [direct current (dc)] required to recharge and/or float charge the battery, thus ensuring the rated backup time.

Circuit Breaker (battery)
DC circuit breaker that protects the battery of an UPS.

Cos phi
A measure of the phase shift between the current wave and the voltage wave observed at the terminals of a load supplied with ac power at a given frequency.

Cos phi1
A measure of the phase shift between the fundamental current wave and the fundamental voltage wave observed at the terminals of a non-linear load .

Crest Factor (Fc)
Ratio between the peak current value to the root mean square (RMS) current value.

Cubicle (parallel UPS unit)
Cubicle containing a rectifier/charger and an inverter. It is connected to one or several other identical cubicles and a bypass cubicle to make up a parallel UPS.

Cubicle (single UPS unit)
Cubicle containing a rectifier/charger, an inverter, and a bypass. Connected to a battery, it operates alone, forming a single UPS. Compare with cubicle (parallel UPS unit).

Current (float)
DC current that maintains the battery at nominal charge, corresponding the float voltage. This current compensates open circuit losses.

Current (inrush)
Temporary current observed in a network when electrical devices are energized, generally due to the magnetic circuits of the devices. The effect is measured by the current's maximum peak value and the RMS current value it generates.

Current Harmonics
[see Harmonics (current and voltage)]

Current Loop (20 mA)
Transmission system used on certain devices and offering better performance than the RS232C. It provides a high degree of immunity to interference and is easy to implement, but has not been standardized.

Cycle
A battery discharge followed by a complete recharge. A deep (or full) cycle is described as the removal and replacement of 80 percent or more of the cell's design capacity.

Cycling
The repeated charge/discharge cycle of a storage battery. Some batteries are rated by their ability to withstand repeated, deep discharge cycles.

Diagnostics
Manual, automated, and semi-automatic methods and procedures for identifying and isolating a failure in an item.

Discharge Rate
The rate at which a cell or battery delivers current (e.g., 200 amperes over 10 hours is a rate of 20 amperes per hour).

Distortion (individual)
Ratio between the RMS value of an nth order harmonic and the RMS value of the fundamental.

Distortion (total)
Ratio between the RMS value of all harmonics of a non-sinusoidal alternating periodic value and that of the fundamental. This value may also be expressed as a function of the individual distortion of each harmonic
Hn = Yn /Y1.

Earthing System
System for the interconnection and earthing of exposed conductive parts and neutral. There are three types of neutral systems: IT, TN, TT.

Earthing System IT
Earthing system in which the neutral is isolated from the earth or connected to the earth via a high impedance and the various exposed conductive parts are connected to the earth via individual earthing circuits. An alarm must signal the appearance of a first insulation fault. The installation must be de-energized immediately in the event of a second insulation fault.

Earthing System TN
Earthing system in which the exposed conductive parts are interconnected and connected to the neutral. The neutral is connected to the earth. The installation must be de-energized immediately in the event of an insulation fault.

Earthing System TT
Earthing system in which the neutral and the exposed conductive parts are directly earthed. The installation must be de-energized immediately in the event of an insulation fault.

Electrode
The electrical connector and the associated active materials at which an electrochemical reaction occurs. Also referred to as the positive and negative plates in a secondary cell.

Electrolyte
The medium that provides the ion transport function between the positive and negative electrodes of a cell. In lead-acid batteries, the electrolyte is a mixture of water and sulfuric acid. A nickel-cadmium (ni-cad) cell uses a dilute alkaline mixture of potassium hydroxide in water.

Electromagnetic (EM) Compatibility
Possibility of a device to operate normally when installed near other devices, given the disturbances emitted by each device and their mutual sensitivities.

Emergency Power
An independent reserve source of electric energy that, upon failure or loss of the primary source, provides reliable power within a specified time to critical devices and equipment which, if they fail to operate satisfactorily, would jeopardize the health and safety of personnel, result in property damage, or cause loss of revenue.

Ferroresonant
An interactive UPS configuration in which a ferroresonant transformer is used to magnetically couple the ac input to the load.

Field Effect Transistor (FET)
A solid-state device in which current is controlled between source and drain terminals by voltage applied to a non-conducting gate terminal.

Filter (phase-shift)
Filter used to reduce, if necessary, the overall distortion due to the current harmonics injected into the mains upstream of an UPS by its rectifier-charger. Filtering is superior to that of a traditional filter of the L or C type.

Float Charge
Commonly used for applications in which the battery is only infrequently discharged, charging conducted with the charger, battery, and load in parallel. The charger operates off the normal power supply.

Float Current
[see Current (float)]

Floating Voltage
[see Voltage (float)]

Fourier Theorem
Theorem stating that any non-sinusoidal periodic function (frequency f) may be represented as a sum of terms (series) made up of a sinusoidal term with frequency f, called the fundamental frequency, n sinusoidal terms with frequencies that are whole multiples of the fundamental frequency, (harmonics), and a possible dc component. Where n is a whole number. n = 1 corresponds to the fundamental, n > 1 to the harmonic of the nth order.

Gell-Cell
Refers to a battery in which the electrolyte consists of a mixture of finely divided silica or sand mixed with a sulfuric acid solution. The gelled electrolyte is highly viscous and during charge and discharge can develop voids or cracks that impede acid flow and result in loss of battery capacity.

Harmonic
Sinusoidal term of the Fourier series expansion of a periodic function. The harmonic (or harmonic component) of the nth order is characterized by: Yn is the root mean square (RMS) value of the given harmonic component, w is the angular frequency of the fundamental, related to frequency by: w = 2^1f; phin is the phase angle of the given harmonic component at t = 0.

Harmonics
Distortions of the sine-wave that characterizes normal ac current. Harmonics are transmitted into an ac line by non-linear loads (i.e., loads that do not draw power in regular sine waves), such as computers, copiers, FAX machines, and variable-speed motors. Harmonics can cause communication errors and equipment damage. In three-phase systems, they can cause transformers and neutral conductors to overheat creating a possible fire hazard.

Harmonics (current and voltage)
All ac which is not absolutely sinusoidal is made up of a fundamental and a certain number of current harmonics which are the cause of its deformation (distortion) when compared to the theoretical sine-wave. For each current harmonic of order n and an RMS value In, there is a voltage harmonic with a RMS value Un. If Zsn is the voltage source output impedance for the harmonic of the nth order, then: Un = Zsn x In.

High-Frequency Interference
[see Interference (high frequency)]

Hybrid UPS
(see UPS, Hybrid)

Individual Distortion
[see Distortion (individual)]

Inrush Current
[See Current (inrush)]

Insulated Gate Bipolar Transistor (IGBT)
The IGBT is a minority carrier device and is fundamentally different in operation than a MOSFET, although they are similar in cross section.

Interference (high-frequency)
High-frequency parasitic current that is either conducted (electrostatic origin) or radiated (EM origin) by a device.

International Electrotechnical Commission (IEC)
Advisory organization that draws up international standards in the electrotechnical field.

Inverter
A device for converting dc to ac current.

Inverter
UPS subassembly that recomposes a sine-wave output (regulated and without breaks) using the dc current supplied by the rectifier-charger or the battery. The primary elements of the inverter are the dc/ac converter, a regulation system, and an output filter.

Inverter (off-line or stand-by)
UPS configuration in which the inverter is parallel-mounted to the load supply line and backs up the mains. This configuration offers a substantial cost reduction but is applicable only to low outputs, under 3 kVA, because it results in an interruption lasting up to 10 milliseconds (ms) during transfer and does not filter inrush currents.

Inverter (on-line)
UPS configuration in which the inverter is in series mounted between the mains and the load. All power drawn by the load passes via the inverter. This is the only configuration used for high outputs.

IP (protection index)
[see Protection index (IP)]

ISO 9000
Standard defining procedures and systems used to attain an internationally recognized level of production quality. ISO 9000 certification is proof that the quality system effectively complies with the standard. Certification is carried out by an official organization (AFAQ), unaffiliated with either clients or suppliers or the company itself, and is valid for a three-year period with yearly audits and checks.

Kilo Volt Amperes (kVA)
The product of the voltage and the amperes expressed in units of thousands. The resultant is total system power.

Kilowatt (kW)
The product of the voltage and the amperes and the power factor expressed in units of thousands. The resultant is "real" system power.

Life Cycle Cost (LCC)
The total costs incurred in the acquisition, operation and maintenance, and disposal of an item. For an UPS, from a customer perspective, life cycle cost includes the purchase price, installation costs, operating and support costs, and disposal costs.

Line-Interactive
An UPS configuration in which line power is fed directly into the load through a series inductor or transformer.

Load (linear)
Load for which voltage form and current form are similar. Voltage and current are related by Ohm's law U(t) = Z x I(t).

Load (non-linear)
Load (generally with a switched-mode power supply) generating major harmonic currents. Current wave form is different from voltage wave form. Ohm's law is not applicable. It can be used only with each harmonic.

Load Power
Apparent power Pu that the UPS inverter supplies under given load conditions. It is less than or equal to the rated output Pn. The ratio Pu/Pn defines the percent load of the inverter.

Load Shedding
The process of deliberately removing pre-selected loads from a power system in response to an abnormal condition to maintain the system's integrity.

Maintainability
Relative ease and economy of time and resources with which an item is retained in, or restored to, a specific condition when maintenance is performed by personnel having specified skill levels, using prescribed procedures and resources, at each prescribed level of maintenance and repair. Measures include probability to repair within a given time, repair rate, and mean time to repair.

Manual Bypass
[see Bypass (manual)]

Mean Downtime (MDT)
The mean time during which an item is not available for operation for any reason, including active maintenance, lack of parts, lack of maintenance personnel, etc.

Mean Time Between Demand (MTBD)
A measure of reliability that addresses all reasons for support. Demands can result from inherent failures of the item, failures caused by operators or maintenance personnel (induced failures), preventive maintenance requirements, etc.

Mean Time Between Failure (MTBF)
A measure of reliability. Usually denotes the time between inherent failures (i.e., failures caused by a physical or chemical phenomena within the item.)

Mean Time To Failure (MTTF)
Mathematical calculation of the duration of normal operation of a non-reparable device, i.e., for which a MTBF is not possible. The product, expressed in hours, is an indication on the reliability of the device.

Mean Time To Repair (MTTR)
A measure of maintainability. Mathematical calculation (or statistical average if available) of the time required to repair a device.

Mega Volt Amperes (MVA)
The product of the voltage and the amperes expressed in units of millions. The resultant is total system power.

Micro-Outage
Total loss in the supply of power for 10 ms.

Monitor (system interface)
User interface on the Galaxy range of UPS systems. This interface includes an LCD alphanumeric display with two lines of 20 characters each and is used in conjunction with the Signal 4 interface.

Motor-Generator (M-G)
Power systems that use a rotating ac generator to generate the needed output power. A motor-generator that is powered by a battery or a diesel or gas-powered engine when utility power is lost, constitutes a rotary or hybrid UPS.

Noise level
Acoustical decibel level of a source of noise, measured according to the applicable ISO standard.

Non-Linear Load
(see Load)

No-Ox-Id
No-ox-id is a soft, wax based rust preventive lubricant. It contains a small amount of solvent for ease of application with a brush. It is non-drying and retains its properties indefinitely.

Off-Line Inverter
(see Inverter)

Off-Line or Standby
An off-line, or standby, UPS is switched on to power the load only when the primary power source is lost or fails. The interval of time from when the utility power is lost and the UPS picks up the load can range from 2 to 20 ms.

On-Line
An UPS that continuously powers the load from the inverter.

On-Line Inverter
(see Inverter)

Output (rated)
Apparent power Pn that the UPS can deliver under given load conditions (power factor = 0.8).

Overall Distortion
[see Distortion (overall)]

Oversizing
Increasing the capacity of an UPS beyond that required to exactly meet the needed power requirements. Oversizing allows an UPS to efficiently and effectively handle surges and provides for growth in the power requirements.

Overvoltage
Sudden increases in voltage on one or more phases of ac power caused by large changes in the electrical load or from utility power switching.

Parallel UPS Cubicle
[see Cubicle (parallel UPS unit)]

Parallel UPS with Redundancy
[see UPS (parallel with redundancy)]

Parallel UPS without Redundancy
[see UPS (parallel without redundancy)]

Percent Load
Ratio between the power Pu drawn by the load and the rated output Pn of an UPS system (Pu/Pn). Sometimes referred to as the load factor. Phase-shift filter [see Filter (phase-shift)].

Power Factor
The power factor is the mathematical relationship between apparent or effective power, measured in kVA, and real or average power, measured in kW. When the current and voltage are in phase, purely resistive load, the power factor is 1. In a purely reactive load in which voltage and current are 90° out of phase, the power factor is 0.

Power factor (l)
Ratio between the active power P supplied to a load and the apparent power S supplied to said load by an ac power supply.

Power Source (alternate)
Backup source used in the event of a mains failure. The connection time and the duration of the source depend on the type of source used.

Power Source (safety)
Power source for loads defined as critical by applicable safety regulations. This supply must not be affected by a mains failure and is generally separate from other supplies.

Primary Cell or Battery
A cell or battery that is not intended to be recharged and is discarded at the end of its useful life.

Prime Power
The normal source of power used continuously day and night. Usually supplied by an electric power utility but can be supplied by base-loaded user-generation.

Protection Index (IP)
Index indicating the capacity of an electrical device to resist environment conditions. It is made up of three digits (e.g., IP 205), each corresponding to a type of environmental risk. The higher the number, the greater the capacity to resist. First digit (0 to 6): capacity to resist penetration by solid objects. Second digit (0 to 7): capacity to resist penetration by liquids. Third digit (0, 1, 2, 3, 5, 7, 9): mechanical strength.

Pulse Width Modulation (PWM)
Inverter high-frequency chopping technique using a means of regulation enabling rapid modification of pulse widths over a single period. This makes it possible to maintain the inverter output within tolerances even for non-linear loads.

Radio Frequency Interference (RFI)
An unwanted electromagnetic signal that degrades the performance of the electronic device.

Rated Output
[see Output (rated)]

Reactance
Relative measurement (percent) of the internal impedance of an ac generator during harmonic phenomena. This reactance, also called the longitudinal subtransient reactance of the generator, is sometimes identified as X”d. For most common generators, the value ranges between 15 and 20 percent. It can drop to 12 percent for optimized systems and to 6 percent for special devices.

Recombinant Battery
A battery in which the cells are sealed with pressure relief valves that confine any gases produced during cell operation. These gases are then recombined back into water, substantially eliminating the loss of water from the cells and the need for water replenishment.

Recombination Battery
[see Battery (recombination)]

Rectifier
A device for converting ac to dc.

Rectifier/charger
UPS component that draws on the mains the power required to supply the inverter and to float charge or recharge the battery. The alternating input current is rectified and then distributed to the inverter and the battery.

Redundancy (active)
Parallel UPS configuration in which several UPS units with equal outputs are parallel connected and share the load. In the event one UPS unit fails, the other units pick up its share without any interruption in the supply of power to the load.

Redundancy (standby)
UPS configuration in which one or several UPS units operate on standby, with no load or only a partial load, and can immediately back up a faulty UPS unit by no-break transfer of the load, carried out by a static switch.

Reliability
The probability that an item will perform as intended for a specified period of time under a stated set of conditions. Usually measured as a probability, a failure rate, or a mean time between failures.

Reliability
Probability that a device will accomplish a required function under given conditions over a given period of time. RMS value of ac with harmonics. The RMS value Yrms of a non-sinusoidal ac may be determined on the basis of the individual harmonic currents: where Y is the RMS value of the fundamental.

Reliability Centered Maintenance (RCM)
A maintenance program established to maximize the equipment reliability.

Rotary UPS
(see UPS, Rotary)

RS232C (recommended standard RS232C)
Standard defining the communication circuits between devices for synchronous and asynchronous transmissions on the following types of lines: two-wire, four-wire, point-to-point, telephone lines, and local links with short cables. Though the standard covers only transmissions over distances up to 15 meters, it is often possible to ensure correct transmission over greater distances using high-quality shielded cable in a reasonably satisfactory electrical environment. Most terminals and devices on the market can implement this transmission standard.

RS422A (Recommended standard RS422A)
Standard RS232C is sufficient for transmissions in a normal environment. For transmissions in a disturbed environment or over long distances, standard RS422A offers a differential operation option, with a balanced voltage, ensuring far superior performance. What is more, it can be used for multipoint links, with generally up to ten connection points (one sender and up to ten receivers).

RS485 (recommended standard RS485)
This standard is similar to RS422A except that the number of possible links is greater and up to 32 senders may be interconnected to as many receivers. This system is particularly designed for local-area networks.

Safety Installation
Installation supplying electrical equipment which may have a direct effect on the safety of users and must therefore remain energized even in the event of a main failure. In general, characteristics concerning the power supply and conditions for transfer to the safety source for such electrical equipment are covered by applicable regulations.

Safety Power Source
[see Power Source (safety)]

Sag
A low-voltage condition in which the voltage on one or more phases of ac power falls below 80 to 85 percent of the nominal value for more than one cycle (1/60th of a second for 60-cycle ac). Can be caused by ground faults, starting large loads, inadequate power supply, utility switching, utility equipment failure, and lightning. Can cause computer crashes and damage equipment.

Secondary Battery
A battery that may be restored to its charged state after discharge by passing an electrical current through the cell in the opposite direction to that of discharge. Also called a storage or rechargeable battery.

Single UPS
[see UPS (single)]

Single UPS Cubicle (see Cubicle)
[single UPS (unit)

Standby Power
An independent reserve source of electric energy that, upon failure or loss of the prime source, provides electric power of acceptable quality so that the facility may continue operation in a satisfactory manner (which could include an orderly shutdown).

Standby Redundancy
[see Redundancy (standby)]

Static Bypass Switch
Power-electronics device that can be used to switch from one source to another without interruption in the supply of power. In an UPS, transfer is from Mains 1 to Mains 2 and back. Transfer without interruption is possible due to the fact that there are no mechanical parts and the ultra-fast switching capabilities of the electronic components.

Static UPS
[see UPS (static)]

Subtransient Reactance of Generator
(see Reactance)

Surge
A high voltage condition in which the voltage on one or more phases of ac power exceeds 100 percent of the nominal value for more than one cycle (1/60th of a second for 60-cycle ac). Can be caused by a rapid load reduction or switching, and can damage equipment.

Thermal Runaway
A condition that is caused by a battery charging current that produces more internal heat than the battery can dissipate. This condition ultimately causes cell venting and premature failure.

Thevenin Generator
For a given load, it is possible to consider the power supply as a voltage generator, referred to as a Thevenin generator, made up of a perfect voltage Uo generator, in series with an internal impedance Zs: n Uo is the voltage measured across the load terminals, given that the load is to be disconnected (load terminals forming an open circuit), n Zs is the equivalent impedance as seen

from the load terminals (again considered an open circuit), obtained by short-circuiting the upstream voltage generator(s).

Tolerance in Percent
Limit for allowable variations for a given quantity, expressed as a percent of the rated value.

Transformer Short-Circuit Voltage
Relative measurement (percent) of the internal impedance of a transformer. This short-circuit impedance is commonly called the short-circuit voltage because it is measured during a short-circuit test (shorted secondary winding subjected to a current set to In). For most common three-phase transformers, this value ranges between 3 and 6 percent.

Transients
Disturbances to electrical power lasting less than one cycle ($1/60^{th}$ of a second for 60-cycle ac). Also referred to as voltage spikes. Can be caused by lightning strikes, sudden load-shedding on the primary power system, shutdown of equipment that was drawing an extremely large amount of power, or a general rise in voltage on the primary power system after use by a large number of consumers. Voltage spikes can blow fuses or trigger circuit breakers, destroy electronic circuitry, and corrupt stored data.

Underwriters Laboratories (UL)
UL is a non-governmental, non-profit certification organization in the United States in which not only government authorities are represented, but also consumer groups, “export” services, research, etc. Following certification, a product may bear the UL label.

Uninterruptible Power Supply (UPS)
An electrical device providing an interface between the mains power supply and sensitive loads (computer systems, instrumentation, etc.). The UPS supplies sinusoidal ac power free of disturbances and within strict amplitude and frequency tolerances. It is generally made up of a rectifier/charger and an inverter together with a battery for backup power in the event of a mains failure.

Uninterruptible Power System (UPS)
Also used as the abbreviation for uninterruptible power supply. The latter is most often used for static (battery) backup power supplies for personal computers and other equipment with similar power requirements. UPSs include uninterruptible power supplies as well as more complex systems (e.g., rotary, hybrid, etc.).

UPS (parallel with redundancy)
An UPS made up of several parallel-connected UPS units with equal output ratings (P) and each equipped with its battery. If one unit fails, one or several of the others pick up the resulting excess load. If an UPS has a rated output n x P and is made up of n + k units, k is the level of redundancy for the entire set of n + k units.

UPS (parallel without redundancy)
An UPS made up of several (n) parallel-connected UPS units with equal output ratings (P) and each equipped with its battery, for large loads. The total output is equal to the number of units multiplied by their individual output (n x P). In this configuration, no UPS unit is redundant.

UPS (single)
An UPS made up of one single UPS unit (rectifier/charger, inverter, and bypass) and a battery.

UPS, Hybrid
An UPS that combines the features of both a static and rotary UPS.

UPS, Multiple-Unit
An UPS in which two or more units share the load but neither can carry 100 percent of the load.

UPS, Parallel-Redundant
An UPS in which two or more units are arranged in parallel and each can carry 100 percent of the load.

UPS, Parallel-Unit
An UPS in which two or more units are arranged in parallel and not all units are required to carry 100 percent of the load.

UPS, Rotary
An UPS in which a M-G set is used.

UPS, Single Unit
An UPS in which one unit carries 100 percent of the load.

UPS, Static
A solid-state UPS relying solely on battery power.

Useful Life (battery)
The time over which a battery can deliver a useful (normally defined as 80 percent or more of the battery's capacity) amount of power.

UTE (Union Technique de l'Electricité)
French electrotechnical standards organization.

VDE
German electrotechnical standards organization.

Vented Battery
[see Battery (vented)]

Voltage (equalize)
The voltage applied during an equalizing charge. This voltage is sufficiently high to ensure that the local action of all cells is overcome.

Voltage (float)
DC voltage applied to the battery to maintain its charge level. This voltage depends on the type of battery, the number of cells, and the manufacturer's recommendations.

Volt Amperes (VA)
The product of the voltage and the amperes. The resultant is total system power.

Voltage Harmonics
[see Harmonics (current and voltage)]

Valve-Regulated Lead-Acid (VRLA)
A "sealed" battery in which the electrolyte is immobilized, a relief valve opens when the internal pressure (caused by oxygen and hydrogen generation) exceeds a predetermined value. VRLA provide a means of recombination of internally generated oxygen and suppression of hydrogen gas evolution to limit water consumption. The electrolyte is immobilized by using an absorbent separator (e.g., AGM) or a gelling agent.

Walk-In
The slow transfer of power from the battery back to the utility over a 10-20 second interval.

INDEX

A

acceptance test, 4-12
acceptance testing, 1-1
asynchronous motor, 2-29
availability, 1-3, 2-40, 3-1, 3-2, 3-6, 3-7, 3-8, 3-10, 3-12, 3-13, 4-4, 4-7

B

batteries, 1-1, 1-3, 2-20, 2-22, 2-24, 3-6, 4-1, 4-4, 4-7, 4-14, 5-16
battery, 1-1, 1-3, 2-1, 2-2, 2-3, 2-4, 2-5, 2-20, 2-21, 2-22, 2-23, 2-24, 2-25, 2-29, 2-30, 2-31, 2-32, 2-33, 2-35, 2-36, 2-38, 2-39, 3-7, 3-10, 3-11, 3-13, 3-14, 3-15, 3-16, 3-17, 3-18, 3-20, 4-1, 4-2, 4-3, 4-4, 4-6, 4-7, 4-13, 4-14, 4-15, 4-17, 4-18, 4-19, 4-20, 4-21, 5-1, 5-2, 5-3, 5-4, 5-5, 5-6, 5-7, 5-8, 5-9, 5-10, 5-11, 5-12, 5-13, 5-14, 5-15, 5-16
battery charging, 2-22
battery sizing, 3-16
bipolar transistors, 2-6, 2-7
blocking diode, 2-6

C

checklists, 1-1
controlled rectifiers, 2-9
corrective maintenance, 1-4, 5-4
crest value changes, 2-27
current limit, 2-5, 2-25, 3-16, 3-18, 4-8
cycling effects, 2-23

D

DC generators, 2-31
DC motors, 2-30, 2-31, 3-19

E

emergency power, 1-1, 2-22, 3-1, 3-6
exciters, 2-31

F

ferroresonant transformer, 2-5, 2-15, 2-17
field effect transistors (FET), 2-6, 2-7, 2-8
filtered power, 2-29
flywheel, 2-29, 2-30, 2-31, 2-32, 2-36, 2-37, 2-38, 3-18, 3-19, 3-20

G

generator, 1-2, 2-26, 2-28, 2-29, 2-30, 2-31, 2-32, 2-33, 2-36, 2-37, 2-38, 2-39, 3-6, 3-13, 3-18, 3-19, 3-20, 4-6, 4-13, 4-16, 4-17, 4-19, 4-21, 4-22
grounding, 1-1, 4-7, 4-9

H

harmonic correction techniques, 2-28
harmonic distortion, 1-1, 2-25, 3-14
harmonics, 2-1, 2-17, 2-26, 2-27, 2-28, 4-10

I

induction coupling, 2-31
induction motors, 2-30, 3-19
inrush current, 2-4, 2-5, 2-25, 2-33, 3-16, 3-18, 4-8
installation, 1-1, 2-4, 2-28, 2-33, 3-1, 3-6, 3-10, 3-11, 3-12, 3-13, 3-15, 3-16, 3-17, 3-19, 4-7, 4-11, 4-12, 4-14, 4-15, 4-17, 5-4, 5-5, 5-7, 5-8, 5-9, 5-13, 5-15
insulated gate bipolar transistor (IGBT), 2-6, 2-8, 2-14
inversion, 2-14
inverter, 1-1, 2-1, 2-2, 2-5, 2-6, 2-7, 2-14, 2-15, 2-16, 2-17, 2-18, 2-20, 2-25, 2-29, 2-30, 2-32, 2-33, 2-34, 2-35, 2-37, 2-39, 3-16, 3-17, 4-1, 4-2, 4-3, 4-4, 4-7, 4-8, 4-14, 5-3

K

kinetic battery, 2-29

L

latching devices, 2-7
lead-acid batteries, 2-20
lower power factor, 2-27

M

maintenance, 1-1, 1-3, 1-4, 2-3, 2-4, 3-11, 4-1, 4-20, 4-22, 5-1, 5-2, 5-4, 5-5, 5-7, 5-8, 5-9, 5-12, 5-14
maintenance bypass switch, 2-3
memory effect, 2-25
motor, 1-2, 2-20, 2-29, 2-30, 2-31, 2-32, 2-36, 2-37, 2-38, 2-39, 3-15, 3-18, 3-19, 3-20, 4-6, 4-13, 4-15, 4-16, 4-19

N

neutral harmonic behavior, 2-27
nickel-cadmium batteries, 2-20, 2-22, 5-6, 5-15
noise feedback, 2-28
nonlinear loads, 2-25, 2-32

O

operations, 1-1

P

power, 1-1, 1-2, 1-3, 1-4, 2-1, 2-2, 2-3, 2-4, 2-6, 2-7, 2-8, 2-9, 2-14, 2-15, 2-18, 2-20, 2-21, 2-22, 2-23, 2-25, 2-26, 2-27, 2-28, 2-29, 2-30, 2-31, 2-32, 2-33, 2-34, 2-35, 2-36, 2-37, 2-38, 2-39, 2-40, 3-1, 3-2, 3-6, 3-7, 3-8, 3-9, 3-10, 3-13, 3-15, 3-16, 3-17, 3-18, 3-19, 3-20, 4-1, 4-2, 4-6, 4-7, 4-8, 4-9, 4-10, 4-11, 4-12, 4-13, 4-14, 4-15, 4-16, 4-17, 4-21, 5-1, 5-3, 5-4, 5-5, 5-13
power diodes, 2-9
power requirements, 3-6
preventive maintenance, 1-4, 5-1, 5-5
probability, 3-8, 5-2
protective devices, 1-3, 3-16, 4-7, 4-8, 4-9
pulse width modulation (PWM), 2-5, 2-15, 2-16, 2-17

R

rectification, 2-8
rectifier, 1-1, 2-1, 2-2, 2-5, 2-6, 2-8, 2-9, 2-10, 2-11, 2-12, 2-25, 2-26, 2-29, 2-32, 2-33, 2-35, 2-36, 2-39, 4-3, 4-17, 4-20, 4-22, 5-3, 5-4, 5-6, 5-8, 5-9, 5-10, 5-13, 5-15, 5-16
reliability, 2-20, 2-21, 2-28, 2-33, 2-34, 2-35, 2-36, 2-37, 2-38, 2-39, 2-40, 3-1, 3-7, 3-8, 3-9, 3-10, 3-11, 3-20, 5-1, 5-2, 5-8
ripple currents, 2-25
rotary UPS, 1-1, 1-2, 1-4, 2-29, 2-30, 2-31, 2-32, 2-33, 2-36, 2-37, 3-13, 3-18, 3-20, 4-6, 4-7, 4-13, 5-5

S

safety, 3-6, 4-22, 4-23, 5-1, 5-5, 5-15, 5-16
SCR, 2-1, 2-3, 2-4, 2-6, 2-7, 2-14, 2-15, 2-16, 2-17, 2-18, 2-19, 4-20, 4-21
shielding, 1-4, 4-7, 4-10
single-phase uncontrolled rectifiers, 2-8
sizing selection, 1-1
standby power, 1-1, 3-1, 3-6
static switch, 1-2, 2-1, 2-2, 2-20, 2-33, 2-35, 2-36, 2-39, 4-8, 4-17, 4-19
static transfer switch, 2-18, 2-20, 2-33, 2-34, 2-36, 3-16, 3-18, 4-8
static UPS, 1-1, 1-2, 2-1, 2-6, 2-14, 2-20, 2-22, 2-25, 2-26, 2-31, 2-32, 2-33, 2-35, 2-36, 2-39, 2-40, 3-13, 3-15, 3-16, 3-17, 3-18, 4-1, 4-2, 4-7, 5-5
synchronous motor, 2-29, 2-37, 4-6
system rating, 1-1, 3-18

T

testing, 1-3, 1-4, 4-1, 4-11, 4-13, 4-15, 4-16, 5-5, 5-6
three-phase uncontrolled rectifiers, 2-8
transistors, 2-6, 2-7, 2-8, 2-15
troubleshooting, 1-1, 3-11, 4-23, 5-4, 5-5, 5-16

U

unbalanced load, 2-32

V

valve regulated lead acid batteries (VRLA), 2-21
voltage tapping, 2-23

W

walk-in time, 2-5

Z

zero crossing increases, 2-28

The proponent agency of this publication is the Chief of Engineers, United States Army. Users are invited to send comments and suggested improvements on DA Form 2028 (Recommended Changes to Publications and Blank Forms) directly to HQUSACE, (ATTN: CEMP-SP), Washington, DC 20314-1000.

By Order of the Secretary of the Army:

ERIC K. SHINSEKI
General, United States Army
Chief of Staff

Official:

JOEL B. HUDSON
Administrative Assistant to the
Secretary of the Army

Distribution:

To be distributed in accordance with Initial Distribution Number (IDN) 344743, requirements for non-equipment TM 5-693.

PIN: 077447-000