EMERGENCY PROCEDURES

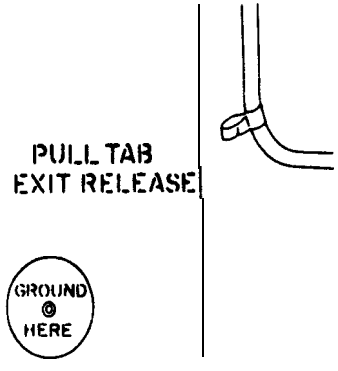

DETAIL A

OUTSIDE CABIN EMERGENCY ESCAPE WINDOW TAB

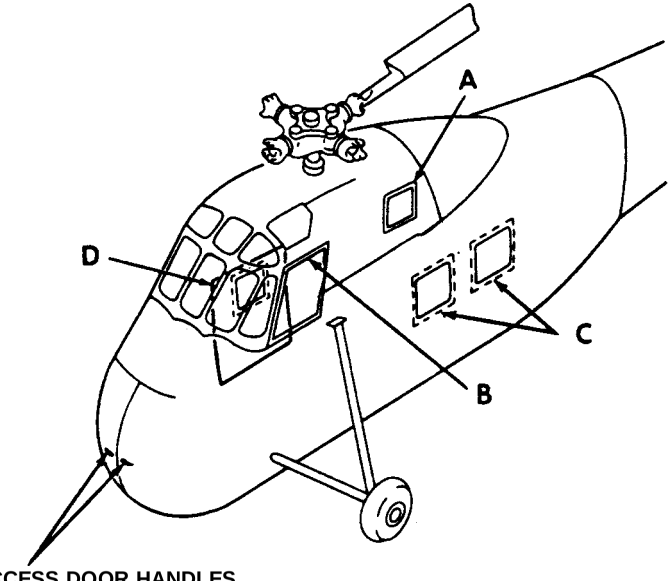

ENGINE ACCESS DOOR HANDLES

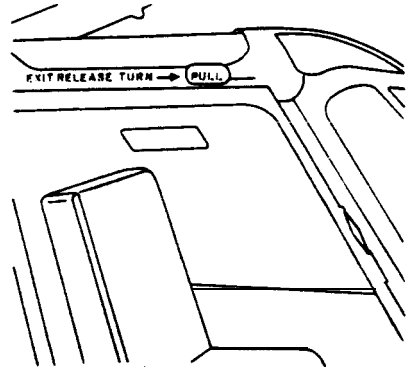

DETAIL B

OUTSIDE PILOT'S COMPARTMENT WINDOW RELEASE HANDLE (TWO PLACES)

CUT FOR EMERGENCY RESCUE

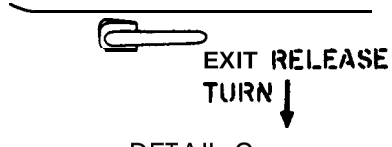

DETAIL C

OUTSIDE CABIN EMERGENCY ESCAPE HATCH RELEASE HANDLES

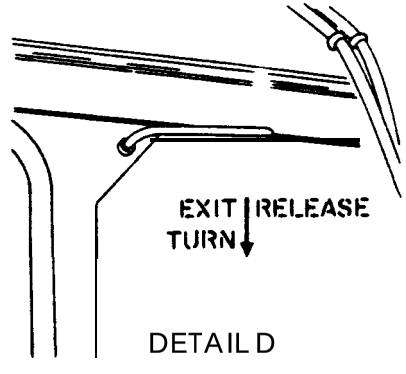

DETAIL D

OUTSIDE CABIN DOOR EMERGENCY RELEASE HANDLE

EMERGENCY ENTRANCE

EMERGENCY ENTRANCE IS GAINED THROUGH CABIN DOOR, PILOT'S COMPARTMENT WINDOWS, ESCAPE HATCHES, AND ESCAPE WINDOW. BROKEN YELLOW LINES SURROUNDING CABIN DOOR WINDOW, AND ESCAPE HATCHES INDICATE WHERE FUSELAGE MAY BE CUT IF DOOR OR ESCAPE HATCHES FAIL TO OPEN.

Figure 5–25. Models CH–34A and CH–34C aircraft—Continued.

GENERAL DESCRIPTION

TYPE – TWIN ENGINE, HELICOPTER
CREW – 2 OR 3
PASSENGERS – 23 (LITTERS-241

DIMENSIONS (MAX) AND WEIGHT (GROSS)

LENGTH – 88 FT, 2.85 IN
WIDTH – 68 FT, 5.75 IN
HEIGHT – 21 FT, 9 IN
WEIGHT – 31,000 LB

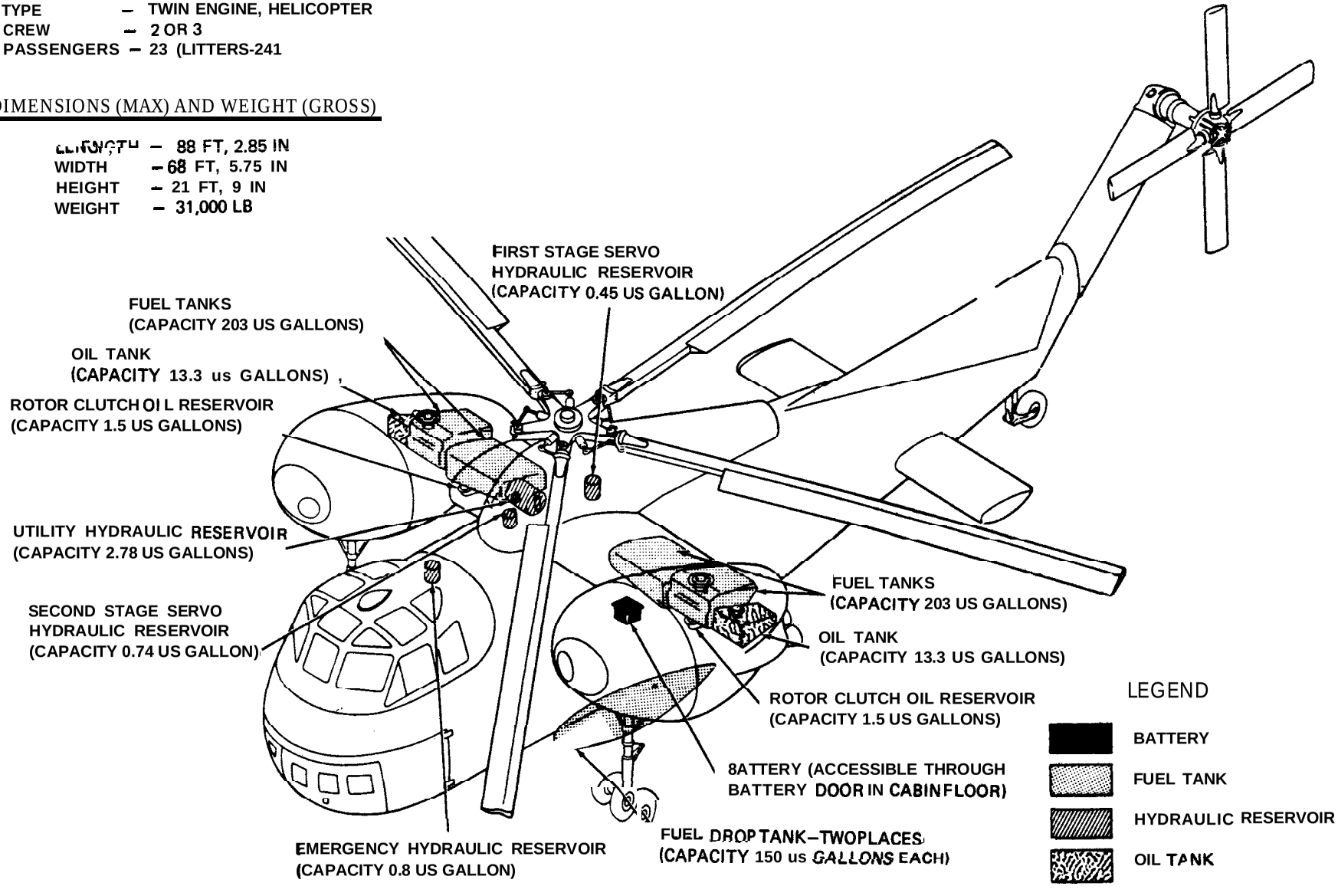

Figure 5-26. Model CH-37B aircraft.

EMERGENCY PROCEDURES

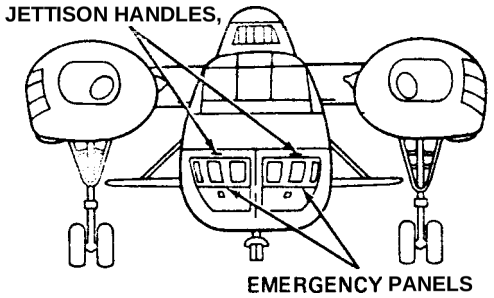

DETAIL C
NOSE DOORS

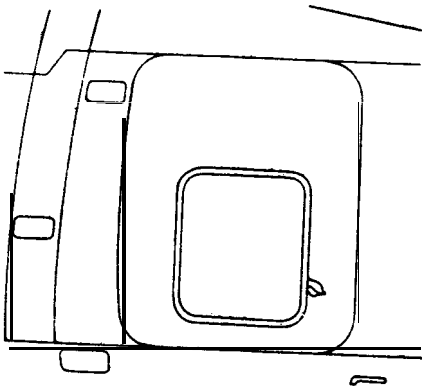

DETAIL B
CABIN EMERGENCY HATCH

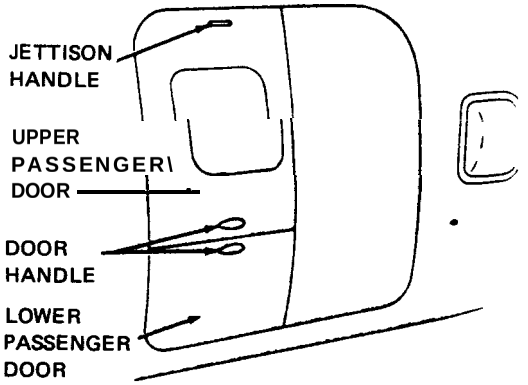

DETAIL A
PASSENGER DOORS

EMERGENCY ENTRANCE

EMERGENCY ENTRANCE IS NORMALLY GAINED THROUGH UPPER AND LOWER PASSENGER DOORS (DETAIL A), LOCATED ON RIGHT-HAND SIDE OF CABIN, BY TURNING DOOR HANDLES. UPPER PASSENGER DOOR MAY BE JETTISONED BY TURNING JETTISON HANDLE, MARKED TURN EXIT RELEASE. EMERGENCY ENTRANCES MAY ALSO BE GAINED THROUGH CABIN EMERGENCY HATCH, NOSE DOOR EMERGENCY PANELS, PILOTS COMPARTMENT WINDOWS, AND FOUR FORWARD CABIN WINDOWS. CABIN EMERGENCY HATCH (DETAIL B) MAY BE JETTISONED BY TURNING JETTISON HANDLE MARKED TURN EXIT RELEASE. HATCH WINDOW PANE MAY BE REMOVED BY PULLING TAB, MARKED PULL TAB EXIT RELEASE. NOSE DOOR EMERGENCY PANELS (DETAIL C) MAY BE JETTISONED BY PULLING JETTISON HANDLE, MARKED RELEASE PULL TO JETTISON. PILOT: COMPARTMENT EMERGENCY PANELS MAY BE JETTISONED BY PULLING DOWN ON JETTISON HANDLE, MARKED PULL DOWN EXIT RELEASE. EACH OF FOUR FORWARD CABIN WINDOW PANES ARE PROVIDED WITH A PULL TAB, MARKED PULL TAB EXIT RELEASE. BROKEN YELLOW LINES SURROUNDING CABIN WINDOWS INDICATE EMERGENCY CUT-IN AREAS.

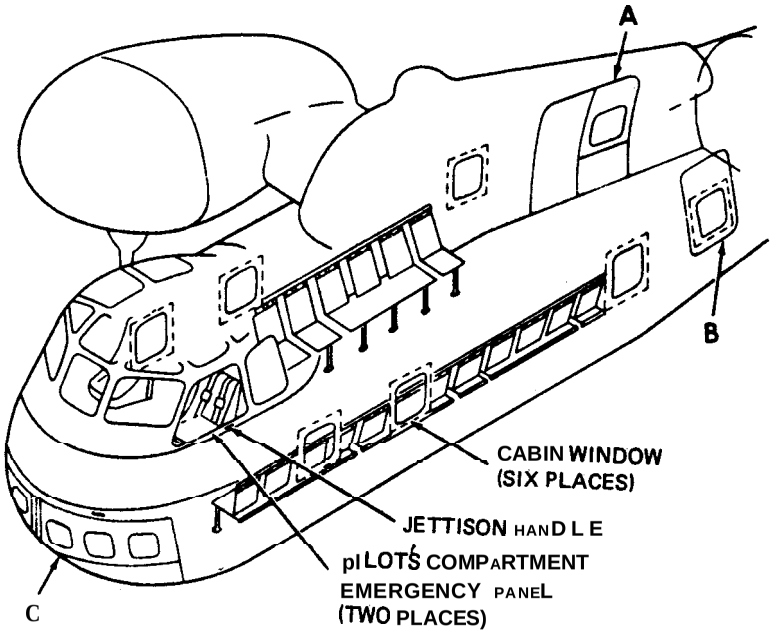

Figure 5-26. Model CH-37B aircraft—Continued.

GENERAL DESCRIPTION

TYPE — TWIN ENGINE, HELICOPTER
CREW - 2
PASSENGERS — 33 (LITTERS-241

DIMENSIONS (MAX) AND WEIGHT (GROSS)

LENGTH — 98 FT, 13/10 IN
WIDTH — 12FT, 5 IN
HEIGHT — 18 FT, 62/5 IN
WEIGHT — 24,500 LB

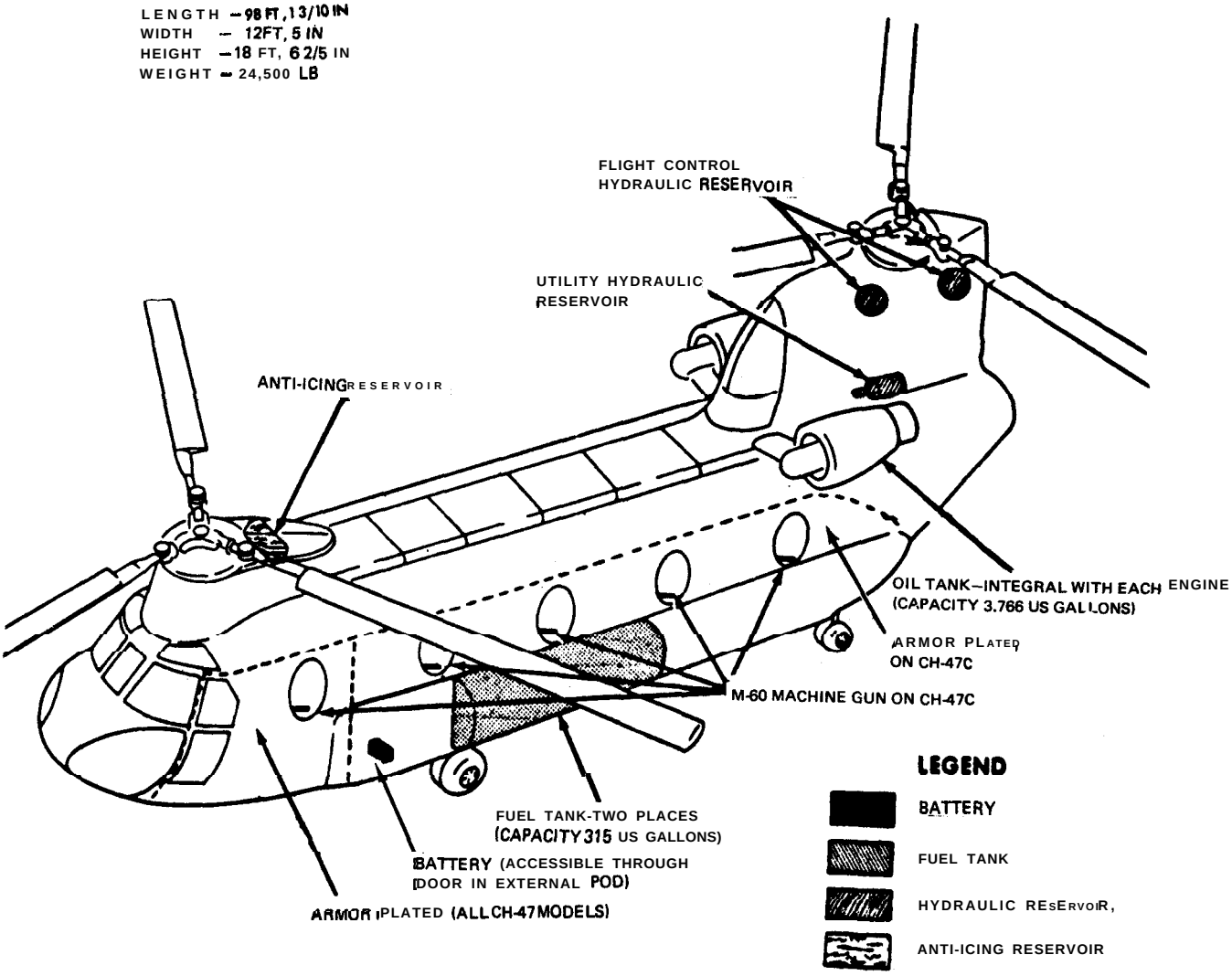

EMERGENCY ENTRANCE

EMERGENCY ENTRANCE IS GAINED THROUGH DOORS. IF DOOR FAILS TO OPEN. BREAK GLASS TO GAIN ACCESS TO DOOR JETTISON HANDLE.

Figure 5-27. *Models CH-47A, CH-47B, and CH-47C aircraft.*

GENERAL DESCRIPTION

TYPE – FREE TURBINE ENGINE, HELICOPTER
CREW – 2 (3 ADDITIONAL SEATS)
USE – TRANSPORTATION OF EQUIPMENT, CARGO (15,541 LB), AND AIR-TO-SURFACE TOWING

DIMENSIONS (MAX) AND WEIGHT (GROSS)

LENGTH – 85 FT, 5 IN (ROTOR BLADES ROTATING-88 FT, 6 IN)
WIDTH – COCKPIT-7 FT, 1 IN; FUSELAGE-6 FT, 8 IN; MAIN ROTOR BLADES-72 FT
HEIGHT – TOP OF TAIL ROTOR-25 FT, 7.4 IN; TOP OF ROTOR-18 FT, 7 IN
WEIGHT – 38,000 LB

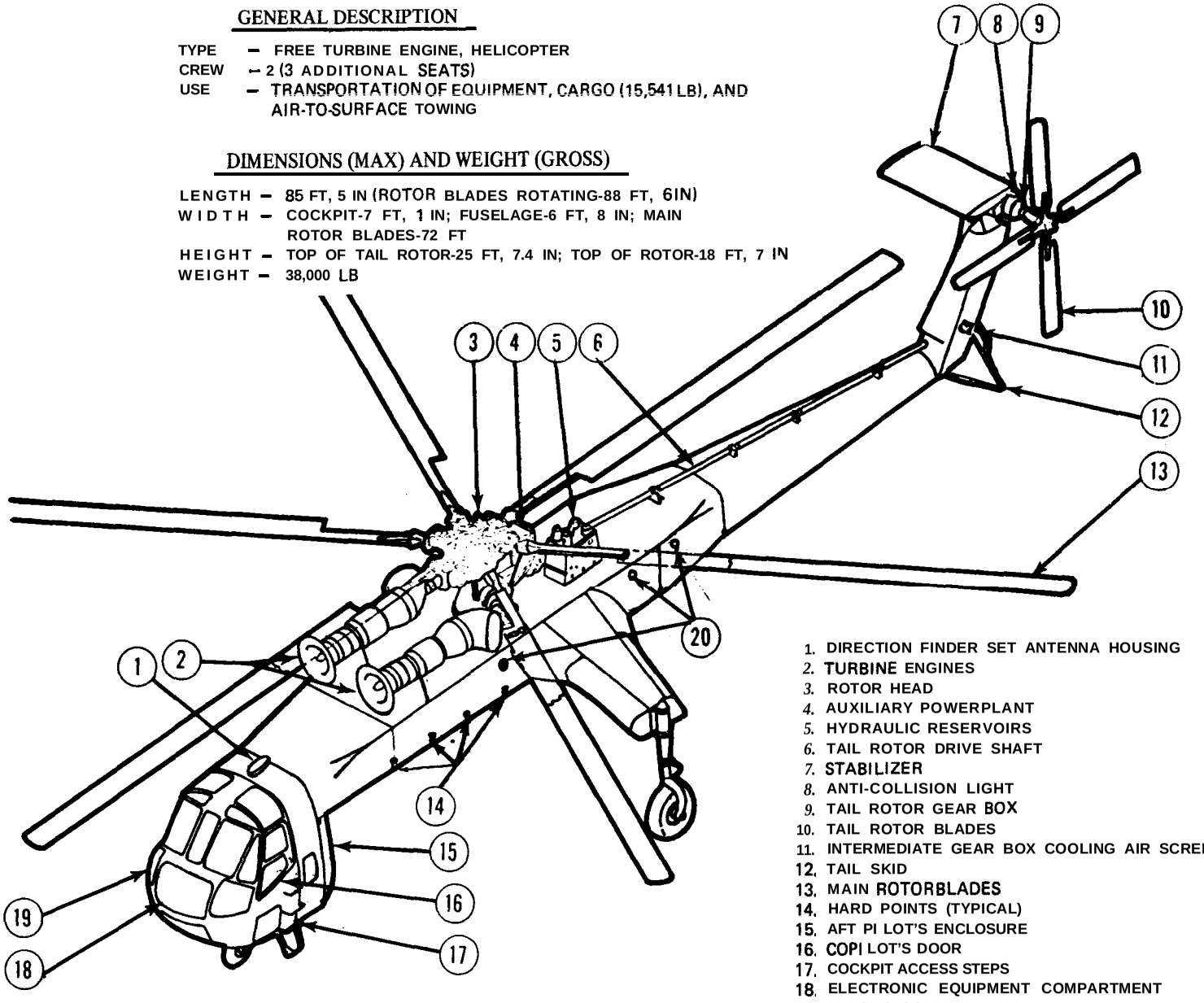

1. DIRECTION FINDER SET ANTENNA HOUSING
2. TURBINE ENGINES
3. ROTOR HEAD
4. AUXILIARY POWERPLANT
5. HYDRAULIC RESERVOIRS
6. TAIL ROTOR DRIVE SHAFT
7. STABILIZER
8. ANTI-COLLISION LIGHT
9. TAIL ROTOR GEAR BOX
10. TAIL ROTOR BLADES
11. INTERMEDIATE GEAR BOX COOLING AIR SCREEN
12. TAIL SKID
13. MAIN ROTORBLADES
14. HARD POINTS (TYPICAL)
15. AFT PI LOT'S ENCLOSURE
16. COPI LOT'S DOOR
17. COCKPIT ACCESS STEPS
18. ELECTRONIC EQUIPMENT COMPARTMENT
19. PI LOT'S COMPARTMENT
20. FUEL (1350 GALLONS)

Figure 5–28. Model CH–54 aircraft.

EMERGENCY PROCEDURES

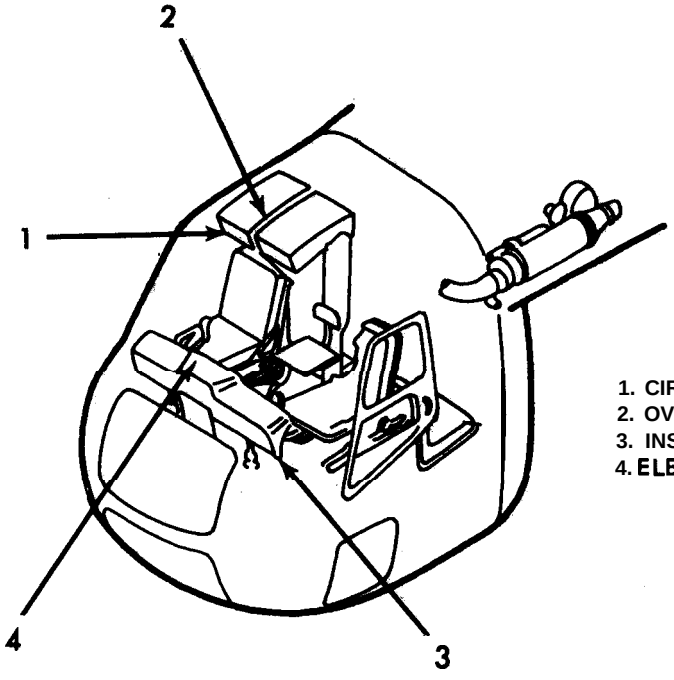

1. CIRCUIT BREAKER PANEL
2. OVERHEAD CONTROL PANEL
3. INSTRUMENT PANEL
4. ELECTRONICS COMPARTMENT

EMERGENCY ENTRANCE

THE WINDSHIELD OR WINDOWS MAY BE BROKEN IF ENTRANCE TO THE CABIN CANNOT BE GAINED THROUGH ANY OF THE ACCESS DOORS.

Figure 5-28. *Model CH-54 aircraft*—Continued.

GENERAL DESCRIPTION

TYPE – SINGLE ENGINE, HELICOPTER
CREW – 1 OR 2
PASSENGERS – 7 (LITTERS–2) (UH-1B)

DIMENSIONS (MAX) AND WEIGHT (GROSS)

LENGTH – 52 FT, 10.24 IN (MODEL UH-1A)
– 52 FT, 10.84 IN (MODEL UH-1B)
WIDTH – 43 FT, 9 IN (MODEL UH-1A)
– 44 FT, (MODEL UH-1B)
HEIGHT – 11 FT, 4.57 IN (MODEL UH–1A)
– 13 FT, 2.02 IN (MODEL UH-1B)
WEIGHT – 5600 TO 7200 LB (UH-1A)
– 6600 TO 8600 LB (UH-1B)

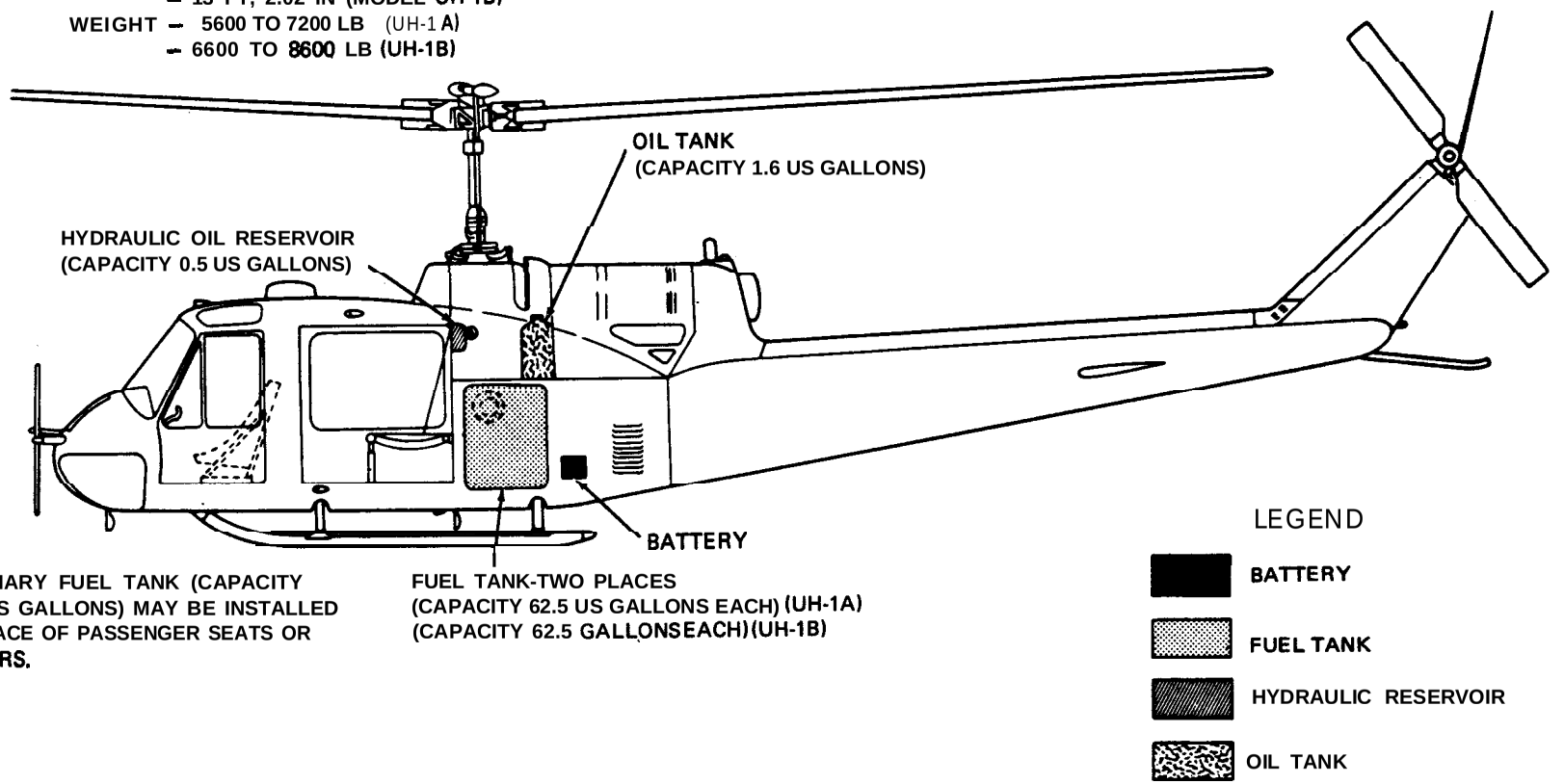

Figure 5–29. Models UH–1A and UH–1B aircraft.

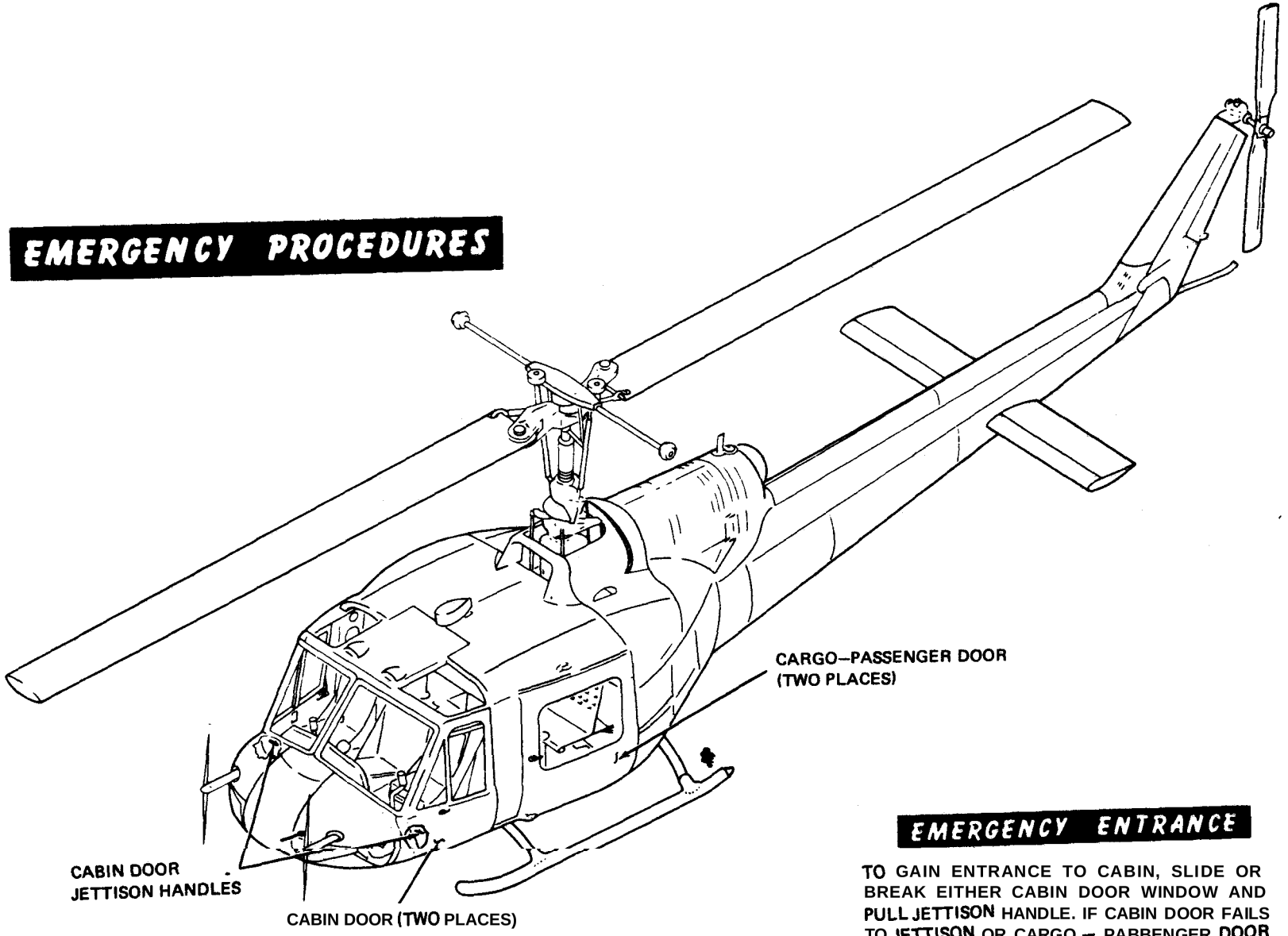

EMERGENCY ENTRANCE

TO GAIN ENTRANCE TO CABIN, SLIDE OR BREAK EITHER CABIN DOOR WINDOW AND PULL JETTISON HANDLE. IF CABIN DOOR FAILS TO JETTISON OR CARGO – PABBENGER DOOR FAILS TO OPEN, BREAK WINDOWS OR WINDSHIELD.

Figure 5-29. Models UH-1A and UH-1B aircraft—Continued.

GENERAL DESCRIPTION

TYPE — SINGLE TURBINE ENGINE, HELICOPTER
CREW - 3
PASSENGERS — 10

DIMENSIONS (MAX) AND WEIGHT (GROSS)

LENGTH — 57 FT, 1 IN
WIDTH — 8 FT, 4 IN
HEIGHT — 12 FT, 6 IN
WEIGHT — 9500 LB

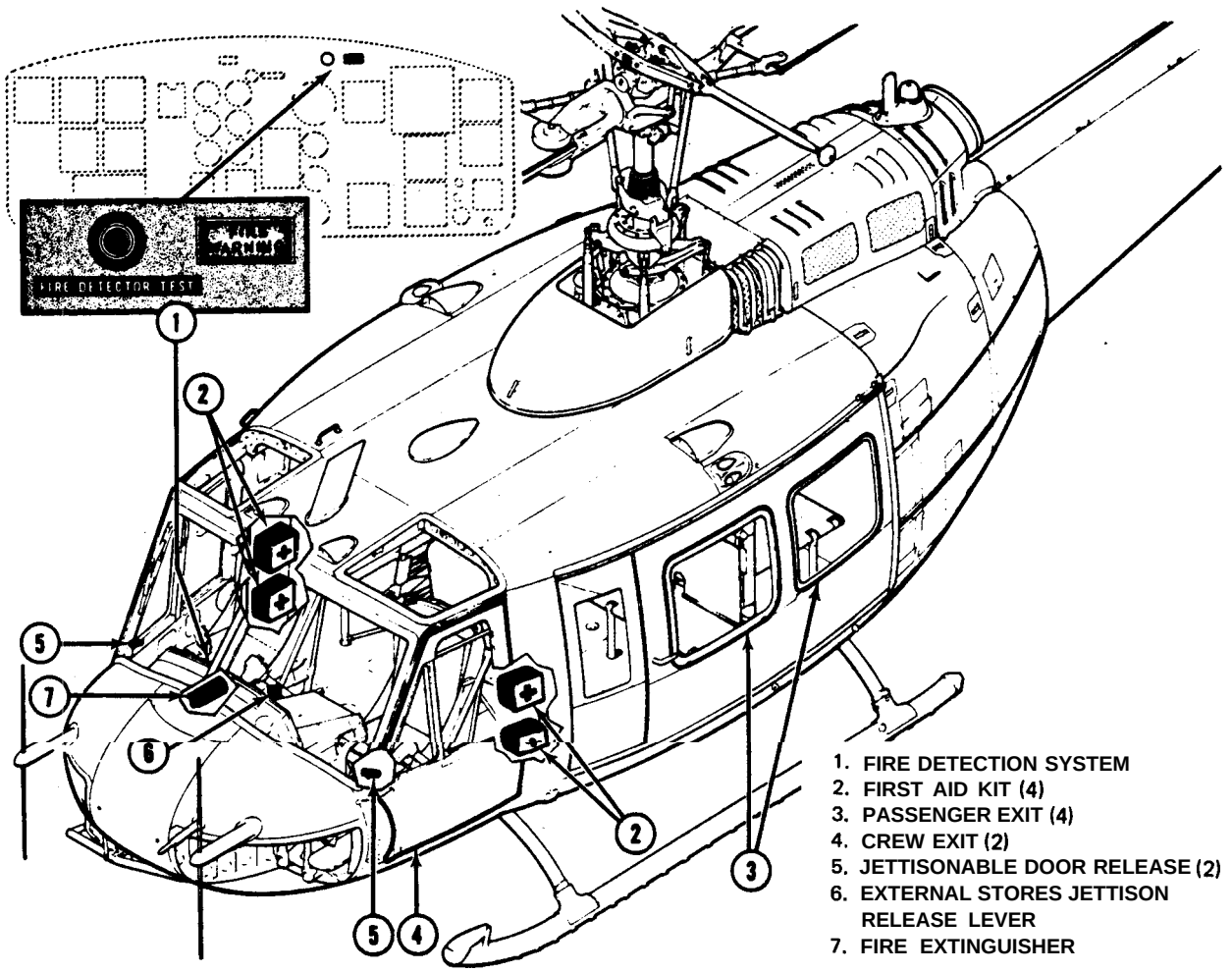

1. FIRE DETECTION SYSTEM
2. FIRST AID KIT (4)
3. PASSENGER EXIT (4)
4. CREW EXIT (2)
5. JETTISONABLE DOOR RELEASE (2)
6. EXTERNAL STORES JETTISON RELEASE LEVER
7. FIRE EXTINGUISHER

EMERGENCY ENTRANCE

TO GAIN ENTRANCE TO THE CABIN IN THE EVENT OF AN EMERGENCY, SLIDE OPEN OR BREAK THE PILOT'S OR CO-PILOT'S SLIDE WINDOW AND REACH FORWARD AND PULL THE JETTISONABLE DOOR RELEASE. IF DOOR WILL NOT JETTISON OR CARGO DOOR WILL NOT OPEN, BREAK DOOR WINDOWS OR WINDSHIELD TO GAIN ENTRANCE.

Figure 5-30. Models UH-1D and UH-1H aircraft.

GENERAL DESCRIPTION

TYPE – SINGLE ENGINE, HELICOPTER
CREW – 2
PASSENGERS – 0

DIMENSIONS (MAX) AND WEIGHT (GROSS)

LENGTH – 52 FT, 11 65/100 IN
WIDTH – 10 FT, 4 IN
HEIGHT – 11 FT, 7 IN
WEIGHT – 9500 LB

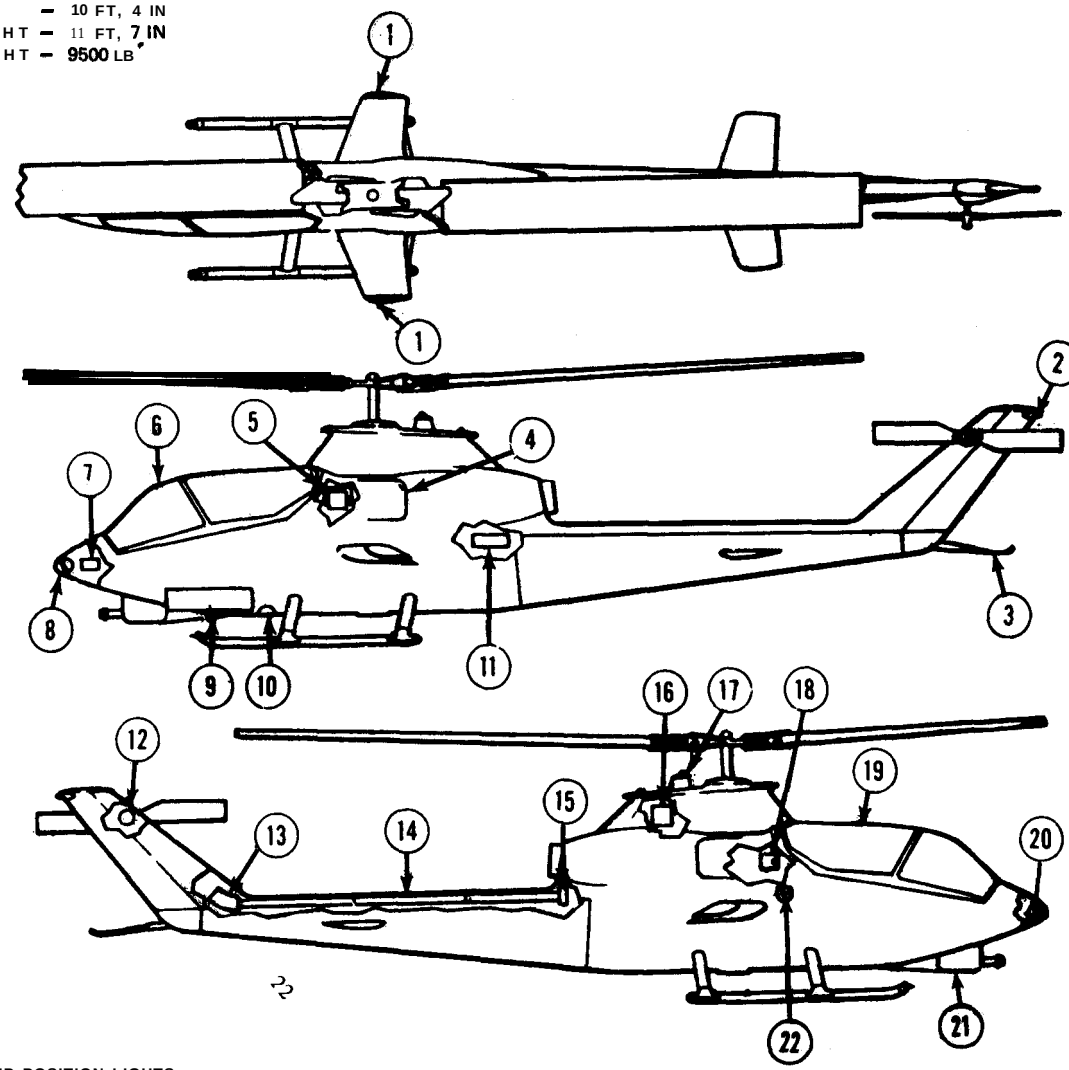

1. WING TIP POSITION LIGHTS
2. AFT POSITION LIGHT
3. TAIL SKID
4. ENGINE AIR INLET
5. HYDRAULIC RESERVOIR
6. GUNNER'S CANOPY HATCH
7. BATTERY
8. LEFT LANDING LIGHT
9. AMMUNITION COMPARTMENT
10. SEARCHLIGHT
11. ENGINE AND TRANSMISSION OIL COOLER
12. 90 DEGREES GEAR BOX
13. 42 DEGREES GEAR BOX
14. TAIL ROTOR DRIVE SHAFT
15. TRANSMISSION COMPARTMENT AND OIL COOLER BLOWER
16. ENGINE OIL TANK (3.4 GALLONS)
17. ANTI-COLLISION LIGHT
18. HYDRAULIC RESERVOIR-2 (3.2 PINTS EACH)
19. PILOT'S CANOPY HATCH
20. RIGHT LANDING LIGHT
21. TAT-102A OR XM-28 TURRET
22. FUEL FILLER CAP (TANK CAPACITY-265 GALLONS)

Figure 5-31. Model AH-1G aircraft

EMERGENCY PROCEDURES

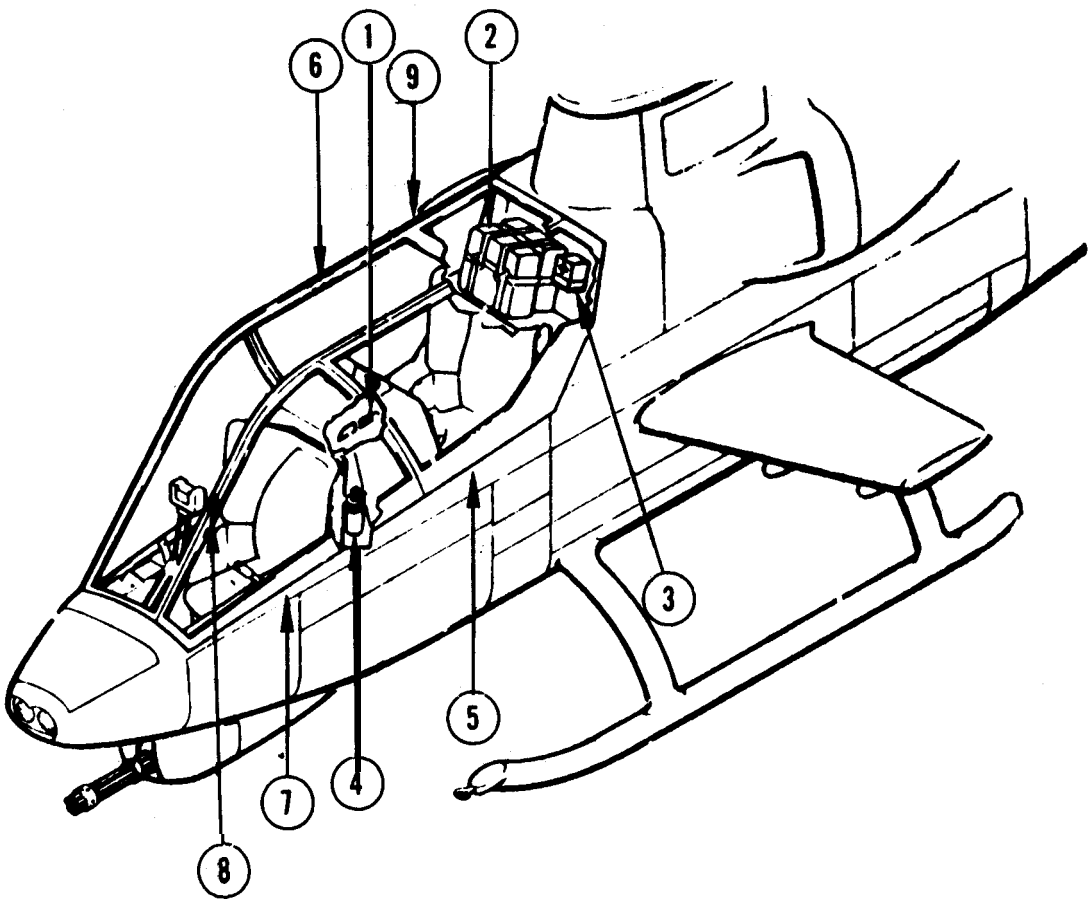

1. KNIFE — CANOPY BREAKOUT
2. SURVIVAL KITS STOWAGE (PROVISIONS)
3. FIRST AID KIT
4. FIRE EXTINGUISHER
5. PI LOT'S CANOPY DOOR
6. CANOPY JETTISONABLE RELEASE (PILOT'S)
7. GUNNER'S CANOPY DOOR
8. CANOPY JETTISONABLE RELEASE (GUNNER'S)
9. CANOPY AREA

EMERGENCY ENTRANCE

WINDOWS AND WINDSHIELDS MAY BE BROKEN IF ENTRANCE TO THE CABIN THROUGH THE DOORS IS NOT POSSIBLE.

Figure 5-31. Model AH-1 G aircraft—Continued.

GENERAL DESCRIPTION

TYPE -- SINGLE ENGINE, HELICOPTER, PRIMARY TRAINER
CREW - 1
PASSENGERS - 1

DIMENSIONS (MAX) AND WEIGHT (GROSS)

LENGTH - 28 FT, 10 3/4 IN
WIDTH - 25 FT, 3 1/2 IN
HEIGHT - 8 FT, 2 5/8 IN
WEIGHT - 1670 LB

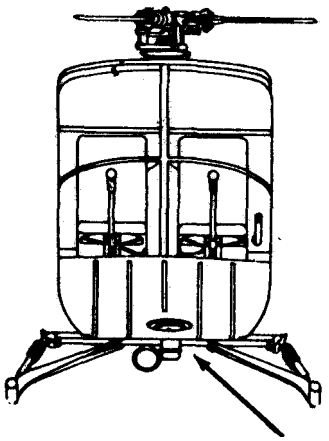

EXTERIOR BATTERY -SECURED TO RIGHT AFT FUSELAGE STRUT

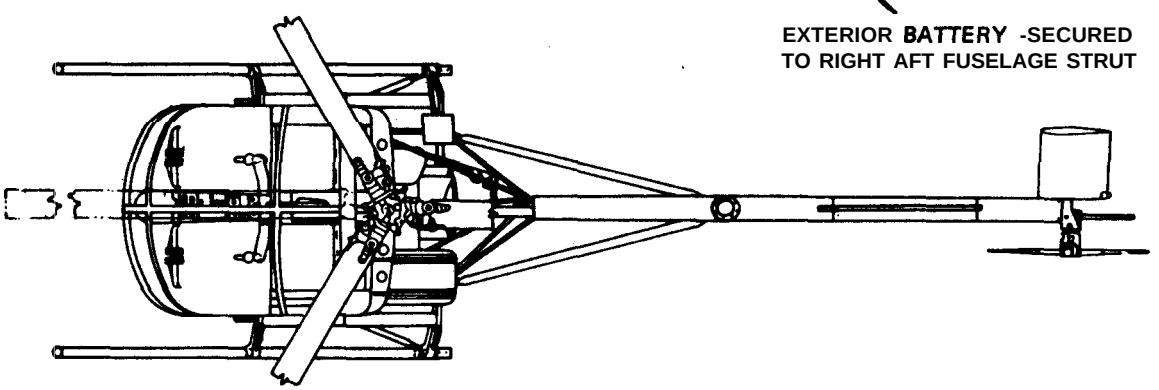

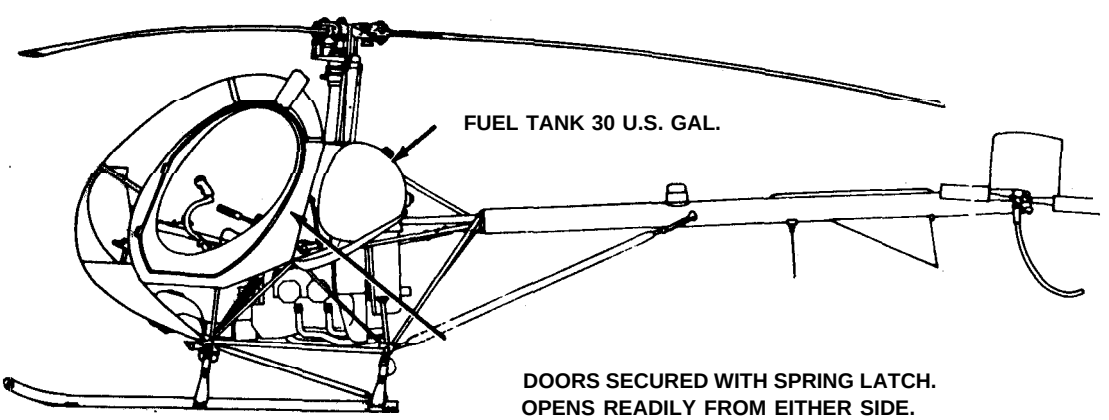

EMERGENCY ENTRANCE

WINDOWS AND WINDSHIELD MAY SE BROKEN IF ENTRANCE TO THE CABIN THROUGH THE DOOR IS NOT POSSIBLE.

Figure 5-32. Model TH-55 aircraft.

GENERAL DESCRIPTION

TYPE – SINGLE ENGINE, LIAISON
CREW – 1
PASSENGERS – 1

DIMENSIONS AND WEIGHT (GROSS)

LENGTH – 25 FT, 9.5 IN
WING SPAN – 36 FT
HEIGHT – 7 FT, 6 IN
WEIGHT – 2100 LB (MODEL 0-1A)
– 2166 LB (MODEL 0-1E)
– 2400 LB (MODEL T0-1D)

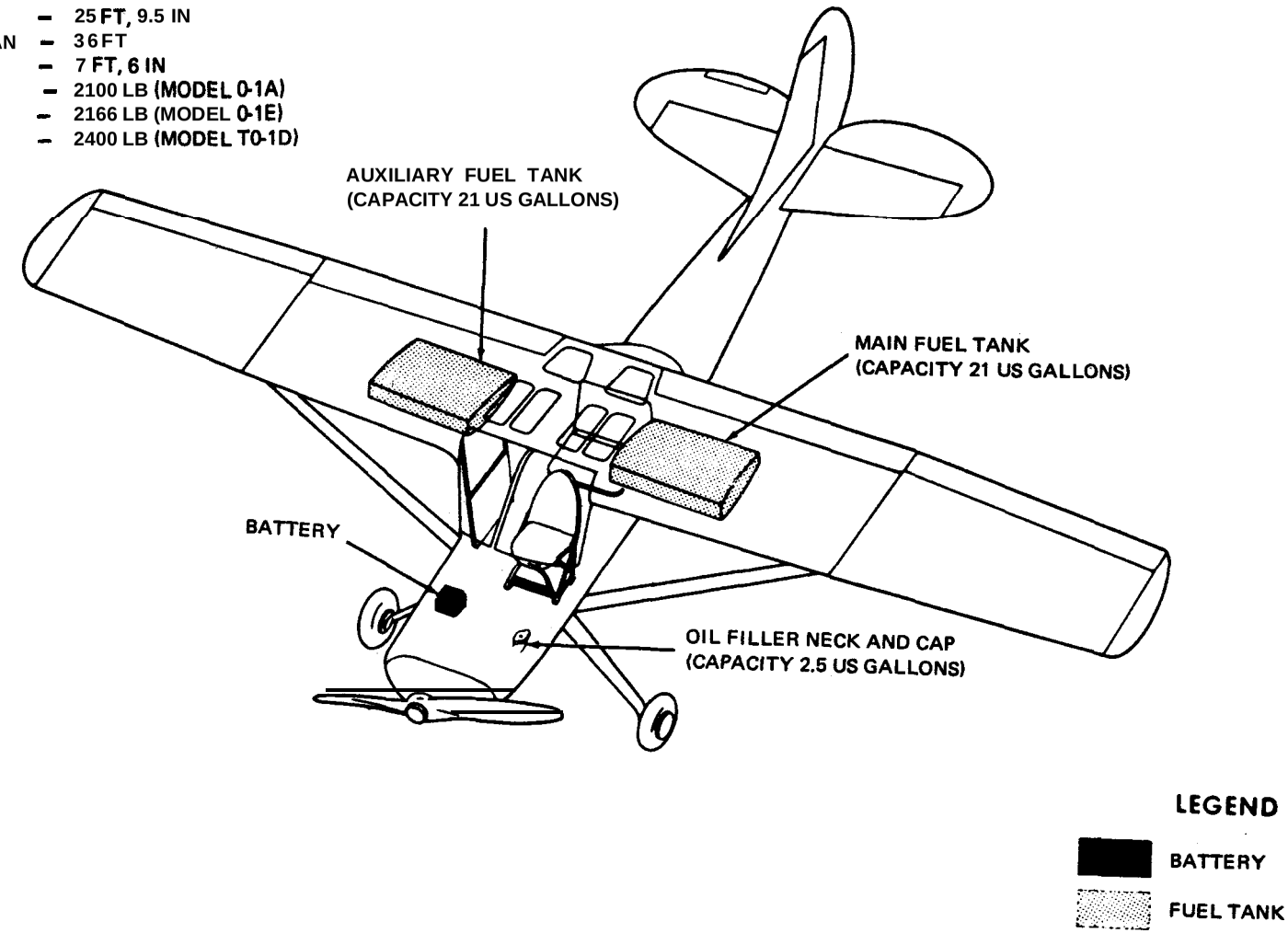

Figure 5–33. Models 0–1A, 0–1E, 0–1F, TO–1A, TO–1D, TO–1E aircraft.

EMERGENCY PROCEDURES

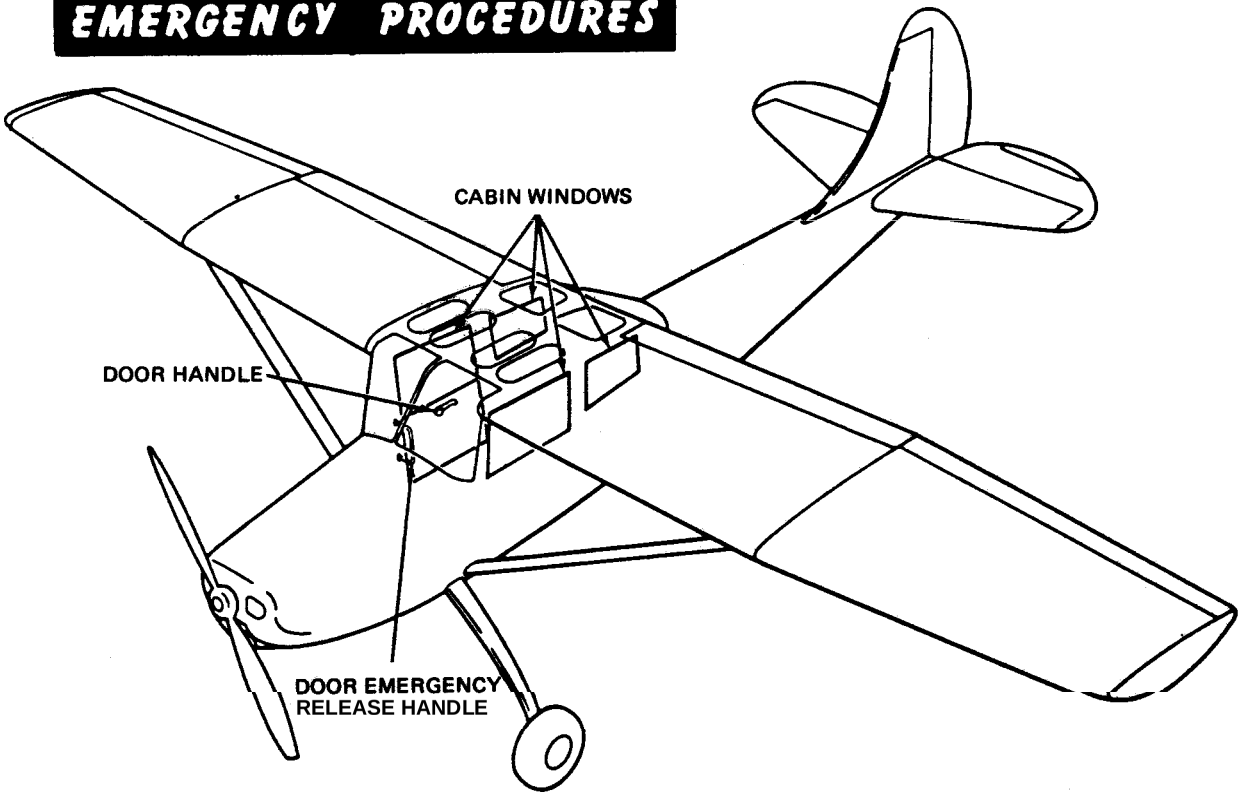

EMERGENCY ENTRANCE

EMERGENCY ENTRANCE. MAY **BE** ACCOMPLISHED BY TURNING DOOR HANDLE TO RELEASE DOOR AND **WINDOW.** IF DOOR CANNOT BE OPENED, BREAK CABIN WINDOWS, AFTER ENTRANCE IS ACCOMPLISHED, **DOOR** MAY BE **JETTISONED** BY **DISENGAGING** LOWER END OF DOOR EMERGENCY RELEASE HANDLE, TURNING IT CLOCKWISE, AND PUSHING **OUTWARD** ON DOOR.

Figure 5-33. Models 0-1 A, O-1 E, O-1 F, TO-1 A, TO-1 D, TO-1 E aircraft--Continued.

GENERAL DESCRIPTION

TYPE – SINGLE ENGINE, PRIMARY TRAINER
CREW – 1
PASSENGERS – 3

DIMENSIONS (MAX) AND WEIGHT (GROSS)

LENGTH – 26 FT, 5 IN
WING SPAN – 36 FT, 2 IN
HEIGHT – 8 FT, 11 IN
WEIGHT – 2500 LB

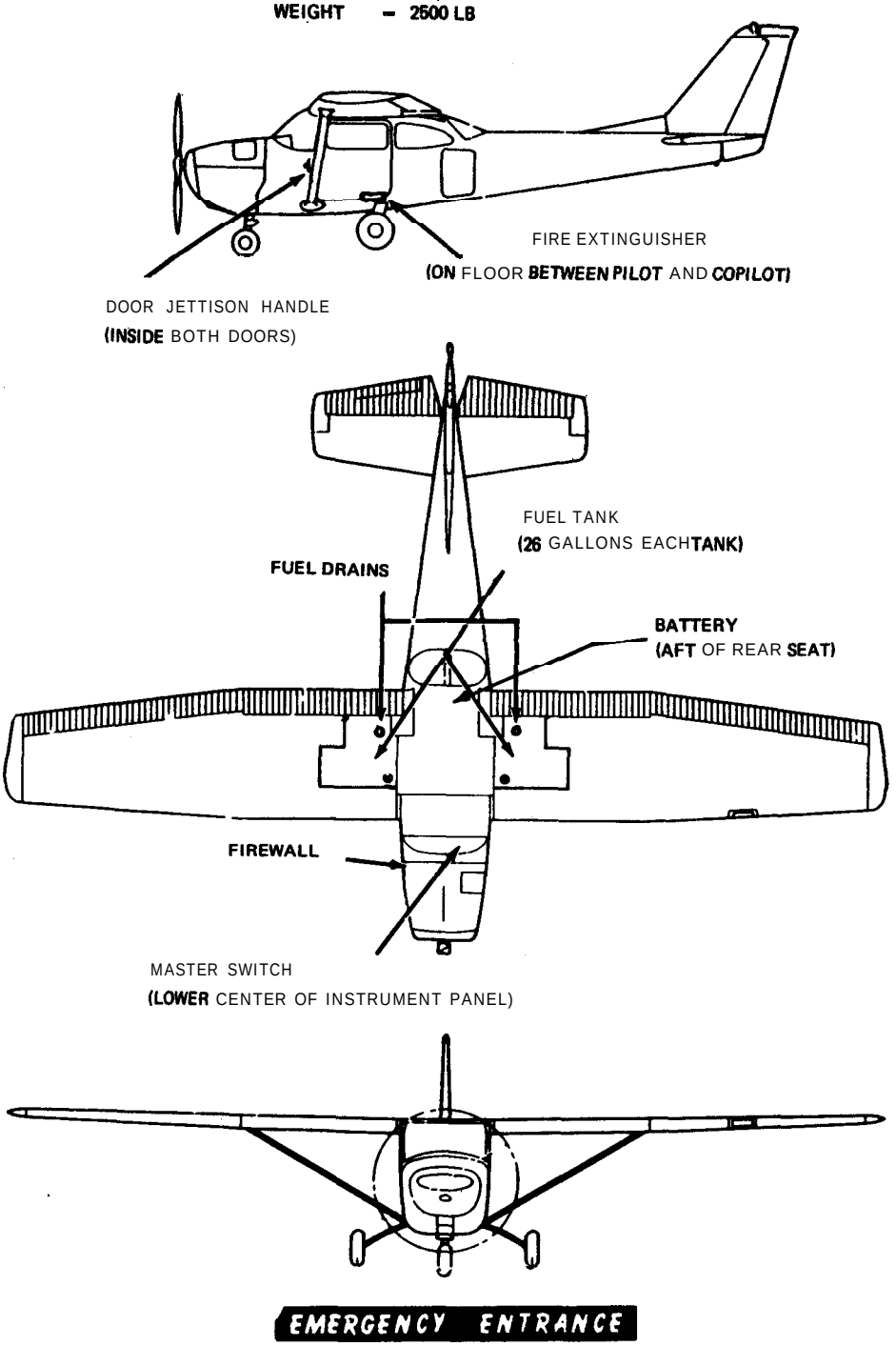

EMERGENCY ENTRANCE

WINDSHIELD OR WINDOWS MAY BE BROKEN IF ENTRANCE THROUGH THE DOOR IS NOT POSSIBLE.

Figure 5-34. Model T-41B aircraft.

GENERAL DESCRIPTION

TYPE – TWIN ENGINE, INSTRUMENT TRAINER
CREW – 1
PASSENGERS – 3

DIMENSIONS (MAX) AND WEIGHT (GROSS)

LENGTH – 27 FT, 3 IN
WING SPAN – 37 FT, 10 IN
HEIGHT – 9 FT, 7 IN
WEIGHT – 3480 L8

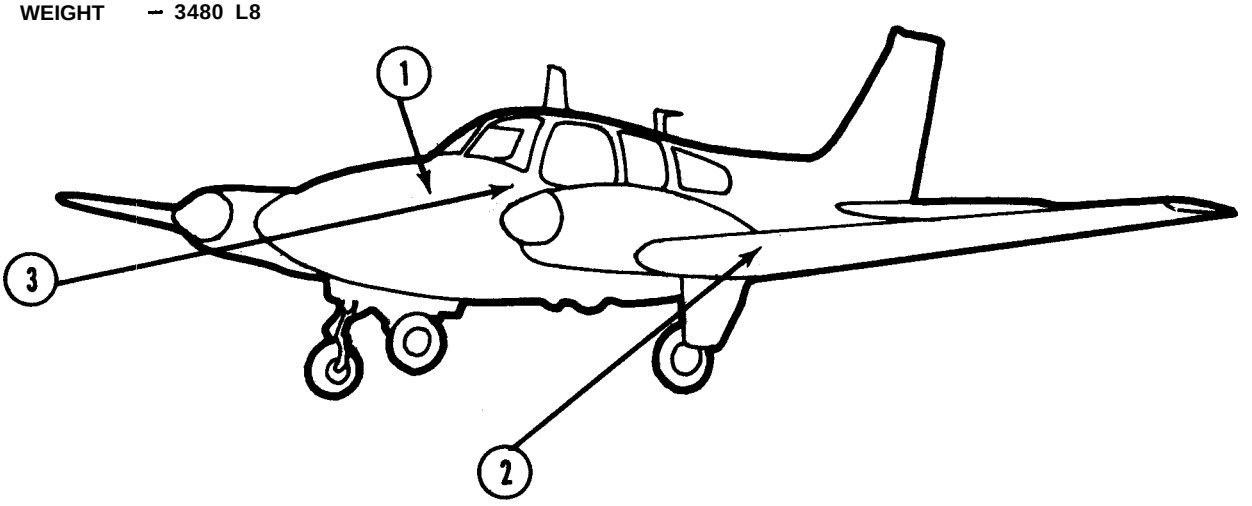

1. MAIN FUEL TANK (142 GALLONS)
2. AUXILLARY FUEL TANK
3. IGNITION SWITCH (EXTREME LEFT OF INSTRUMENT PANEL)

EMERGENCY ENTRANCE

THE WINDSHIELD OR WINDOWS MAY 8E BROKEN IF ENTRANCE TO THE CABIN CANNOT 8E GAINED THROUGH THE DOOR.

Figure 5-35. Model T-42A aircraft.

GENERAL DESCRIPTION

TYPE – SINGLE ENGINE, LIAISON
CREW – 1
PASSENGERS – 5 (LITTERS–2)

DIMENSIONS AND WEIGHT (GROSS)

LENGTH – 30 FT, 5 IN
WINGSPAN – 4BFT
HEIGHT – 10 FT, 51N
WEIGHT – 5100 LB

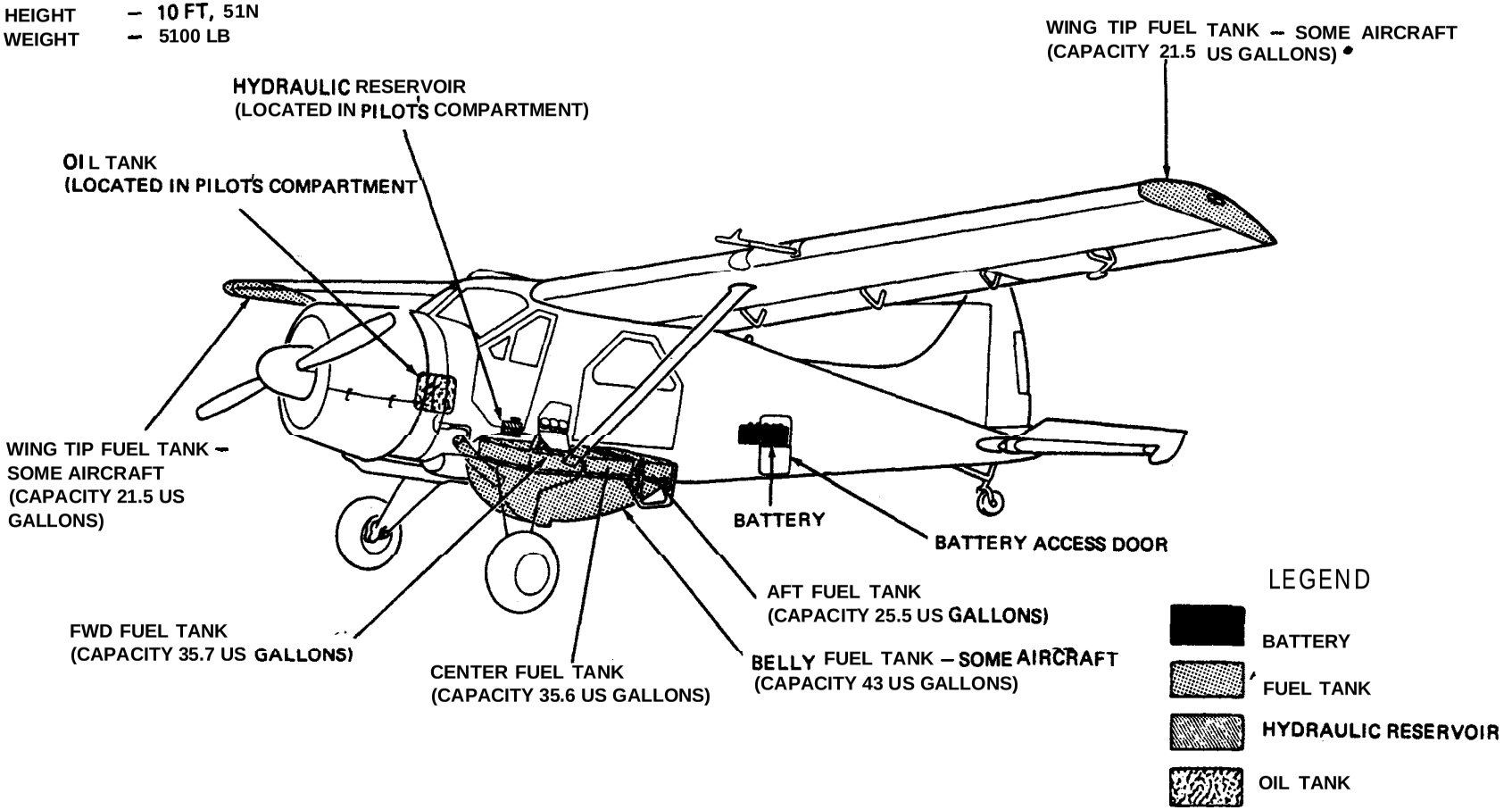

Figure 5–36. Model U–69 aircraft.

EMERGENCY PROCEDURES

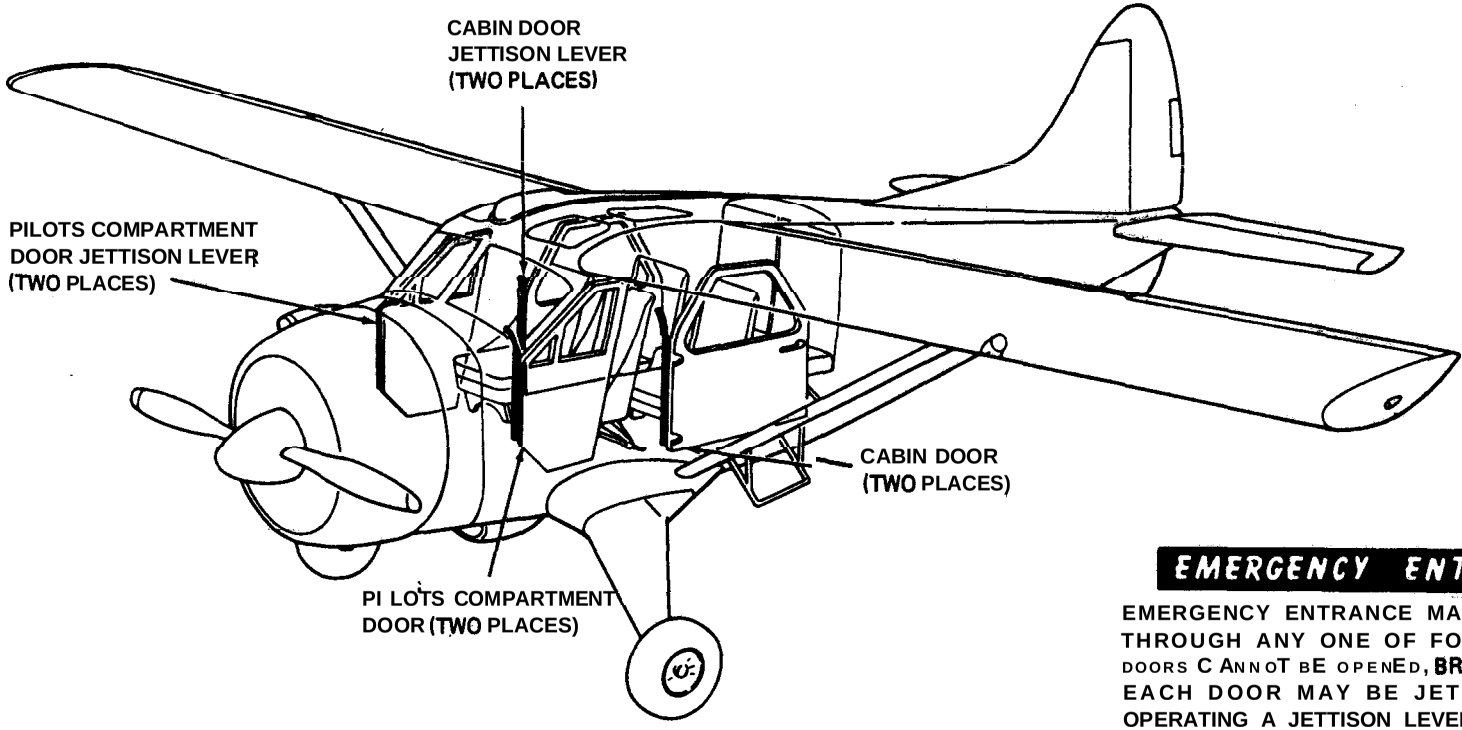

EMERGENCY ENTRANCE

EMERGENCY ENTRANCE MAY BE GAINED THROUGH ANY ONE OF FOUR DOORS. IF DOORS CANNOT BE OPENED, BREAK WINDOWS. EACH DOOR MAY BE JETTISONED BY OPERATING A JETTISON LEVER, LOCATED AT HINGE SIDE OF DOOR. TO OPERATE PILOTS COMPARTMENT DOOR JETTISON LEVER, PULL AFT ON LEVER AND PUSH OUTWARD ON DOOR. TO OPERATE CABIN DOOR JETTISON LEVER, PULL LEVER AFT OR PUSH FORWARD, BEFORE PUSHING DOOR OUTWARD.

Figure 5-36. Model U-6A aircraft-Continued.

GENERAL DESCRIPTION

TYPE — TWIN ENGINE, LIAISON
CREW - 1
PASSENGERS — 5

DIMENSIONS AND WEIGHT (GROSS)

LENGTH — 31 FT, 6 IN
WING SPAN — 45 FT, 3.6 IN
HEIGHT — 11 FT, 6 IN
WEIGHT — 7000 LB

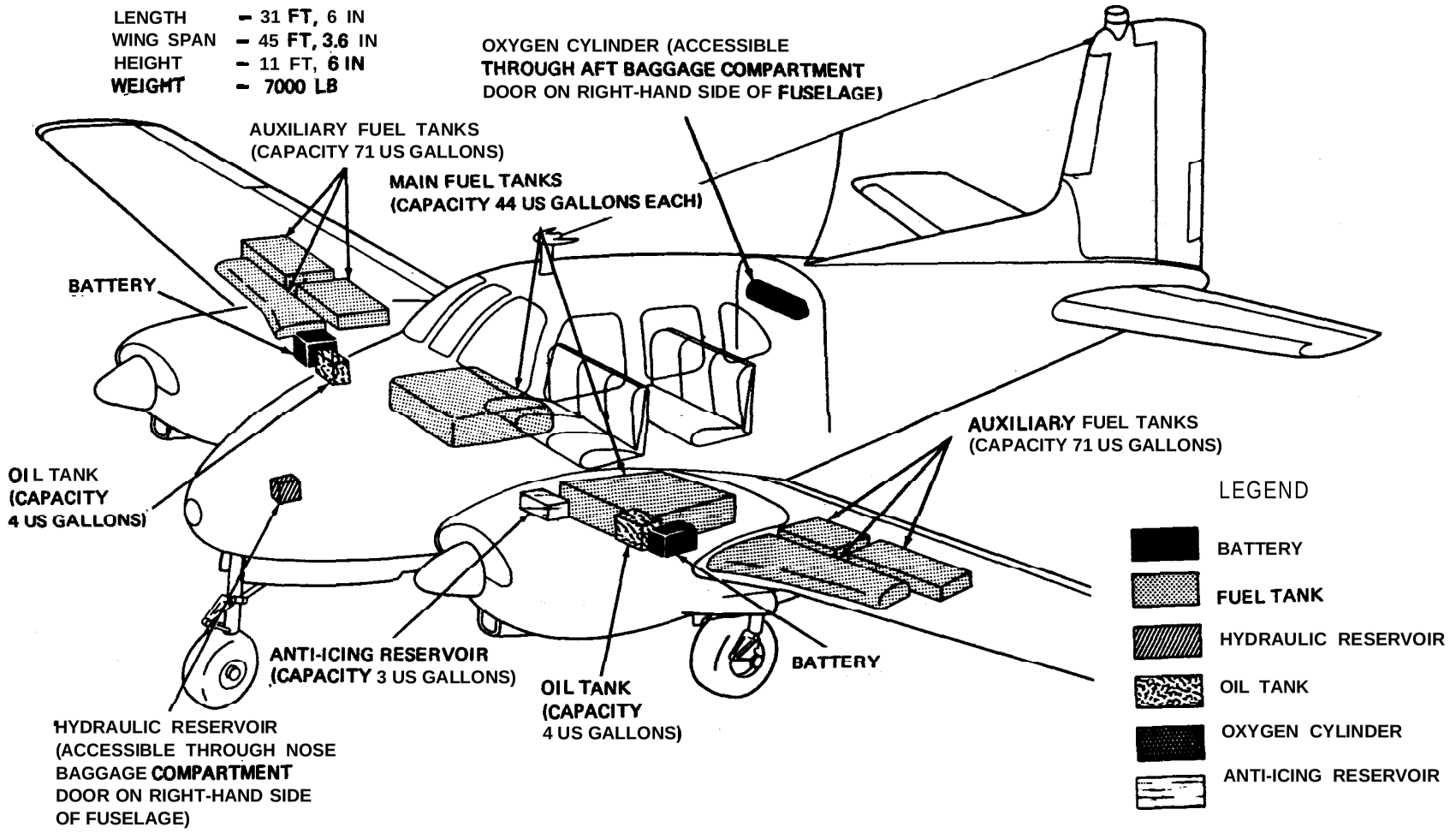

Figure 5-37. *Models U-8D and RU-8D aircraft.*

EMERGENCY PROCEDURES

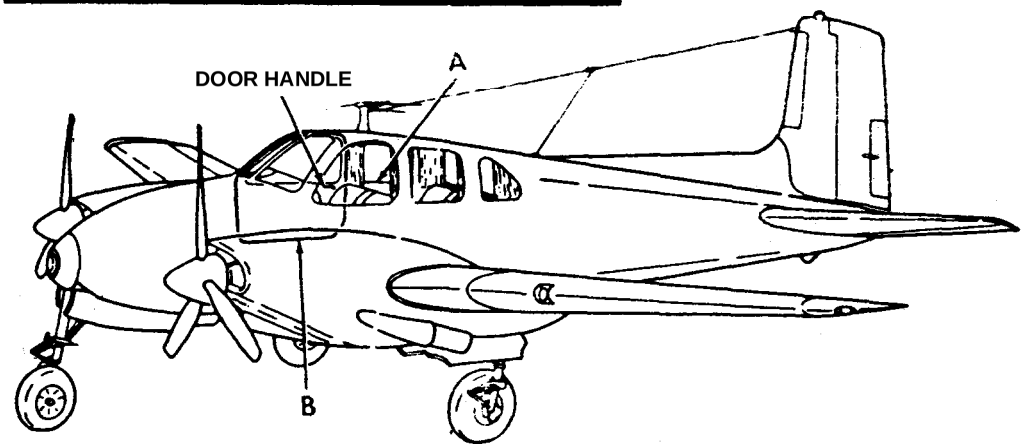

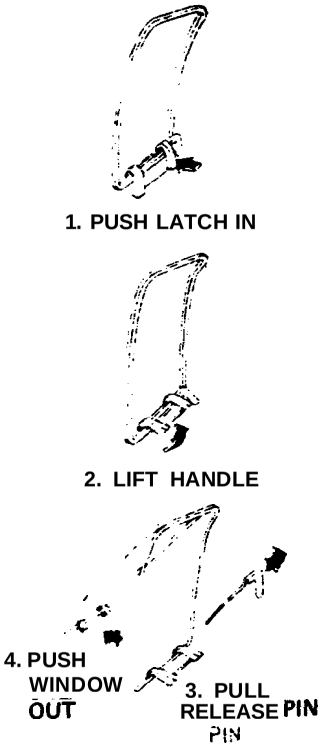

DETAIL A

WINDOW RELEASE

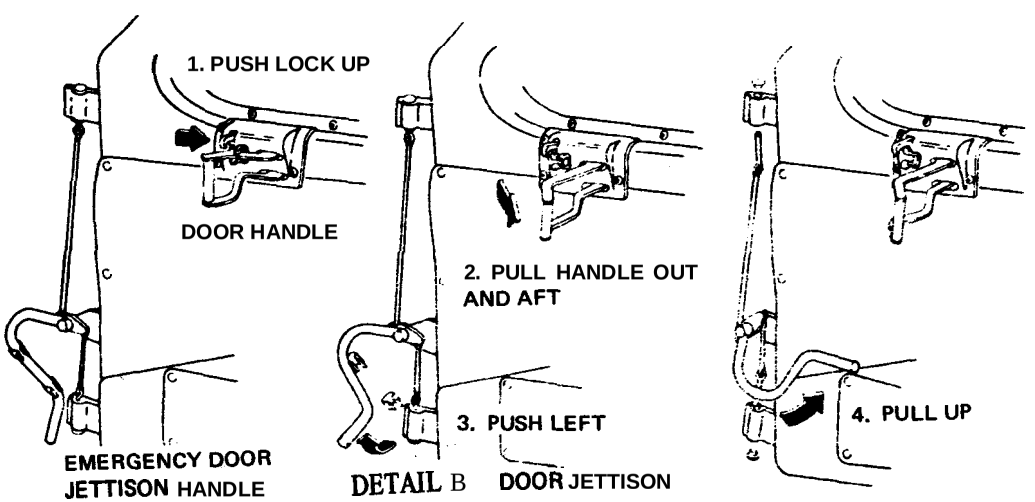

DETAIL B DOOR JETTISON

EMERGENCY ENTRANCE

EMERGENCY ENTRANCE IS GAINED THROUGH DOOR DN RIGHT-HAND SIDE OF CABIN. DOOR IS OPENED BY TURNING DOOR HANDLE. IF DOOR FAILS TO OPEN, CENTER WINDOW MAY BE BROKEN TO GAIN ACCESS TO WINDOW RELEASE PINS. (SEE DETAIL A.) AFTER ENTRANCE IS ACCOMPLISHED, DOOR MAY BE JETTISONED. (SEE DETAIL B.) BROKEN YELLOW LINES SURROUNDING RIGHT-HAND AFT WINDOW INDICATE WHERE FUSELAGE MAY BE CUT IF DOOR OR WINDOWS FAIL TO OPEN.

Figure 5–37. Models U–8D and RU–8D aircraft-continued.