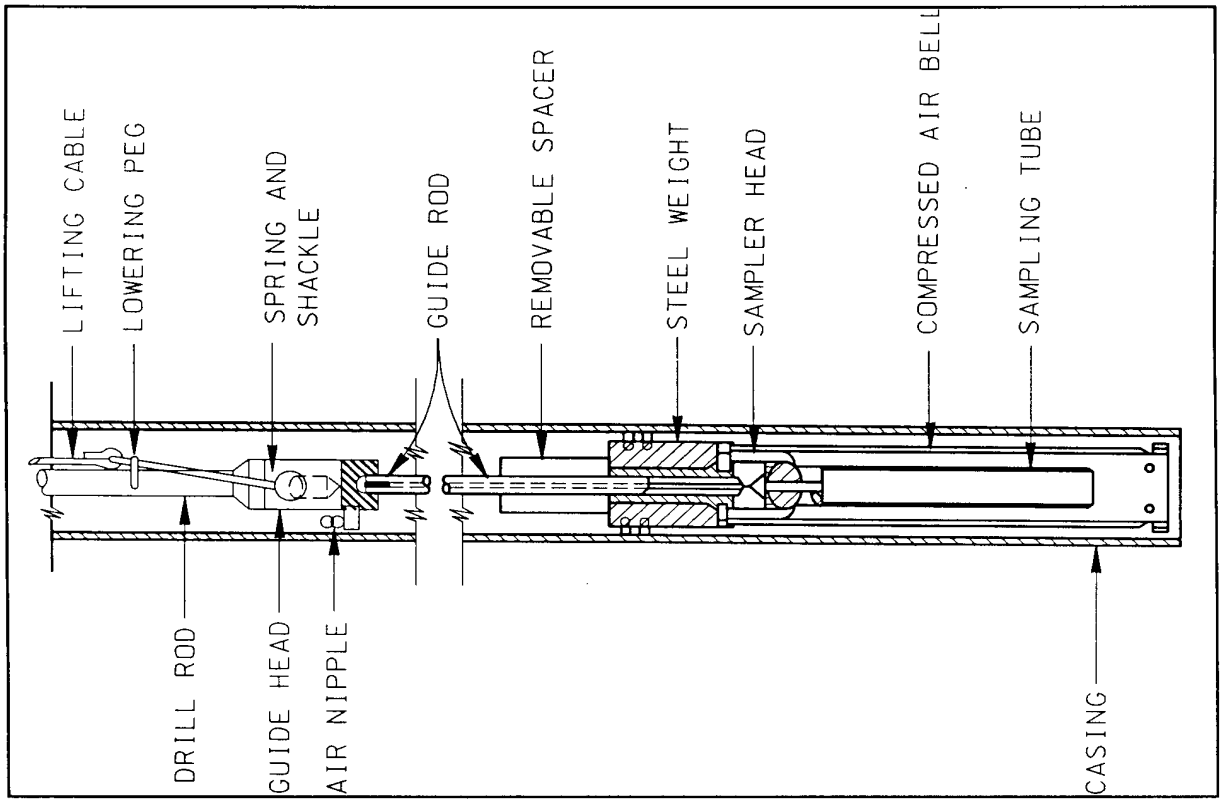

Figure 5-18. Schematic drawing of the Bishop sand sampler (after Hvorslev 1949)

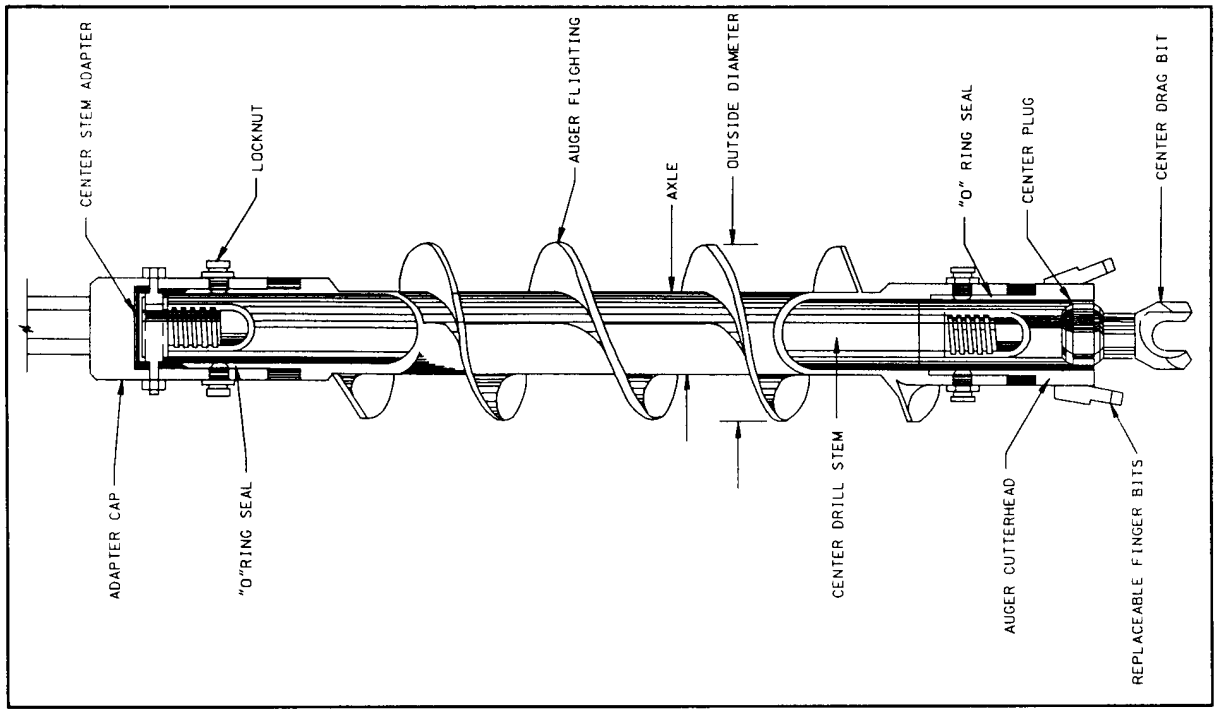

Figure 5-17. Isometric drawing of the hollow-stem auger with the center drag bit which can be used with soil sampling devices (after Acker 1974)