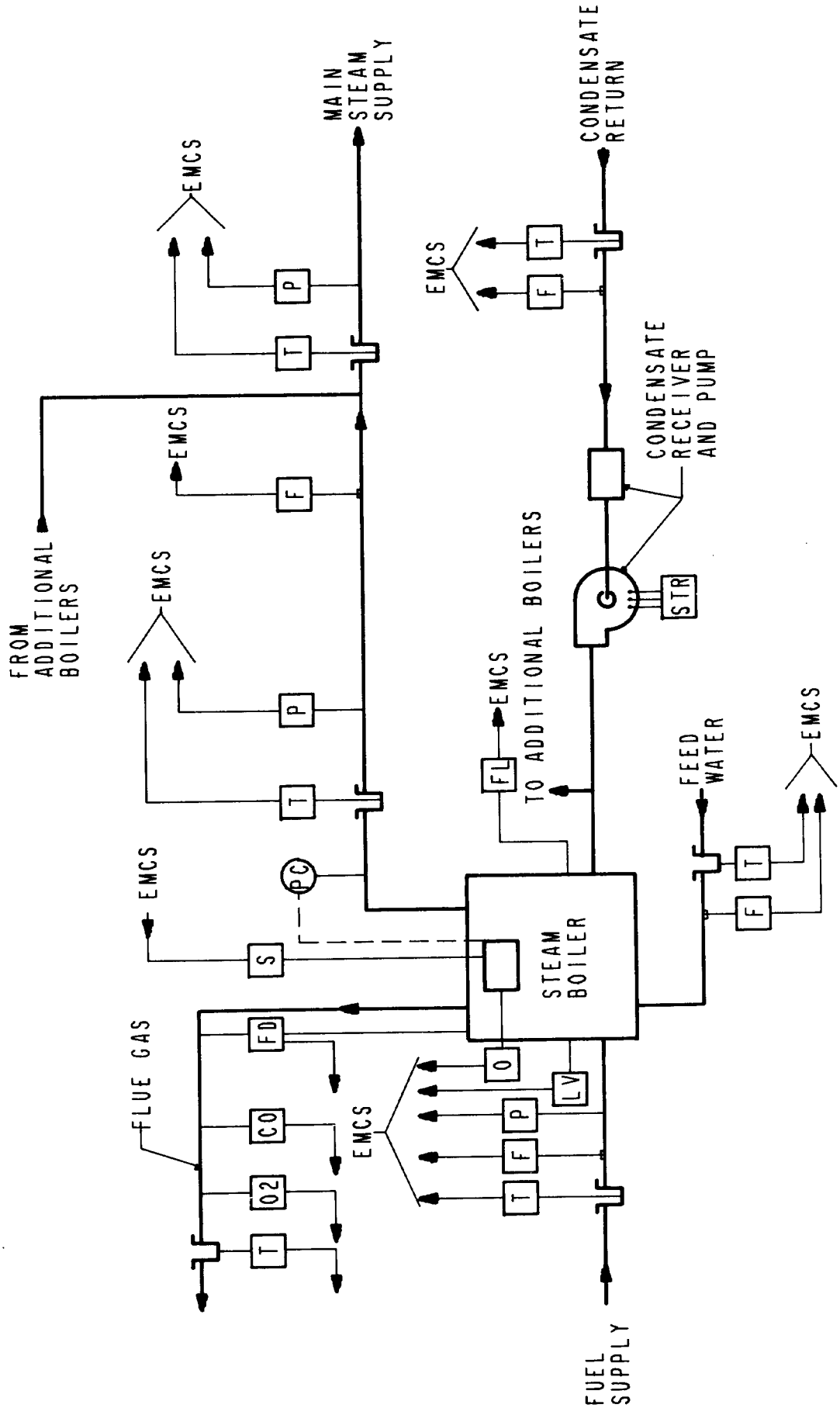

Figure 4-16. Steam boiler schematic.

BUILDING NO.	HARDWARE																							SOFTWARE																						
	OUTPUT								INPUT												ALARMS						APPLICATION PROGRAMS																				
	DIGITAL					ANALOG			DIGITAL							ANALOG					DIGITAL			ANALOG																						
SYSTEM(S) HOT WATER BOILER																																															
OCCUPANCY TIME																																															
GRAPHIC DISPLAY ●																																															
POINT DESCRIPTION	CONTROL RELAY	SOLENOID	HAND/OFF/AUTO	OFF/AUTO		CONTROL POINT ADJUSTMENT			PRESSURE SWITCH	DIFFERENTIAL PRESSURE SWITCH	FLOW SWITCH	AUXILIARY CONTACT	FLAME FAILURE	ZERO SPEED SWITCH	LEVEL	TEMPERATURE (DEGREES F)	% RELATIVE HUMIDITY	PSIG, PSIA, PSID	O2 ANALYZER	FLOW	CONTACT CLOSURE			HIGH LIMIT	LOW LIMIT	RUN TIME		SCHEDULED START/STOP	OPTIMUM START/STOP	DUTY CYCLING	DEMAND LIMITING	DAY/NIGHT SETBACK	ECONOMIZER	VENTILATION/RECIRCULATION	HOT/COLD DECK RESET	REHEAT COIL RESET	STEAM BOILER SELECTION	HOT WATER BOILER SELECTION	HW OA RESET	CHILLER SELECTION	CHILLED WATER RESET	CONDENSER WATER RESET	CHILLER DEMAND LIMIT	LIGHTING CONTROL	REMOTE BOILER MONITORING CONTROL				FAILURE MODE * *
HOT WATER BOILER	●											●														●																						C
MAIN HW SUPPLY																●				●				●	●													●							●			
MAIN HW RETURN																●								●	●													●							●			
BOILER HW SUPPLY						●										●				●				●	●													●	●						●			N
BOILER HW RETURN																●								●	●													●							●			
HOT WATER PUMP	●																				●					●																						C
FUEL SUPPLY																●		●		●																		●							●			
SAFETY ALARMS													●		●	●		●						●	●																							
FLUE GAS																●			●																									●				
FURNACE DRAFT																		●						●	●																			●				
OUTSIDE AIR *																●																																

* ONE MEASUREMENT FOR ENTIRE SYSTEM
* * C - LAST COMMAND O - ON (OPEN)
H - HIGH VALUE F - OFF (CLOSED)
L - LOW VALUE N - LOCAL LOOP

Table 4-17. I/O summary table for hot water boiler.

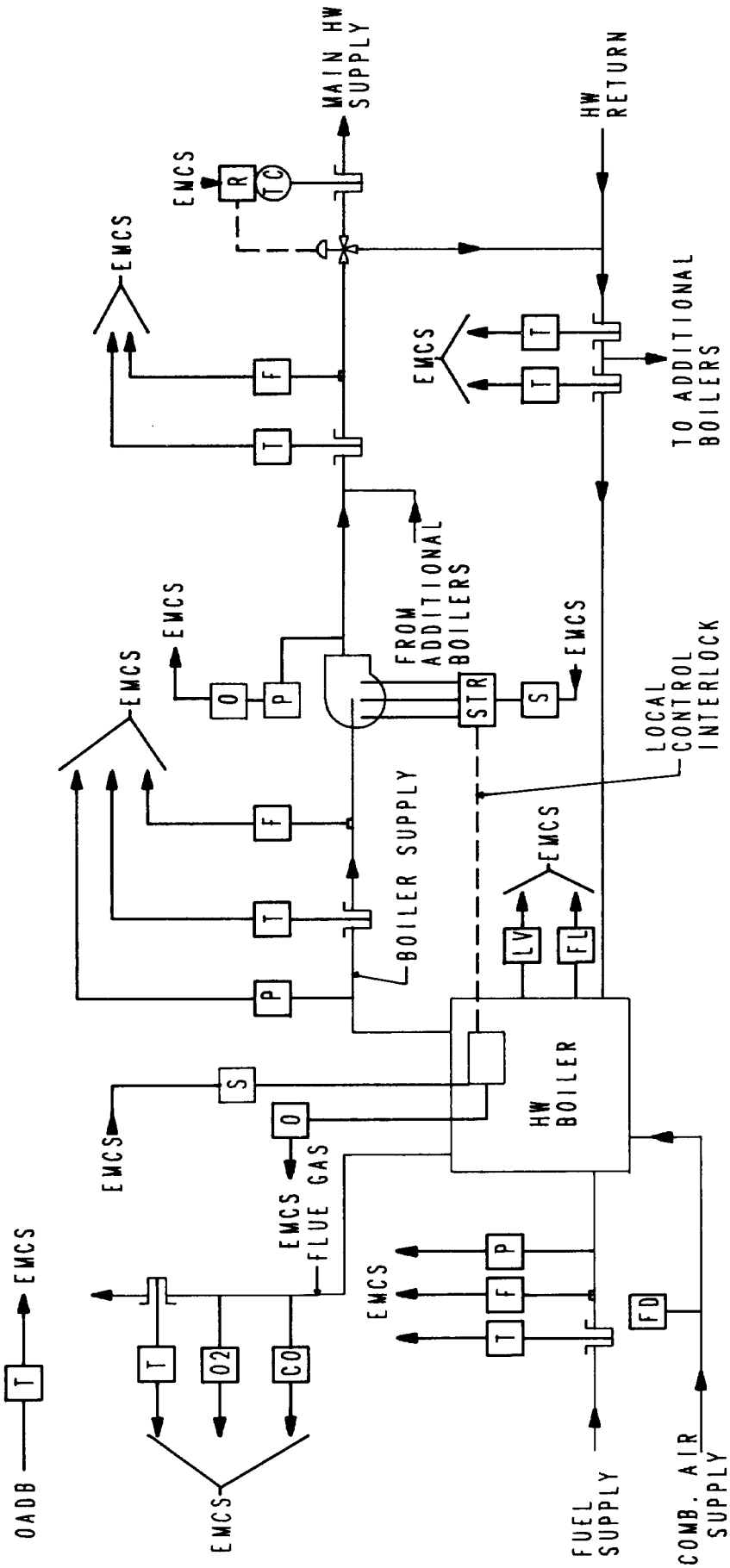

Figure 4-17. Hot water boiler schematic.

| BUILDING NO. | HARDWARE | | | | | | | | | | | | | | | | | | | | SOFTWARE | | | | | | | | | | | | | | | | | | |

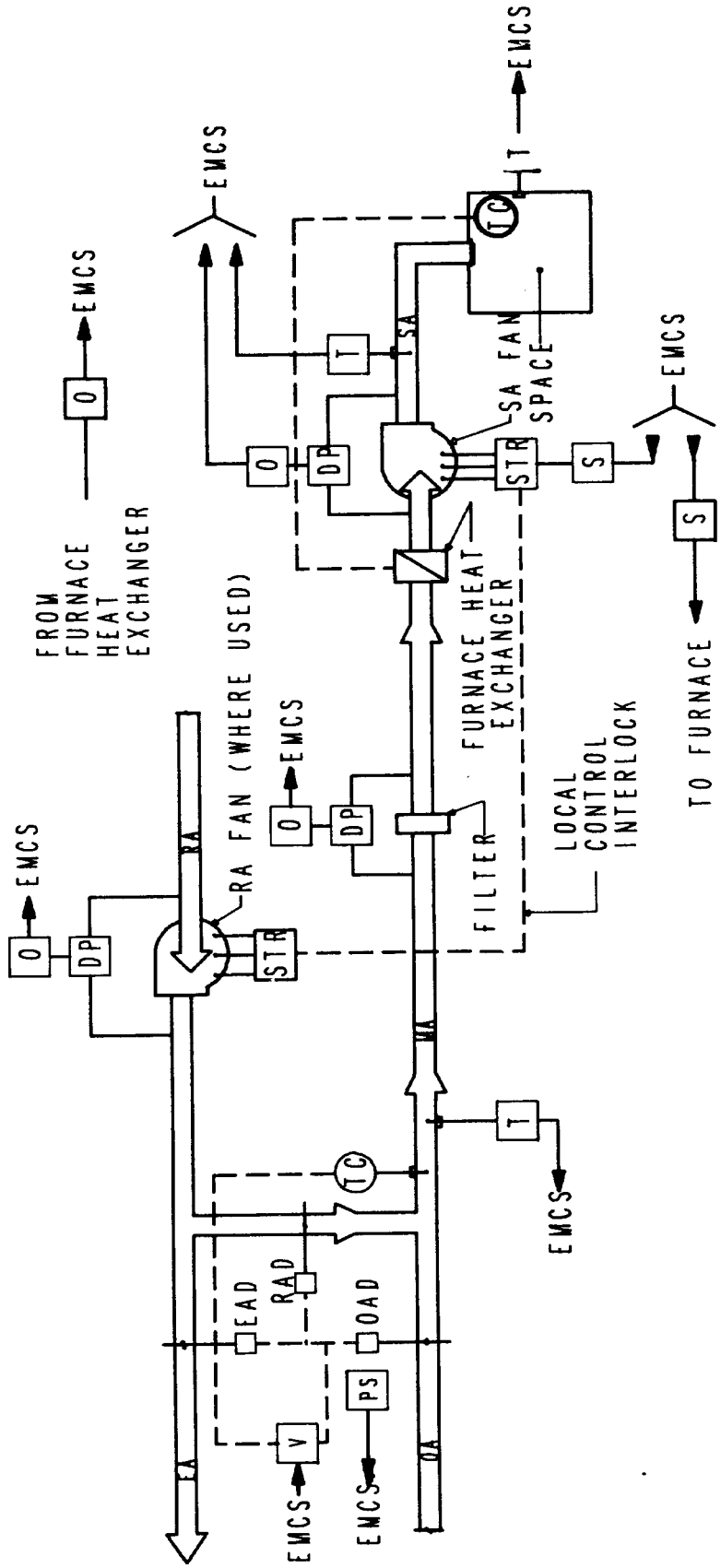

Figure 4-18. Direct fired furnace schematic.

BUILDING NO.	HARDWARE																				SOFTWARE																						
	OUTPUT								INPUT												ALARMS							APPLICATION PROGRAMS															
	DIGITAL					ANALOG			DIGITAL						ANALOG						DIGITAL			AMALOG																			
SYSTEM(S) DIRECT FIRED BOILER / OCCUPANCY TIME / GRAPHIC DISPLAY ● / POINT DESCRIPTION	CONTROL RELAY	SOLENOID	HAND/OFF/AUTO	OFF/AUTO		CONTROL POINT ADJUSTMENT			PRESSURE SWITCH	DIFFERENTIAL PRESSURE SWITCH	FLOW SWITCH	AUXILIARY CONTACT	PULSE			TEMPERATURE (DEGREES F)	% RELATIVE HUMIDITY	PSIG, PSIA, PSID	POSITION	FLOW	CONTACT CLOSURE			HIGH LIMIT	LOW LIMIT	RUN TIME		SCHEDULED START/STOP	OPTIMUM START/STOP	DUTY CYCLING	DEMAND LIMITING	DAY/NIGHT SETBACK	ECONOMIZER	VENTILATION/RECIRCULATION	HOT/COLD DECK RESET	REHEAT COIL RESET	STEAM BOILER SELECTION	HOT WATER BOILER SELECTION	HW OA RESET	CHILLER SELECTION	CHILLED WATER RESET	CONDENSER WATER RESET	CHILLER DEMAND LIMIT	LIGHTING CONTROL	REMOTE BOILER MONITORING CONTROL				FAILURE MODE * *
DIRECT FIRED BOILER												●									●																								
SUPPLY FAN	●									●											●					●		●	●	●	●	●														C
RETURN FAN										●											●																									
O. A. DAMPER				●														●														●		●											N
MIXED AIR																●								●	●																				N
SUPPLY AIR										●						●								●	●																				
SPACE																●								●	●			●	●			●													
FILTER										●											●																								
OUTSIDE AIR *																●																													

* ONE MEASUREMENT FOR ENTIRE SYSTEM
* * C - LAST COMMAND O - ON (OPEN)
H - HIGH VALUE F - OFF (CLOSED)
L - LOW VALUE N - LOCAL LOOP

Table 4-19. I/O summary table for direct fired boiler.

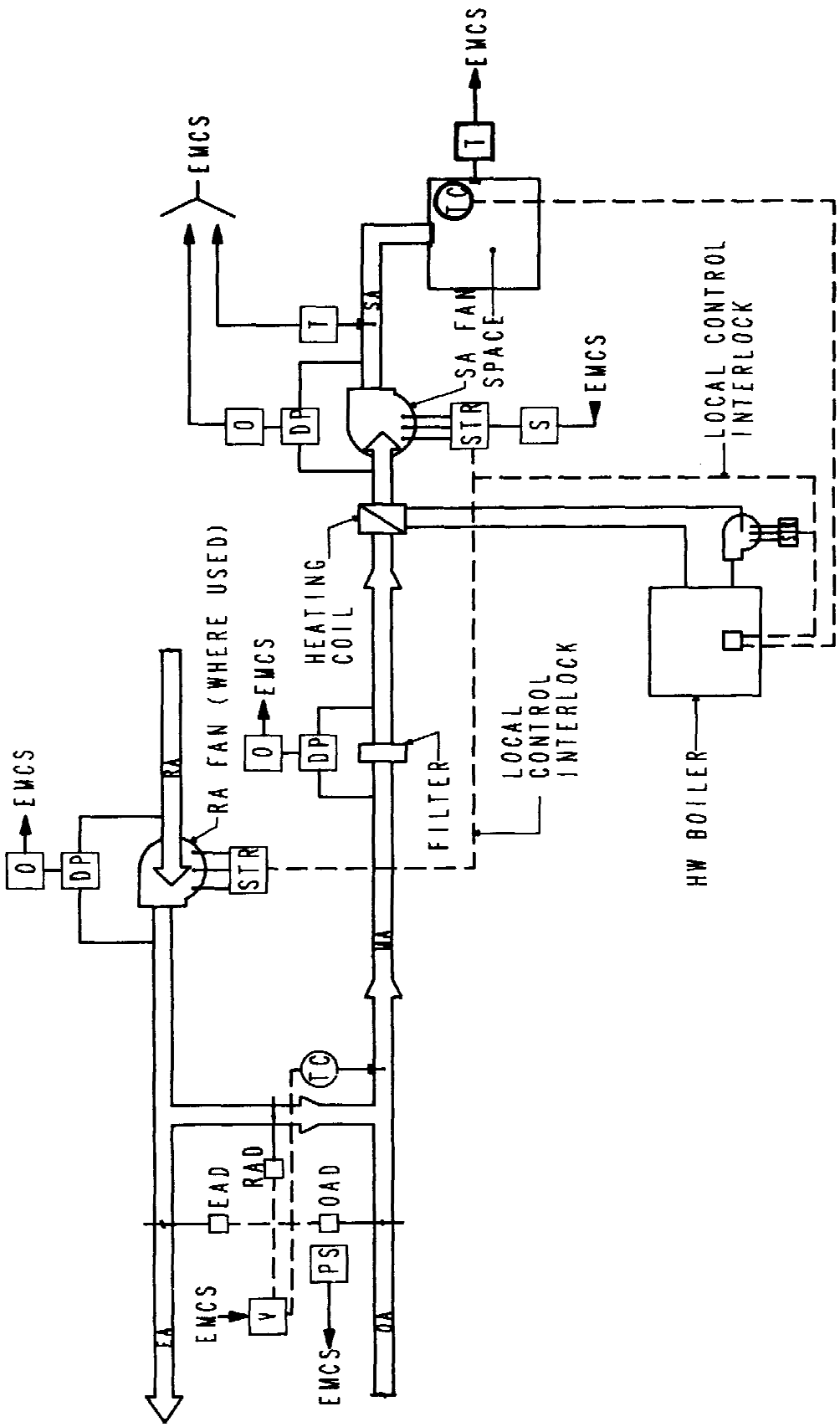

Figure 4-19. Direct fired boiler schematic.

BUILDING NO.	HARDWARE																					SOFTWARE																							
	OUTPUT								INPUT													ALARMS							APPLICATION PROGRAMS																
	DIGITAL					ANALOG			DIGITAL							ANALOG						DIGITAL			ANALOG																				
SYSTEM(S) STEAM HW CONVERTOR	CONTROL RELAY	SOLENOID	HAND/OFF/AUTO	OFF/AUTO		CONTROL POINT ADJUSTMENT			PRESSURE SWITCH	DIFFERENTIAL PRESSURE SWITCH	FLOW SWITCH	AUXILIARY CONTACT	PULSE			TEMPERATURE (DEGREES F)	% RELATIVE HUMIDITY	PSIG, PSIA, PSID	POSITION	FLOW		CONTACT CLOSURE			HIGH LIMIT	LOW LIMIT	RUN TIME		SCHEDULED START/STOP	OPTIMUM START/STOP	DUTY CYCLING	DEMAND LIMITING	DAY/NIGHT SETBACK	ECONOMIZER	VENTILATION/RECIRCULATION	HOT/COLD DECK RESET	REHEAT COIL RESET	STEAM BOILER SELECTION	HOT WATER BOILER SELECTION	HW OA RESET	CHILLER SELECTION	CHILLED WATER RESET	CONDENSER WATER RESET	CHILLER DEMAND LIMIT	LIGHTING CONTROL	REMOTE BOILER MONITORING CONTROL				FAILURE MODE *
OCCUPANCY TIME																																													
GRAPHIC DISPLAY ●																																													
POINT DESCRIPTION																																													
STEAM HW CONVERTOR																																													
HW SUPPLY						●										●									●	●			●	●			●						●							N
PUMP	●								●													●					●				●	●		●												C
SPACE SENSOR																●									●	●																			
OUTSIDE AIR *																●																													

* ONE MEASUREMENT FOR ENTIRE SYSTEM
* * C - LAST COMMAND O - ON (OPEN)
H - HIGH VALUE F - OFF (CLOSED)
L - LOW VALUE N - LOCAL LOOP

Table 4-20. I/O summary table for steam/HW converter.

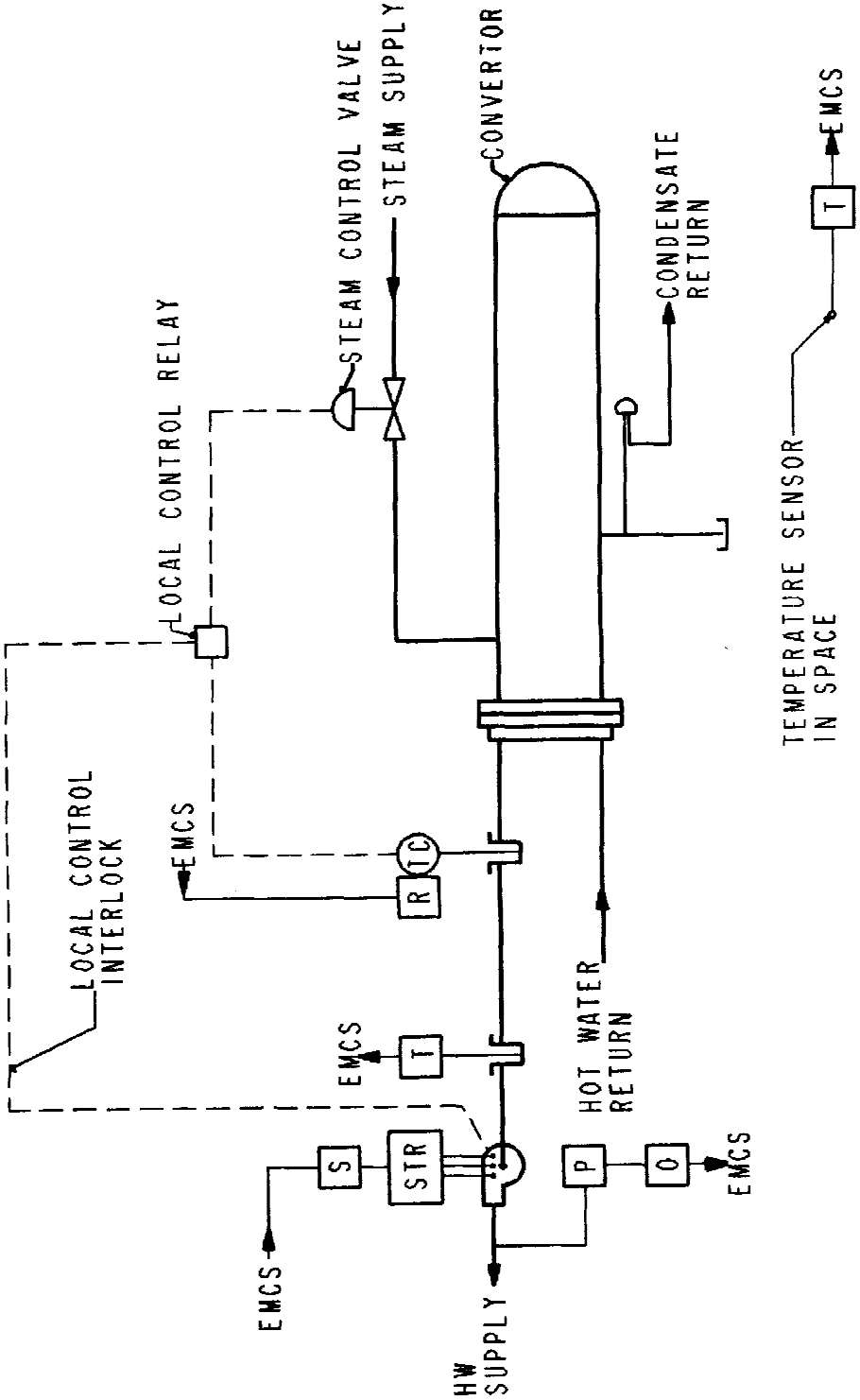

Figure 4-20. Steam/HW converter schematic.

BUILDING NO.	HARDWARE																								SOFTWARE																							
	OUTPUT								INPUT																ALARMS								APPLICATION PROGRAMS															
	DIGITAL					ANALOG			DIGITAL							ANALOG						DIGITAL			ANALOG																							
SYSTEM(S) HTHW STEAM CONVERTOR / OCCUPANCY TIME / GRAPHIC DISPLAY ● / POINT DESCRIPTION	CONTROL RELAY	SOLENOID	HAND/OFF/AUTO	OFF/AUTO		CONTROL POINT ADJUSTMENT			PRESSURE SWITCH	DIFFERENTIAL PRESSURE SWITCH	FLOW SWITCH	AUXILIARY CONTACT	PULSE			TEMPERATURE (DEGREES F)	% RELATIVE HUMIDITY	PSIG, PSIA, PSID	POSITION	FLOW	CONTACT CLOSURE			HIGH LIMIT	LOW LIMIT	RUN TIME		SCHEDULED START/STOP	OPTIMUM START/STOP	DUTY CYCLING	DEMAND LIMITING	DAY/NIGHT SETBACK	ECONOMIZER	VENTILATION/RECIRCULATION	HOT/COLD DECK RESET	REHEAT COIL RESET	STEAM BOILER SELECTION	HOT WATER BOILER SELECTION	HW OA RESET	CHILLER SELECTION	CHILLED WATER RESET	CONDENSER WATER RESET	CHILLER DEMAND LIMIT	LIGHTING CONTROL	REMOTE BOILER MONITORING CONTROL				FAILURE MODE * *
HTHW STEAM CONVERTOR																																																
HTHW SUPPLY																●									●	●																							
STEAM SUPPLY																		●							●	●																							
STEAM SUPPLY VALVE		●																														●																	C
SPACE SENSOR																●									●	●						●																	
OUTSIDE AIR *																●																																	

* ONE MEASUREMENT FOR ENTIRE SYSTEM
* * C - LAST COMMAND O - ON (OPEN)
H - HIGH VALUE F - OFF (CLOSED)
L - LOW VALUE N - LOCAL LOOP

Table 4-21. I/O summary table for HTHW/steam converter.

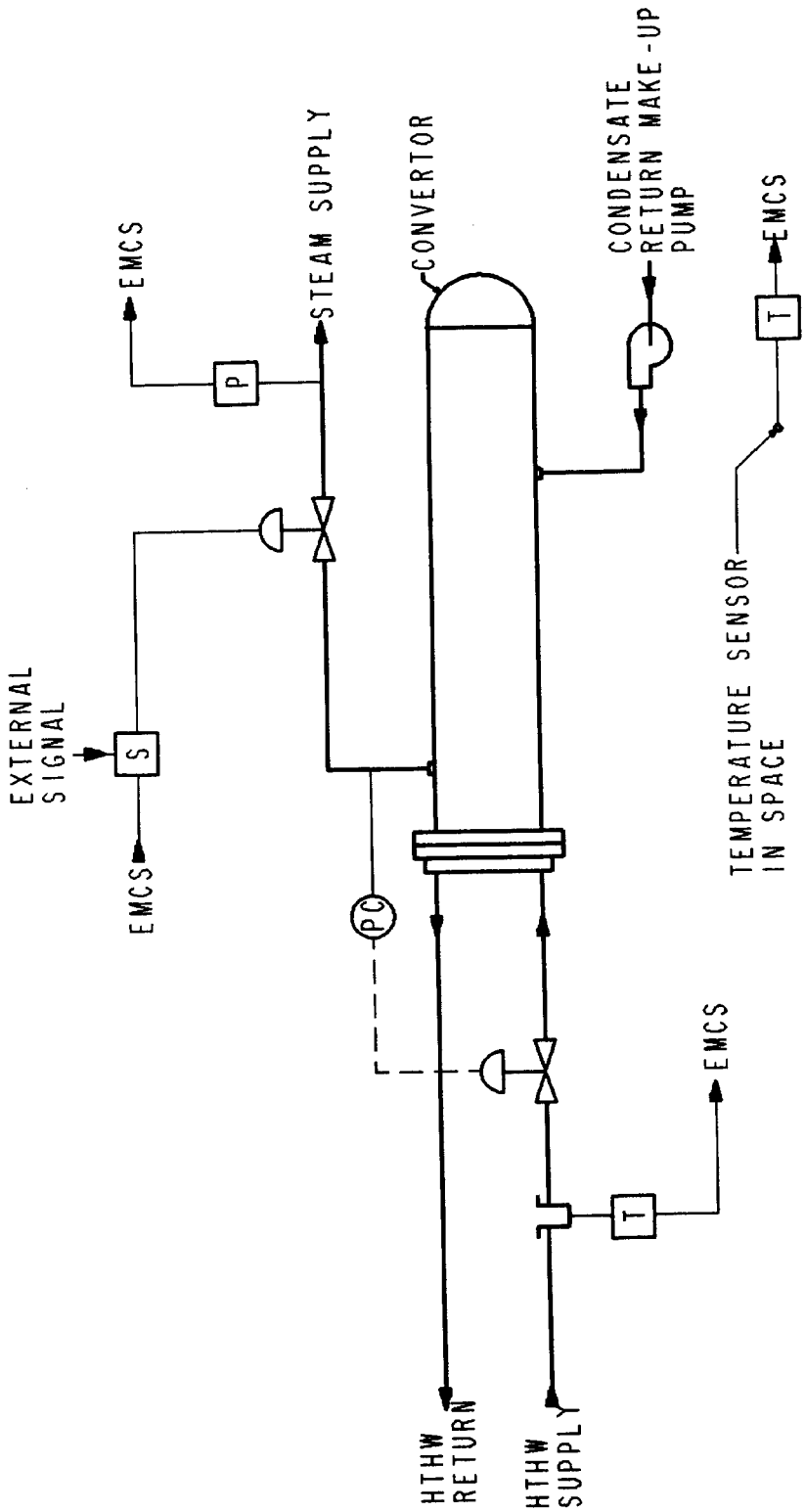

Figure 4–21. HTHW/steam converter schematic.

BUILDING NO.

SYSTEM(S)

HTHW - HW CONVERTOR

OCCUPANCY TIME

GRAPHIC DISPLAY ●

	HARDWARE																				SOFTWARE																								
	OUTPUT								INPUT												ALARMS							APPLICATION PROGRAMS																	
	DIGITAL					ANALOG			DIGITAL						ANALOG						DIGITAL			ANALOG																					
POINT DESCRIPTION	CONTROL RELAY	SOLENOID	HAND/OFF/AUTO	OFF/AUTO		CONTROL POINT ADJUSTMENT			PRESSURE SWITCH	DIFFERENTIAL PRESSURE SWITCH	FLOW SWITCH	AUXILIARY CONTACT	PULSE			TEMPERATURE (DEGREES F)	% RELATIVE HUMIDITY	PSIG, PSIA, PSID	POSITION	FLOW	CONTACT CLOSURE			HIGH LIMIT	LOW LIMIT	RUN TIME		SCHEDULED START/STOP	OPTIMUM START/STOP	DUTY CYCLING	DEMAND LIMITING	DAY/NIGHT SETBACK	ECONOMIZER	VENTILATION/RECIRCULATION	HOT/COLD DECK RESET	REHEAT COIL RESET	STEAM BOILER SELECTION	HOT WATER BOILER SELECTION	HW OA RESET	CHILLER SELECTION	CHILLED WATER RESET	CONDENSER WATER RESET	CHILLER DEMAND LIMIT	LIGHTING CONTROL	REMOTE BOILER MONITORING CONTROL				FAILURE MODE * *
HTHW - HW CONVERTOR																																													
HTHW SUPPLY																●								●	●																				N
HW SUPPLY						●										●								●	●															●						C
PUMP	●								●												●					●		●	●	●	●	●														
SPACE SENSOR																●								●	●				●	●		●														
OUTSIDE AIR *																●																														

* ONE MEASUREMENT FOR ENTIRE SYSTEM

* * C - LAST COMMAND O - ON (OPEN)
H - HIGH VALUE F - OFF (CLOSED)
L - LOW VALUE N - LOCAL LOOP

Table 4-22. I/O summary table for HTHW/HW converter.

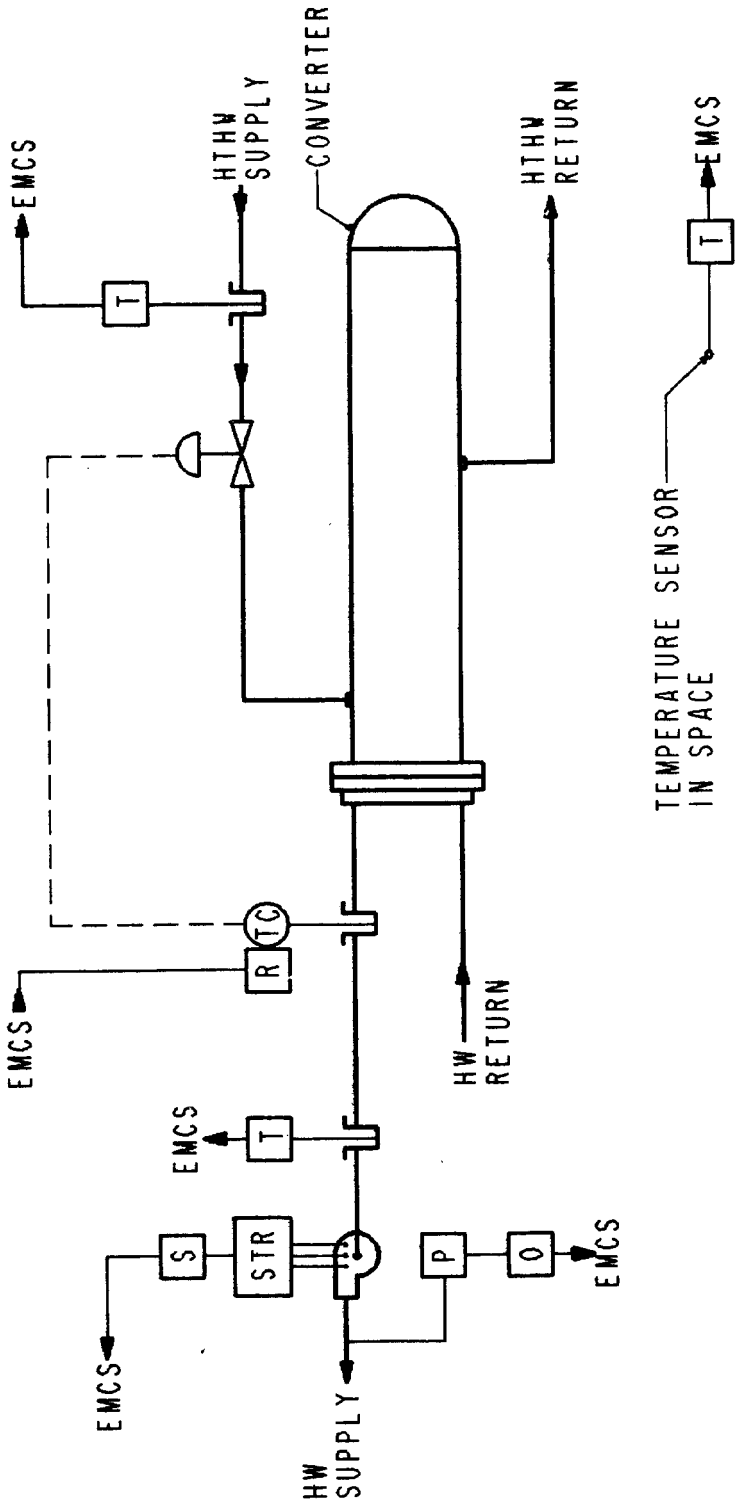

Figure 4-22. HTHW/HW converter schematic.

BUILDING NO.	HARDWARE																					SOFTWARE																							
	OUTPUT								INPUT													ALARMS								APPLICATION PROGRAMS															
	DIGITAL					ANALOG			DIGITAL							ANALOG						DIGITAL			ANALOG																				
SYSTEM(S) / WATER COOLED DX COMPRESSOR / OCCUPANCY TIME / GRAPHIC DISPLAY ● / POINT DESCRIPTION	CONTROL RELAY	SOLENOID	HAND'OFF/AUTO	OFF/AUTO		CONTROL POINT ADJUSTMENT			PRESSURE SWITCH	DIFFERENTIAL PRESSURE SWITCH		FLOW SWITCH	AUXILIARY CONTACT	PULSE	ZERO SPEED SWITCH		TEMPERATURE (DEGREES F)	% RELATIVE HUMIDITY	PSIG, PSIA, PSID	POSITION	KILOWATT	CONTACT CLOSURE			HIGH LIMIT	LOW LIMIT	RUN TIME		SCHEDULED START/STOP	OPTIMUM START/STOP	DUTY CYCLING	DEMAND LIMITING	DAY/NIGHT SETBACK	ECONOMIZER	VENTILATION/RECIRCULATION	HOT/COLD DECK RESET	REHEAT COIL RESET	STEAM BOILER SELECTION	HOT WATER BOILER SELECTION	HW OA RESET	CHILLER SELECTION	CHILLED WATER RESET	CONDENSER WATER RESET	CHILLER DEMAND LIMIT	LIGHTING CONTROL	REMOTE BOILER MONITORING CONTROL				FAILURE MODE * *
WATER COOLED DX COMP.	●												●								●	●					●		●	●	●	●															
CONDENSOR PUMP									●													●					●																				
COOLING TOWER FAN													●									●					●																	●			
CONDENSER WATER						●											●			●					●	●																	●			
SUCTION PRESSURE																			●						●	●																				
HEAD PRESSURE																			●						●	●																				
SAFETY ALARM													●									●																								
OIL PRESSURE																			●						●	●																				
OUTSIDE AIR *																	●	●																												

* ONE MEASUREMENT FOR ENTIRE SYSTEM
* * C - LAST COMMAND O - ON (OPEN)
H - HIGH VALUE F - OFF (CLOSED)
L - LOW VALUE N - LOCAL LOOP

Table 4-23. I/O summary table for water cooled DX compressor.

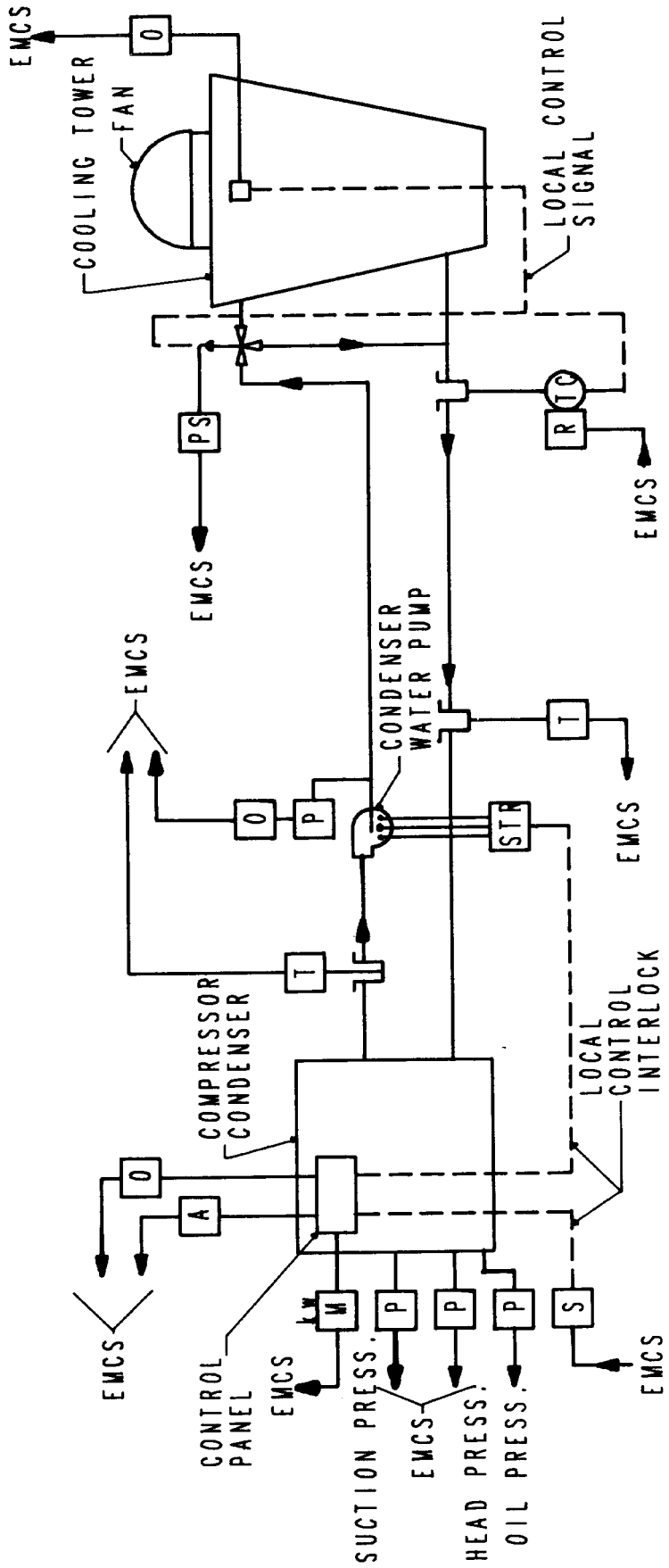

Figure 4-23. Water cooled DX compressor schematic.

| BUILDING NO. | HARDWARE | | | | | | | | | | | | | | | | | | | | | | | | SOFTWARE | | | | | | | | | | | | | | | | | | |

BUILDING NO.	HARDWARE																					SOFTWARE																					
	OUTPUT								INPUT													ALARMS																					
	DIGITAL					ANALOG			DIGITAL							ANALOG						DIGITAL			ANALOG				APPLICATION PROGRAMS														
SYSTEM(S) AIR COOLED CHILLER / OCCUPANCY TIME / GRAPHIC DISPLAY ● / POINT DESCRIPTION	CONTROL RELAY	SOLENOID	HAND/OFF/AUTO	OFF/AUTO		CONTROL POINT ADJUSTMENT			PRESSURE SWITCH	DIFFERENTIAL PRESSURE SWITCH	FLOW SWITCH	AUXILIARY CONTACT	PULSE			TEMPERATURE (DEGREES F)	% RELATIVE HUMIDITY	PSIG, PSIA, PSID	POSITION	FLOW	CONTACT CLOSURE			HIGH LIMIT	LOW LIMIT	RUN TIME		SCHEDULED START/STOP	OPTIMUM START/STOP	DUTY CYCLING	DEMAND LIMITING	DAY/NIGHT SETBACK	ECONOMIZER	VENTILATION/RECIRCULATION	HOT/COLD DECK RESET	REHEAT COIL RESET	STEAM BOILER SELECTION	HOT WATER BOILER SELECTION	HW OA RESET	CHILLER SELECTION	CHILLED WATER RESET	CONDENSER WATER RESET	CHILLER DEMAND LIMIT	LIGHTING CONTROL	REMOTE BOILER MONITORING CONTROL				FAILURE MODE * *
AIR COOLED CHILLER																																								●								
CHILLER WATER PUMP	●								●													●				●		●	●																			C
CONDENSER FAN												●										●				●																						
CW SUPPLY						●										●									●	●																●						N
SAFETY ALARM												●										●																										
OUTSIDE AIR *																●																																

* ONE MEASUREMENT FOR ENTIRE SYSTEM
* * C - LAST COMMAND O - ON (OPEN)
H - HIGH VALUE F - OFF (CLOSED)
L - LOW VALUE N - LOCAL LOOP

Table 4-25. I/O summary table for air cooled chillers.

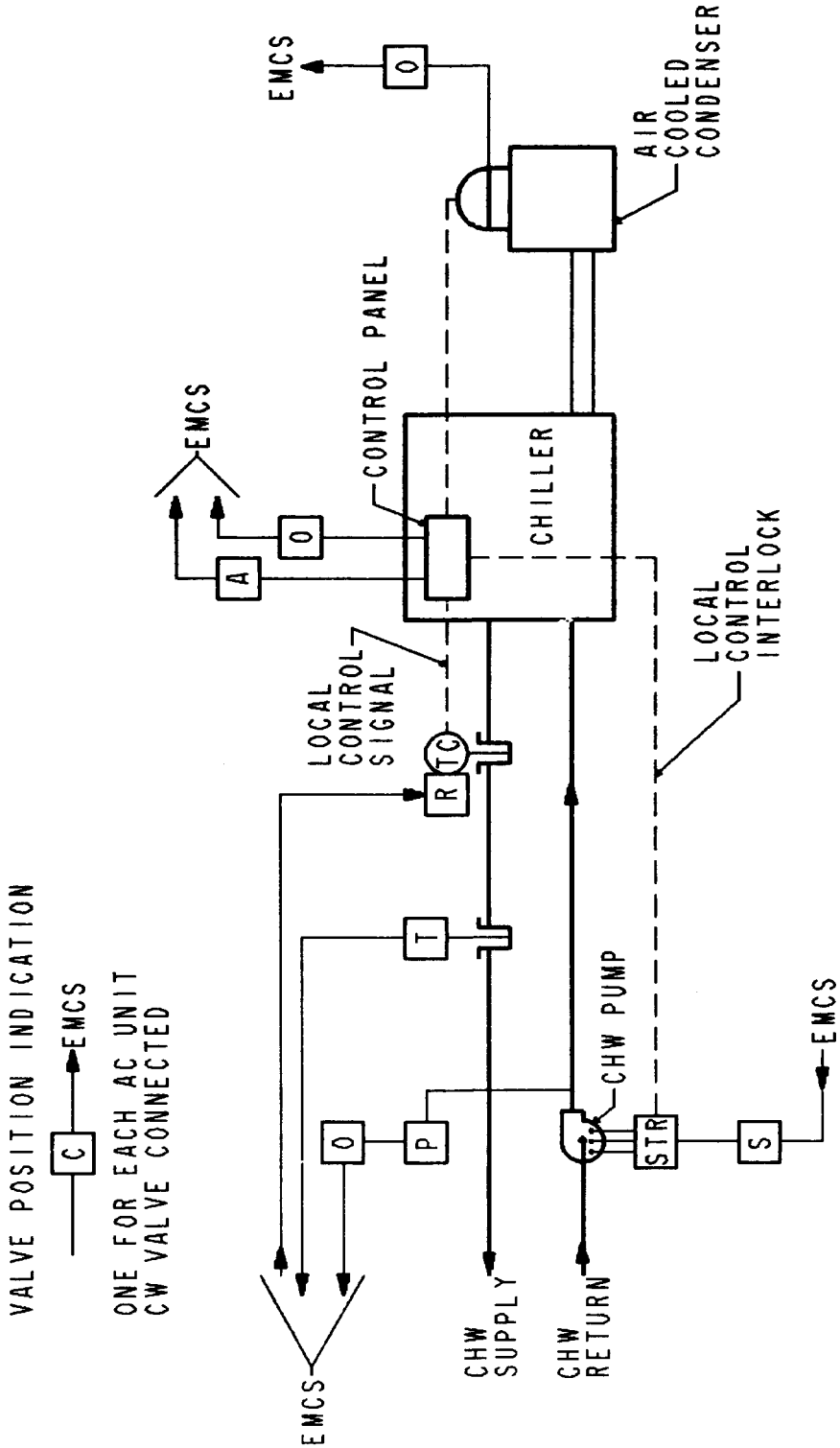

Figure 4-25. Air cooled chiller schematic.

BUILDING NO.	HARDWARE																								SOFTWARE																					
	OUTPUT								INPUT												ALARMS				APPLICATION PROGRAMS																					
	DIGITAL					ANALOG			DIGITAL					ANALOG						DIGITAL			ANALOG																							
SYSTEM(S) WATER COOLED CHILLER / OCCUPANCY TIME / GRAPHIC DISPLAY ● / POINT DESCRIPTION	CONTROL RELAY	SOLENOID	HAND/OFF/AUTO	OFF/AUTO		CONTROL POINT ADJUSTMENT			PRESSURE SWITCH	DIFFERENTIAL PRESSURE SWITCH	FLOW SWITCH	AUXILIARY CONTACT	PULSE		KILOWATT	TEMPERATURE (DEGREES F)	% RELATIVE HUMIDITY	PSIG, PSIA, PSID	POSITION	FLOW	CONTACT CLOSURE			HIGH LIMIT	LOW LIMIT	RUN TIME		SCHEDULED START/STOP	OPTIMUM START/STOP	DUTY CYCLING	DEMAND LIMITING	DAY/NIGHT SETBACK	ECONOMIZER	VENTILATION/RECIRCULATION	HOT/COLD DECK RESET	REHEAT COIL RESET	STEAM BOILER SELECTION	HOT WATER BOILER SELECTION	HW OA RESET	CHILLER SELECTION	CHILLED WATER RESET	CONDENSER WATER RESET	CHILLER DEMAND LIMIT	LIGHTING CONTROL	REMOTE BOILER MONITORING CONTROL				FAILURE MODE * *
WATER COOLED CHILLER	●											●			●						●				●																	●			●					C
CHW PUMP	●								●												●				●																									C
COND. WATER PUMP									●												●				●																									
COOLING TOWER FAN												●									●				●																									
CHW SUPPLY						●										●			●	●				●	●																		●							N
CHW RETURN																●								●	●																									
COND. WATER SUPPLY						●										●			●	●				●	●																			●						N
COND. WATER RET.																●								●	●																									
SAFETY ALARM												●									●																													
OIL PRESSURE																		●						●	●																									
HEAD PRESSURE																		●						●	●																									
SUCTION PRESSURE																		●						●	●																									
OUTSIDE AIR *																●																																		

* ONE MEASUREMENT FOR ENTIRE SYSTEM
* * C - LAST COMMAND O - ON (OPEN)
H - HIGH VALUE F - OFF (CLOSED)
L - LOW VALUE M - LOCAL LOOP

Table 4-26. I/O summary table for water cooled chiller.

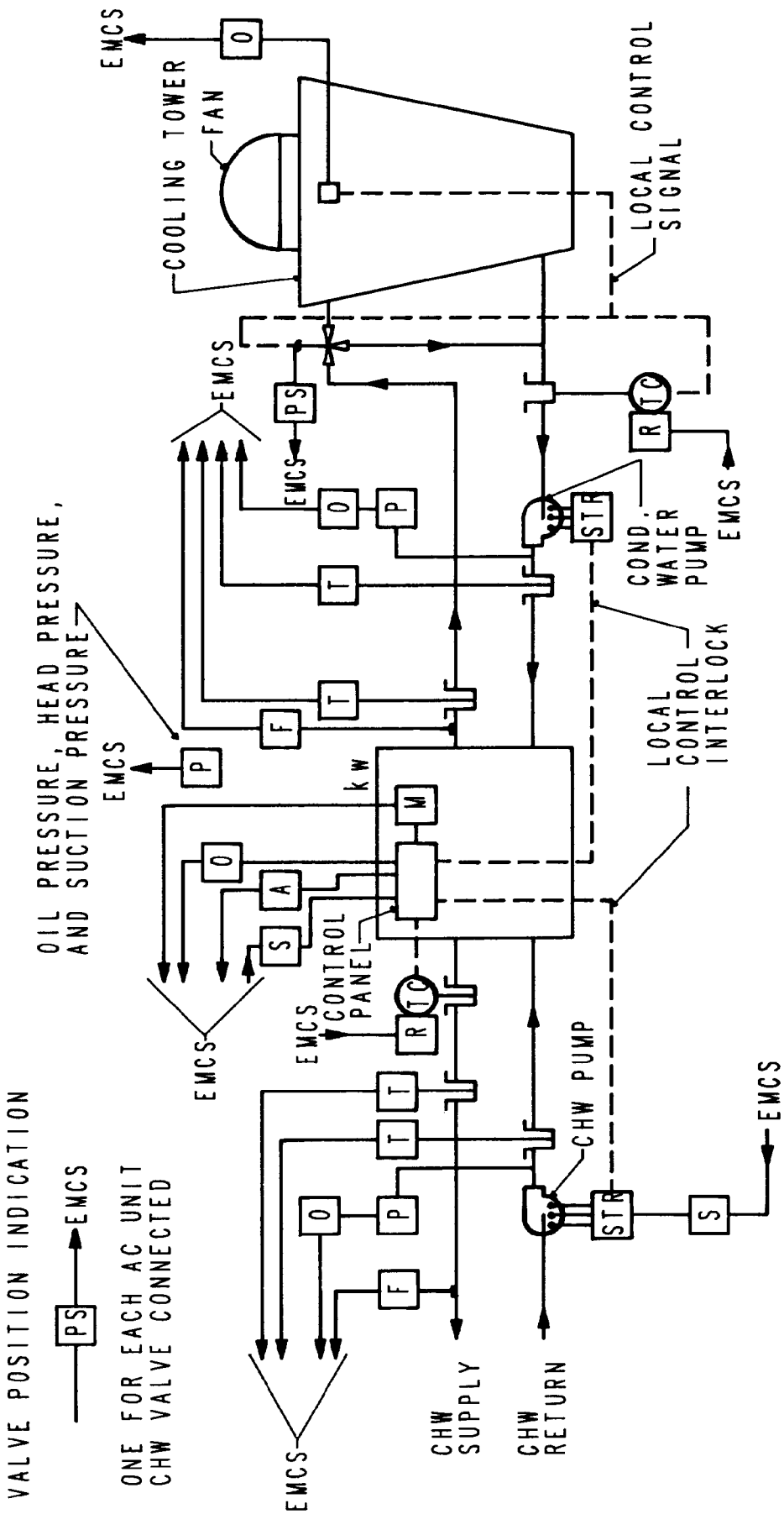

Figure 4–26. Water cooled chiller schematic.

| BUILDING NO. | HARDWARE | | | | | | | | | | | | | | | | | | | | | | SOFTWARE | | | | | | | | | | | | | | | | | | |

BUILDING NO.	HARDWARE																					SOFTWARE																																		
	OUTPUT							INPUT														ALARMS							APPLICATION PROGRAMS																											
	DIGITAL				ANALOG			DIGITAL							ANALOG							DIGITAL			ANALOG																																
SYSTEM(S) OIL/GAS DOMESTIC WATER HEATER / OCCUPANCY TIME / GRAPHIC DISPLAY ● / POINT DESCRIPTION	CONTROL RELAY	SOLENOID	HAND/OFF/AUTO	OFF/AUTO	CONTROL POINT ADJUSTMENT			PRESSURE SWITCH	DIFFERENTIAL PRESSURE SWITCH	FLOW SWITCH	AUXILIARY CONTACT	PULSE			TEMPERATURE (DEGREES F)	% RELATIVE HUMIDITY	PSIG, PSIA, PSID	POSITION	FLOW	CONTACT CLOSURE			HIGH LIMIT	LOW LIMIT	RUN TIME	SCHEDULED START/STOP	OPTIMUM START/STOP	DUTY CYCLING	DEMAND LIMITING	DAY/NIGHT SETBACK	ECONOMIZER	VENTILATION/RECIRCULATION	HOT/COLD DECK RESET	REHEAT COIL RESET	STEAM BOILER SELECTION	HOT WATER BOILER SELECTION	HW OA RESET	CHILLER SELECTION	CHILLED WATER RESET	CONDENSER WATER RESET	CHILLER DEMAND LIMIT.	LIGHTING CONTROL	REMOTE BOILER MONITORING CONTROL				FAILURE MODE * *
OIL/GAS WATER HEATER		●									●									●							●																												C
OUTSIDE AIR *																																																						

* ONE MEASUREMENT FOR ENTIRE SYSTEM
* * C - LAST COMMAND O - ON (OPEN)
H - HIGH VALUE F - OFF (CLOSED)
L - LOW VALUE N - LOCAL LOOP

Table 4-28. I/O summary table for oil/gas domestic water heater.

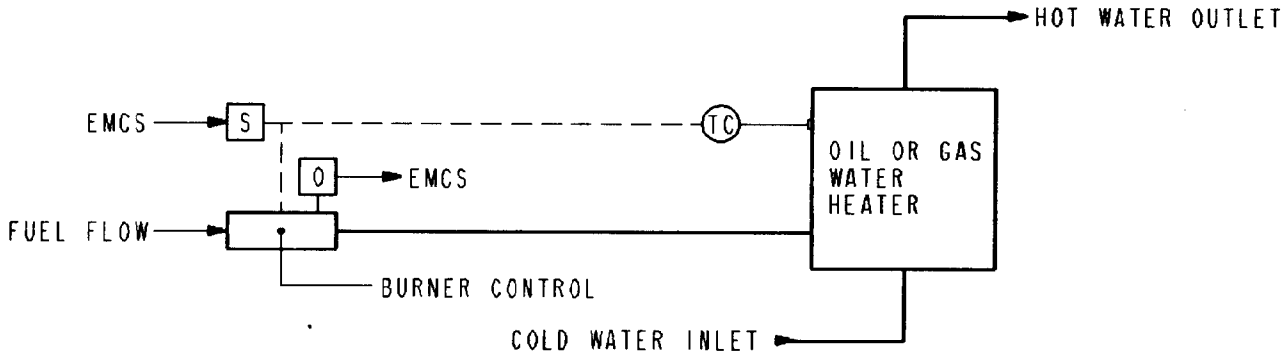

Figure 4-28. Oil/gas domestic water heater schematic.

| BUILDING NO. | HARDWARE | | | | | | | | | | | | | | | | | | | | SOFTWARE | | | | | | | | | | | | | | | | | | |

→	EMCS SIGNAL TRANSMITTED TO EMCS
←	EMCS SIGNAL TRANSMITTED FROM EMCS
A	ALARM CONTACT SIGNAL
E	ECONOMIZER CONTROL INTERFACE
F	FLOW INDICATION
FL	FLAME INDICATION
H	HUMIDITY INDICATION
P	PRESSURE INDICATION
LV	LEVEL INDICATION
M	METER
O	ON-OFF STATUS SIGNAL
DP	DIFFERENTIAL PRESSURE SWITCH
R	CONTROLLER RESET INTERFACE
S	START-STOP INTERFACE
T	TEMPERATURE INDICATION
V	VENTILATION/RECIRCULATION CONTROL
PS	POSITION
O_2	FLUE GAS ANALYSIS, OXYGEN
CO	FLUE GAS ANALYSIS, CARBON MONOXIDE
FD	FURNACE DRAFT DIFFERENTIAL PRESSURE
DS	HIGH-LOW DEMAND SIGNAL SELECTOR
TC	TEMPERATURE CONTROLLER
PC	PRESSURE CONTROLLER
STR	MOTOR STARTER
	SENSOR INSTALLED IN THERMOMETER WELL
	SENSOR INSTALLED IN DUCT OR PLENUM
CHW	CHILLED WATER
EA	EXHAUST AIR
SA	SUPPLY AIR
RA	RETURN AIR
OA	OUTSIDE AIR
MA	MIXED AIR
WB	WET BULB
DB	DRY BULB
OAD	OUTSIDE AIR DAMPER
RAD	RETURN AIR DAMPER
EAD	EXHAUST AIR DAMPER
MZD	MULTIZONE DAMPER
RH	RELATIVE HUMIDITY

Table 4-30. Symbols and abbreviations.