# Chapter 24
# List of Plates

1. Design Procedures
2. Discharge Arrangements, Conventional Stations
3. Discharge Arrangements, Large Stations
4. Pump Station With Over the Protection Discharge
5. Discharge Chamber Pump Station
6. Combination Gatewell/Pump Station Using Submersible Pumps
7. Plan Views: Combined Gatewell/Pump Stations
8. Profiles: Combined Gatewell/Pump Stations
9. RTD Installation for Vertical Wet Pit Pumps
10. One-Line Diagram for Electrical System Studies
11A. Power Supply System Configurations: Components of an Electric Power System
11B. Power Supply System Configurations: Typical One-Line Diagrams for Distribution-Type Substations
12. One-Line diagram of a Typical Low-Voltage Station
13. One-Line diagram of a Typical Medium-Voltage Station
14. Typical Controller Lineup and Power and Lighting Panel Layouts
15A. Typical Low-Voltage Motor Control Schematic Showing Full-Voltage Nonreversing Circuit Breaker Type
15B. Typical Low-Voltage Motor Control Schematic Showing Full-Voltage Nonreversing Fusible Switch Type
15C. Typical Low-Voltage Motor Control Schematic Showing Reduced-Voltage Nonreversing Autotransformer Type (Closed Transition)
16. Typical Medium-Voltage, Full-Voltage Induction Nonreversing Control Relay Logic
17. Typical Medium-Voltage, Reduced-Voltage Induction Nonreversing Control Relay Logic
18. Typical Medium-Voltage, Full-Voltage Brushless Synchronous Nonreversing Control Relay Logic
19. Typical Medium-Voltage, Full-Voltage Induction Nonreversing Control Schematic Microprocessor-Based Protective Logic
20. Typical Remote Control Console
21. Typical Grounding Plan Utilizing Driven Electrodes
22. Typical Grounding Plan Utilizing Ground Grid
23. Vertical Wet Pit Pump
24. Submersible Propeller Pump
25. Submersible Volute Pump

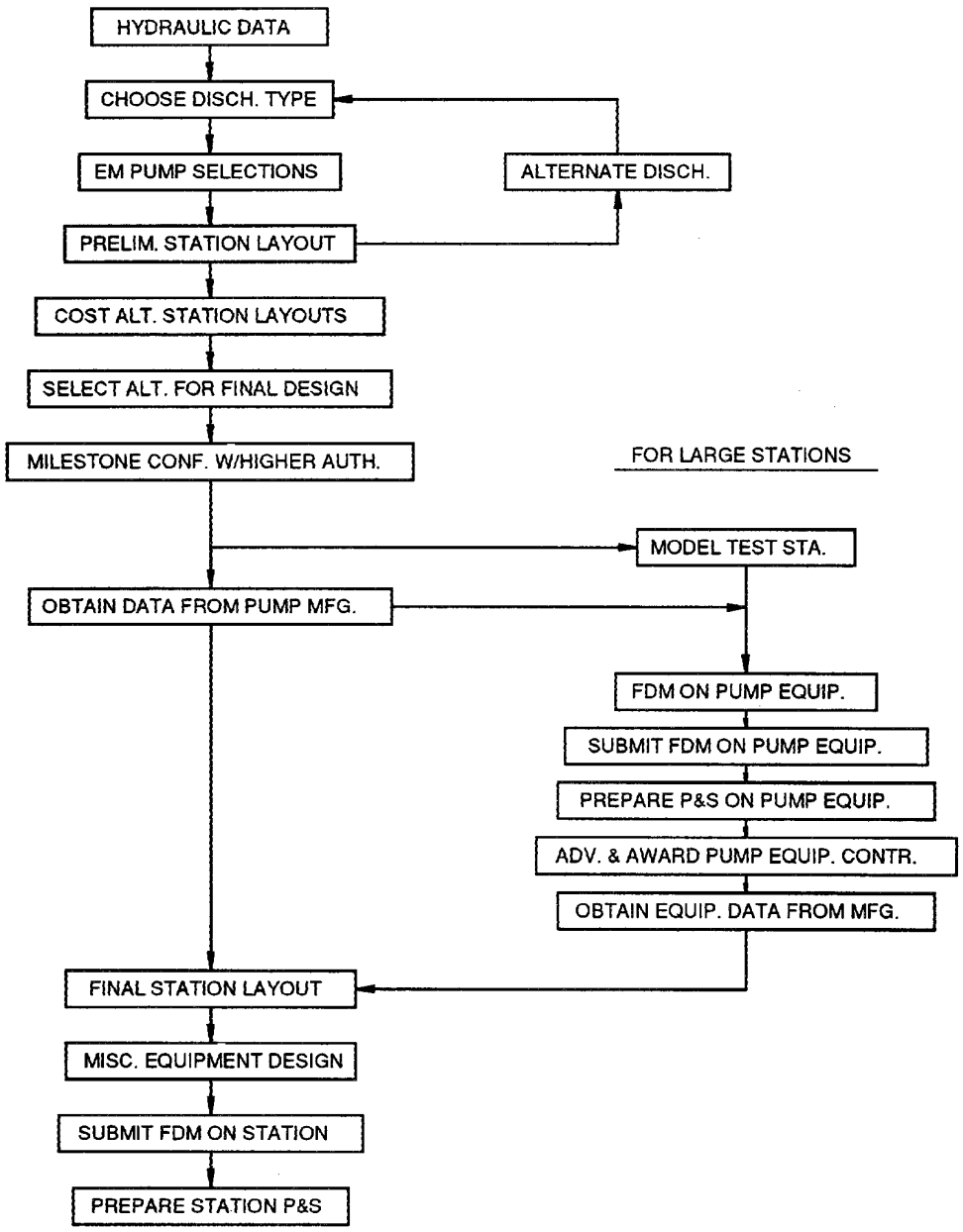


DESIGN PROCEDURES

DISCHARGE ARRANGEMENTS

CONVENTIONAL STATIONS

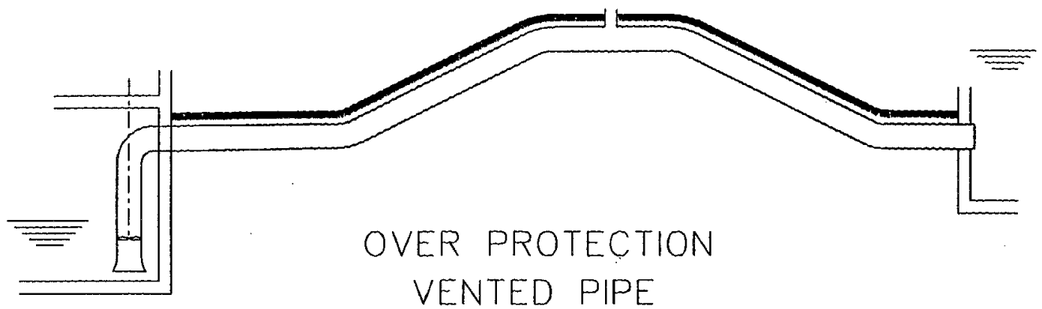

OVER PROTECTION
VENTED PIPE

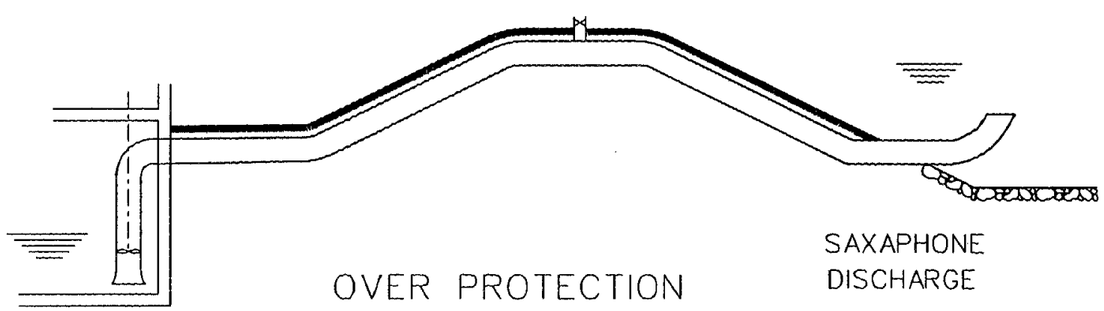

OVER PROTECTION
WITH SIPHON



SAXAPHONE
DISCHARGE

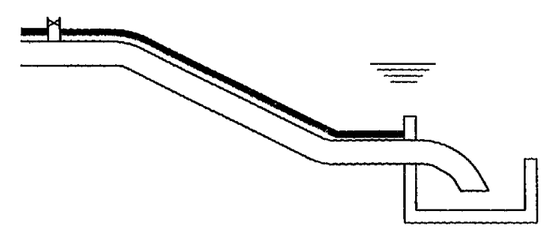

SEAL WEIR
DISCHARGE

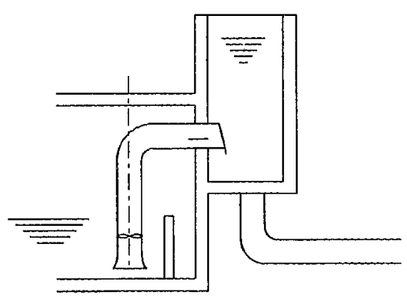

DISCHARGE CHAMBER

DISCHARGE ARRANGEMENTS

LARGE STATIONS

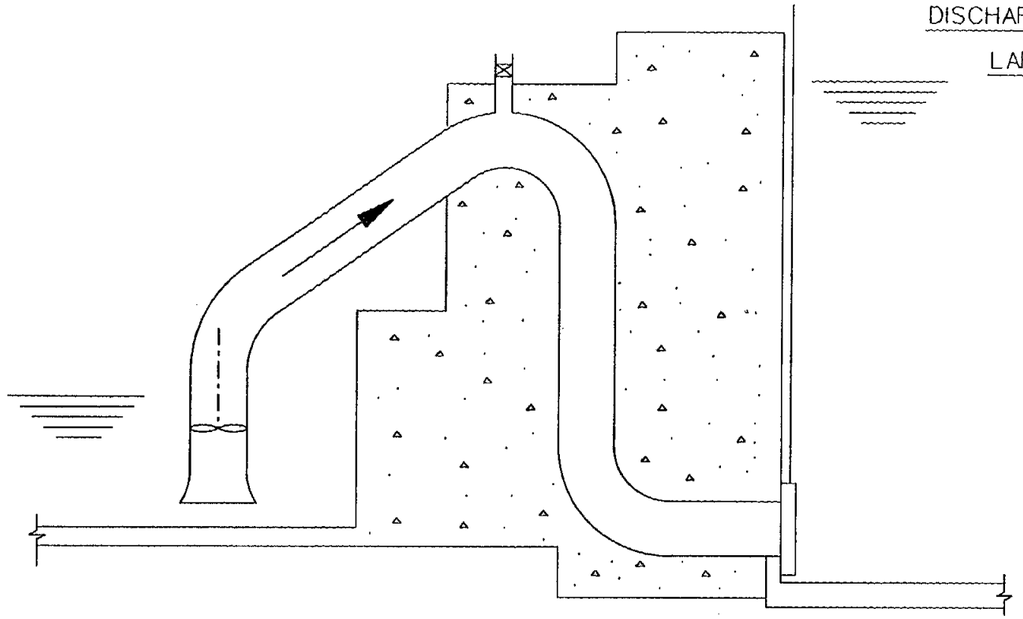

PARTIAL SIPHON
WITH MAX. WATER LEVEL
ABOVE SIPHON INVERT

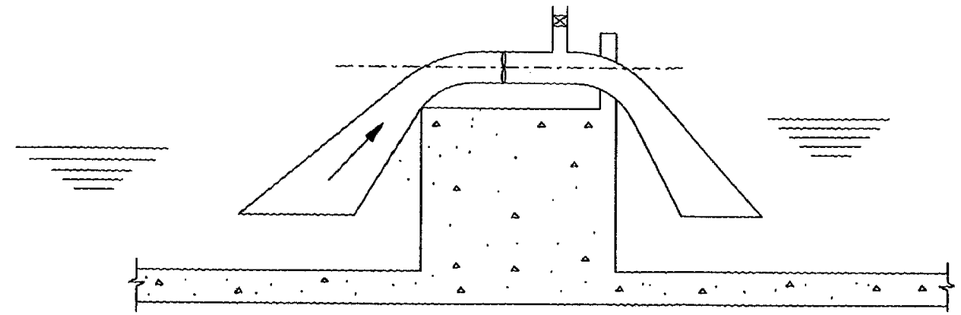

HORIZONTAL PUMP WITH IMPELLER
ABOVE DISCHARGE MAX. WATER LEVEL

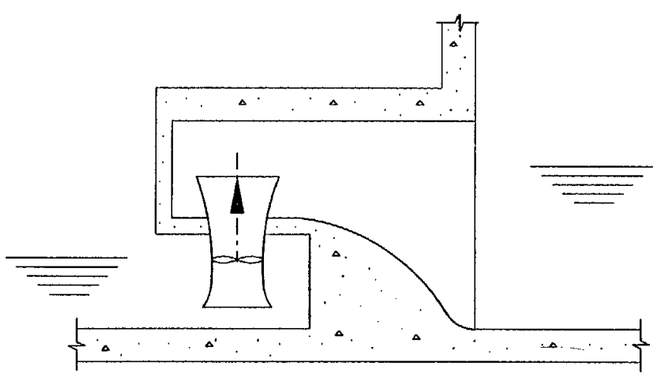

FLOWER POT

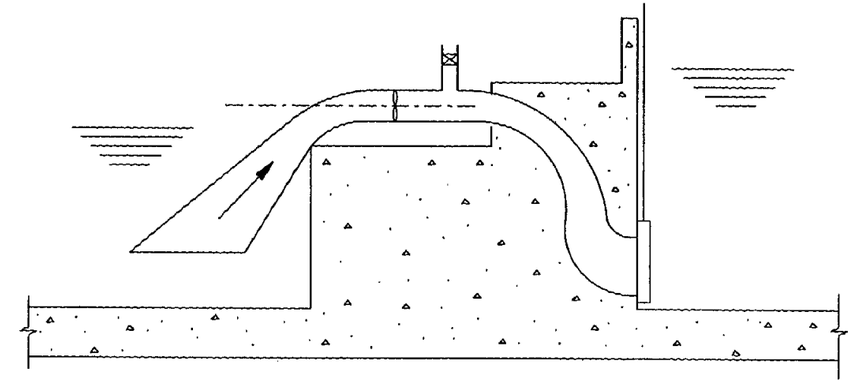

HORIZONTAL PUMP WITH IMPELLER
BELOW MAX. DISCHARGE WATER LEVEL

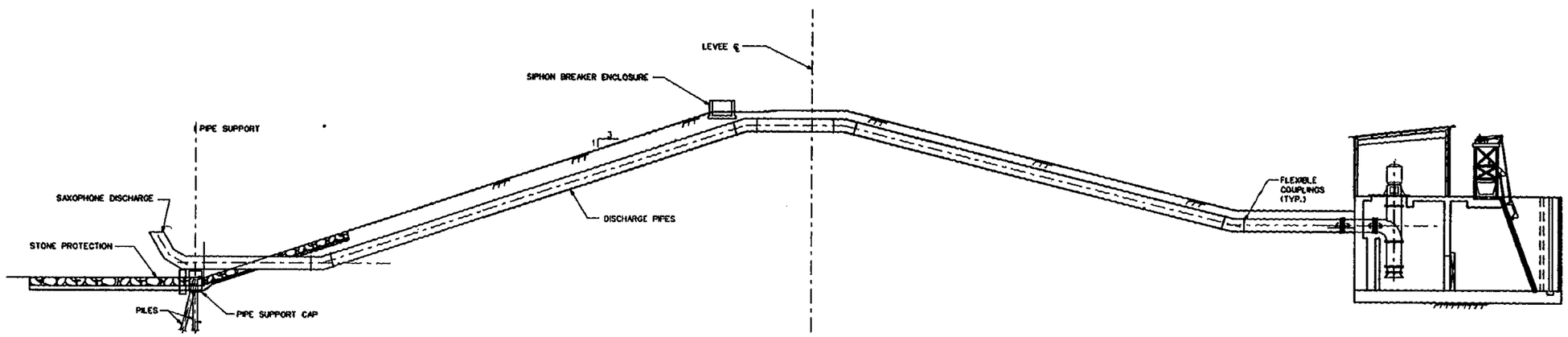


PUMP STATION WITH OVER THE PROTECTION DISCHARGE

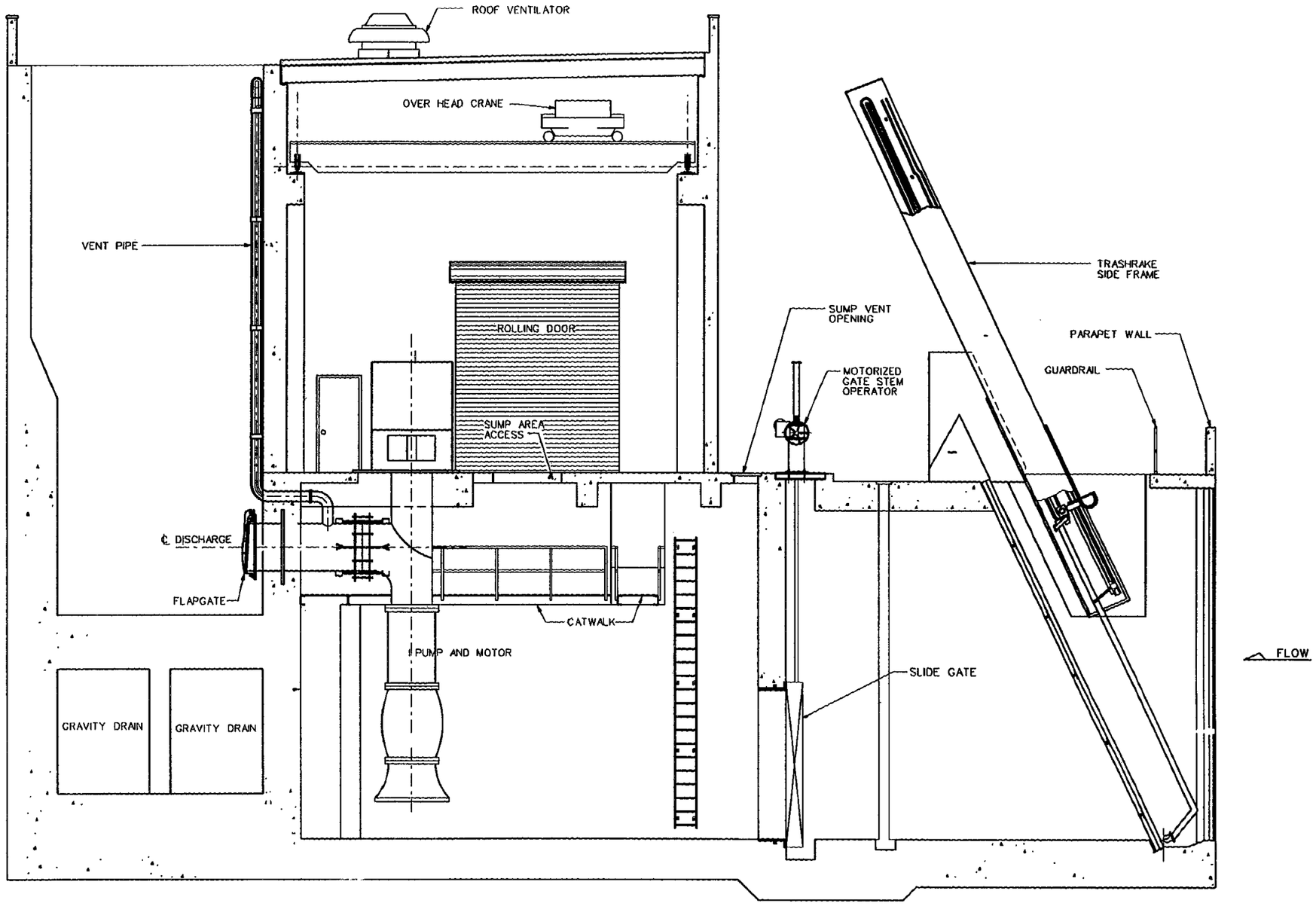


DISCHARGE CHAMBER PUMP STATION

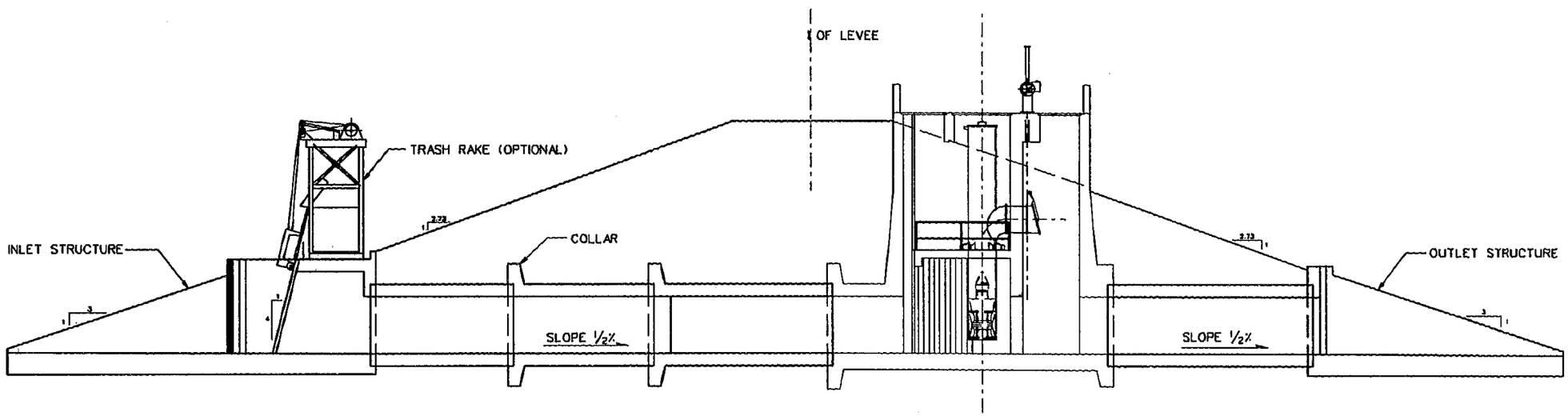


COMBINATION GATEWELL/PUMP STATION USING SUBMERSIBLE PUMPS

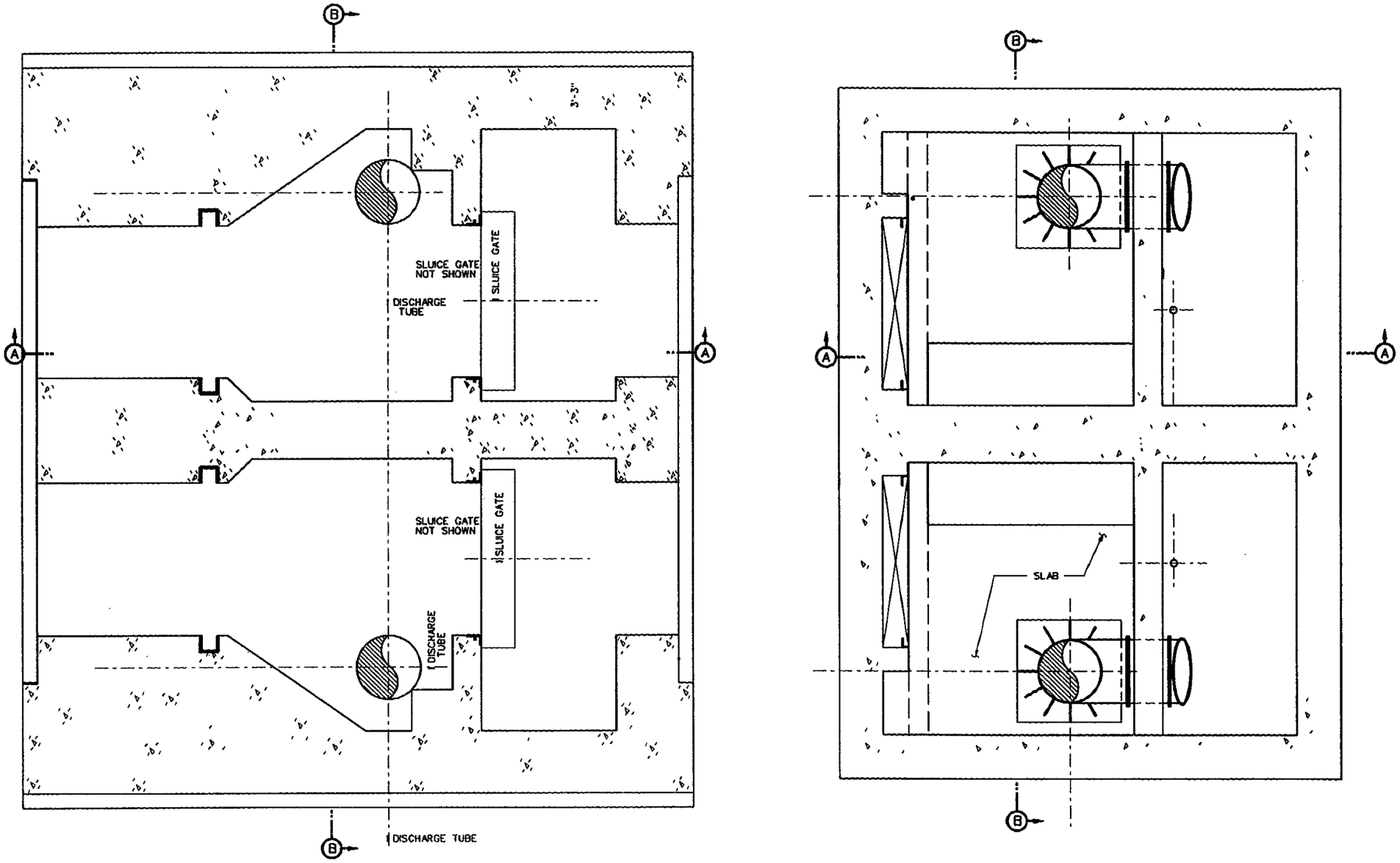


PLAN VIEWS: COMBINED GATEWELL/PUMP STATIONS

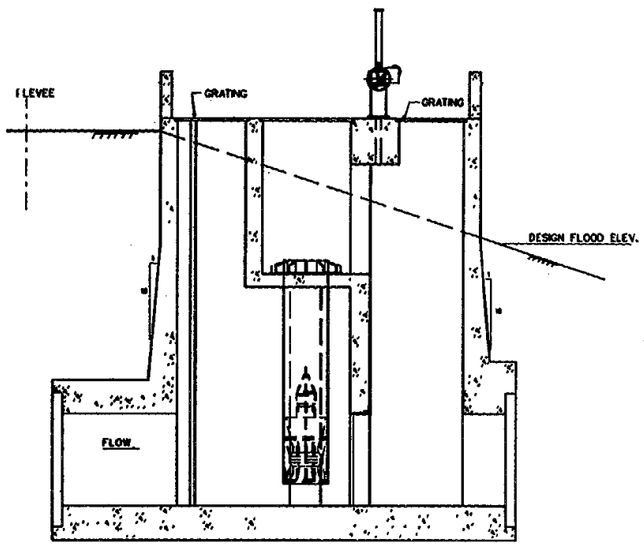


"FREE-FALL" DISCHARGE

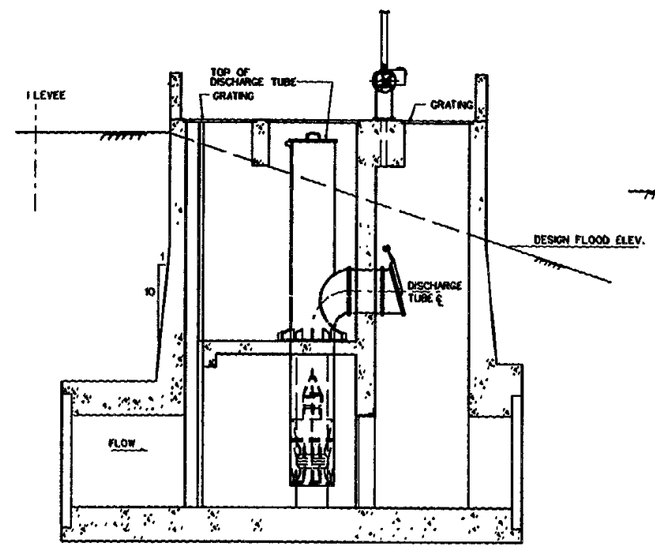


"FLAP GATE" DISCHARGE

SECTION A-A FROM PLATE G-7

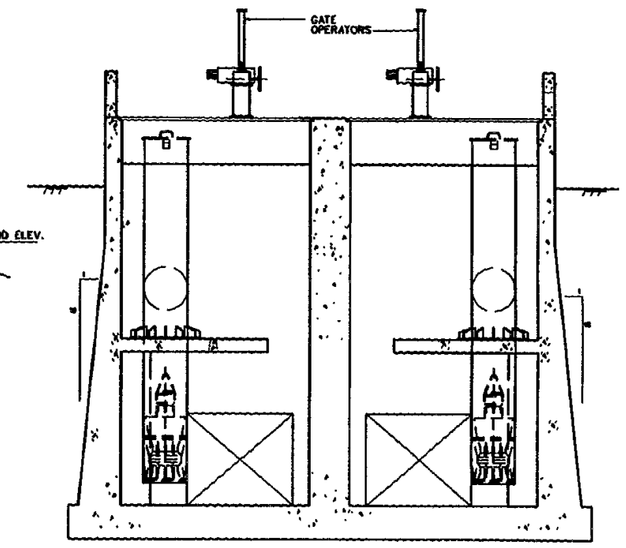


SECTION B-B FROM PLATE G-7

PROFILES: COMBINED GATEWELL/PUMP STATIONS

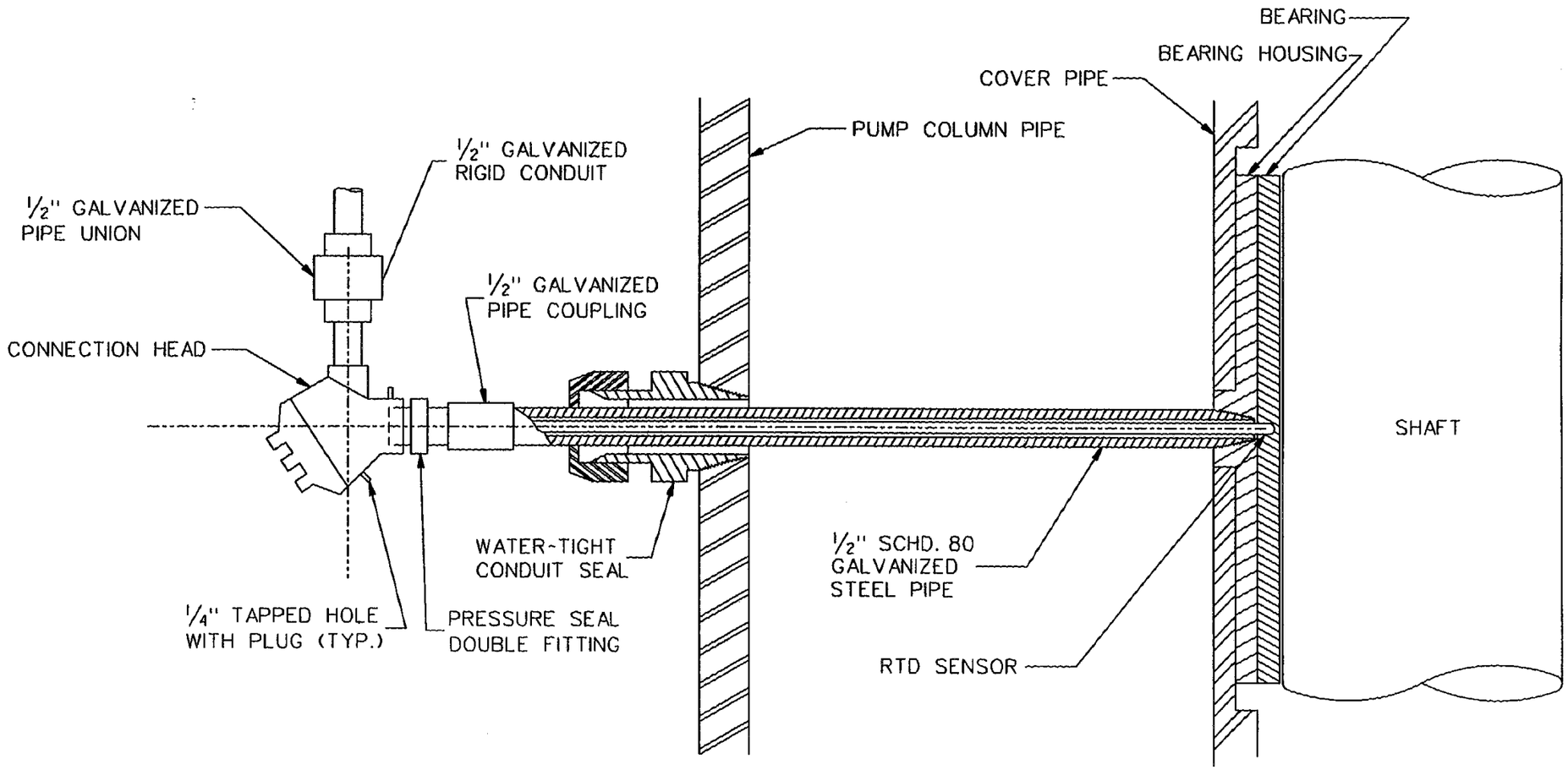


RTD INSTALLATION FOR VERTICAL WET PIT PUMPS

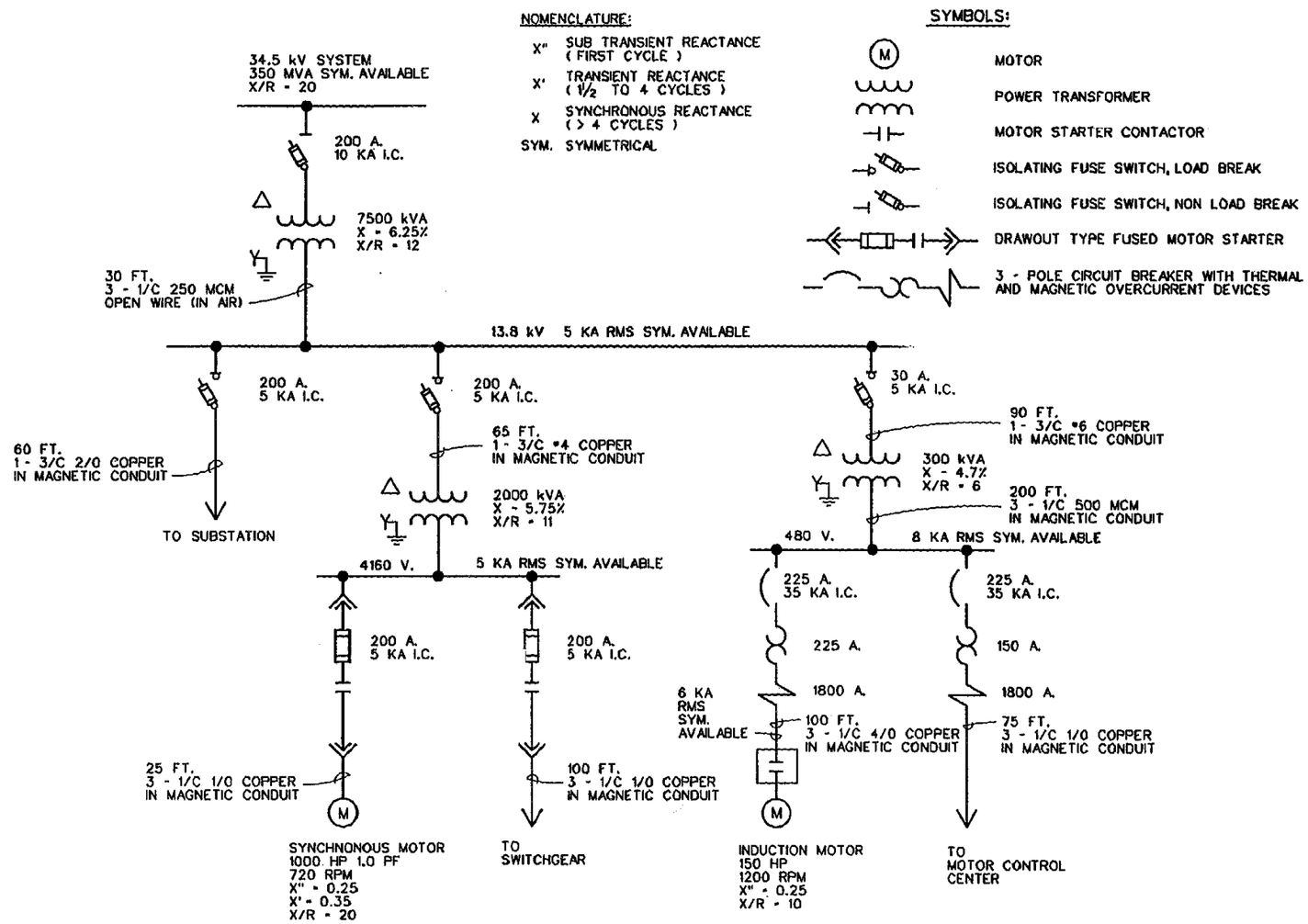


PUMPING STATION
ONE LINE DIAGRAM
FOR ELECTRICAL SYSTEM STUDIES

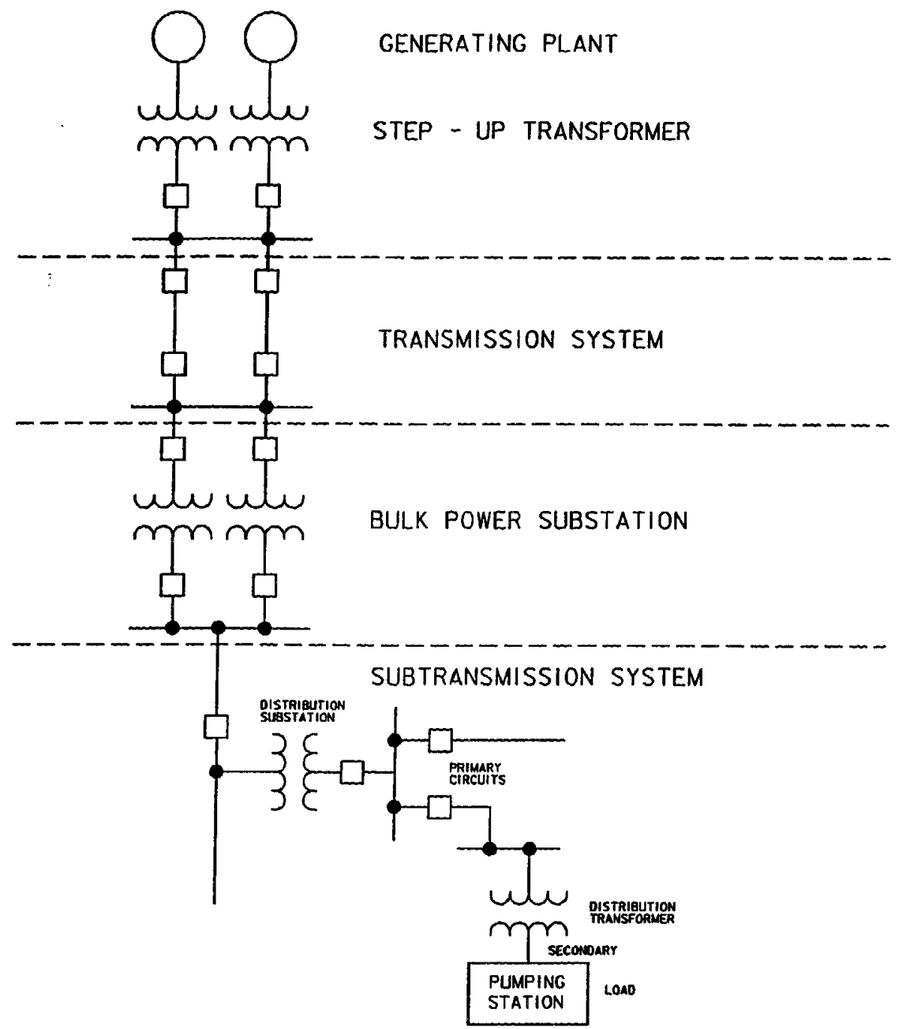


COMPONENTS OF AN ELECTRIC POWER SYSTEM

PUMPING STATION

POWER SUPPLY SYSTEM CONFIGURATIONS

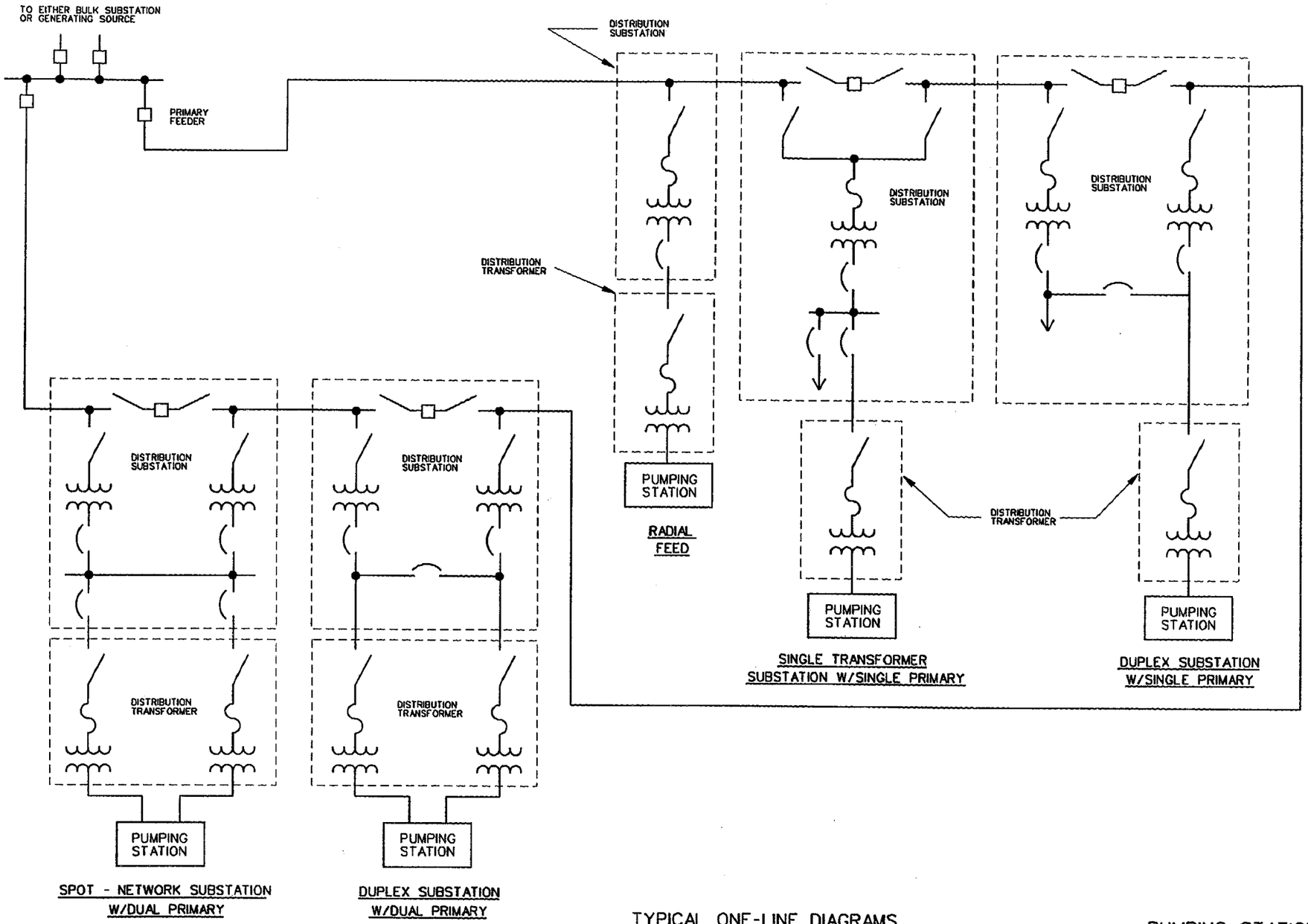


TYPICAL ONE-LINE DIAGRAMS
FOR DISTRIBUTION TYPE-SUBSTATIONS

PUMPING STATION
POWER SUPPLY SYSTEM CONFIGURATIONS

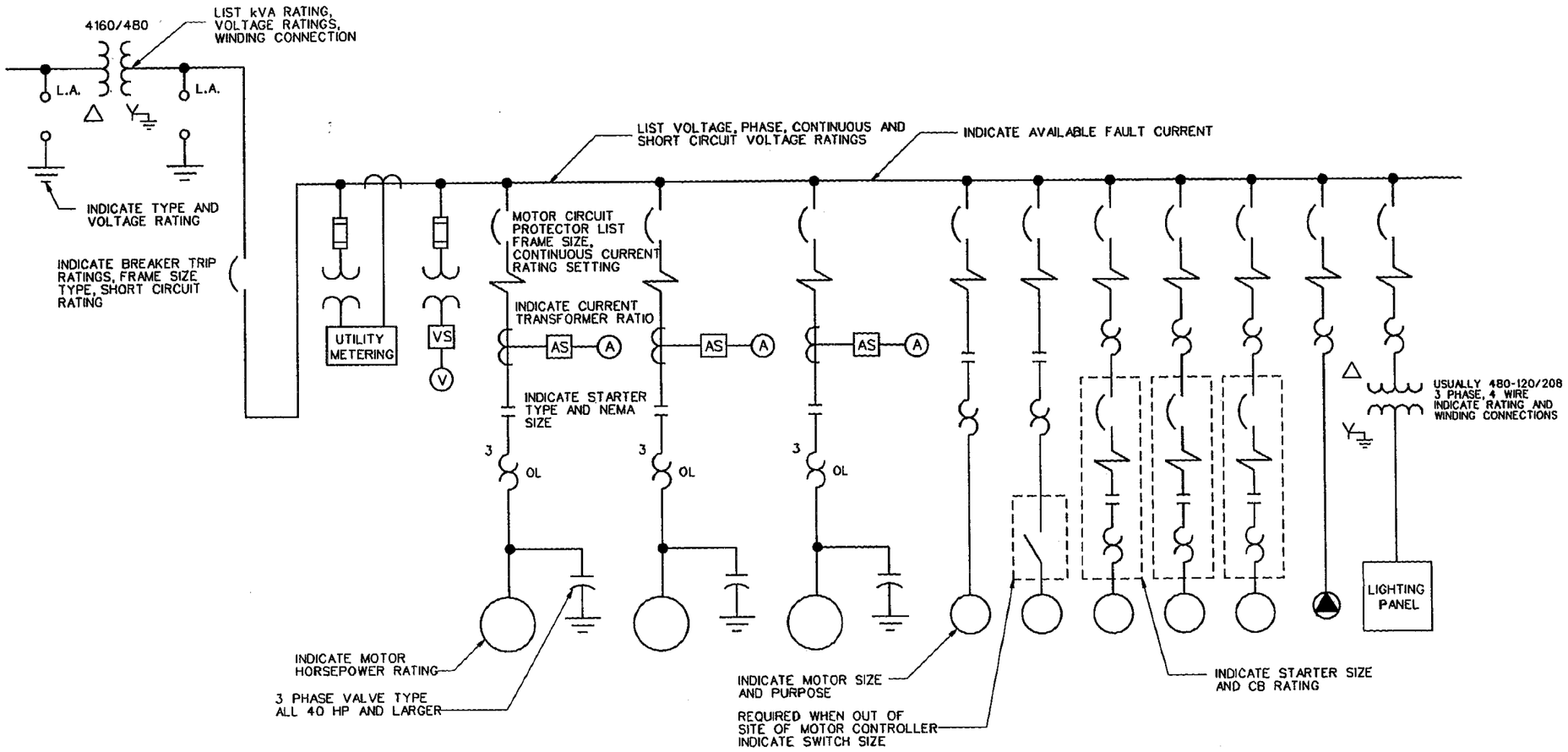


ONE LINE DIAGRAM

NO SCALE

PUMPING STATION

TYPICAL LOW VOLTAGE STATION ONE-LINE

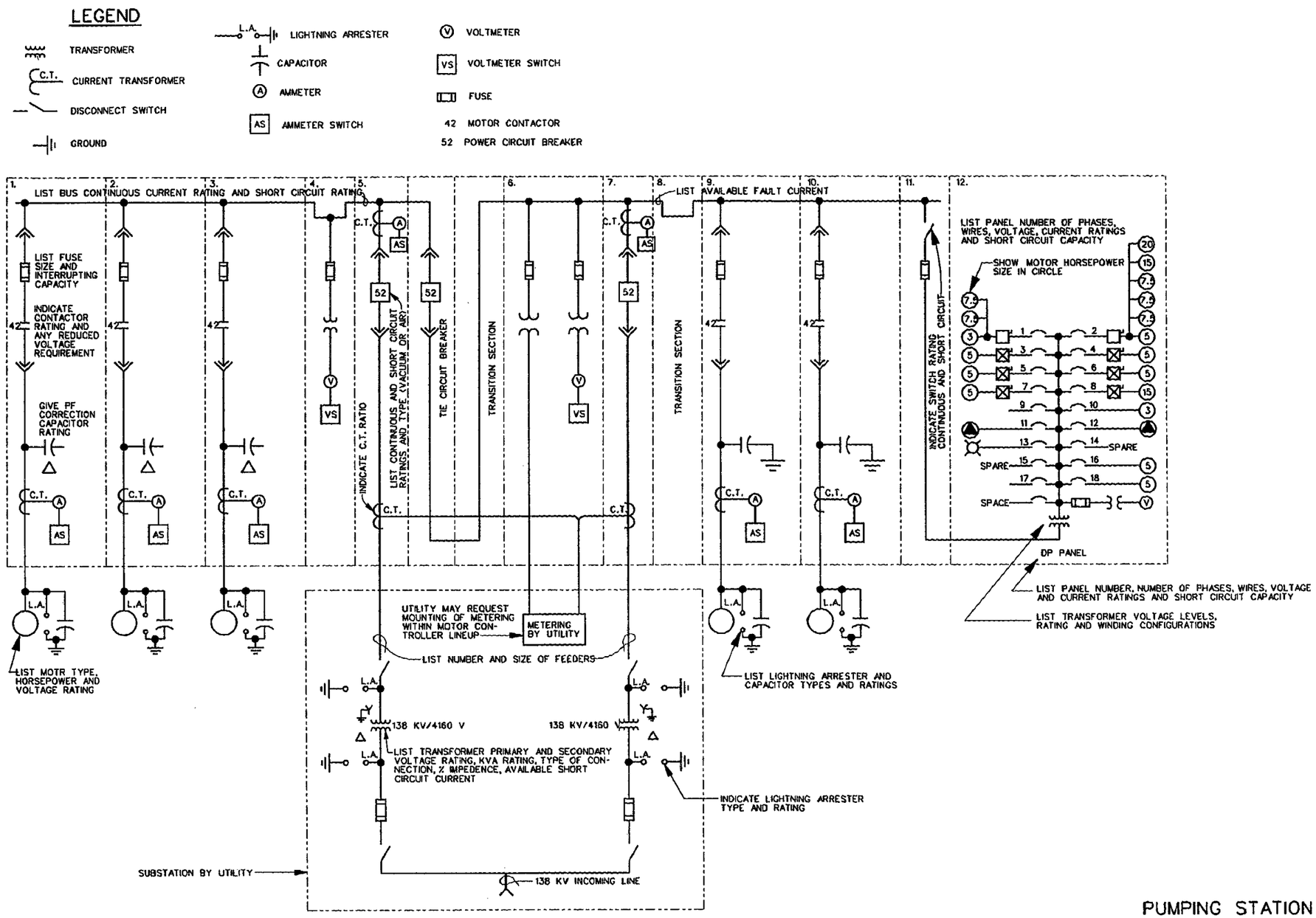


PUMPING STATION
TYPICAL MEDIUM VOLTAGE STATION ONE-LINE

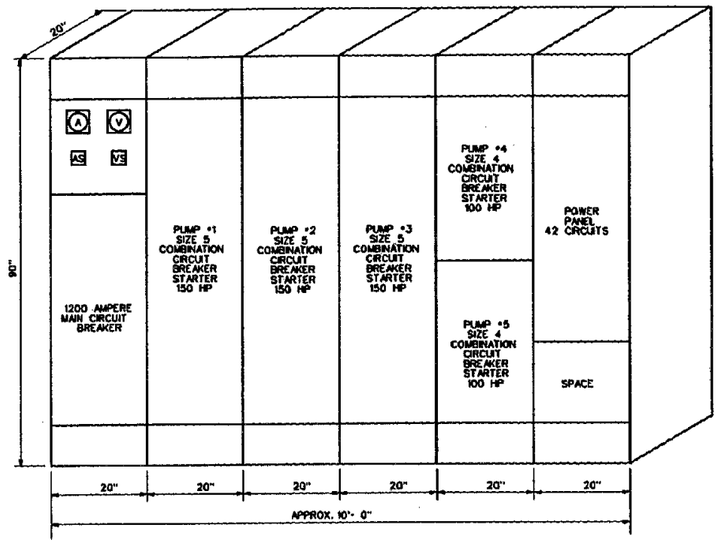


480 V. SWITCHGEAR - MOTOR CONTROL CENTER

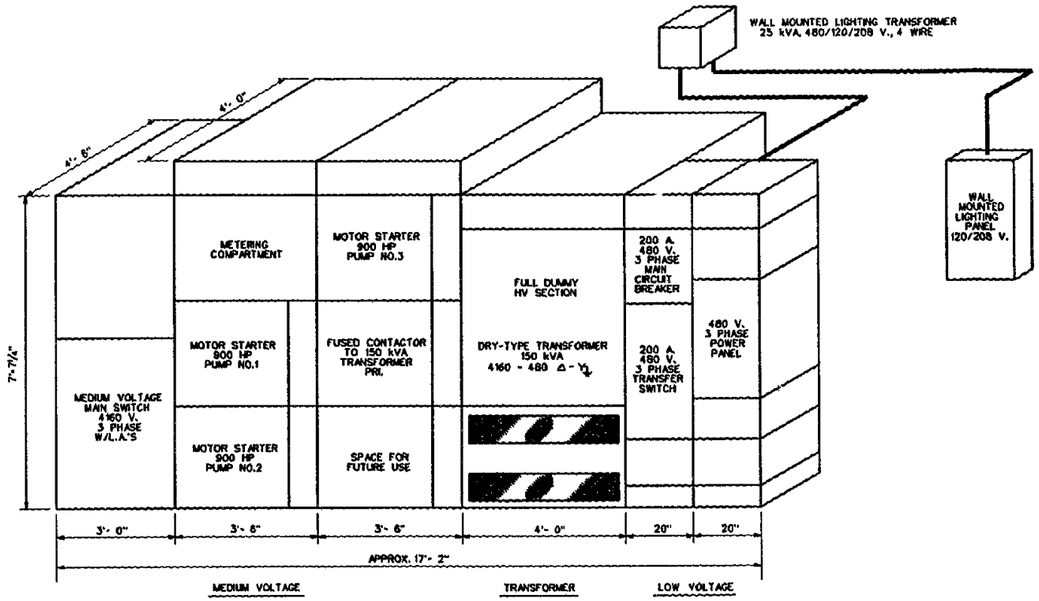


4160 VOLT MOTOR CONTROLLER LINEUP

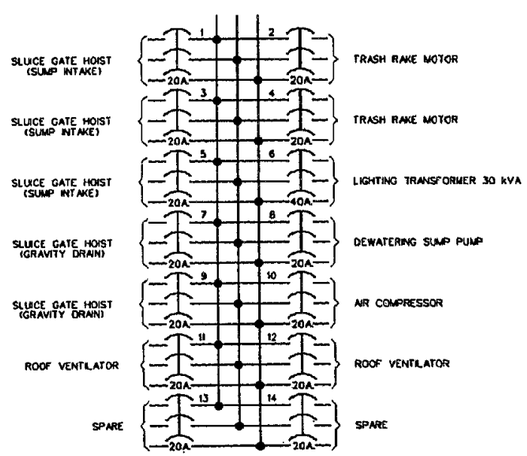


DISTRIBUTION POWER PANEL - DP1

480 VOLTS, 3 PHASE, 3 WIRE, 60 HERTZ

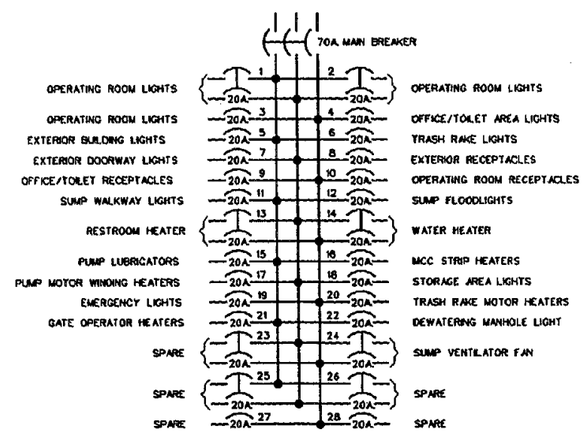


LIGHTING PANEL

120/208 VOLTS, 3 PHASE, 4 WIRE, 60 HERTZ

PUMPING STATION

TYPICAL CONTROLLER LINEUP
AND POWER & LIGHTING PANEL LAYOUTS

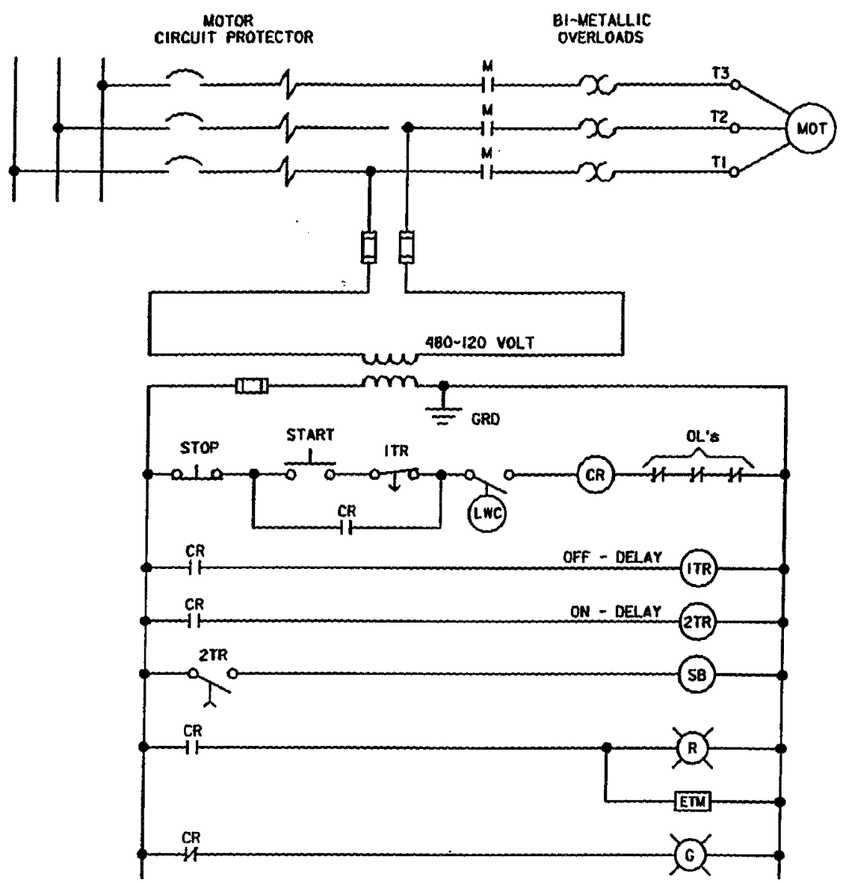


FULL VOLTAGE NON-REVERSING
CIRCUIT BREAKER TYPE

SYMBOLS:

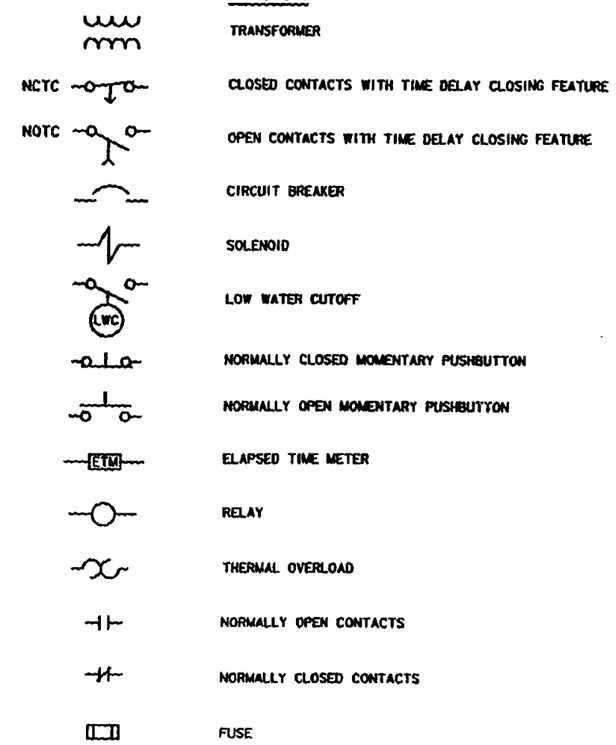


NOMENCLATURE:

| | |
|---|---|
| AT | AUTOTRANSFORMER |
| 1S,2S | STARTING CONTACTORS |
| GRD,GND | GROUND |
| R | RUN CONTACTOR |
| MOT | MOTOR |
| T1,T2,T3 | OUTGOING TERMINALS ON STARTER OR MOTOR |
| SB | SIPHON BREAKER |
| ETM | ELAPSED TIME METER |
| CR | CONTROL RELAY |
| TR | TIMING RELAY |
| 1TR | TIME DELAY RELAY (PREVENTS REENERGIZATION DURING BACKSPINNING) |
| 2TR | TIME DELAY RELAY (DELAYS CLOSING OF SIPHON BREAKER UNTIL SIPHON IS MADE) |

NOTE:

1. CONTROL SCHEMATIC SHOWN IS FOR OVER THE LEVEE TYPE DISCHARGE PIPING THAT REQUIRE SIPHON BREAKERS IN DISCHARGE LINES. FOR DISCHARGE CHAMBER TYPE STATIONS, DELETE RELAY TD2 AND SIPHON BREAKER RELAY SB.

PUMPING STATION
TYPICAL LOW VOLTAGE
MOTOR CONTROL SCHEMATIC

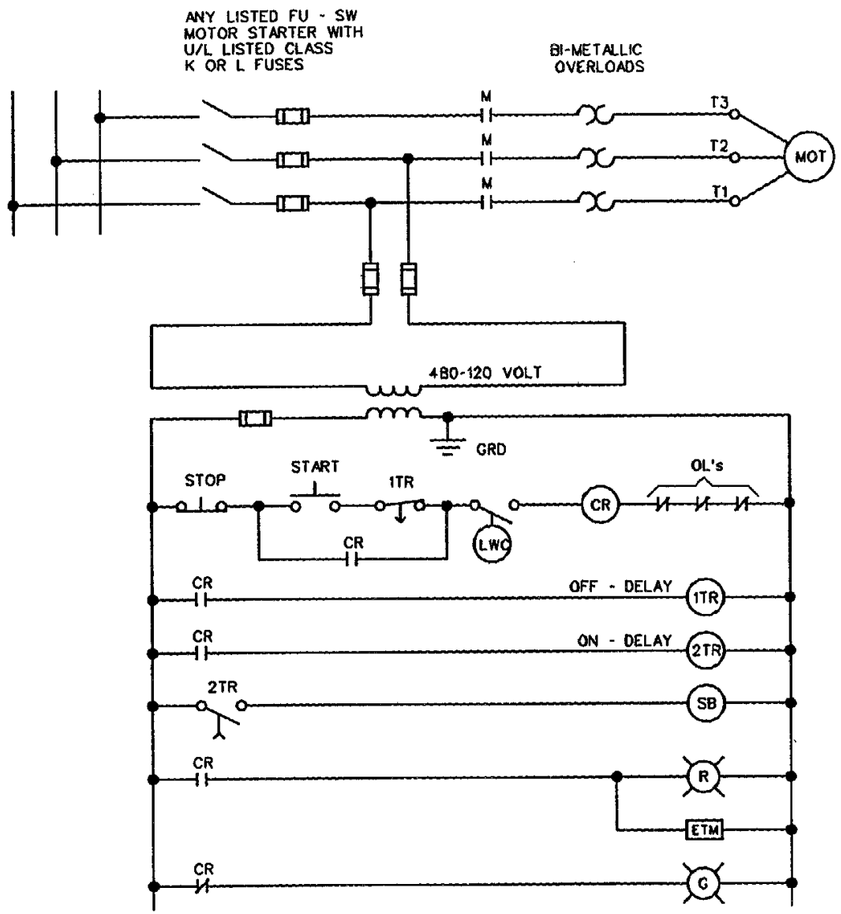


## FULL VOLTAGE NON-REVERSING
## FUSIBLE SWITCH TYPE

**SYMBOLS:**

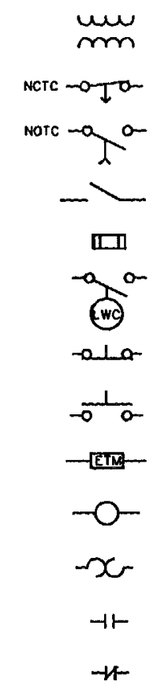


- CONTROL CIRCUIT TRANSFORMER
- CLOSED SWITCH WITH TIME DELAY CLOSING FEATURE
- OPEN SWITCH WITH TIME DELAY CLOSING FEATURE
- SWITCH
- FUSE
- LOW WATER CUTOFF
- NORMALLY CLOSED MOMENTARY PUSHBUTTON
- NORMALLY OPEN MOMENTARY PUSHBUTTON
- ELAPSED TIME METER
- RELAY
- THERMAL OVERLOAD
- NORMALLY OPEN CONTACTS
- NORMALLY CLOSED CONTACTS

**NOMENCLATURE:**

| | |
|---|---|
| AT | AUTOTRANSFORMER |
| 1S,2S | STARTING CONTACTORS |
| GRD | GROUND |
| R | RUN CONTACTOR |
| MOT | MOTOR |
| T1,T2,T3 | OUTGOING TERMINALS |
| SB | SIPHON BREAKER |
| ETM | ELAPSED TIME METER |
| CR | CONTROL RELAY |
| TR | TIMING RELAY |
| 1TR | TIME DELAY RELAY ( PREVENTS REENERGIZATION DURING BACKSPINNING ) |
| 2TR | TIME DELAY RELAY ( DELAYS CLOSING OF SIPHON BREAKER UNTIL SIPHON IS MADE ) |

**NOTE:**

1. CONTROL SCHEMATIC SHOWN IS FOR OVER THE LEVEE TYPE DISCHARGE PIPING THAT REQUIRE SIPHON BREAKERS IN DISCHARGE LINES. FOR DISCHARGE CHAMBER TYPE STATIONS, DELETE RELAY TD2 AND SIPHON BREAKER RELAY SB.

## PUMPING STATION
TYPICAL LOW VOLTAGE
MOTOR CONTROL SCHEMATIC

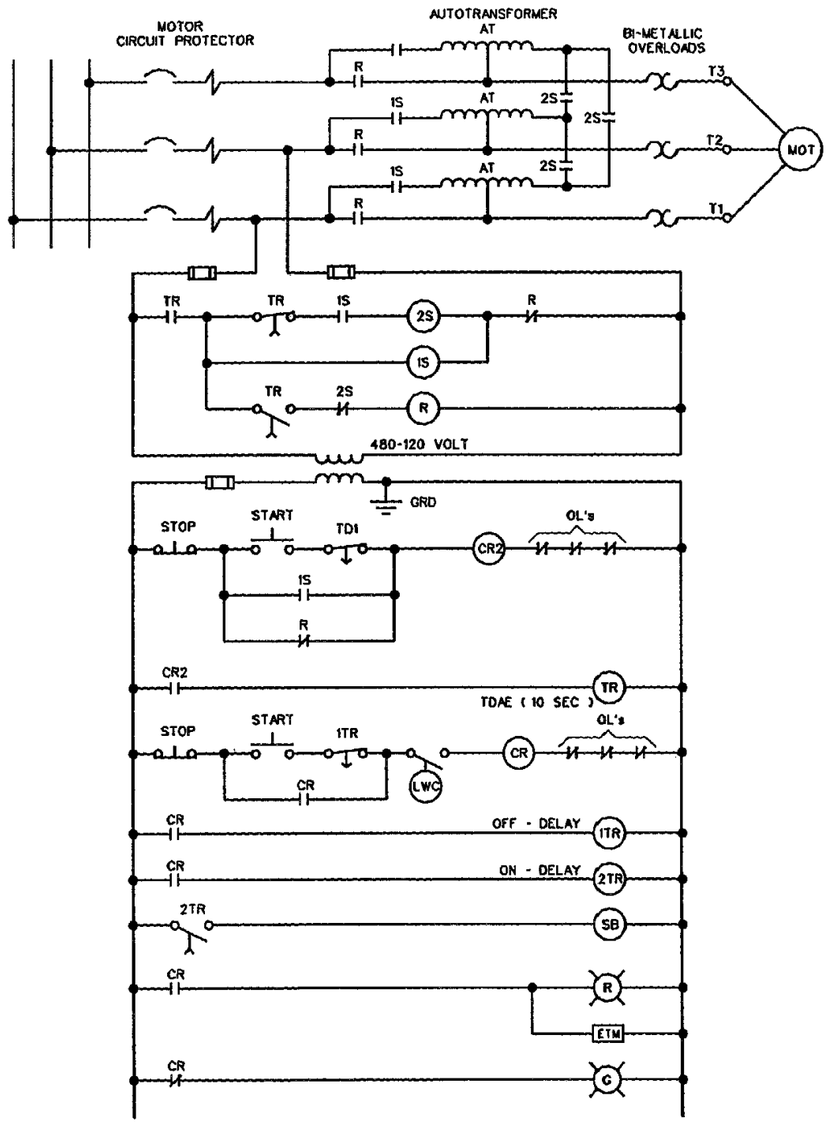


## REDUCED-VOLTAGE NON-REVERSING AUTOTRANSFORMER TYPE (CLOSED TRANSITION)

**SYMBOLS:**

| | |
|---|---|
| | TRANSFORMER |
| NCTO | CLOSED SWITCH WITH TIME DELAY OPENING FEATURE |
| NCTC | CLOSED SWITCH WITH TIME DELAY CLOSING FEATURE |
| NOTC | OPEN SWITCH WITH TIME DELAY CLOSING FEATURE |
| | CIRCUIT BREAKER |
| | SOLENOID |
| LWC | LOW WATER CUTOFF |
| | FUSE |
| | NORMALLY CLOSED MOMENTARY PUSHBUTTON |
| | NORMALLY OPEN MOMENTARY PUSHBUTTON |
| ETM | ELAPSED TIME METER |
| | RELAY |
| | THERMAL OVERLOAD |
| | NORMALLY OPEN CONTACTS |
| | NORMALLY CLOSED CONTACTS |
| | SWITCH |

**NOMENCLATURE:**

| | |
|---|---|
| AT | AUTOTRANSFORMER |
| 1S,2S | STARTING CONTACTORS |
| GRD | GROUND |
| R | RUN CONTACTOR |
| MOT | MOTOR |
| T1,T2,T3 | OUTGOING TERMINALS |
| SB | SIPHON BREAKER |
| ETM | ELAPSED TIME METER |
| CR | CONTROL RELAY |
| TR | TIMING RELAY |
| 1TR | TIME DELAY RELAY ( PREVENTS REENERGIZATION DURING BACKSPINNING ) |
| 2TR | TIME DELAY RELAY ( DELAYS CLOSING OF SIPHON BREAKER UNTIL SIPHON IS MADE ) |

**NOTE:**

1. CONTROL SCHEMATIC SHOWN IS FOR OVER THE LEVEE TYPE DISCHARGE PIPING THAT REQUIRE SIPHON BREAKERS IN DISCHARGE LINES. FOR DISCHARGE CHAMBER TYPE STATIONS, DELETE RELAY TD2 AND SIPHON BREAKER RELAY SB.

## PUMPING STATION

TYPICAL LOW VOLTAGE
MOTOR CONTROL SCHEMATIC

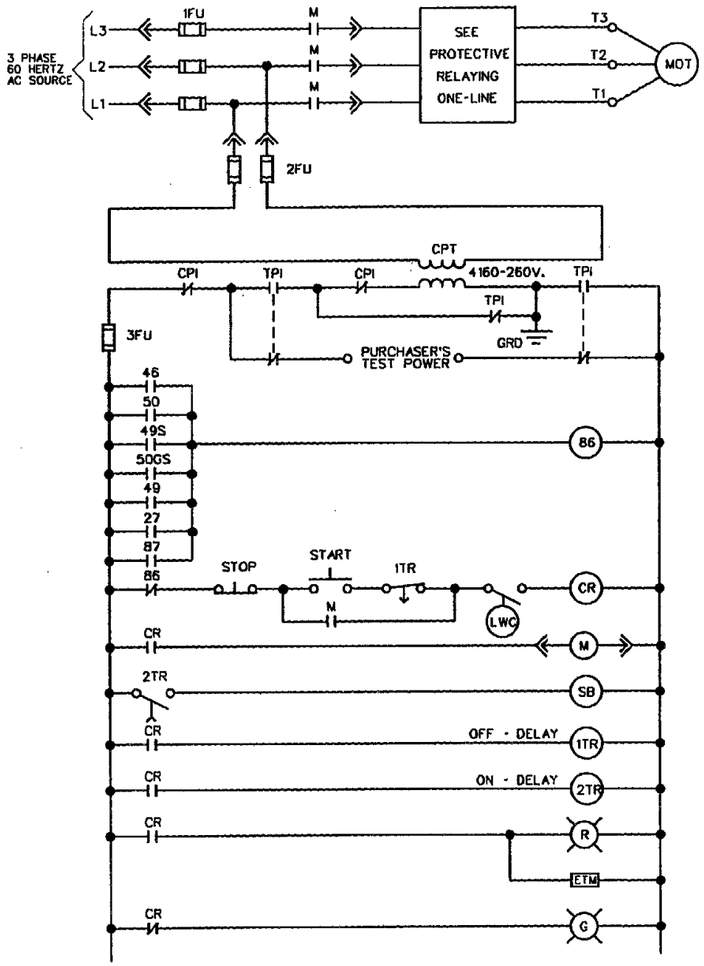


TYPICAL INDUCTION - MOTOR CONTROL
FULL VOLTAGE NON-REVERSING RELAY LOGIC

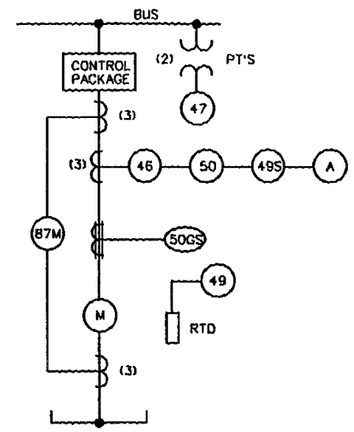


TYPICAL ONE-LINE PROTECTIVE RELAYING
FULL-VOLTAGE NON-REVERSING INDUCTION MOTOR

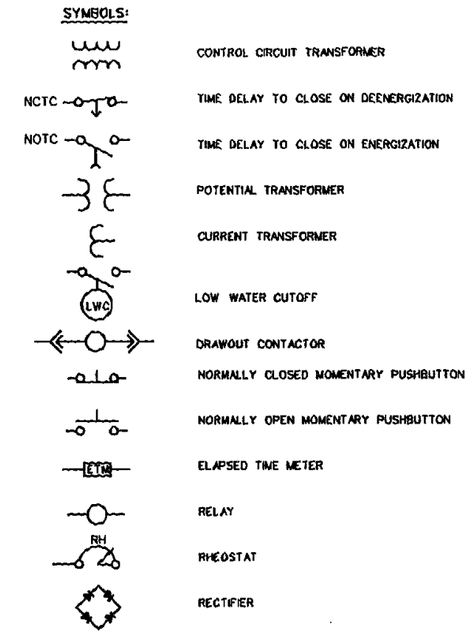


NOMENCLATURE:

| | |
|---|---|
| CPI | CONTROL POWER INTERLOCK |
| 1,2,3, CT | CURRENT TRANSFORMER |
| 1,2,3, FU | FUSE |
| GRD | GROUND |
| M | LINE CONTACTOR |
| MOT | MOTOR |
| CPT | CONTROL POWER TRANSFORMER |
| TPI | TEST POWER INTERLOCK |
| L1,L2,L3 | INCOMING TERMINALS |
| T1,T2,T3 | OUTGOING TERMINALS |
| A | AMMETER |
| SB | SIPHON BREAKER |
| 1TR | TIME DELAY RELAY ( PREVENTS REENERGIZATION DURING BACKSPINNING ) |
| 2TR | TIME DELAY RELAY ( DELAYS CLOSING OF SIPHON BREAKER UNTIL SIPHON IS MADE ) |
| ETM | ELAPSED TIME METER |
| CR | CONTROL RELAY |

DEVICE NUMBERS:

| | |
|---|---|
| 26 | APPARATUS THERMAL DEVICE |
| 27 | UNDERVOLTAGE |
| 46 | CURRENT BALANCE |
| 48 | INCOMPLETE SEQUENCE TIMER REDUCED VOLTAGE STARTING |
| 49 | THERMAL |
| 49S | THERMAL (STALLED) |
| 50 | INSTANTANEOUS SHORT CIRCUIT |
| 50GS | INSTANTANEOUS GROUND SENSOR |
| 55 | POWER FACTOR PULLOUT |
| 86 | MOTOR TRIP AND LOCKOUT |
| 87M | MOTOR DIFFERENTIAL |

NOTE:

1. CONTROL SCHEMATIC SHOWN IS FOR OVER THE LEVEE TYPE DISCHARGE PIPING THAT REQUIRE SIPHON BREAKERS IN DISCHARGE LINES. FOR DISCHARGE CHAMBER TYPE STATIONS, DELETE RELAY TD2 AND SIPHON BREAKER RELAY SB.

PUMPING STATION

TYPICAL MEDIUM VOLTAGE FULL - VOLTAGE
INDUCTION NON - REVERSING CONTROL SCHEMATIC
RELAY LOGIC

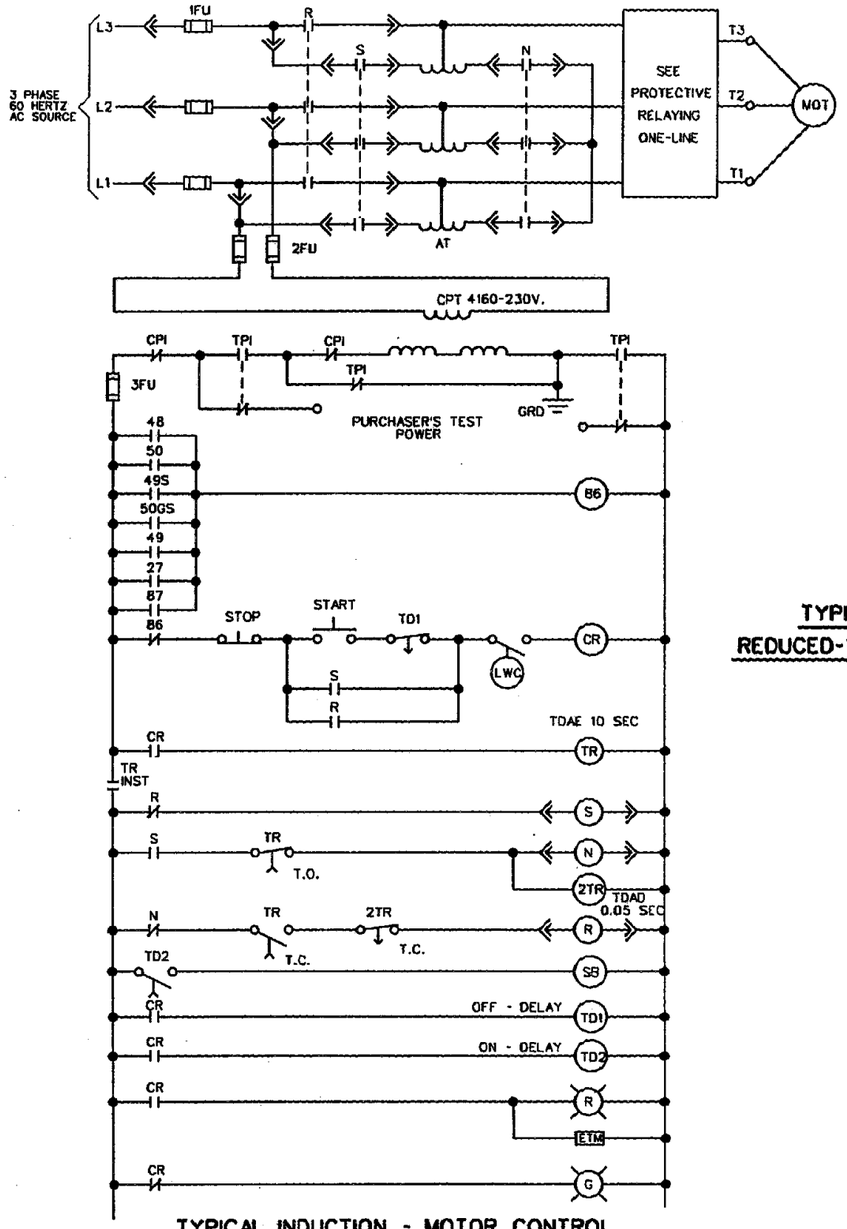


TYPICAL INDUCTION - MOTOR CONTROL

AUTOTRANSFORMER REDUCED-VOLTAGE NON-REVERSING RELAY LOGIC

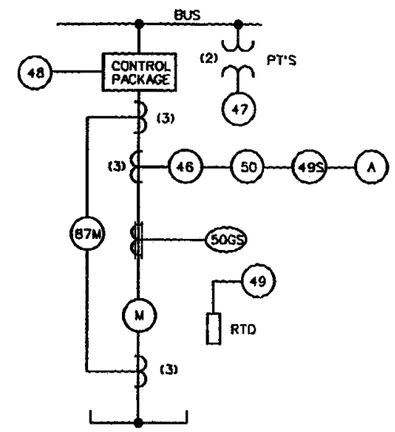


TYPICAL ONE-LINE PROTECTIVE RELAYING

REDUCED-VOLTAGE NON-REVERSING INDUCTION MOTOR

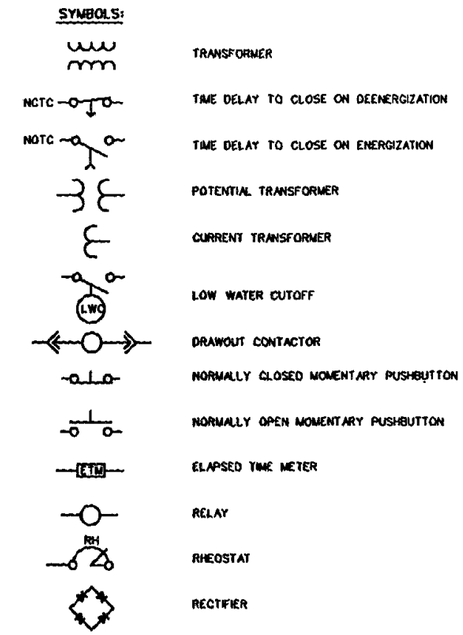


NOMENCLATURE:

| | | | |
|---|---|---|---|
| CPI | CONTROL POWER INTERLOCK | TD1 | TIME DELAY RELAY ( PREVENTS REENERGIZATION DURING BACKSPINNING ) |
| 1,2,3, CT | CURRENT TRANSFORMER | TD2 | TIME DELAY RELAY ( DELAYS CLOSING OF SIPHON BREAKER UNTIL SIPHON IS MADE ) |
| 1,2,3, FU | FUSE | ETM | ELAPSED TIME METER |
| GRD | GROUND | CR | CONTROL RELAY |
| M | LINE CONTACTOR | S | STARTING CONTACTOR |
| MOT | MOTOR | R | RUN CONTACTOR |
| CPT | CONTROL POWER TRANSFORMER | N | NEUTRAL |
| TPI | TEST POWER INTERLOCK | TR | TIMING RELAY FOR REDUCED VOLTAGE |
| L1,L2,L3 | INCOMING TERMINALS | 2TR | TRANSITION TIMER |
| T1,T2,T3 | OUTGOING TERMINALS | | |
| A | AMMETER | | |
| SB | SIPHON BREAKER | | |

DEVICE NUMBERS:

| | |
|---|---|
| 26 | APPARATUS THERMAL DEVICE |
| 27 | UNDERVOLTAGE |
| 46 | CURRENT BALANCE |
| 48 | INCOMPLETE SEQUENCE TIMER REDUCED VOLTAGE STARTING |
| 49 | THERMAL |
| 49S | THERMAL (STALLED) |
| 50 | INSTANTANEOUS SHORT CIRCUIT |
| 50GS | INSTANTANEOUS GROUND SENSOR |
| 55 | POWER FACTOR PULLOUT |
| 86 | MOTOR TRIP AND LOCKOUT |
| 87M | MOTOR DIFFERENTIAL |

NOTE:

1. CONTROL SCHEMATIC SHOWN IS FOR OVER THE LEVEE TYPE DISCHARGE PIPING THAT REQUIRE SIPHON BREAKERS IN DISCHARGE LINES. FOR DISCHARGE CHAMBER TYPE STATIONS, DELETE RELAY TD2 AND SIPHON BREAKER RELAY SB.

PUMPING STATION

TYPICAL MEDIUM VOLTAGE REDUCED - VOLTAGE INDUCTION NON - REVERSING CONTROL SCHEMATIC RELAY LOGIC

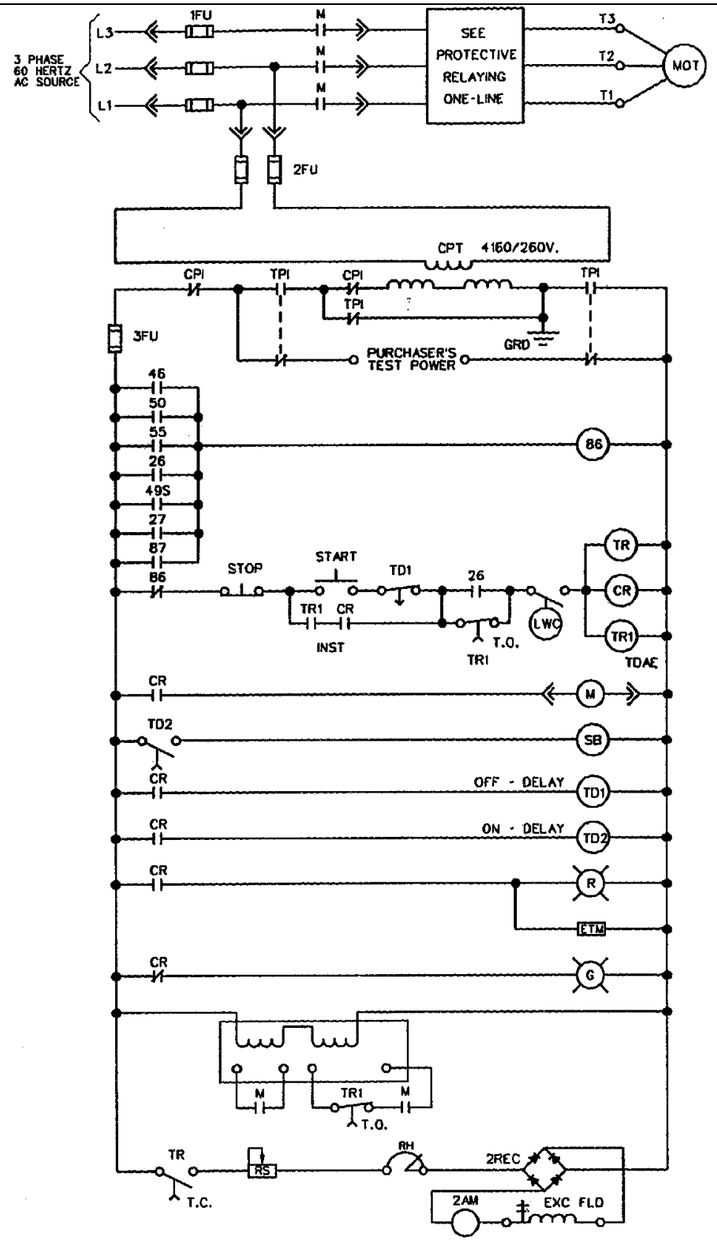


TYPICAL BRUSHLESS SYNCHRONOUS - MOTOR CONTROL
FULL VOLTAGE NON-REVERSING RELAY LOGIC

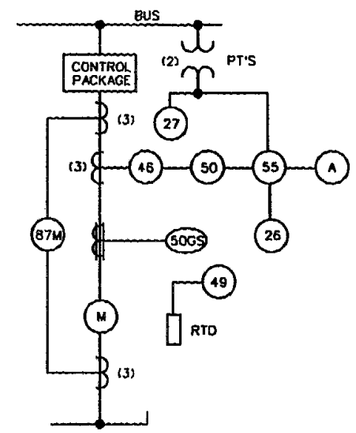


TYPICAL ONE-LINE PROTECTIVE RELAYING
FULL-VOLTAGE NON-REVERSING SYNCHRONOUS MOTOR

SYMBOLS:

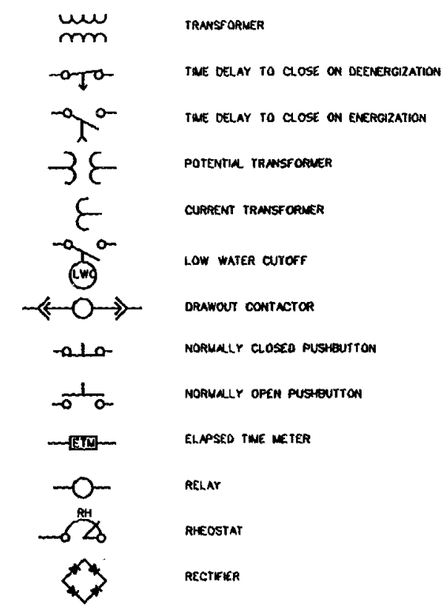


NOMENCLATURE:

| | | | |
|---|---|---|---|
| CPI | CONTROL POWER INTERLOCK | TD1 | TIME DELAY RELAY ( PREVENTS REENERGIZATION DURING BACKSPINNING ) |
| 1,2,3, CT | CURRENT TRANSFORMER | TD2 | TIME DELAY RELAY ( DELAYS CLOSING OF SIPHON BREAKER UNTIL SIPHON IS MADE ) |
| 1,2,3, FU | FUSE | ETM | ELAPSED TIME METER |
| GRD | GROUND | CR | CONTROL RELAY |
| M | LINE CONTACTOR | 2AM | Dc AMMETER |
| MOT | MOTOR | EXC FLD | EXCITER FIELD |
| CPT | CONTROL POWER TRANSFORMER | TR | FIELD - APPLYING TIMER |
| TPI | TEST POWER INTERLOCK | RH | EXCITER FIELD RHEOSTAT |
| L1,L2,L3 | INCOMING TERMINALS | TR1 | PULLOUT PROTECTION APPLYING TIMER |
| T1,T2,T3 | OUTGOING TERMINALS | | |
| A | AMMETER | | |
| SB | SIPHON BREAKER | | |

DEVICE NUMBERS:

| | |
|---|---|
| 26 | APPARATUS THERMAL DEVICE |
| 27 | UNDERVOLTAGE |
| 46 | CURRENT BALANCE |
| 48 | INCOMPLETE SEQUENCE TIMER REDUCED VOLTAGE STARTING |
| 49 | THERMAL |
| 49S | THERMAL (STALLED) |
| 50 | INSTANTANEOUS SHORT CIRCUIT |
| 50GS | INSTANTANEOUS GROUND SENSOR |
| 55 | POWER FACTOR PULLOUT |
| 86 | MOTOR TRIP AND LOCKOUT |
| 87M | MOTOR DIFFERENTIAL |

NOTE:

1. CONTROL SCHEMATIC SHOWN IS FOR OVER THE LEVEE TYPE DISCHARGE PIPING THAT REQUIRE SIPHON BREAKERS IN DISCHARGE LINES. FOR DISCHARGE CHAMBER TYPE STATIONS, DELETE RELAY TD2 AND SIPHON BREAKER RELAY SB.

PUMPING STATION

TYPICAL MEDIUM VOLTAGE FULL - VOLTAGE
BRUSHLESS SYNCHRONOUS NON - REVERSING
CONTROL SCHEMATIC RELAY LOGIC

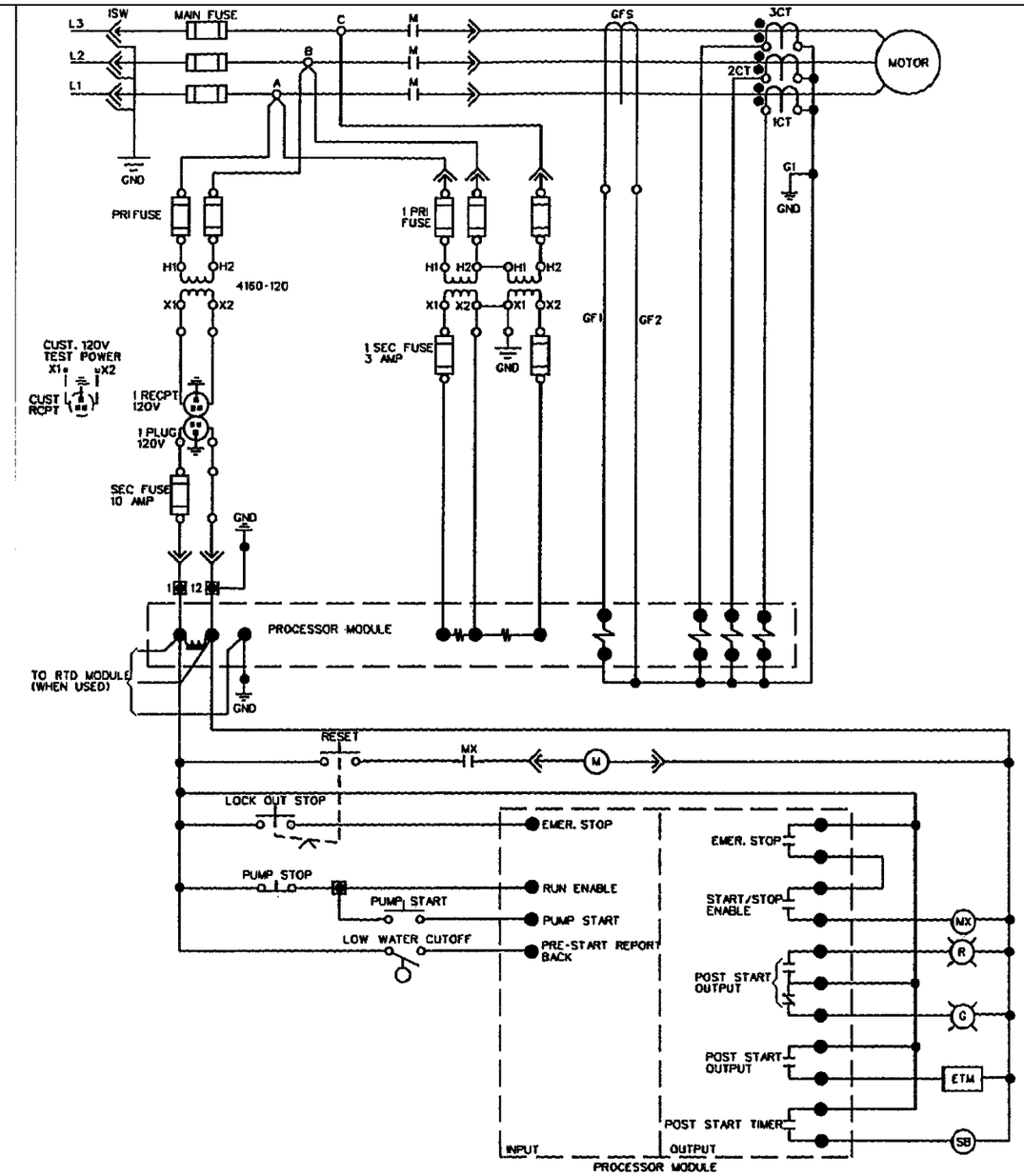


TYPICAL REVERSING MOTOR CONTROL FULL VOLTAGE NON-REVERSING MICROPROCESSOR PROTECTION PACKAGE

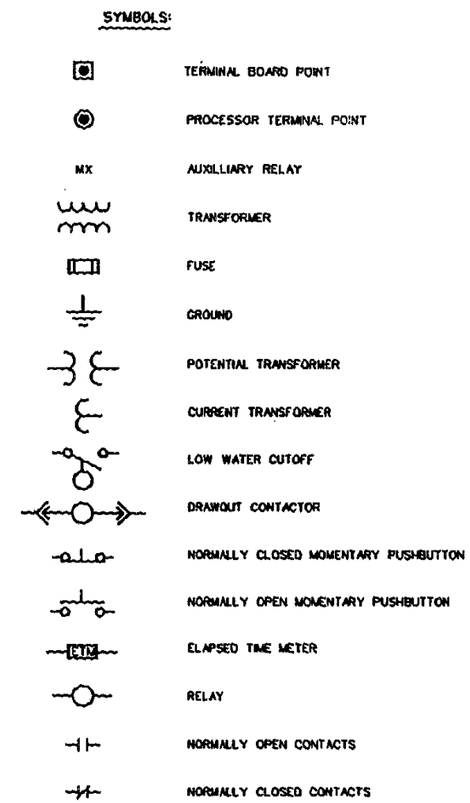


PUMPING STATION

TYPICAL MEDIUM VOLTAGE FULL VOLTAGE INDUCTION NON-REVERSING CONTROL SCHEMATIC MICROPROCESSOR -BASED PROTECTIVE LOGIC

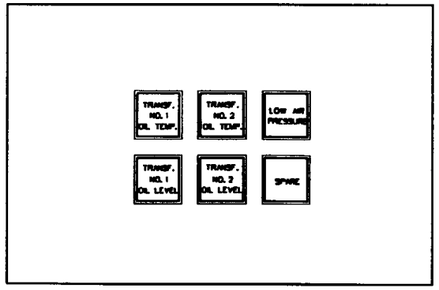


PANEL - B

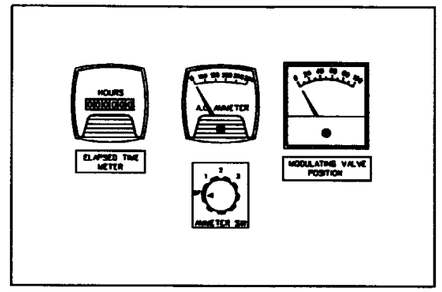


PANEL - B

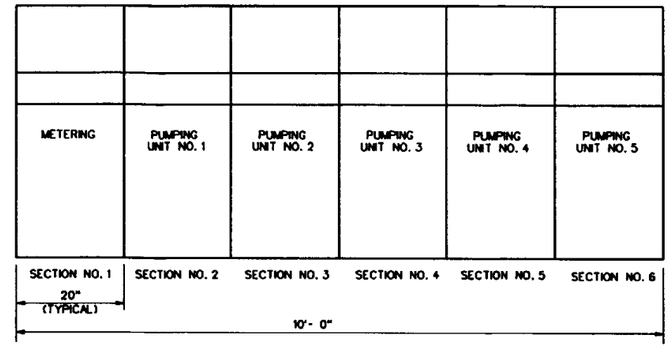


FRONT VIEW

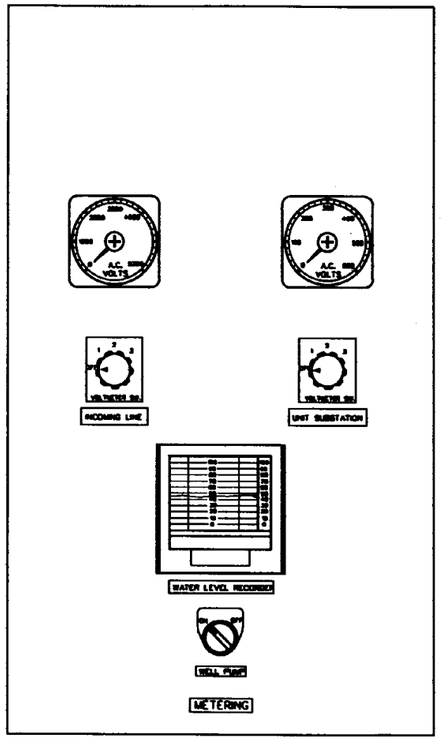


PANEL - A

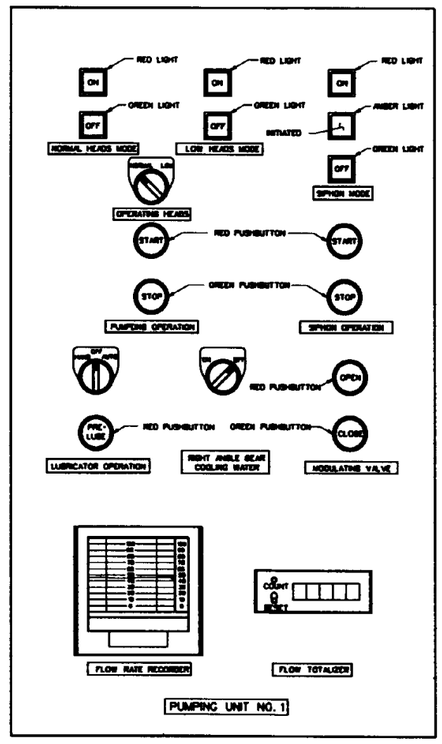


PANEL - A

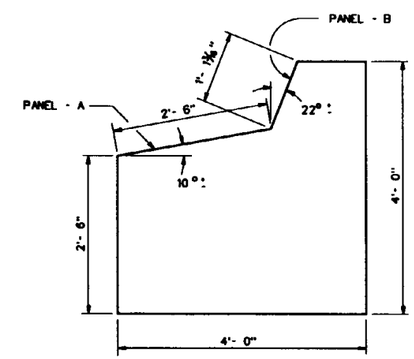


END VIEW

CONTROL CONSOLE

NO SCALE

PUMPING STATION

TYPICAL REMOTE CONTROL CONSOLE

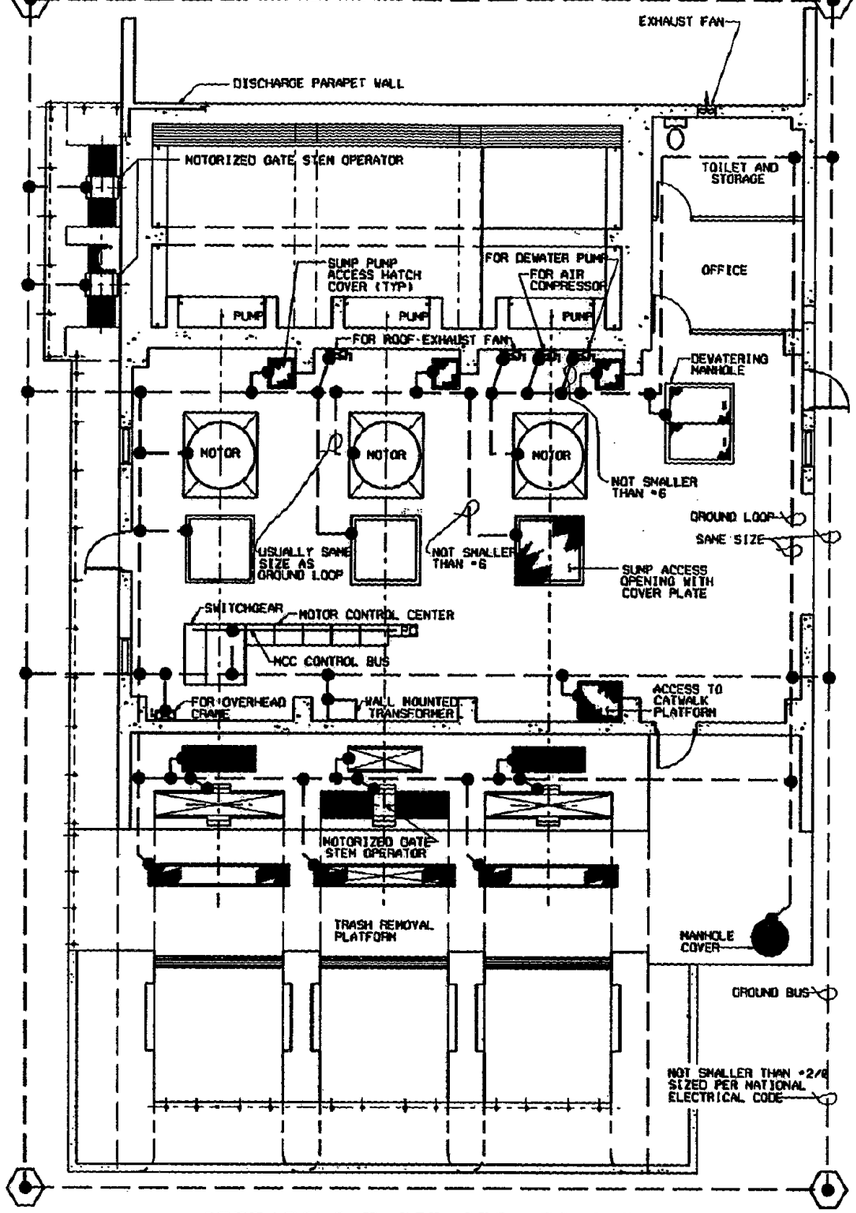


OPERATING FLOOR GROUNDING PLAN

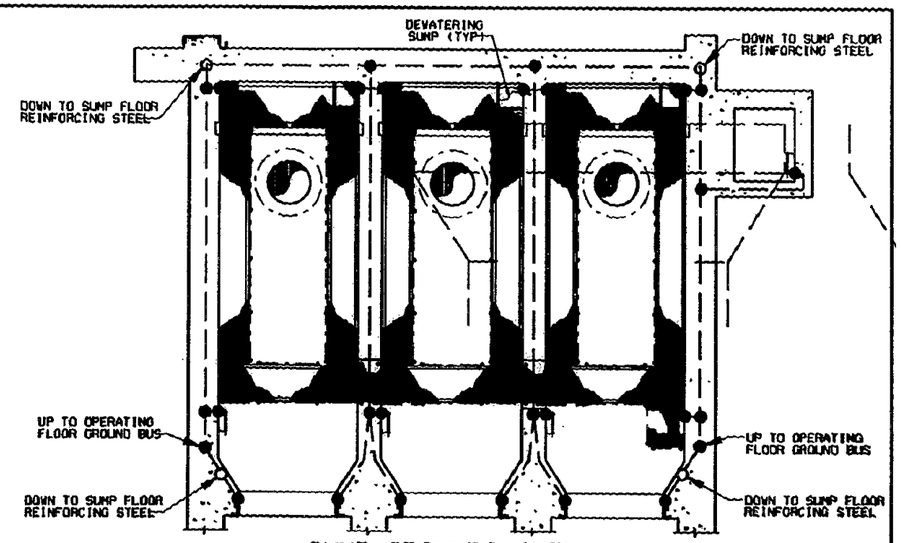


SUMP GROUNDING PLAN

TYPICAL NOTES:

1. ADDITIONAL LENGHTS OR NUMBERS OF GROUND RODS SHALL BE ADDED AS REQUIRED TO ACHIEVE A MAXIMUM RESISTANCE TO GROUND OF 25 OHMS.
2. GROUND BUS SHALL BE EXOTHERMICALLY WELDED TO THE SUMP FLOOR REBARS, ANY METAL FRAMEWORK OF THE BUILDING AND METALLIC UNDERGROUND WATER PIPE IF PRESENT.
3. THE FRAMES OF ALL STATIONARY OR PERMANENTLY LOCATED MOTORS, STATIC EQUIPMENT OR MOTOR CONTROLLERS SHALL BE GROUNDED BY CONNECTION TO THE GROUND LOOP BY AN EQUIPMENT GROUNDING CODUCTOR EQUAL IN SIZE TO THE LARGEST CONDUCTOR IN THE LINE CONNECTED TO THE EQUIPMENT BUT NOT LESSTHAN NO. 6 AWG.

PUMPING STATION

TYPICAL GROUNDING PLAN
UTILIZING DRIVEN ELECTRODES

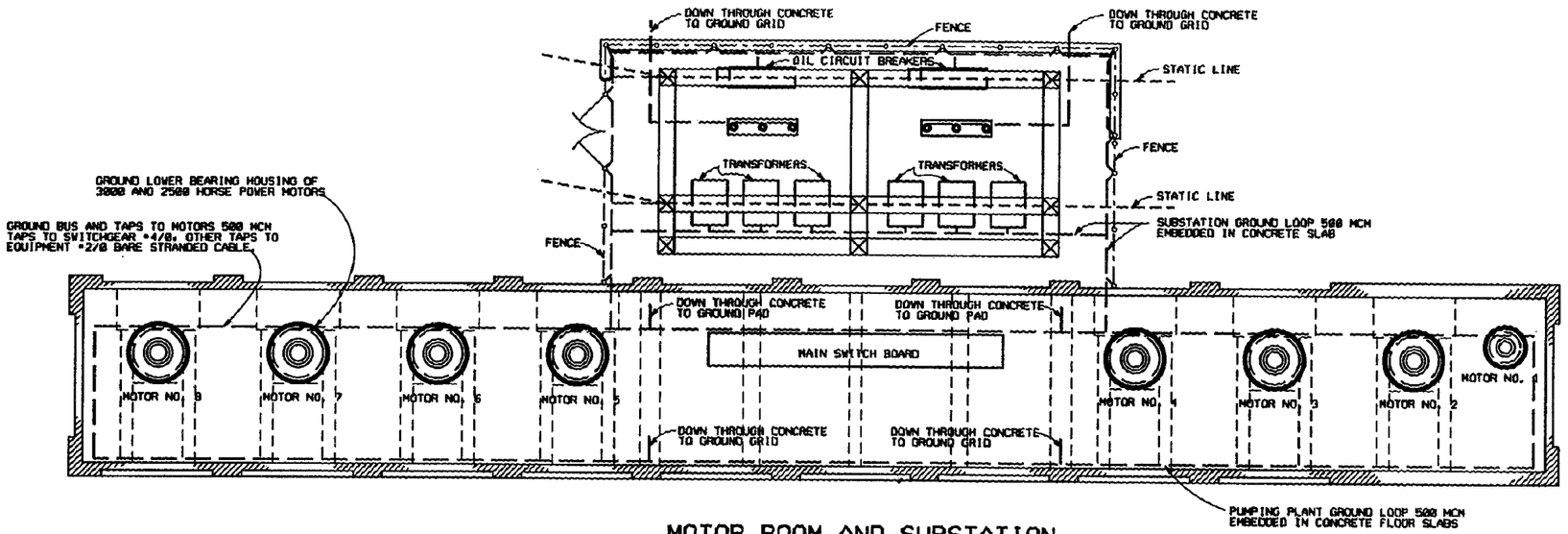


MOTOR ROOM AND SUBSTATION
GROUND LOOPS

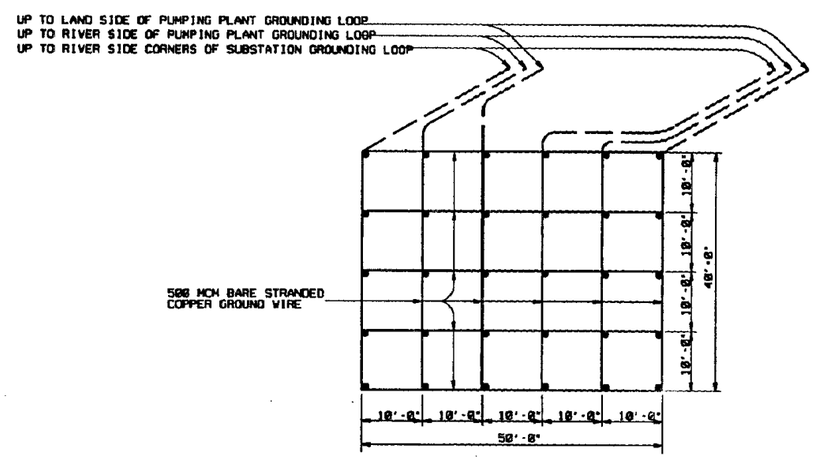


GROUNDING PAD

NOTE: BECAUSE OF SPACE LIMITATIONS 10'- 0" SPACING OF RODS WAS USED. A 20'- 0" SPACING WOULD GIVE MAXIMUM EFFECTIVENESS.

GENERAL NOTES:

1. LOCATE GROUND GRID IN AREA OF PERMANENTLY MOIST SOIL. PADS SHOULD HAVE A MINIMUM OF 12 INCHES OF CONCRETE COVER. THE GROUND GRID BOUNDARY SHOULD BE INDICATED BY ABOVE GROUND MARKERS AND PROTECTED AGAINST WASHOUTS OR DISTURBANCES RESULTING FROM FUTURE CONSTRUCTION.
2. ALL EQUIPMENT FRAMES AND HOUSINGS, METAL CABINETS INCLOSING ELECTRICAL EQUIPMENT AND METAL CONDUITS SHOULD BE CONNECTED TO GROUNDING SYSTEM.
3. THE CONTACT AREA OF ALL JOINTS IN GROUNDING CIRCUIT SHOULD PROVIDE A CURRENT CARRYING CAPACITY AT LEAST EQUAL TO THAT OF THE CONNECTING WIRE OR CABLE. ALL TERMINAL LUGS SHOULD BE OF THE SOLDERLESS TYPE AND SECURELY CONNECTED TO THE EQUIPMENT.
4. IN ADDITION TO SOLDERLESS CONNECTORS, GROUND CONNECTIONS AND SPLICES, WHICH WILL BE CONCEALED UPON COMPLETION OF WORK, SHOULD BE EXOTHERMICALLY WELDED.
5. GROUND CABLE WHERE EMBEDDED IN CONCRETE SHOULD BE COVERED WITH WATERPROOF CORRUGATED PAPER OR SIMILAR MATERIAL TO PROTECT THE CABLE DURING PLACEMENT AND VIBRATING OF THE CONCRETE.
6. MAXIMUM RESISTANCE TO GROUND NOT TO EXCEED 25 OHMS.

PUMPING STATION
TYPICAL GROUNDING PLAN
UTILIZING GROUND GRID

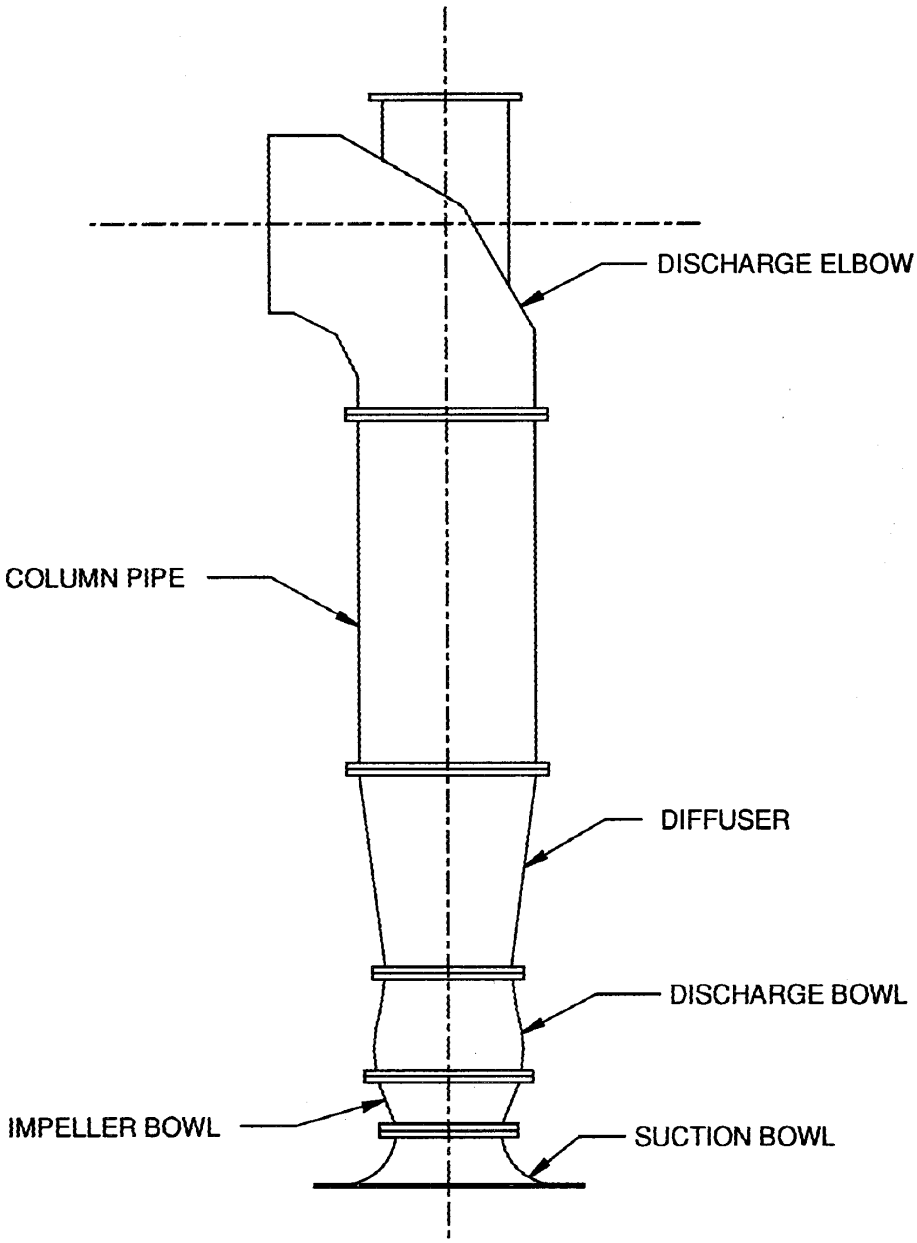


VERTICAL WET PIT PUMP

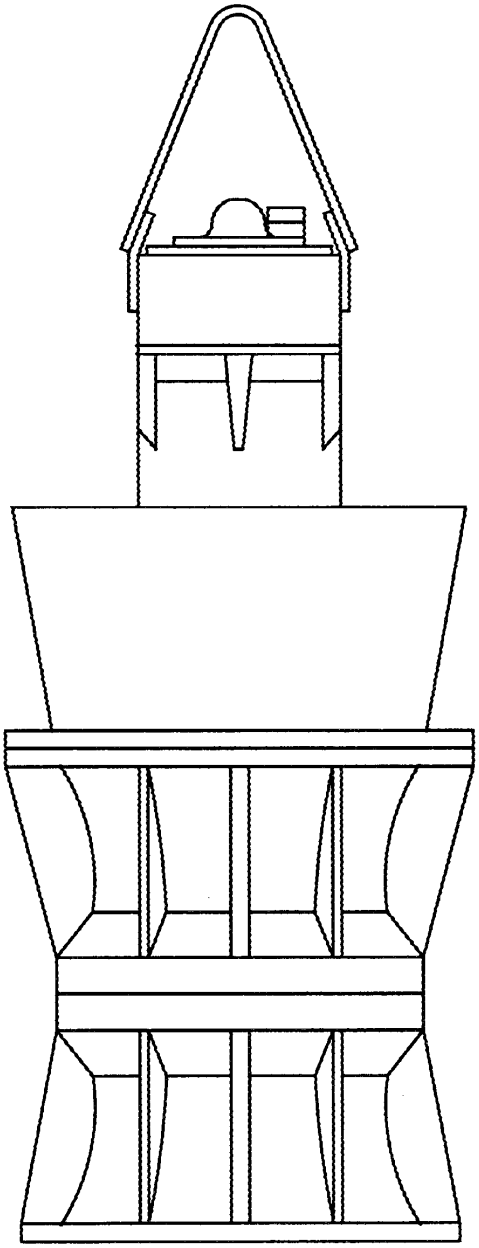

SUBMERSIBLE PROPELLER PUMP

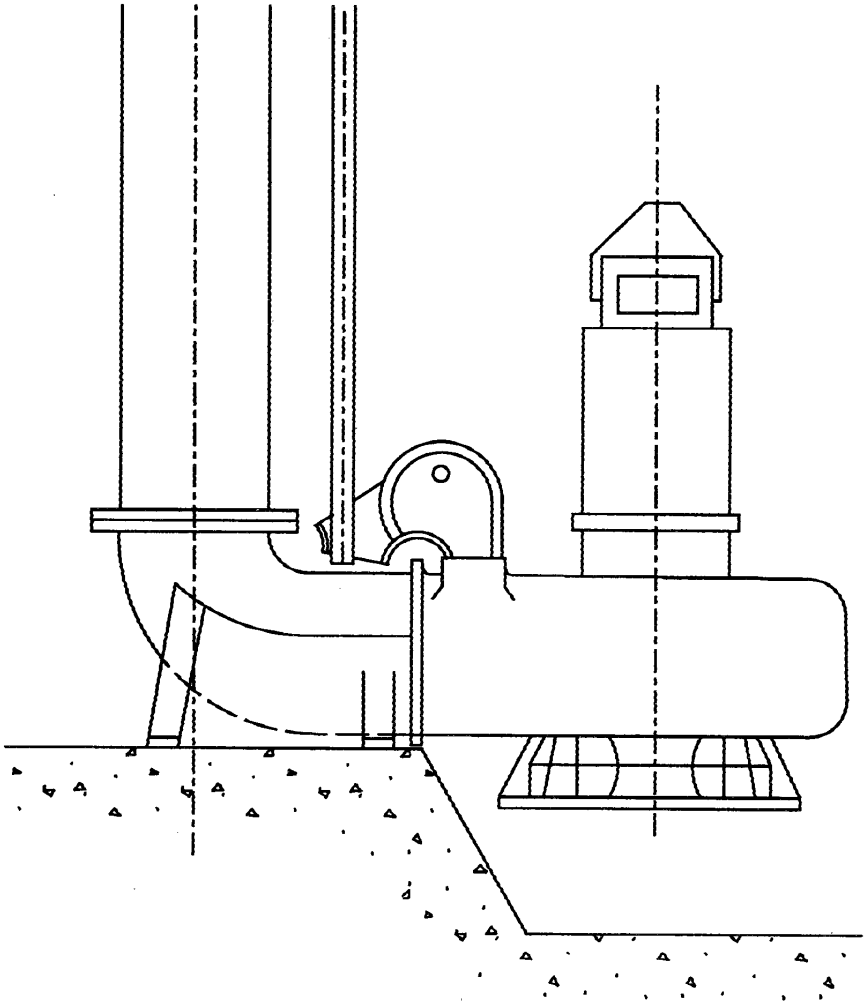

SUBMERSIBLE VOLUTE PUMP