EM 1110-2-3104
30 June 1989

US Army Corps
of Engineers

ENGINEERING AND DESIGN

Structural and Architectural Design of Pumping Stations

ENGINEER MANUAL

DEPARTMENT OF THE ARMY
U. S. Army Corps of Engineers
Washington, D. C. 20314-1000

EM 1110-2-3104

CEEC-ED

Engineer Manual
No. 1110-2-3104

30 June 1989

Engineering and Design
STRUCTURAL AND ARCHITECTURAL DESIGN OF PUMPING STATIONS

1. Purpose. The purpose of this manual is to present the primary features common to pumping station facilities intended for interior drainage on civil works flood protection projects and to present guidance for their architectural and structural design. Much of this guidance is general in nature with liberal reference to appropriate Corps manuals and other design guides. However, specific design guidance is provided for areas involving loading or other factors unique to pumping station structures.

2. Applicability. This manual applies to all HQUSACE/OCE elements and field operating activities having civil works responsibilities.

3. Discussion. EM 1110-2-3105, Mechanical and Electrical Design of Pumping Stations, dated 10 December 1962, is being revised and is scheduled for completion in FY 90. A formed suction intake will be incorporated in the revised EM 1110-2-3105. The formed suction intake has not been incorporated in this EM.

FOR THE COMMANDER:

ALBERT J. GENETTI, JR.
Colonel, Corps of Engineers
Chief of Staff

This manual supersedes EM 1110-2-3103 dated 29 February 1960 and EM 1110-2-3104 dated 9 June 1958.

Engineer Manual
No. 1110-2-3104 30 June 1989

Engineering and Design
STRUCTURAL AND ARCHITECTURAL DESIGN OF PUMPING STATIONS

Table of Contents

Subject	Paragraph	Page
CHAPTER 1. INTRODUCTION		
Purpose and Scope	1-1	1-1
Applicability	1-2	1-1
References	1-3	l-l
Rescission	1-4	1-2
CHAPTER 2. GENERAL REQUIREMENTS		
Location	2-1	2-1
Size	2-2	2-1
General Configuration and Site Work	2-3	2-1
Design Life	2-4	2-2
Seismic Defensive Design	2-5	2-2
Alternative Studies	2-6	2-2
Design Coordination	2-7	2-2
CHAPTER 3. ARCHITECTURAL DESIGN		
General Architectural Considerations	3-1	3-1
Safety	3-2	3-3
Types of Construction	3-3	3-3
Architectural Designs	3-4	3-3
Roofing	3-5	3-5
Windows and Skylights	3-6	3-6
Doors	3-7	3-7
Stairways	3-8	3-7
Toilet Facilities	3-9	3-7
Sheet and Miscellaneous Metal	3-10	3-8
Interior Finishes	3-11	3-8
Built-in Furniture	3-12	3-8
Screening	3-13	3-8

Table of Contents (Continued)

Subject	Paragraph	Page
CHAPTER 4. STRUCTURAL ANALYSIS AND DESIGN		
Foundations	4-1	4-1
Primary Structural Components	4-2	4-3
Structural Loads	4-3	4-6
Loading Conditions and Design Criteria	4-4	4-11
Stability	4-5	4-13
Design Stresses	4-6	4-14
Miscellaneous Features	4-7	4-14
Appurtenant Structures and Facilities	4-8	4-18

Table of Contents (Continued)

List of Plates

Description	Plate No.
Design Network Diagram	1
Typical Open Forebay Type Pumping Station With Over the Levee Type Discharge	2
Typical Open Forebay Type Pumping Station - Superstructure and Trash Deck	3
Typical Open Forebay Type Pumping Station - Substructure	4
Urban Industrial Installation With Floodwall Type Flood Protection	5
Large Urban Pumping Station - Superstructure, Trash Deck, and Operating Floor	6
Large Urban Pumping Station - Substructure, Pump Floor, Forebay, and Intake Sump Area	7
Large Civil Pumping Installation - Operating Floor, Forebay Deck, Superstructure, and Quarters Area	8
Large Civil Pumping Installation - Equipment Floor, Forebay, Sump Area, and Discharge Area	9

Table of Contents (Continued)

List of Appendices

Subject		Page
APPENDIX A	PHOTOGRAPHIC ARCHITECTURAL ILLUSTRATIONS	A-l
APPENDIX B.	FLOTATION STABILITY	B-l
APPENDIX C.	DESIGN GUIDANCE FOR CONDUITS THROUGH LEVEES	C-l

CHAPTER 1
INTRODUCTION

l-l. Purpose and Scope. The purpose of this manual is to present the primary features common to pumping station facilities intended for interior drainage on civil works flood protection projects and to present guidance for their architectural and structural design. Much of this guidance is general in nature with liberal reference to appropriate Corps manuals and other design guides. However, specific design guidance is provided for areas involving loading or other factors unique to pumping station structures.

1-2. Applicability. This manual is applicable to all HQUSACE-/OCE elements and field operating activities having civil works responsibilities.

1-3. References. The following manuals and design guides contain information pertinent to the design of pumping stations and appurtenant structures.

a. Department of the Army Corps of Engineers Publications.

TM 5-809-1, Load Assumptions for Buildings.
TM 5-809-3, Masonry Structural Design for Buildings.
TM 5-809-10, Seismic Design for Buildings.
EM 385-1-1, Safety and Health Requirements Manual.
EM 1110-1-1804, Geotechnical Investigations.
EM 1110-1-2101, Working Stresses for Structural Design.
EM 1110-2-1913, Design and Construction of Levees.
EM 1110-2-2000, Standard Practice for Concrete.
EM 1110-2-2102, Waterstops and Other Joint Materials.
EM 1110-2-2103, Details of Reinforcement-Hydraulic Structures.
EM 1110-2-2502, Retaining and Flood Walls
EM 1110-2-2902, Conduits, Culverts and Pipes.
EM 1110-2-2906, Design of Pile Structures and Foundations.
EM 1110-2-3101, Pumping Stations-Local Cooperation and General considerations.
EM 1110-2-3102, General Principles of Pumping Station Design and Layout.
EM 1110-2-3105, Mechanical and Electrical Design of pumping stations.

EM 1110-2-3400, Painting: New Construction and Maintenance.
ER 1110-2-1150, Engineering After Feasibility Studies.
ER 1110-2-1806, Earthquake Design and Analysis for Corps of Engineers Projects.
CEGS-02724-N7, Force Mains and Inverted Siphons: Sewer

b. Other Technical Publications:

"Building Code Requirements for Reinforced Concrete (ACI 318-83) (Revised 1986)". Available from American Concrete Institute, Box 19150, Detroit, MI 48219.

"Builders' Hardware". Available from American National Standards Institute (ANSI), 1430 Broadway, New York, NY 10018.

"Building Code Requirements for Minimum Design Loads in Building and Other Structures, (ANSI A58.1.)". Available from American National Standards Institute (ANSI), 1430 Broadway, New York, NY 10018.

"Standard Specifications for Highway Bridges," The American Association of State Highway and Transportation Officials (AASHTO). Available from AASHTO General Offices, 444 North Capital Street, N.W., Suite 225, Washington, D. C. 20001.

"National Fire Protection Association (NFPA) Codes". Available from National Fire Protection Association, Batterymarch Park, Quincy, MA 02269.

"Occupational Safety and Health Administration (OSHA) Standards". Available from Occupational Safety and Health Administration, 200 Constitution Avenue, N. W., Washington, D. C. 20210.

"Manual of Steel Construction," American Institute of Steel Construction (AISC). Available from American Institute of Steel Construction, Inc., 400 North Michigan Avenue, Chicago, IL 60611.

"Uniform Building Code (UBC)". Available from: International Conference of Building Officials, 5360 South Workman Mill Road, Whittier, CA 90601.

1-4. Rescission. EM 1110-2-3103, Architectural Design of Pumping Stations, 29 February 1960 and EM 1110-2-3104, Structural Design of Pumping Stations, 9 June 1958.

1-4. Rescission. EM 1110-2-3103, Architectural Design of Pumping Stations, 29 February 1960 and EM 1110-2-3104, Structural Design of Pumping Stations, 9 June 1958.

CHAPTER 2
GENERAL REQUIREMENTS

2-1. Location. The term pumping station as used in this manual refers to the total pumping and water handling facility including the building for pumping equipment, inflow facilities, discharge facilities, gate structures, gravity flow conduits, headwalls, retaining walls, and other appurtenant structures and facilities. The location of a pumping station is determined by hydrologic and hydraulic considerations with due consideration for existing foundation conditions, power requirements and availability, access requirements, space restrictions, aesthetic impacts, and the desires of local concerns. The location should be selected to provide the most cost effective arrangement.

2-2. Size. The size of the pumping station and its appurtenant structures is based on the hydraulic capacity required. The size and configuration of the pumping station is determined by the sump area and depth required, the equipment clearances needed and, for larger plants, the need for other facilities such as interior maintenance space and personnel areas. Pumping plant sizing is treated in detail in EM 1110-2-3102, and EM 1110-2-3105.

2-3. General Configuration and Site Work. The facilities to be incorporated into each pumping station should be arranged to perform their functions efficiently and effectively and with consideration for economy of construction and maintenance. The site treatment will be dictated by the general plant setting (urban or rural, industrial or residential, etc.). Pumping stations may be constructed either above or below grade, may be either indoor or outdoor types, and may be designed in a variety of orientations to the inflow and discharge facilities. Personnel and equipment access required for construction and maintenance of the project are important considerations in the general plant configuration. This access may be provided by existing streets with only minor new roadway construction, or may require construction of a new roadway. This can be a significant construction cost item and should be addressed early in the design process. The presence of an access road on the pumping plant site can have a pronounced impact on the amount and type of grading and site work required, and on the design of facilities passing under or located adjacent to the roadway (e.g., retaining walls, discharge piping, etc., which may be subjected to vehicle wheel loading). Landscaping will usually be required on approach channel slopes, roadway shoulders, levee slopes, etc. Factors influencing the initial work of this type include plant setting,

size of plant area, surface treatment of surrounding area, and future maintenance of the plant site.

2-4. Design Life. Most pumping station facilities designed by the Corps of Engineers, whether operated by the Corps or a second party, should be designed for a functional life of 50 years. The impact of this requirement on the structural and architectural design of the facilities is that each component must be designed to function dependably with minimum maintenance and repair, consistent with sound economic planning and good structural and architectural design practice. The design life may be 100 years if the structure is considered to be very important and its size is such that it is considered a major civil works project. These structures have usually been retained by the Corps for operation and maintenance.

2-5. Seismic Defensive Design. In areas where seismic activity must be considered but where seismic design is not warranted by the importance of the pumping plant or by economics, certain defensive design measures can be economically built into the facility. The pumping station can be placed far enough from the protection line to allow the discharge conduits to flex under ground motion without fracturing or shearing. Also additional flexible couplings may be employed and pipe bends may be installed at intervals in the discharge lines to allow movement without failure. These measures must be considered early in the plant layout process as alternatives to seismic design procedures, which could greatly increase first cost and adversely affect the feasibility of smaller projects.

2-6. Alternative Studies. When determining the general plant layout and designing the features of a pumping station project, attention should be given to long term as well as first cost. Throughout the design process, alternative materials, methods, and equipment should be analyzed on a life-cycle cost basis to assure that overall economy is achieved over the design life of the installation.

2-7. Design Coordination. The sequence of events necessary in the design of a typical pumping station facility is graphically depicted on Plate 1, Design Network Diagram. This network indicates the necessary coordination between the various design disciplines throughout the design so the process can flow smoothly from the initial site layout through the functional layout to the final structural and architectural design of the project. Coordination among design disciplines is vital to the timely completion of a functional and cost effective design.

CHAPTER 3
ARCHITECTURAL DESIGN

3-1. General Architectural Considerations.

a. Locale. Locale will determine some basic design factor: that must be considered in the layout and architectural design of the facility. Geographical impacts may include prevailing weather effects on the building mass design. For example, periodic freezing precipitation requires recessed or covered exterior entrance/egress doors and solar shielding may be appropriate in arid or warm regions. Stringent seismic design requirements impact on some architectural details, particularly when masonry is used for structural or aesthetic purposes. Location can also impact on the basic design because of aesthetic requirements. In a remote site, the structure could require only a utilitarian envelope while a more urban location would require more attention to architectural appearance.

b. Native Architecture. The architecture of the community or region should be considered in selecting the architectural style. If there is an existing prevailing style that would be derogated by a contrasting structure, a similar or complementing style using materials and characteristics of the existing architecture should be strongly considered.

c. Materials. Criteria for material selection, in descending order of importance, should be performance, durability, maintainability, economy, and aesthetics. Materials and systems to be used for construction should conform to standard Federal or Corps specification requirements and recognized standards such as those of the American Society for Testing and Materials (ASTM) and the American National Standards Institute (ANSI). Specifications should require materials that are readily available and likely to be available in the future so as to minimize maintenance and repair costs throughout the design life of the structure. Native materials should be used where feasible.

d. Functional Design. The spatial plan and volumes derived in the pumping station design should provide an organization of the necessary spaces in a fundamental relationship that satisfies the following:

(1) Spaces for all equipment and personnel.

(2) A proper relationship of functions for efficiency, economy, and an organized overall building mass.

(3) A structure and envelope which meets the requirements of the current building code applicable to the geographic location unless directed otherwise by local authority to comply with more restrictive local codes.

(4) Efficient interior and exterior traffic patterns for people, cranes, mobile equipment, and maintenance operations.

(5) Adequate egress space and components to meet the current NFPA 101 Life Safety Code and NFPA 80, Fire Doors and Windows.

(6) Adequate building facilities and provisions to meet national safety and health codes, especially OSHA.

(7) Verification that the pumping station will be manned by an able-bodied staff or if the station will require extra measures in space and equipment to meet the handicapped codes.

(8) Pubic access should be arranged such that unescorted tours of the station are possible without interference with normal operation.

e. Space Requirements. Specific space requirements will be determined by the equipment required to perform the pumping functions of the station and all of the other equipment and support activities associated with its operation. In all but the smallest stations, the following spaces are usually required:

(1) Adequate spaces for basic pumping equipment installation, maintenance, and removal.

(2) Supporting personnel areas including space for direct access into the station, an office enclosure for administrative operations, and a toilet.

(3) Storage areas for operational portable equipment, general supplies, and tools when required for on-site maintenance activity.

(4) Functionally related exterior and interior spaces for the access, handling, and exiting of large equipment during its replacement or maintenance.

(5) Egress space as required by NFPA Life Safety Codes for exit access and discharge.

f. Vandalism. Exterior building components should be selected, located, and installed in such a manner as to deter pilfering or physical damage to the station by vandals.

3-2. Safety. The physical components of the building including the general envelope, structural system, walls, partitions, corridors, stairs, and doors related to personnel egress patterns or hazardous storage must comply with the requirements of NFPA 101 Life Safety Code and NFPA 80 Fire Doors and Windows. Equipment areas, equipment access areas, and access components therein, such as ladders, platforms, and guard rails, must comply with the requirements of OSHA, including those regarding noise.

a. Barriers. Security fences should be used as a deterrent but should not be hazardous. Exterior railings should comply with OSHA except that those in public access areas intended to prevent falls to levels more than thirty inches below should be in compliance with NFPA 101 Life Safety Code. Interior railings used in personnel egress patterns should also comply with NFPA 101 Life Safety Code.

b. Gratings. Gratings in floors of equipment areas must comply with OSHA Standards. Gratings and other perforated surfaces are not allowed in personnel egress route floors.

c. Signage. As a minimum, signage must be provided for piping identification by standard codes, personnel egress routes, and all hazards.

3-3. Types of Construction. In general, a pumping station should be a permanent, low-maintenance, and secure structure. Pumping stations should be constructed of fire-resistant or noncombustible materials such as reinforced concrete, masonry, structural steel, or combinations. Generally, a monolithic reinforced concrete structural frame or a structural steel frame with a concrete or masonry skin will provide the desired qualities producing long-term service and low maintenance. Steel structures with metal skins generally afford a lower first cost. However, they are also more susceptible to maintenance problems, have shorter life spans, and have inherent acoustical problems when enclosing noisy equipment.

3-4 Architectural Designs. Some of the important architectural designs are discussed in the following paragraphs.

a. Structural Systems. The interfacing of dissimilar materials at the juncture of structural frame components and envelope systems requires special attention. Arrangements where

the envelope system is connected to an exposed structural frame are not recommended because of weather tightness problems at the junction. A crane support system should be independent of the building envelope unless it is economically feasible for both systems to be monolithic concrete. Where the structural system for a crane is integral with the envelope system, the juncture requires special attention because of the transfer of superimposed loads.

b. Beams, Columns and Pilasters. The location and depth of beams should be coordinated with the layout of equipment to be installed and with the vertical clearances within the spaces to prevent conflicts with equipment, ducts, pipes, fittings, supports, operational headroom, and maintenance operations. If load-bearing walls or concentrated loadings cannot be supported by structural walls or columns, beams or adequate floor design must be provided. Smooth-surface reinforced concrete is usually preferred for girders and beams because of low maintenance costs. Steel or composite construction may require additional maintenance because of the nature of the materials. Columns and pilasters should be simple in form except where dictated otherwise by aesthetic considerations. Concrete should be used as the column material when feasible; steel is acceptable when reduced first cost is a factor, but masonry columns should be avoided.

c. Walls. Exterior walls, in addition to being structurally sound, must be durable, contain as few openings as practical, require little maintenance, and contribute aesthetically. Concrete or masonry which does not require painting is preferred. Walls below grade which enclose operating areas should be of reinforced concrete. Where functions of areas below grade require dry conditions, or where the water table is known to present hydrostatic problems likely to circumvent normal waterstops, a permanent enclosure such as a three-ply waterproof membrane is required. Retrofit or superficial measures such as sump pumps, which present long-term additional maintenance problems should be avoided, if possible.

d. Floors. Floors should be constructed of concrete with a wood float finish in most areas of pumping stations. Steel trowel finished concrete or other superficial floor finishes may be used in certain specified areas. Floor opening covers should be checkered steel plate, set flush in steel angle frames with gas-tight resilient seals. Steel grating may be used in outdoor locations. A cover juncture of the floor and wall surfaces is desirable as an aid to efficient cleaning. The cover should be

of permanent hard material so as to withstand wash down operations. Where floors slope to drains, the entire floor area should slope, not just the area adjacent to the drain.

3-5. Roofing. Roof systems should be appropriate for the locale. Roofing may be built-up, shingles, metal, or tile. Tile or slate shingles provide long term service but usually have a higher initial cost. The other systems have a lower initial cost but require more maintenance and have shorter life expectancies. Single-ply roofs with ballast can catch dust, dirt, leaves, and seed, and consequently grow vegetation requiring more maintenance. Ballastless single-ply roofs are subject to uplift and problems caused by direct ultraviolet exposure. Built-up roof systems using wood-fiber-based felts should be avoided. Fiberglass-based felts perform well, as do rag-based felts. Galvanized metal, composition shingles, built-up systems, and single-ply roofs can be expected to perform adequately for approximately fifteen years. Thus, any economic evaluation of these types of roofing against other more durable systems must provide for initial installation plus several roof replacements during the design life of the facility. If economically feasible, the optimum fifty-year design roofing of tile, slate shingles, copper or other noncorrosive metal should be used. Additionally, if the station location is such that aesthetics is an overriding factor, appearance considerations may justify an additional expense consistent with good architectural design.

a. Parapets. If parapets are used on all sides of the building, care must be taken to provide secondary overflow scuppers or other drains to insure positive roof drainage should the primary drainage system become clogged.

b. Slope. Limitations on slopes of different roofing systems vary. The slope of built-up roofs should not be less than one-quarter inch per horizontal foot. Generally, the slope of built-up roof should be between one-quarter and one-half inch per horizontal foot. Slopes of the built-up roof greater than one-half inch per horizontal foot require mechanical fastening of the system, and type II asphalt is required on slopes up to one inch per horizontal foot and type III is required on steeper slopes. Built-up roof slopes exceeding one inch per horizontal foot should be avoided. The minimum slope for composition shingle roofs is two inches per horizontal foot. The minimum slope for slate shingles is three inches per horizontal foot. Shingles sloped less than four inches per horizontal foot require two layers of felt underlayment, while those sloped more than four inches require only one. Metal roofs do not generally

perform well at slopes less than three inches per horizontal foot. Slopes for various types of tile roofs are generally steeper than for other systems, the minimums being three inches per foot for flat tile, four inches for Spanish "S" tile, and five inches for barrel "pan and cover" tile.

c. Expansion Joints. Roofing expansion joints should only be used along lines of expected differential movement between separate segments of the building or when the roof system is so large that thermal control will be a problem. The latter is unusual for pumping stations as they are relatively small structures. When joints are required, a durable expansion joint material should be selected to provide long, trouble-free service.

d. Flashing. Particular detailing emphasis should be placed on the perimeter of the roof. Curbs, penetrations, parapets, scuppers, and gutters present far more leakage problems than the roof membrane itself. Roof details such as perimeter parapets or wall-to-roof junctures should be designed to allow adequate movement without rupture by the proper use of flashing, counter-flashing, and materials which will provide long-term service.

Penetrations. The mounting of equipment, antennae, flag poles, guy-wires, or other such items on or through the roof system should be avoided if possible, as such point-loadings and penetrations often become sources of leakage problems. Where penetrations are necessary, pitch pockets should be avoided since they are sources of repetitive leakage problems.

f. Roof Drainage. Gutters, with or without downspouts, should be avoided because of year-round maintenance problems, especially in the winter. Roof drainage discharge should be designed so that it does not interfere with building access and egress, is not detrimental to exterior equipment, and does not create standing water or long-term wet conditions at ground level.

g. Roof Insulation. Roof insulation, when required, should be appropriate for the roofing system and the roof structure.

3-6. Windows and Skylights. Careful consideration should be given to the need for windows or skylights. Openings in the exterior walls should be restricted to the minimum required for efficient operation of the station because they require maintenance and are subject to vandalism. Windows are not usually

warranted for the use of daylight for energy conservation purposes and visibility to the outside of a pumping station is not of primary importance. Any required fenestration should be in character with the architectural style of the station. Window hardware should be sturdy and durable and of noncorroding material. Frames and sashes should be of metal rather than wood. Perimeter closure material should be a nonhardening flexible paintable "sealant" rather than "caulking." Head and sill flashings should be of durable noncorrodible materials such as a flexible elastomeric synthetic or copper. Lintels or corresponding components in composite wall construction must be structurally adequate, properly flashed, and shaped to withstand the elements. Skylights should be of one-piece construction, self--flashing, and of the curb-mounted type.

3-7. Doors. All doors should be selected for function, good security, durability, and heavy industrial usage. Doors of hot-dipped galvanized steel, flush or paneled design as aesthetically required, are more durable than primed steel, aluminum, or wood. Metal gauges should be adequate to withstand abuse from impacts caused by the handling of heavy equipment.

a. Ratings. Door and frame construction required to carry fire labels must be in compliance with the NFPA 101 Life Safety Code and NFPA 80, Fire Doors and Windows.

b. Hardware. Butts, locksets, latchsets, closers, holders, and kick plates should all be selected for long-term service. Locksets with removable cores for easy keying changes should be specified. Butts should be heavy and noncorrodible. Exterior out-swinging doors should have butts with nonremovable pins. Padlocks should be avoided as they can be easily cut.

3-8. Stairways. Stairs should be constructed of concrete, steel, or a combination of the two. Wood construction should not be used. Treads should be provided with nonskid nosings or an integral abrasive in the tread surface. Stairways that are part of the egress pattern must have widths, run lengths, landings, treads, risers, handrails, guardrails, headroom, door sizes, door swings, door ratings, interior finishes, windows, and other openings in accordance with NFPA 101 Life Safety Code and NFPA 80 Fire Doors and Windows. Stairs and ladders for equipment access need only comply with OSHA requirements.

3-9. Toilet Facilities. A toilet with a lavatory and water closet should be provided unless satisfactory facilities are available adjacent to or not too distant from the station. Electronic toilets which need not be drained in freezing weather

should be used in locations that experience extremely cold winters. Toilet areas require absorption-resistant surfaces to afford easy long-term maintenance.

3-10. Sheet and Miscellaneous Metal. All sheet and miscellaneous metal should conform to applicable Federal Specifications, but should generally be of noncorroding material.

3-11. Interior Finishes. Elaborate or ornate interior finishes should not be used. Durable but easily maintained finishes should be used.

a. Floors. Floors should typically be exposed concrete, broom or steel trowel finished as required by the use of the area.

b. Interior Walls and Partitions. Interior walls and partitions should be smooth, durable, easily cleaned, and painted only where light reflectivity or sealing of the surfaces are required. In general, exposed concrete does not need additional finish material unless climatic conditions dictate additional envelope U-Value requirements.

c. Ceilings. Except for office areas which should have an acoustical ceiling system and toilet areas below a high roof structural system, no special ceiling installation is required.

d. Office Areas. Office areas should be simple but comfortable, easily cleaned, and enveloped in a space of low sound transference with surfaces of good light reflectivity and low sound reverberation.

e. Ferrous Metals. Where frequent moisture or contact with human hands is expected, such as at stair handrails and guardrails, ferrous metals should be hot-dip galvanized. Other ferrous metal items such as columns, beams and other exposed structural building components should be primed and painted.

3-12. Built-In Furniture. Built-in furniture should not be used except as required for special applications where movable furniture does not meet the needs of the function.

3-13. Screening. Exterior openings such as louvers or ventilators should have screening to prevent the entry of birds, rodents, and insects. Such screening should be located other than on the outside face of the opening so as to inhibit vandalism, while remaining accessible for screen replacement when required.

CHAPTER 4
STRUCTURAL ANALYSIS AND DESIGN

4-1. Foundations. The foundation materials encountered may be a determining factor in the siting and layout of a pumping station. In some areas, the measures required to provide a proper foundation for the structure may be prohibitive and may dictate relocation of the plant site. Sufficient soil sampling and testing should be done prior to selecting a site so that the type and extent of foundation work required can be estimated. Investigations, including sampling and testing, should be performed in accordance with the provisions of EM 1110-1-1804.

a. Soil Foundations. For structures founded on soil, a determination of soil type, shear strength, cohesion, internal friction angle, and unit weights in dry, moist, and submerged (or saturated) conditions must be made for each material to be used in backfill or embankment sections and for each material in the foundation. From these parameters, the allowable foundation bearing value will be determined. Also from these parameters, structure and embankment settlement and slope stability for excavation and embankments will be assessed. The results of the settlement analyses will be used by the structural engineer in designing discharge piping connections and the low flow and discharge culverts. These designs should be coordinated between the geotechnical and structural design elements. Therefore, contact between these design elements should be established early and coordination maintained throughout the design process.

b. Rock Foundations. Where small structures are to be founded on rock it will usually be unnecessary to make comprehensive rock tests. However, early in the design process sufficient coring and testing must be accomplished to determine the load carrying capacity of the foundation material, and to identify any faults, seams, or other potential problem areas. For large structures, a comprehensive program of foundation exploration must be initiated early in the design process so that sufficient foundation information will be available for use in the facility siting studies. This exploration program should progress from a general investigation of various sites to an in-depth investigation of the finally approved site. Pumping station substructures are generally formed of reinforced concrete having compressive strength of from 2,500 to 3,000 psi, and the proportioning of the structure for allowable base pressure is controlled by the compressive strength of the soil foundation material. However, for structures founded on rock, the compressive strength of the

foundation material may be greater than the bearing strength of the substructure concrete. In these instances, the structure base must be proportioned so that these pressures do not exceed the strength of the concrete. Also, in some instances the foundation rock may be fractured or contain seams which could shift or compress under loading, causing movement of the structures above. In these instances, the structures may be founded on drilled caissons with the foundation grouted to preclude underseepage.

c. Pile Foundations. If the foundation materials do not have sufficient bearing capacity to sustain the imposed structure loads, and if other stabilizing methods are impracticable or unfeasible, foundation piles may be required. The piles may be of wood, concrete, or steel, but the use of wood piles should be restricted to those locations where the pile cut-off elevation is below the minimum ground water level. Design loading for piles and pile lengths required to sustain a given loading should be verified by driving and loading test piles in accordance with the provisions of EM 1110-2-2906. For small plants requiring foundation piles, the cost of pile load tests may be prohibitive. In these cases, conservative values may be assumed for pile design and load tests may be omitted. Large horizontal loadings are sometimes imposed on pumping stations and appurtenant structures. When these structures are founded on piles, they must be designed to withstand this horizontal loading. Battering the piles is one effective technique for this purpose. Vertical piles can also be used if documented by appropriate analysis. The method used in designing the pile foundations will generally be dictated by the size of the structures and resulting size of the supporting pile group. For nominally loaded structures requiring small pile groups, conventional pile design methods may be used. For large structures involving extreme horizontal loading, more detailed analysis and design methods may be required, as discussed in EM 1110-2-2906.

d. Foundation Alternatives. If investigations indicate that the foundation materials are incapable of sustaining the imposed loads without failure or unacceptable amounts of settlement, a variety of alternative compensatory measures may be taken. Some of the possible alternatives are:

(1) Provide footings outside the lines of the substructure walls.

(2) Excavate and replace unsuitable material to a sufficient area and depth to provide a stable foundation on good

material.

(3) Employ in-situ foundation improvement methods such as dynamic compaction, vibro-replacement, in-situ densification, and preloading and drainage using wick drains.

e. Ground Water Control. Management of ground water during construction and under operating conditions is often a sizeable task. During construction, the ground water level must be lowered enough to allow the work to proceed. This is a particular problem for pumping stations because they are usually located in low lying areas to facilitate water intake. Under operating conditions, it may be necessary to suppress the ground water level to keep uplift pressures within acceptable limits. Ground water control is usually accomplished by relief wells from which water is pumped to lower the ground water level. Another problem related to water handling is the seepage of water beneath the structure. Measures to lengthen the path of this underseepage and thus reduce its effects on structure stability include the placement of a concrete cutoff wall or construction of a monolithic structural key to some depth beneath the structure foundation elevation and near the face of the structure at which seepage originates.

4-2. Primary Structural Components. The primary structural components of a pumping station are the substructure, operating floor, superstructure, crane runways, and discharge facilities.

a. Substructure. The conventional pumping station substructure includes the sumps and water passages required to conduct water to the pump intakes. The structural components comprising the substructure include the sump floors and base slabs for the water passages, the outer walls of the structure, and the sump separator walls. The sump area components are generally analyzed as a frame extending from the foundation to the operating floor. The forebay area is similarly designed assuming a frame extending from the foundation to the top of the side walls or to the top of the exterior forebay deck. For both of these analyses, care must be taken to assure that the assumed degree of fixity at the frame joints reflects as nearly as possible the actual behavior of the structural components under critical design loading conditions. For some pumping stations, other areas will require detailed structural analysis, such as the intake/trashrack deck, the discharge chamber if constructed integrally with the pumping station, dewatering sump areas required in some installations, and retaining wall or flood wall sections constructed monolithically with the pumping station.

b. Operating Floor. The primary interior structural floor is the operating floor. The electrical and mechanical water handling and control equipment is mounted on this floor, subjecting it to the dead weight of the pumping and control equipment, and the hydraulic thrusts generated during the pumping operation. The design of the operating floor is complicated by the presence of the necessary hatchways, pump openings, etc., which interrupt the continuity of the structural floor. The layout of this floor for spans over sump walls, location of machinery, and location and size of openings, is a coordinated effort involving hydraulic, electrical, mechanical, architectural, and structural requirements. The floor is usually designed as a system of beam sections and slabs laid out about the various openings and spanning across the supporting walls below. The sump layout determines the location of these supporting walls and the location of the pumps on the floor. This layout is also a coordinated effort involving input from mechanical, hydraulic, and structural requirements to arrive at the optimum arrangement for each plant. Once the general layout and loading configuration for the operating floor are determined, the design of the structural elements can be undertaken. These elements may be designed assuming the floor to act independently of the supporting wall sections below, or the operating floor, supporting walls and sump floor may be designed as a continuous frame. The assumptions made will be dictated by the relative size of the components and the general configuration of the plant structure, and must be consistent with the way the structure is expected to behave under the design conditions.

c. Superstructure. Most pumping plant installations will be of the indoor type. This means that an enclosure is provided for the equipment and personnel areas in the plant. This enclosure must be sufficiently tight to protect the equipment from the elements and sufficiently durable to be economically maintained. It must also withstand the loading conditions given in paragraph 4-4. Pumping station superstructures are commonly constructed of reinforced concrete, or concrete masonry unit and/or brick wall sections. In structures of brick or concrete masonry, a separate framework is usually provided inside the outer enclosure to support the bridge crane. It is often economical to incorporate this framework in the structural wall and/or roof section to provide additional strength and support; however, with larger cranes, the operating forces may dictate that the crane support framework be separated from the wall sections so these forces will not be transmitted to the superstructure walls.

d. Crane Runways. As prescribed in EM 1110-2-3105, indoor type plants are usually equipped with bridge cranes for equipment removal and handling unless other workable and economical means can be used. The runways for the bridge crane may be mounted on structural steel or reinforced or prestressed concrete beam sections supported on structural steel framework, on reinforced concrete column or haunch sections, or on ledges formed in reinforced concrete. Generally, only in larger installations with reinforced concrete superstructures will the walls be large enough to support the crane loads.

e. Discharge Facilities. The facilities incorporated into a pumping station for discharge across the protection line can be of various types and configurations. A station located on the protection line will usually discharge directly, either by pumping into open water or into a discharge chamber constructed monolithically with the pumping station. This type of installation requires the least amount of discharge piping, but is subjected to maximum hydraulic loading from the discharge side. Also, if a discharge chamber is constructed in the pool, it must be gated and designed for maintenance access to the gates. This access can be provided by periodic unwatering under full external hydraulic load, or by an arrangement that allows the gates to be removed for maintenance. Pumping stations not located on the protection line require extensive discharge piping. This piping may be installed over, through, or under the protection line as required by the specific situation. The structural design of this piping, its supports, appurtenant gate structures, and discharge structures can be undertaken only after the coordinated plant arrangement has been determined, incorporating input from hydraulic, mechanical, and structural elements. All piping inside the pumping station should be of ductile iron, and discharge piping will usually be of ductile iron, steel, concrete pressure pipe, or cast-in-place reinforced concrete. Whether the pumping station is located on the protection line or not, it is often necessary to provide a low flow gravity discharge structure. This structure will usually include an intake headwall with bulkhead slots, a gravity discharge conduit through the protection line, a gate structure near the discharge end of the conduit, and a headwall and stilling structure at the conduit outfall. There are many variations on this arrangement including combination of the various components of the pumping station and pump discharge system and the components of the low flow discharge system. Plant arrangements involving innovative facilities or arrangements should be thoroughly reviewed from a construction and operations standpoint during the planning and layout stages to assure constructability and to facilitate

operation and maintenance over the life of the project. These unique features and arrangements should also be thoroughly coordinated with higher authority.

f. Miscellaneous Structural Items. There are, in any pumping plant, various miscellaneous items which must be addressed by the structural engineer. These include retaining walls, channel lining and slope protection slabs, and gates, flap valves, and bulkheads and their associated guides and mountings. These items generally constitute a small portion of the total project cost and are not usually designed until late in the design process. However, they should be accounted for in all estimates of project construction costs either separately, as in the case of relatively large concrete retaining wall sections, or in general terms, as in the summary "miscellaneous metal" cost item for gate guides, etc.

4-3. Structural Loads.

a. Soil Loading. Lateral soil loads for stability analyses and determination of base pressures should be computed by the method in EM 1110-2-2502. In many instances, the design of vertical walls below grade and wing walls and retaining walls will be greatly affected by wheel loads or other surcharge loads on the ground surface. These loads should be considered in structural stability calculations and in detailed structural design as appropriate. They should be derived based on the heaviest piece of machinery likely to be placed on the fill during construction or operation and maintenance of the facility.

b. Hydrostatic Loads. For the portion of the hydrostatic loading not included in the soil load calculations (water above the ground line) the conventional triangular distribution of water pressure with depth should be used. The water surface elevation will depend on the hydrologic situation at each site and must be coordinated prior to beginning structure design. A station located on the protection line will usually experience larger differential hydrostatic loads than one located inside the protection line. If a discharge chamber is used, the hydrostatic loading under unwatered conditions may be more severe with the chamber located in the discharge reservoir. The hydrostatic loading on a station inside the protection line will be related to the hydraulic gradient between the free water surfaces on the discharge side of the protection line and at the pumping station intake. This gradient is affected by the presence of foundation drains, the proximity of the station to the protection line, and the type of protection used (levee or flood wall).

c. Uplift. The uplift experienced by a pumping station will vary with its proximity to the protection line. Stations located on the protection line will generally be subjected to larger hydrostatic loads and correspondingly larger uplift pressures than those located inside the protection line. The uplift forces used in the structural design may be derived from actual field data, but more commonly will be based on an assumed flow path relating the head at the discharge side of the protection line to that at the pumping station intake. This relationship is usually assumed to be a straight line variation with the uplift at the pumping station assumed to be that portion of the gradient envelope intercepted by the vertical projection of the structure base as shown in Figure 4-1(a). The full uplift may be modified by incorporation of maintainable foundation drains into the site design, However, the uplift reduction may not exceed 50 percent of the difference between the full uplift head at the pumping station intake and that at the point of the drain (Figure 4-1(b)).

d. Seismic Loading. Seismic investigations and design should be performed in accordance with the provisions of ER 1110-2-1806. As a minimum, an investigation should be performed to determine the types and extent of defensive design measures which may be economically justified for the project to resist the effects of seismic events. These measures may include arrangement of the facilities to minimize seismic damage, use of flexible couplings on discharge conduits, and restricting the height of structures to a minimum to reduce the effects of earthquake motion. A seismic coefficient analysis, using the minimum coefficients specified in ER 1110-2-1806 should be used to calculate sliding and overturning stability for all structures subject to earthquake loading. In addition, a dynamic response analysis is required in high seismic hazard locations as specified in ER 1110-2-1806 to determine areas of high stress within the structure. The seismic forces for the components of the pumping station include the building components, fixed operating machinery, and other fixed equipment should be calculated using the procedures of TM 5-809-10. In the stability analyses, water inside the structure, confined between structure walls placed perpendicular to the direction of earthquake acceleration, is treated as part of the structural wedge, as is any saturated or moist earth mass bearing vertically on any projecting structure footing or sloping exterior wall face. Free water above the ground surface and above a structure footing or sloping exterior face Is not included as part of the structural wedge. Seismic forces for inclusion with static forces from earth and

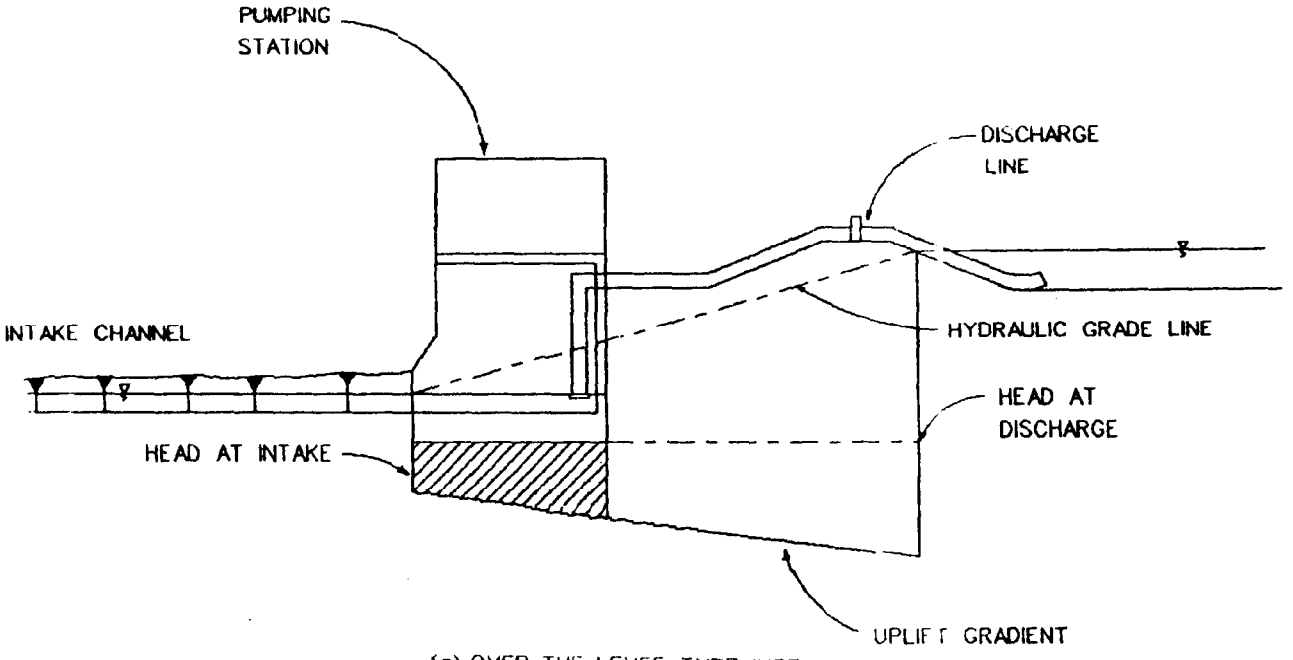

(a) OVER-THE-LEVEE TYPE INSTALLATION

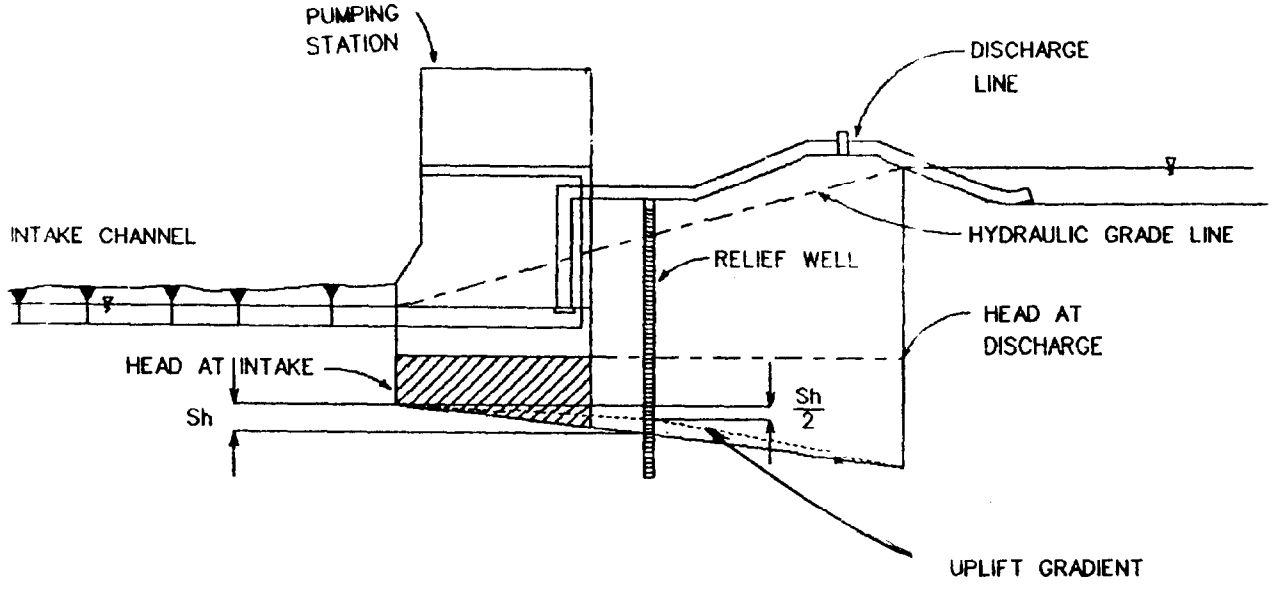

(b) OVER-THE-LEVEE TYPE INSTALLATION

WITH FOUNDATION DRAINS

TYPICAL STRUCTURE UPLIFT DERIVATIoN

Figure 4-1

water impinging on the sides of the pumping station are computed in accordance with the provisions of EM 1110-2-2502. For structures having sloping exterior walls, or footings extending outside the structure walls, the force wedges used for structure stability analysis will originate at a vertical plane projecting upward from the outer edge of the structure footing or wall at the foundation. Seismic forces due to water above ground acting in the same direction on opposite sides of a structure are calculated by the Westergaard approximation.

e. Wind Loading. Wind loads should be applied according to the provisions of ANSI A58.1. These loads should be applied in conjunction with other loads as prescribed in paragraph 4-4. Wind loads will also be applied to the appurtenant structures as applicable.

f. Floor Loads. The structural support system for the operating floor should be designed for dead loads including the weight of the pumps in their operating locations plus a minimum live load of 100 pounds per square foot. Since the pumping equipment may be removed for repairs, the floor area must be designed to support the heaviest work piece anywhere it might be placed on the floor. The machinery loads, for both service and maintenance conditions, should be furnished by the pump designer. The service loads will include the machinery weight plus the weight of the water column for most pumps, with a 50 percent increase in water column weight to account for dynamic effects. However, for some pump arrangements the pump motor and pump impeller are supported at different levels. For this arrangement, the floor supporting the motor must carry the full downward hydraulic thrust under operating conditions in addition to the weight of the rotating element and the motor. The pump support must carry the weight of the impeller and water column which will be partially offset by the upward hydraulic thrust against the pump casing. All personnel areas inside the pumping station should be designed using the applicable minimum dead loads given in ANSI A58.1. Table 4-1 gives minimum uniformly distributed live loads. For areas not covered in this table, refer to TM 5-809-l. The live loads indicated in Table 4-1 may be reduced 20 percent for the design of a girder, truss, column, or footing supporting more than 300 square feet of slab, except that, for pump room and erection floors, this reduction will be allowed only where the member under consideration supports more than 500 square feet of slab.

TABLE 4-1

MINIMUM UNIFORMLY DISTRIBUTED LIVE LOADS

	LB/SQ FT
Roofs	50
Stairways	100
Floors:	
Offices	100
Corridors	100
Reception Rooms	100
Toilets and Lock Rooms	100
Equipment and Storage Rooms	200
Control Room	200
Erection Floor	1,000
Maintenance Shop	300
Operating Room	100*
Forebay Deck (Outdoor Pumping Station)	300 or H20**
Electrical Substation Deck	200
Forebay Deck Grating	300 or H20**
Pumping Station Access	300 or H20**

* Operating floor must be designed to allow placement of the heaviest machinery piece anywhere on the floor unless specific areas are designated for this purpose.

** Use whichever is more critical and where mobile cranes might be used, applicable loading including impact loads should be applied if more critical than those listed.

g. Stairway and Landing Loads. Stairways and landings should be designed using the live load given in Table 4-1 unless special loading in excess of this amount is indicated.

h. Roof Loads. Roofs should generally be designed for dead load, live load, and either wind or seismic loading, whichever is the more critical for the plant location. In certain localities live load produced by snow accumulation must be considered. Snow loads should be determined and distributed according to the provisions of ANSI A58.1. Snow load is not included in the minimum design live loads indicated for roofs in Table 4-1. Roof live loads from Table 4-1 and imposed snow loads are

per square foot of horizontal projection.

i. Crane Runway Loads. Crane wheel loads should be treated as live loads in the design of crane runways and maximum wheel loads should be computed from the weight of the crane and trolleys plus the rated live load capacity of the crane. The load should be placed in the position that produces maximum loading on the side of the runway under consideration. The design load should include allowances for dead load, live load, impact (for power operated cranes), longitudinal forces, and lateral forces. In addition, crane stops at each end of the runway should be designed to safely withstand the impact of the loaded crane traveling at full speed with power off, and the resulting longitudinal forces should be provided for in the design of the crane runway. Acceptable allowances for impact, longitudinal forces and lateral forces are as follows:

Impact..... 10% of Maximum vertical wheel loads for cranes over 80 ton capacity. 12% to 18% of maximum vertical wheel loads for all others.

Longitudinal forces... 10% of maximum vertical wheel loads (applied at top of rail).

Lateral forces..... 10% of trolley weight plus rated crane capacity (3/4 of this amount to be distributed equally among crane wheels at either side of runway and applied at top of rail).

j. Moving Concentrated Live Loads. Medium to large pumping stations may be designed with forebay and discharge decks to accommodate trucks and heavy cranes for handling and transporting stoplogs and gates and for disposal of trash raked from intake trash racks. These decks should be designed for dead load plus the worst case live load considering the minimum uniform loading from Table 4-1 or the weight of the heaviest piece of equipment (truck crane, tractor trailer, etc.) fully loaded. Load distribution for truck loading should be made in accordance with AASHTO "Standard Specification for Highway Bridges." It may be advisable to place load limit signs at the entrances to these deck areas where these load limits are the controlling factor in the design.

4-4. Loading Conditions and Design Criteria. The following loading conditions should not be regarded as a comprehensive list. In many instances, unique site specific factors such as water conditions, station arrangement and location, pump type,

pump and discharge arrangement, etc. will dictate modification of some of these loading conditions to fit the specific site. The conditions described should be used as a guide to the range of stability analyses required. The external structure forces and distributed loads should not be factored for stability analysis, but may be subsequently factored when applied to the concrete members of the structure for use in reinforcement design in accordance with EM 1110-2-2502. Design of the miscellaneous structures associated with the pumping station (wing walls, headwalls, discharge piping, culverts, gate structures, etc.) should be based on the applicable design water levels, earth levels, etc. for those structures, and their design load conditions should be adapted from the basic loading conditions. See paragraph 4-7 for design loading and guidance to be used for these structures. Wind and snow loads should be applied in conjunction with the basic loading conditions as applicable depending on the meteorological condition at the site. Stability and stress criteria vary according to the nature of the loading condition imposed on the structures. For the purpose of criteria application, there are three categories of loading conditions; usual, unusual, and extreme. Usual conditions are defined as those related to the primary function of a structure and expected to occur during its life. For pumping stations, all of the operating flood conditions should be considered usual. Unusual conditions are those which are of infrequent occurrence or short duration. Construction condition, maximum design water level condition, maintenance conditions, rapid drawdown condition, and blocked trash rack condition are examples of unusual loading for pumping stations. Extreme conditions are those whose occurrence is highly improbable and are regarded as emergencies, such as those associated with major accidents or natural disasters. For pumping stations, pumping station inundated and earthquake conditions should be considered extreme. The basic loading conditions for design and their categories are listed below.

a. Construction Condition. Pumping station complete with and without fill in place, no water loads. Unusual.

b. Normal Operating Condition. Plant operating to discharge routine local floods over a range of exterior flood levels for which the pumps are operating at approximately 100% efficiency. Usual.

c. Start-up Condition. Station empty with water at pump start elevation or maximum pump level. Usual.

d. Pump Stop Condition. Water below pump start elevation

on intake side, levee design flood on discharge side. Usual

e. High Head Condition. Maximum design water level outside protection line, minimum pumping level inside. Usual.

f. Maximum Design Water Level Condition. Maximum operating floods both inside and outside protection line, maximum pump thrust. Unusual.

g. Maintenance Conditions. Maximum design water level inside with one, more, or all intake bays unwatered. Unusual.

h. Rapid Drawdown Condition. Water at pump stop elevation, sumps unwatered. (Apply to stations inside protection line only.) Unusual

i. Blocked Trash Rack Condition. Five foot head differential across trashracks. Unusual.

j. Pumping Station Inundated. Maximum flood levels inside and outside protection line, pumping station inoperative, foundation drains inoperative, protection line intact. Extreme.

k. Earthquake Conditions. Earthquake loading combined with normal operating condition. Extreme

4-5. Stability. Analyses should be made for stability of structures against overturning, sliding, flotation, and foundation pressure.

a. Overturning. For overturning stability, all structures should meet the criteria given in Table 4-2 for percent of base in compression.

b. Sliding. The resistance to sliding under various loading conditions will be analyzed according to EM 1110-2-2502. The result of this analysis is expressed in terms of a sliding safety factor which is the ratio between the total shear strength available in the soil-structure wedge system and the applied shear stress. The minimum sliding safety factors for various types of loading are shown in Table 4-2.

C. Flotation. The analysis of structures for stability against flotation should be performed in accordance with the procedure in Appendix B. Required safety factors are given in Table 4-2.

Table 4-2

STABILITY CRITERIA FOR PUMPING STATIONS

Aspect	Usual	Unusual	Extreme
Percent Base In Compression, Soil Foundation	100	75	0 1/
Sliding Safety Factor	2	2	1.33
Flotation Safety Factor	1.5	1.3	1.1

1/ Resultant must be within the base.

d. Foundation Pressure. In conjunction with the overturning analysis, the base pressures and foundation pressures for each loading condition should be calculated and the maximum values compared with the maximum allowable values determined for the foundation material. These maximum allowables should not be exceeded for any loading condition. The allowable values should be coordinated between the geotechnical and structural engineers.

4-6. Design Stresses. Allowable working stresses for structural materials will generally be as prescribed in EM 1110-1-2101, except that reinforced concrete structures should be designed in accordance with the strength design method given in EM 1110-2-2502. Working stresses for use in proportioning masonry structural components should be taken from TM 5-809-3. For earthquake loading, design stresses should be evaluated in accordance with guidance given in ER 1110-2-1806 and TM 5-809-10.

4-7. Miscellaneous Features.

a. Discharge Lines. Design of the pump discharge lines is based on the type of protection works, consideration of backflow effects, and economics. There are two general categories of discharge piping, over the protection line and under or through the protection line. The under or through type is more susceptible to backflow problems and should be avoided if possible. However, a properly designed system is acceptable and may result in significant cost savings compared to the over-the-protection line type. Discharge piping passing over levees should be of steel or ductile iron suitable for use with dresser or other

flexible couplings. The pipe should be supported by the embankment surface on the inside slope and crown of the levee and buried in a trench on the discharge side, with adequate cover to protect it from damage or exposure by erosion. It should be anchored to prevent flotation during high water. The anchorage can be concrete supports placed at intervals along the length, a continuous concrete bedding, or other approved means. The principal loads imposed on the pipe are positive and negative hydraulic pressures and external compressive pressure from fill material and vehicular surcharge. EM 1110-2-2902 contains procedures for the design of conduits under embankment and backfill loading. Embankment settlement should be considered in the design of the pipe joints. Over-the-levee type pipes are sometimes designed as siphons, using the pumps to establish flow. This introduces an additional design loading consideration. At the levee crest, a negative pressure of up to 1 atmosphere could occur. This load must be combined with the external compressive loads from fill and water. Guidance for siphon design is contained in EM 1110-2-3105. Discharge pipes passing through or under the protection line are pressure pipes and the internal hydraulic pressures are therefore greater than for the over-the--protection line type. When the protection line is a levee, careful attention must be given to insure that no leakage or infiltration is allowed in the pipe or joints which would affect the integrity of the embankment. The materials used in these pipes are ductile iron, steel, concrete pressure pipe, and cast-in-place reinforced concrete. To prevent leakage, steel and ductile iron pipe should be joined with flexible, watertight couplings, and concrete pipe should have alignment collars and waterstops at each joint. Materials used for discharge piping should conform to CEGS-02724 N7. The piping materials should be selected on the basis of strength, durability, and project life economics.

b. Discharge Conduit Gates. A pressure discharge conduit from a pumping station through the protection line must be provided with an emergency closure gate on the river side of the floodwall or levee to prevent backflow into the protected area in case of failure of the pump or rupture of the conduit. For a levee type installation the gate usually will be in a well in the riverside levee slope, accessible from the levee top. When the pumping station is integral with a flood wall, the discharge pipes usually discharge into a surge chamber through flap valves. Stoplogs are usually provided at the end of each pipe and upstream of each pump so that, in the event of a flap valve failure, flow can be stopped in order to prevent flooding of the plant. For a pressure pipe under a flood wall, the gate will

usually be in a well integral with the floodwall. A simple slide gate for the smaller sizes, or wheel-type gate for larger sizes is suitable. On pressure pipes, gates should be designed with operators capable of opening and closing the gates under all head conditions so that flow can be discharged after an interior flood in order to prevent excessive pressure build-up on the gate. Well type gate structures should be constructed of reinforced concrete and designed in accordance with strength design provisions given in EM 1110-2-2502. The design loading conditions will vary with the placement and configuration of the gate structure. A gate well placed on the discharge side of a levee will experience fill loading, uplift and vertical water loads, and possibly rapidly varying pool levels. In most instances it will be required that the gate structure be unwatered for maintenance purposes. The top of the gate structure must be designed to withstand gate operating forces. See EM 1110-2-3105 for further discussion of forces on the gate structure induced by gate operation. In areas of high seismicity, defensive structural layout may dictate that the concrete mass extending above the ground line be kept to a minimum. Restriction of the gate structure projection above the ground line might also be of value in areas subject to high wind loads. These factors must be addressed early in the layout and design process and the configuration of the gate structure must be set based on functional, economic, and technical considerations.

c. Trashracks. All pumping stations should be provided with trashracks at the station intake. These racks are generally constructed of structural steel and are either attached to the face at the forebay side of the structure or inserted into formed slots near the intake face of the substructure. Trashracks should be designed for a minimum of 5 feet of head differential acting toward the pumping station for small to medium sized plants. For larger plants, higher head differentials may occur. This should be addressed in an early design conference and definite design criteria established.

d. Trash Removal. The types of raking devices used to remove trash from the trashracks depends on the size of the plant, frequency of operation, type and size of the pumps, and type of inflow facilities (pipe, open ditch, etc.). When a boom across the inlet channel or other means is used to remove a large portion of the trash before it reaches the intakes, mechanical trash removal devices may not be required. However, for most installations some positive means of trash removal should be provided. This may be done by hand on very small plants, but for medium to large size stations, mechanical trash rakes should be

provided. These trash rakes are manufactured in a variety of configurations, each applying forces to the structure in different ways and to varying degrees. Before final design of the intake area and trash deck is begun, the type of raking system must be determined and these forces identified. In the design of both trashracks and trash raking equipment, durability under adverse operating conditions and harsh environment must be considered. These items should be designed to function dependably with a minimum of maintenance over the life of the station. For the design of various types of trash raking equipment, see EM 1110-2-3105.

e. Trash Deck. For some large plants, the trash deck may be designed for heavy vehicular traffic and can be used as a work area for a truck mounted crane and trash hauling equipment. This arrangement might be used in conjunction with, or in lieu of, conventional trash raking equipment. The method of trash removal and handling should be coordinated early in the design process, and provision for removal of trash from the intake channel and from the trash deck should be considered as a fundamental part of the station layout and design.

f. Contraction Joints. Joints between separate monoliths on large installations, and between the pumping station and adjacent wall sections when the pumping station is located on the protection line, should be contraction joints. Each joint should be constructed in one plane and no reinforcement should be allowed to cross the joint unless required as dowelling for alignment. If alignment dowels are used, they should be firmly fixed in the concrete on only one side of the joint. These joints should be made with no initial separation between adjacent placements except as required near the concrete surfaces to prevent spalling of the corners. This can usually be controlled by using V-grooves at monolith joints. However, in some cases such as a thin wall section abutting the end wall of the pumping station, deeper separation may be desirable.

g. Construction Joints. Reinforced concrete portions of pumping stations may be placed in segments, separated either vertically or horizontally by construction joints. These joints are meant only to facilitate the construction process by dividing the work into manageable units and should be arranged so they will not disrupt the continuity of the structure. In large placements, construction joints can also serve to minimize crack formation. Reinforcing steel should pass through these joints, and surfaces should be cleaned and scoured as necessary to provide good bond between the concrete placements. In very large

mass concrete placements having vertical joints between the first and second placements, it may be expedient to provide keys to assure transfer of stresses across the joints. However, in normal construction this will be accomplished by reinforcement and by bond between concrete surfaces.

h. Waterstops. Waterstops across contraction joints are necessary to prevent leakage and obtain dry operating and working conditions. They exclude water under head in the substructure and ensure weather tightness of the joints in the superstructure. Experience in the use of molded rubber or extruded polyvinyl chloride (PVC) waterstops in joints of conduits and hydraulic structures has proven the practicability and advantages of using these materials. Their superior performance under conditions of differential settlement or lateral displacement make them particularly desirable. Metal waterstops may be used in structures with dependable foundations, but may fail where a yielding foundation results in uneven settlement in adjacent monoliths. A greater width waterstop is required in the substructure where large concrete aggregate is used and high water pressures exist than in low-pressure areas or for sealing against weather only. Waterstops should be placed as near to the surface as practicable without forming weak corners in the concrete that may spall as a result of weathering or impact, and should create a continuous barrier around the protected area. All laps or joints in metal waterstops should be welded or brazed; joints in rubber waterstops should be vulcanized or cemented together, and joints in PVC waterstops should be adequately cemented or heat sealed. Waterstops in contact with headwater for structures founded on rock should terminate in a recess formed by drilling holes a minimum of 18 inches deep into the rock, and should be carefully grouted in place. Occasionally, double waterstops are desirable in pier joints and other important locations, to insure watertightness in case of failure of one of them. For pumping stations located on the protection line, waterstops should be placed between the pumping station and adjacent wall monoliths and should extend from embedment in the foundation, or attachment to a seepage cutoff wall to the nominal top elevation of the protection line.

4-8. Appurtenant Structures and Facilities.

a. Gravity Drainage Structures. A gravity drainage system may be constructed to carry normal runoffs through the protection line. It may be constructed separate from the pumping station or integral with it. The system will consist of an intake structure, discharge conduits, a gate structure, and a stilling basin.

(1) Intake Structure. Where the gravity drainage system is constructed separately from the pumping station structure, it should include an intake structure arranged so that it can be closed off for maintenance of the conduit and for emergencies. This is usually accomplished by stoplogs. Thus the headwall must be designed for the loads imposed by fill placed behind it and for loads on the stoplogs. When there are existing outlet structures on a site or where site space is limited, it may be economical to incorporate the intake for gravity drainage into the pumping station. This will require special gating and careful hydraulic and structural planning and coordination among all affected disciplines throughout the functional layout and design process.

(2) Drainage Conduits. The drainage conduit should be designed according to the provisions of EM 1110-2-2902. The shape of the conduit will be dictated by the height of the overlying fill and the hydraulic capacity and flow characteristics required. A gravity drainage culvert should not generally be designed for pressure flow and should be gated near the discharge end to prevent high reservoir water from flowing back into the protected area. All joints in the gravity conduit should be sealed against seepage and infiltration. This may be done using flexible couplings for metal pipes, steel joint rings with solid-ring rubber gaskets for concrete pressure pipe, or waterstops and seepage rings at each joint in cast-in-place reinforced concrete construction. When a new facility which includes a gravity outlet system is being designed, it may be desirable to provide two or more separate gravity outfall conduits. This will allow one conduit to be dewatered for inspection and maintenance of the conduit and gate structure without completely stopping normal flow during these operations. Common types of conduits used under various conditions of fill height, hydraulic requirements, facility location and importance, etc., include corrugated metal with protective coatings, reinforced concrete, precast prestressed concrete cylinder pipe, and cast--in-place concrete culvert. These will generally provide the most economical and serviceable gravity drainage conduits. However, under certain circumstances other materials may be desirable because of special site specific requirements such as the presence of deleterious chemicals in the soil or water. These other conduit materials may include reinforced plastic masonry (RPM), fiber reinforced plastic (FRP), or certain high strength plastics for pipes in smaller sizes. These types of pipe will usually be much more expensive than the more common types. Also, the performance experience over time may be very limited for some of

these materials. Use of specialized types of pipe must be closely coordinated with higher authority and may require special testing as well as special placement procedures. Generally, reinforced concrete pipe should be used for urban levees and other levees where loss of life or substantial property damage could occur. Corrugated metal pipe (CMP) with protective coating may be used as an option on agricultural levees. When CMP is considered as an option, a life cycle cost study should be done. Generally a minimum of one CMP replacement should be assumed during the life of the project. For further guidance concerning the type of pipe for use in gravity outlet systems, see Appendix C.

(3) Gate Structures. Gravity discharge conduits should be gated so they can be closed against high water in the discharge area. The gates should be located on the discharge side of the protection line as near the conduit outfall as practicable. They should be situated in a gate structure which extends upward over the conduit to a sufficient height to provide dry access to the gate operators from the top of the levee under all operating conditions. This access may be provided by walkway bridge or embankment. Gate structures are usually constructed of reinforced concrete. The types of forces on the structure may vary, but will typically include hydrostatic and lateral earth pressures and uplift loading. Additionally, the top of the structure must be capable of withstanding the forces imposed by the gate operator. The structures should be designed to be unwatered to allow servicing of the closure gates. In certain circumstances it may be expedient to empty the pump discharge piping into the gravity drainage gate structure, thus limiting the length of discharge piping required and negating the need for construction of a second gate structure. This may offer particular advantages where a gravity outlet gate structure already exists. Such an arrangement should be analyzed carefully to assure that the outlet piping and stilling structure are adequate to handle the pumped flow. These layout procedures must be investigated and coordinated among the design elements and with higher authority from the earliest planning stages.

(4) Stilling Basin. At the outlet of the gravity drainage structure, some means of dissipating the discharge energy and protecting the surrounding bed and bank materials against erosion may be required. This may be accomplished by construction of a headwall and stilling basin with block type energy dissipators. This is a special type construction and may vary with each application. However, the design principles are fairly constant. The stilling structure must be designed to

resist hydraulic thrusts imposed by flowing water in addition to the normal horizontal earth, hydrostatic, and uplift loads.

b. Retaining Walls. Walls and footings or slabs of reinforced concrete required to retain fill as a part of a pumping plant installation should be designed according to the provisions of EM 1110-2-2502. These features may be constructed as approach structures immediately upstream of the pumping station or gravity discharge structure, as wing walls adjacent to these inlets, or as simple retaining walls. They may be conventional T-wall sections or may be designed as U-frame structures. In areas of high seismicity, defensive layout measures may dictate that high cantilever walls be avoided where possible and that special treatment (alignment dowelling, etc.) be given to adjacent wall sections and walls abutting larger structures.

CORPS OF ENGINEERS | U. S. ARMY

REVISIONS				
SYM.	ZONE	DESCRIPTION	DATE	APPROVED

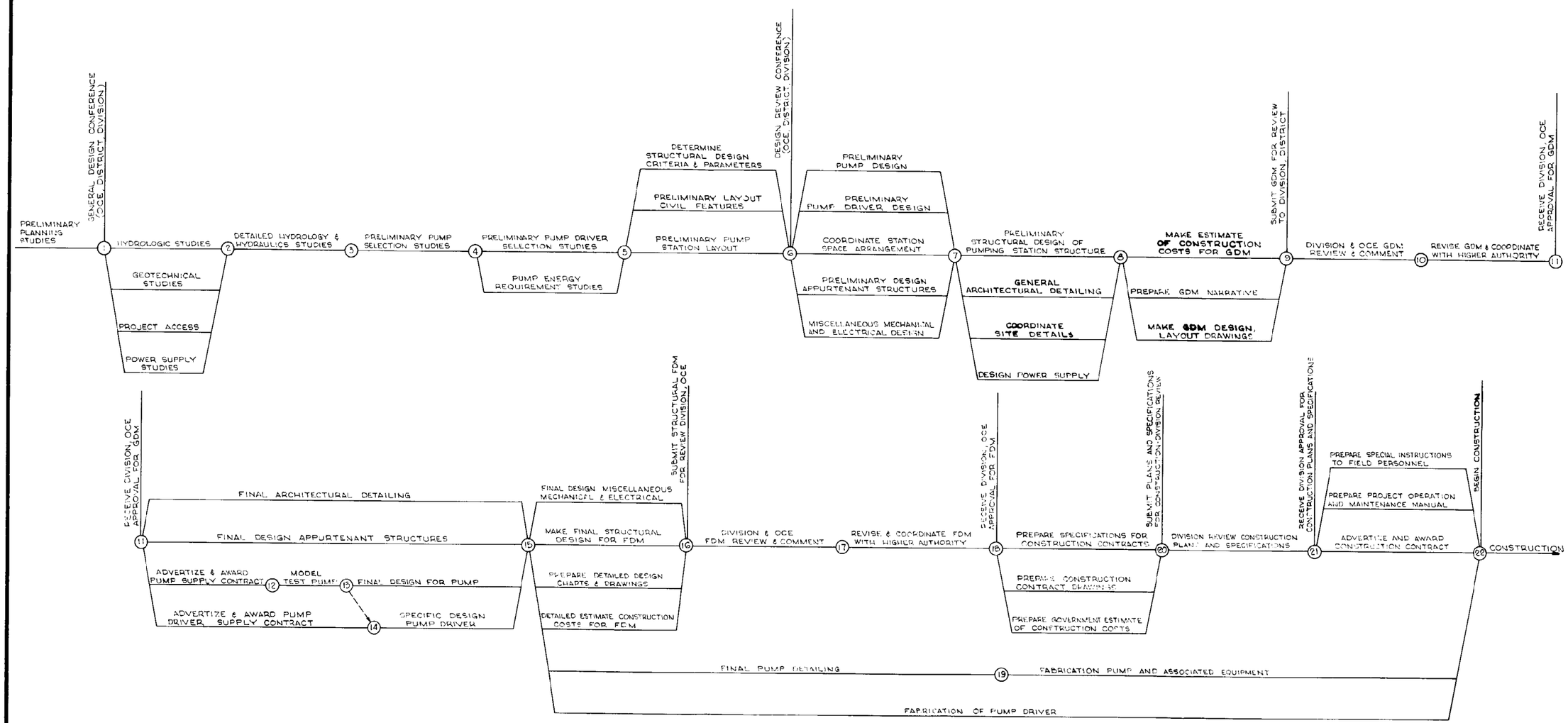

NUMBER, TIMING, AND FREQUENCY OF DESIGN REVIEW CONFERENCES WILL VARY FROM PROJECT TO PROJECT. THIS SHOULD BE AN ITEM FOR DISCUSSION AND RESOLUTION AT THE GENERAL DESIGN CONFERENCE.

THESE CONTRACT ITEMS ARE REQUIRED ON LARGE CUSTOM DESIGNED AND FABRICATED PUMPS ONLY. FOR SMALLER STATIONS STOCK PUMPS AND MOTORS SHOULD BE USED IN THE INTEREST OF ECONOMY IN BOTH SHORT AND LONG TERM.

U.S. ARMY ENGINEER DISTRICT, MOBILE
CORPS OF ENGINEERS
MOBILE, ALA.

EM 1110-2-3104
STRUCTURAL AND ARCHITECTURAL DESIGN OF PUMPING STATIONS

DESIGN NETWORK DIAGRAM

DESIGNED BY: | DRAWN BY: | CHECKED BY: | SUPERVISED BY:
DR. REF. NO. | SPEC. NO. | SIZE | FILE NO. | DRAWING NO. | SCALE: | DATE: | SHEET

PLATE NO. 1

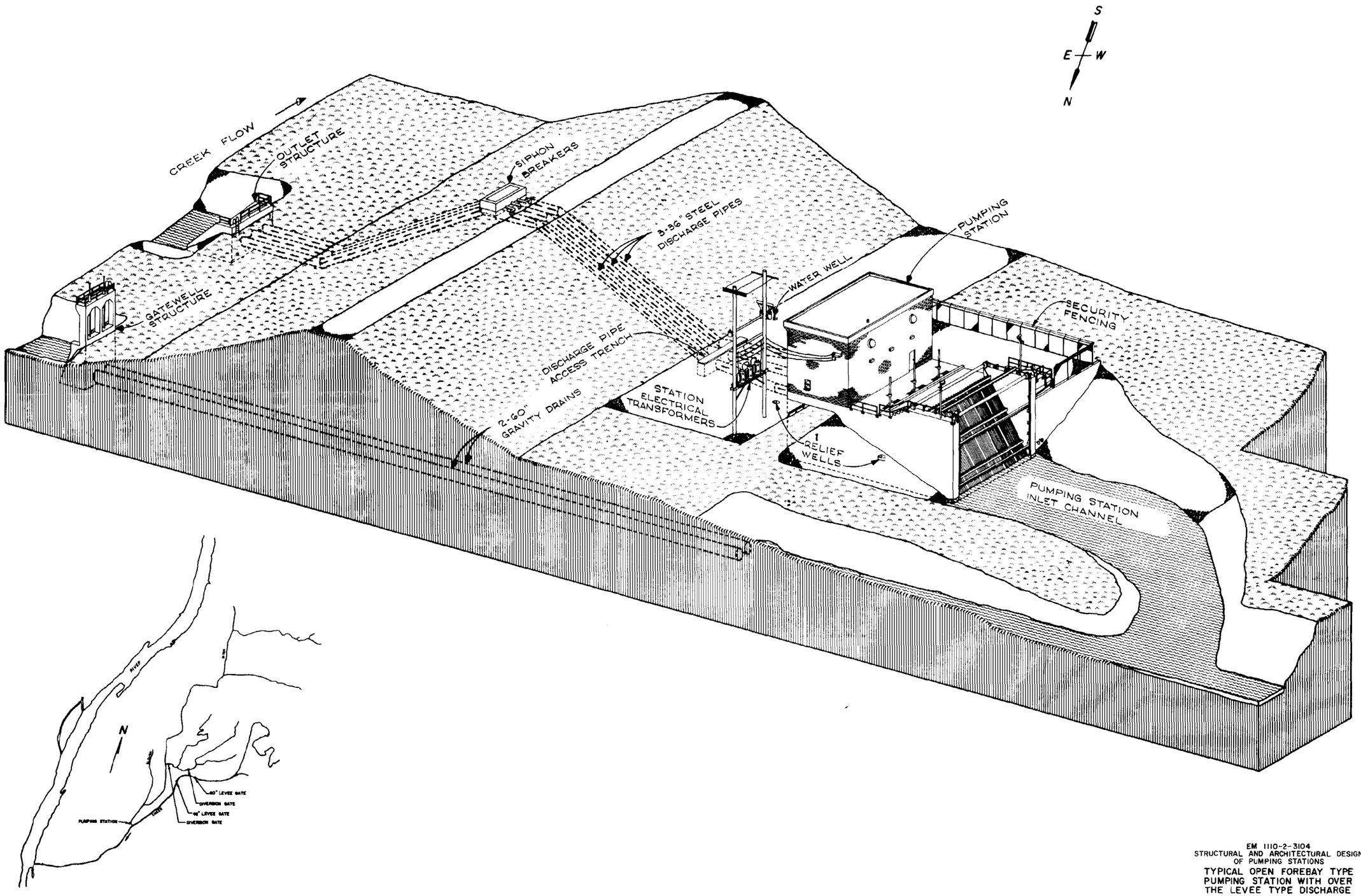

EM 1110-2-3104
STRUCTURAL AND ARCHITECTURAL DESIGN OF PUMPING STATIONS

TYPICAL OPEN FOREBAY TYPE PUMPING STATION WITH OVER THE LEVEE TYPE DISCHARGE

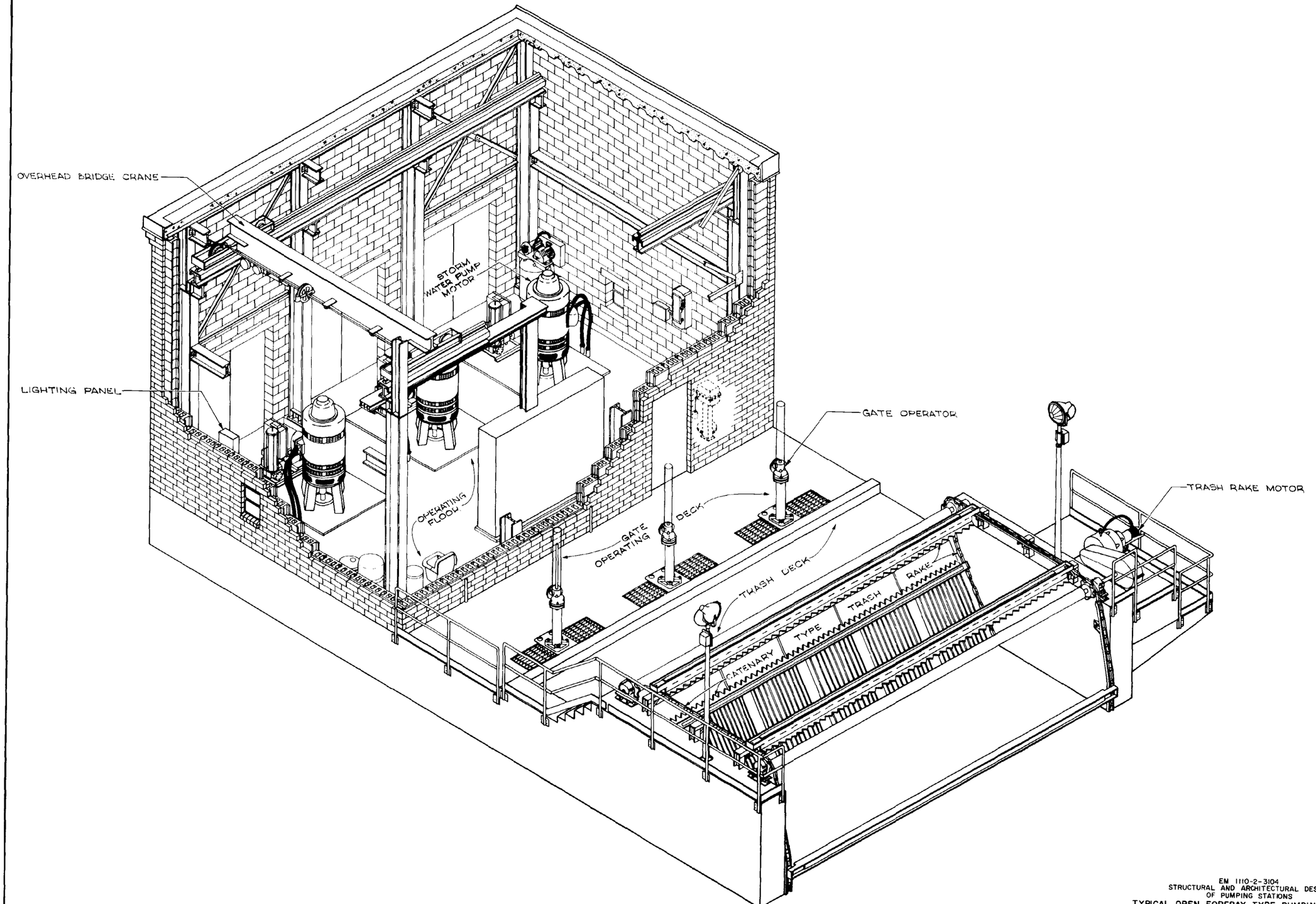

EM 1110-2-3104
STRUCTURAL AND ARCHITECTURAL DESIGN
OF PUMPING STATIONS

TYPICAL OPEN FOREBAY TYPE PUMPING STATION
SUPERSTRUCTURE AND TRASH DECK

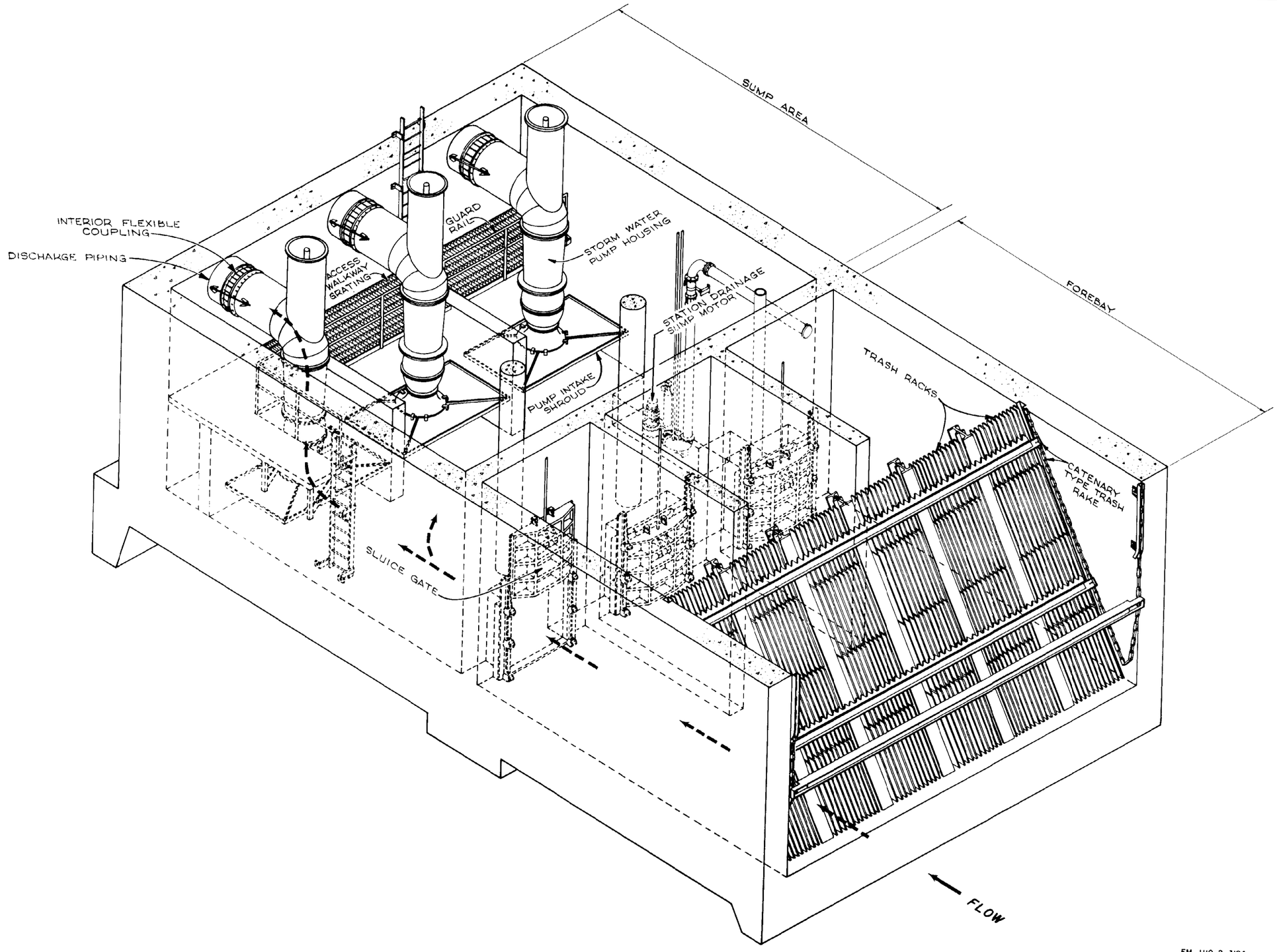

EM 1110-2-3104
STRUCTURAL AND ARCHITECTURAL DESIGN
OF PUMPING STATIONS

TYPICAL OPEN FOREBAY TYPE PUMPING STATION
SUBSTRUCTURE

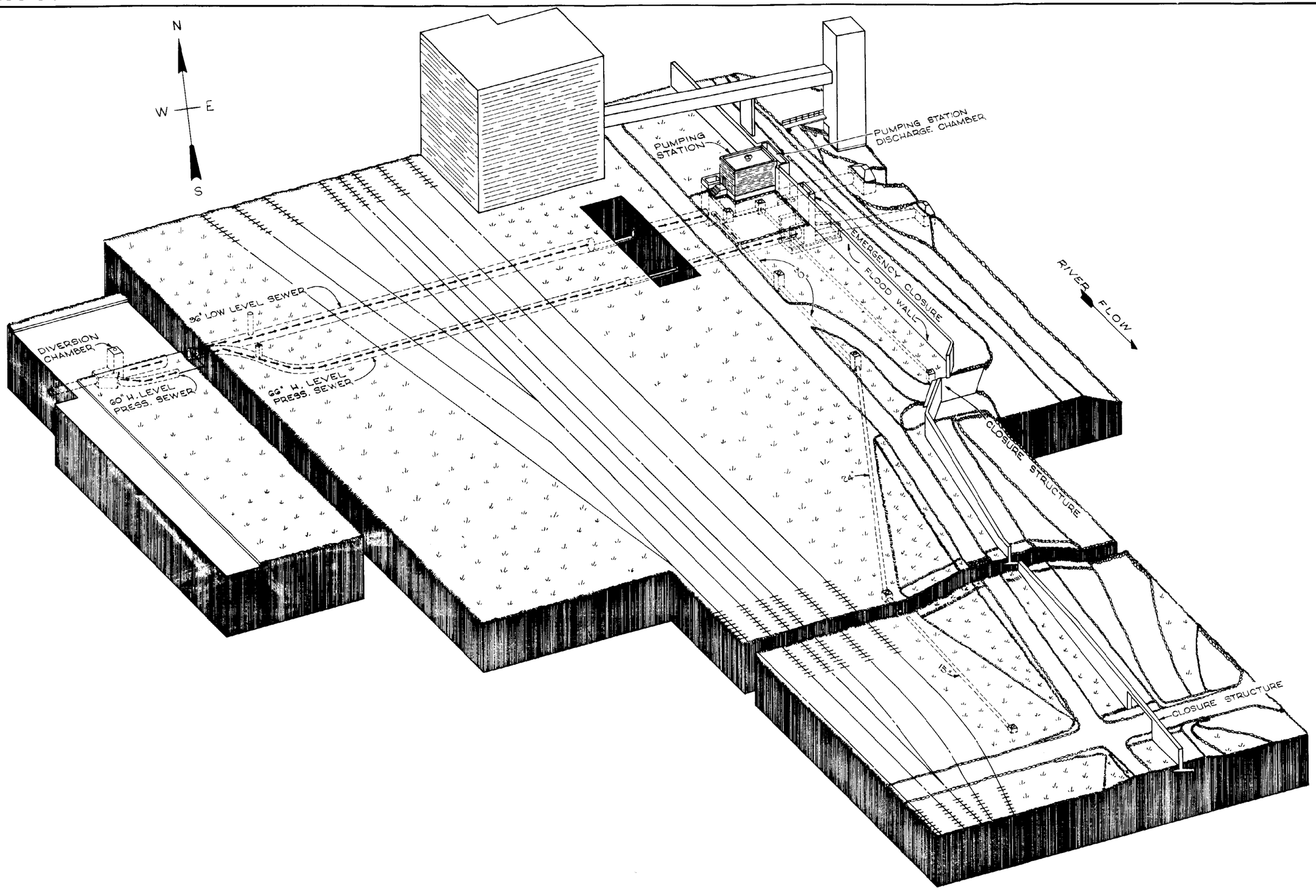

EM 1110-2-3104
STRUCTURAL AND ARCHITECTURAL DESIGN
OF PUMPING STATIONS

URBAN INDUSTRIAL INSTALLATION WITH
FLOODWALL TYPE FLOOD PROTECTION

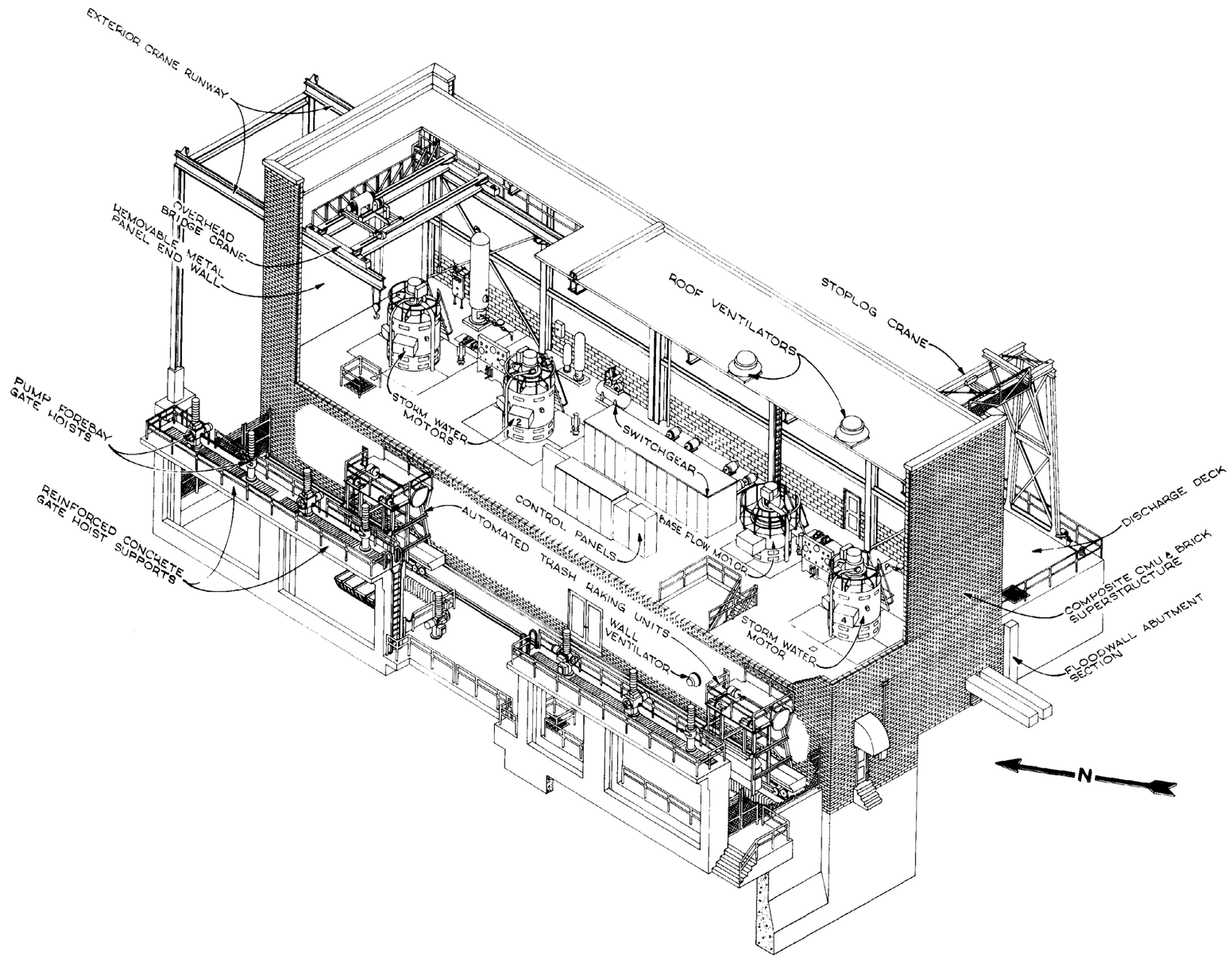

EM 1110-2-3104
STRUCTURAL AND ARCHITECTURAL DESIGN OF PUMPING STATIONS

LARGE URBAN PUMPING STATION
SUPERSTRUCTURE, TRASH DECK
AND OPERATING FLOOR

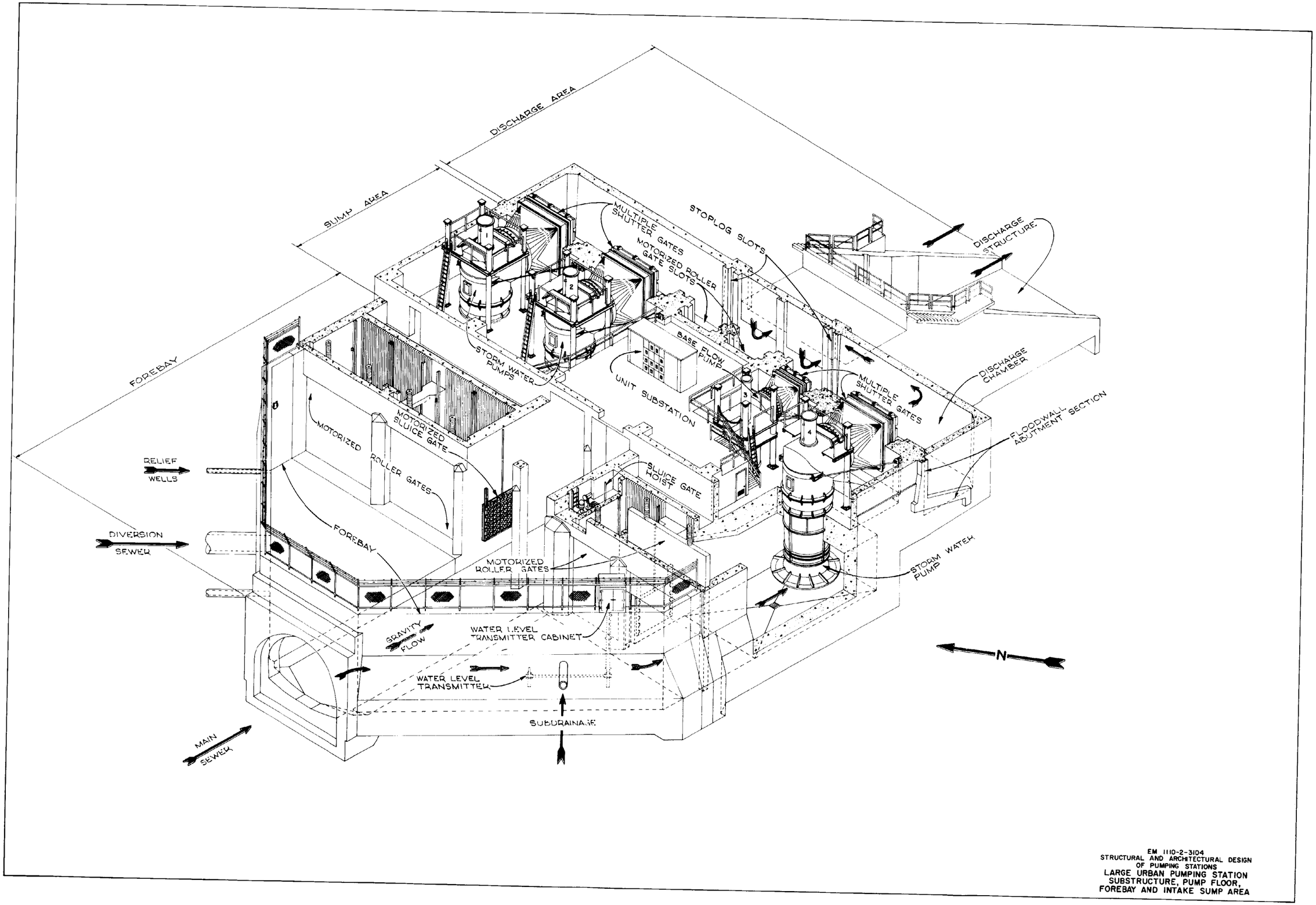

EM 1110-2-3104
STRUCTURAL AND ARCHITECTURAL DESIGN OF PUMPING STATIONS
LARGE URBAN PUMPING STATION
SUBSTRUCTURE, PUMP FLOOR, FOREBAY AND INTAKE SUMP AREA

PLATE NO. 7

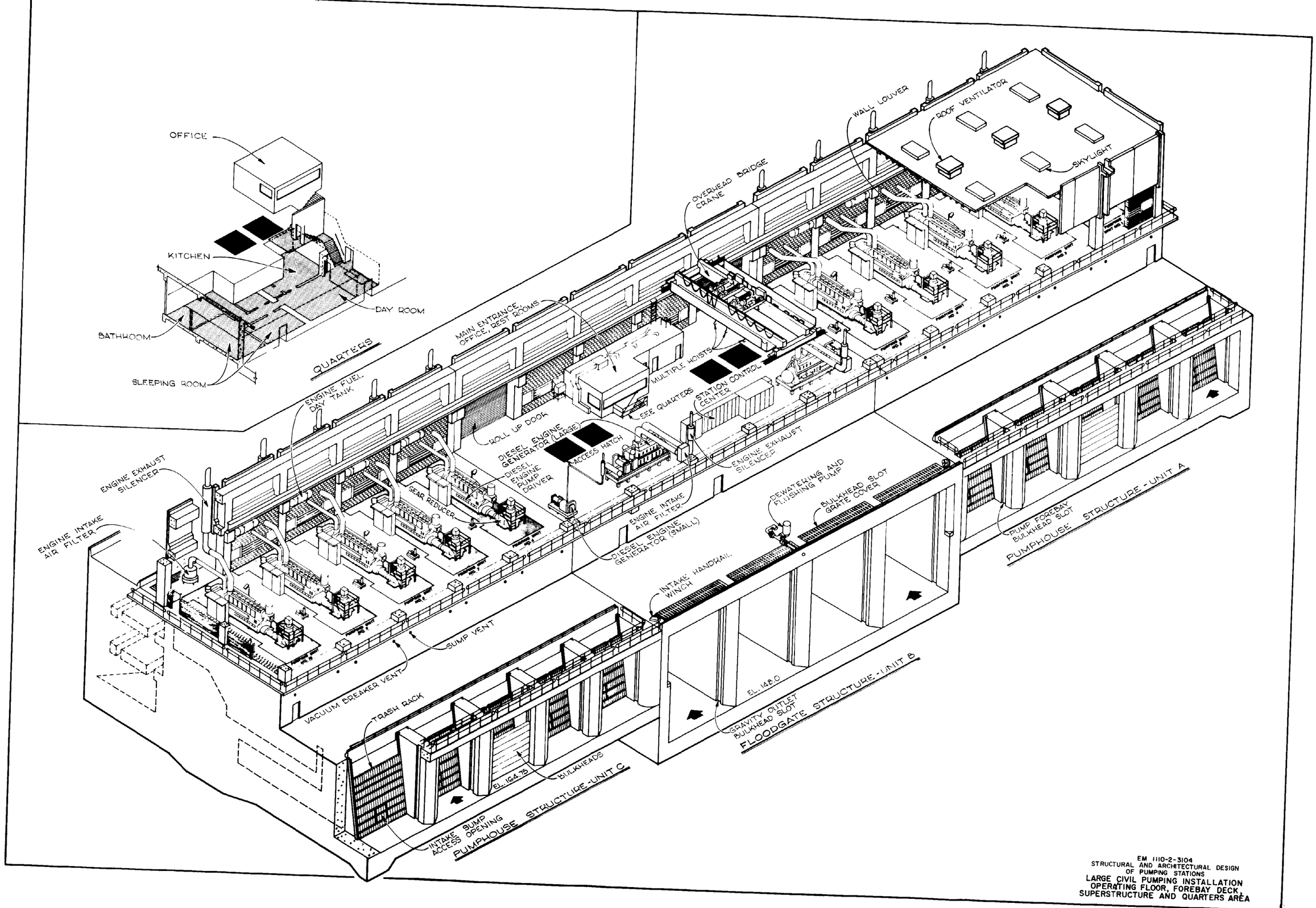

EM 1110-2-3104
STRUCTURAL AND ARCHITECTURAL DESIGN OF PUMPING STATIONS

LARGE CIVIL PUMPING INSTALLATION
OPERATING FLOOR, FOREBAY DECK, SUPERSTRUCTURE AND QUARTERS AREA

PLATE NO. 8

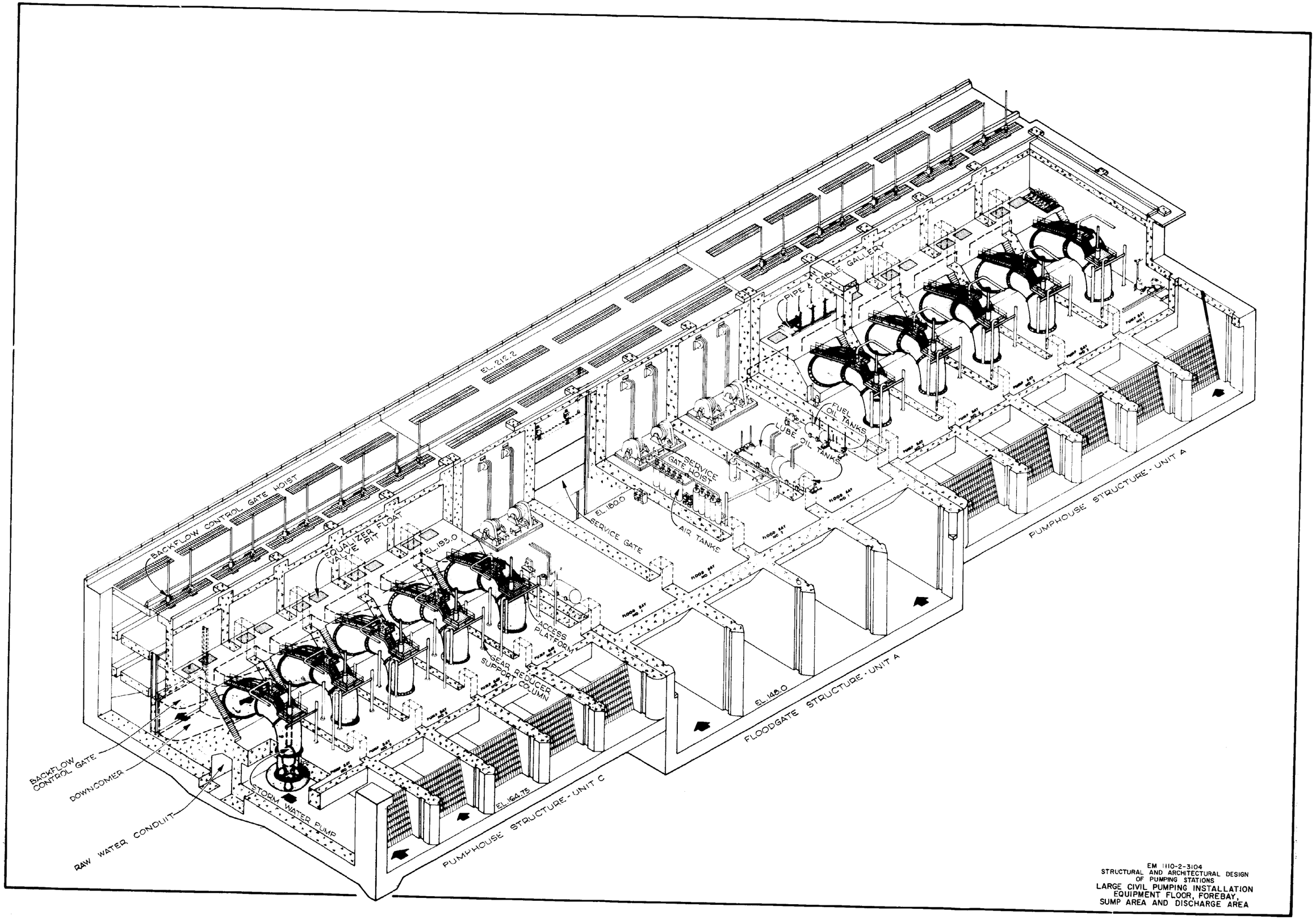

EM 1110-2-3104
STRUCTURAL AND ARCHITECTURAL DESIGN
OF PUMPING STATIONS
LARGE CIVIL PUMPING INSTALLATION
EQUIPMENT FLOOR, FOREBAY,
SUMP AREA AND DISCHARGE AREA