Appendix B
Illustrative Plates

B-1. Illustrative Plates

a. General information and typical details.

Plate No.	Title
B-1.	General Elevation and Sections, Horizontally Framed Miter Gates
B-2.	General Plan and Elevation, Vertically Framed Miter Gates
B-3.	Typical Girder Data, Horizontally Framed Miter Gates
B-4.	Pintle and Recess Geometry, Horizontally Framed Miter Gates
B-5.	Quoin Post, Horizontally Framed Miter Gates
B-6.	Gudgeon Pin Hood, Horizontally Framed Miter Gates
B-7.	Gudgeon Pin Hood Design Data, Horizontally and Vertically Framed Miter Gates
B-8.	Anchorage Links Design Data, Horizontally and Vertically Framed Miter Gates
B-9.	Anchorage Links Gudgeon Pin Barrel, Horizontally and Vertically Framed Miter Gates
B-10.	Design Data on Gudgeon Pin Barrel, Horizontally and Vertically Framed Miter Gates
B-11.	Anchorage Links Design Data, Horizontally and Vertically Framed Miter Gates
B-12.	Embedded Anchorage, Horizontally and Vertically Framed Miter Gates
B-13.	Lower Gate Pintle Assembly, Horizontally Framed Miter Gates
B-14.	Upper Gate Pintle Assembly, Horizontally Framed Miter Gates
B-15.	Top Anchorage Assembly, Horizontally Framed Miter Gates
B-16.	Fixed Pintle Assembly, Horizontally Framed Miter Gates
B-17.	Diagonals, Horizontally and Vertically Framed Miter Gates
B-18.	Quoin and Miter Blocks, Horizontally Framed Miter Gates
B-19.	Walkway and Miter Guide, Horizontally and Vertically Framed Miter Gates
B-20.	Miter Guide, Horizontally Framed Miter Gates
B-21.	Sill Angle and Seals, Horizontally Framed Miter Gates
B-22.	Sill Angle and Seal, Horizontally Framed Miter Gates
B-23.	Quoin and Miter Water Seals, Horizontally Framed Miter Gates
B-24.	Gate Latches, Horizontally and Vertically Framed Miter Gates
B-25.	Upper and Lower Latching Devices, Horizontally Framed Miter Gates
B-26.	Automatic Latching Device, Horizontally Framed Miter Gates
B-27.	Geometry and Forces on Arch, Horizontally Framed Miter Gates
B-28.	Typical Arch Girder, Horizontally Framed Miter Gates
B-29.	Horizontal Arch Diaphragm, Horizontally Framed Miter Gates
B-30.	Quoin Block and Seals, Vertically Framed Miter Gates
B-31.	Miter Seals, Vertically Framed Miter Gates
B-32.	Pintle and Sill Details, Vertically Framed Miter Gates

B-33. Operating Strut Connections, Horizontally and Vertically Framed Miter Gates

B-34. General Plan and Sections, Sector Gates

B-35. General Plan and Elevation, Sector Gates

B-36. Seals and Timber Bumpers, Typical Details, Sector Gates

B-37. Hinge and Pintle Assemblies, Sector Gates

B-38. Alternate Hinge and Pintle Assemblies, Sector Gates

B-39. Emergency Gate Operating Procedure

B-40. General Plan and Elevation, Double Leaf, Vertical-Lift Gates

B-41. General Elevation and Typical Details, Single Leaf, Vertical-Lift Gates

B-42. General Plan and Elevation, Multileaf Gates, Vertical-Lift Gates

B-43. Typical Design Data, Vertical-Lift Gates

B-44. Design Data for End Girders and Support Brackets, Vertical-Lift Gates

B-45. Typical End Frame and Cross Section, Submergible-Type Tainter Gates

B-46. Typical End Frame, Submergible-Type Tainter Gates

B-47. Panama-Type Machine Assembly, Miter Gates

B-48. Modified Ohio Type Machine Assembly, Miter Gates

B-49. Ohio Type Machine Assembly, Miter Gates

B-50. Direct Connected Machine Assembly, Miter Gates

B-51. Gate Strut, Spring Type, Miter Gates

B-52. Strut Assembly, Belleville (Disk) Spring-Type Gate Strut, Miter Gates

B-53. Spring Assembly, Belleville (Disk) Spring-Type Gate Strut, Miter Gates

B-54. Gear-Type Drive Machine, Sector Gate

B-55. Cable-Type Drive Machine, Sector Gate

B-56. Elevation-Hoist Mechanism, Multileaf Vertical-Lift Gate

B-57. General Arrangement, Elevation-Hoist Mechanism, Multileaf Vertical-Lift Gates

B-58. Hoisting Mechanism, Sections, Vertical-Lift Gates

B-59. Hoisting Mechanism, Elevation, Vertical-Lift Gates

B-60. Hoisting Mechanism, Tainter-Type Gates

B-61. Hydraulic System Schematic, Manually Operated, Constant Displacement Pumps

B-62. Hydraulic System Schematic, Solenoid Operated, Variable Displacement Pumps

B-63. Hydraulic System Schematic, Solenoid Pilot Operated for Inundated Locks, Variable Displacement Pumps

B-64. Electrical System, Single Line Diagram

B-65. Electrical System, Control Schematics

B-66. Electrical System, Valve/Gate Control Schematic, (Sheets 1-5)

B-67. Electrical System, Gate Limit Switch Location, (Sheets 1 and 2)

B-68. Electrical System, Miter Gate Latch

B-69. Electrical System, Control Console Layout

B-70. Electrical System, Backup Control Console

B-71. Electrical System Control Schematic, Miter Gates, Single-Speed Motor

B-72. Electrical System Control Schematic, Miter Gates, Two-Speed Motor

B-73. Electrical System Control Schematic, Vertical-Lift Gate, Emergency Type

B-74. Control Diagram, Tainter-Type Lock Gates

B-75. Lock Cathodic Protection, Upper Miter Gate, Upstream Elevation

B-76. Lock Cathodic Protection, Upper Miter Gate, Downstream Elevation

B-77. Lock Cathodic Protection Details

B-78. Lock Cathodic Protection Details

b. Mechanical design data and sample computations.

B-79. Miter Gates, Ohio River Linkage (Sheets 1-12)

B-80. Miter Gates, Panama Canal Linkage (Sheets 1-13)

B-81. Sector Gates, Effects of Reverse Head on Closing Pintle Torque

B-82. Sector Gates, Determination of Total Pintle Torque (Sheets 1-3)

B-83 through
B-86. Miter Gates, Gate Torque Curves, for Ohio, Modified Ohio, and Panama Canal Linkage

B-87. Miter Gates, Direct Connected Cylinder (Sheets 1-10)

B-88. Vertical Lift Gates, Determination of Loads for Upstream Leaf (Sheets 1-9)

B-89. Vertical Lift Gates, Determination of Loads for Downstream Leaf (Sheets 1-19)

B-90. Vertical Lift Gates, Design of Wheels (Sheets 1-8)

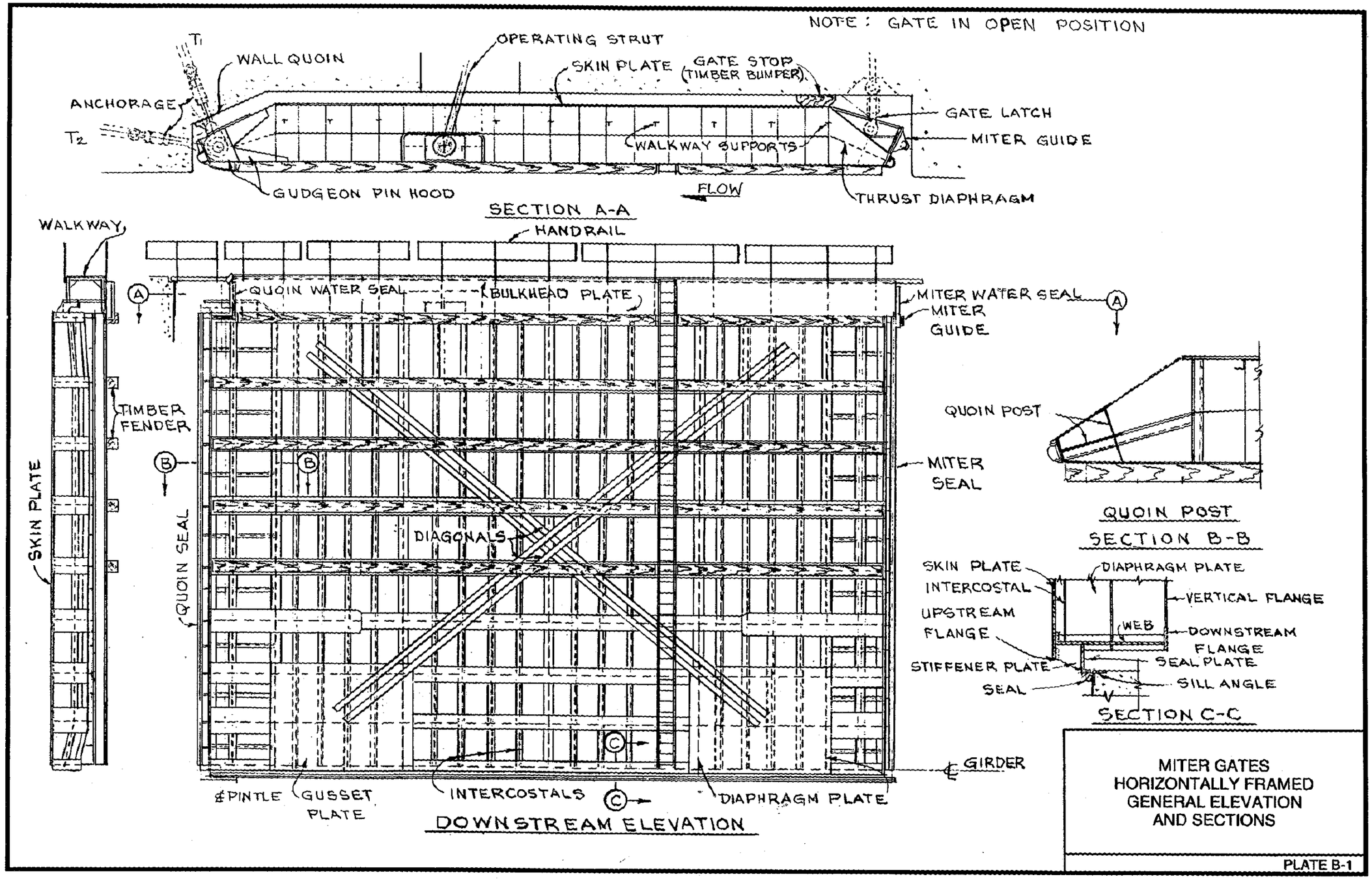

MITER GATES
HORIZONTALLY FRAMED
GENERAL ELEVATION
AND SECTIONS

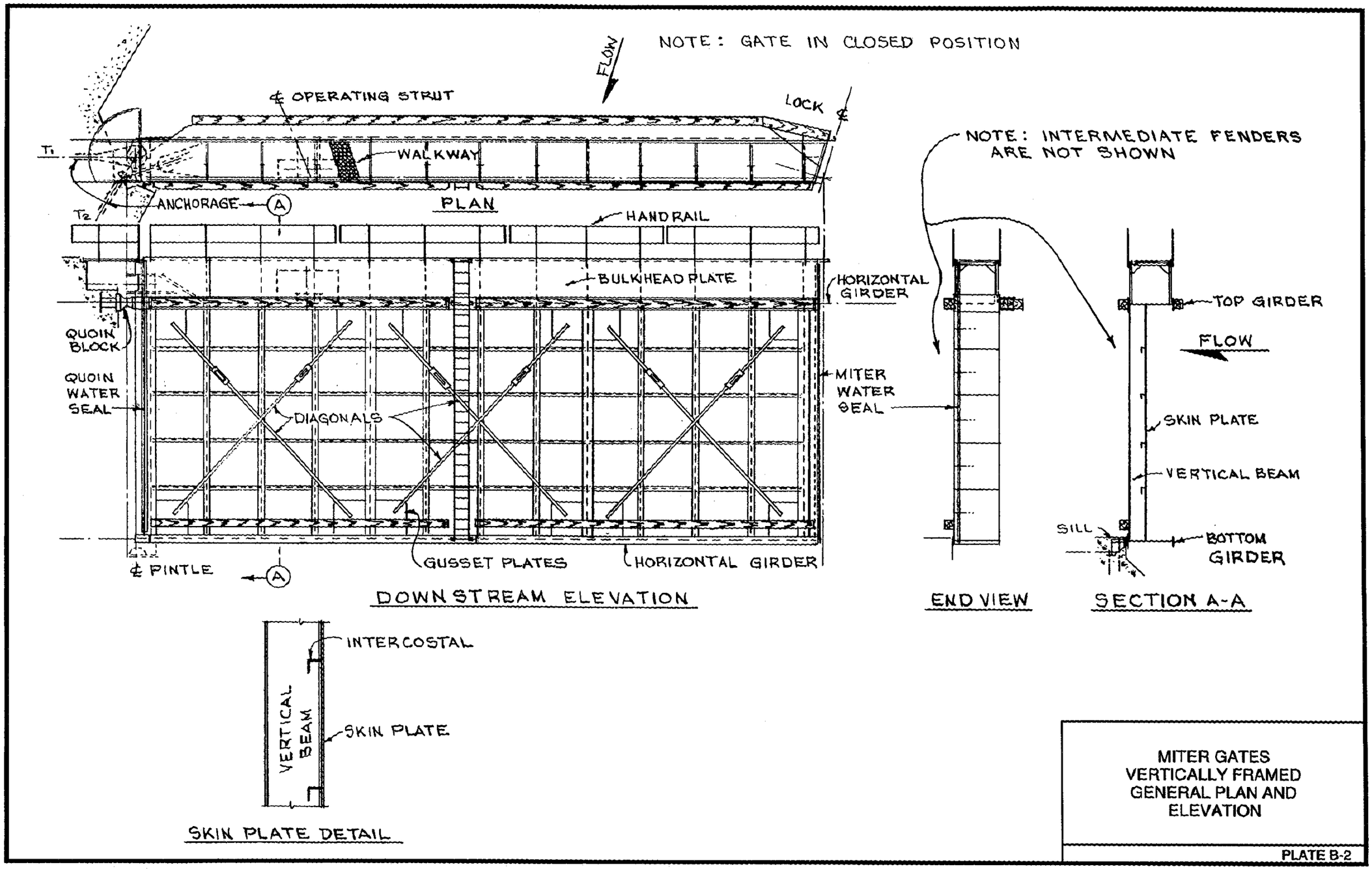

MITER GATES
VERTICALLY FRAMED
GENERAL PLAN AND
ELEVATION

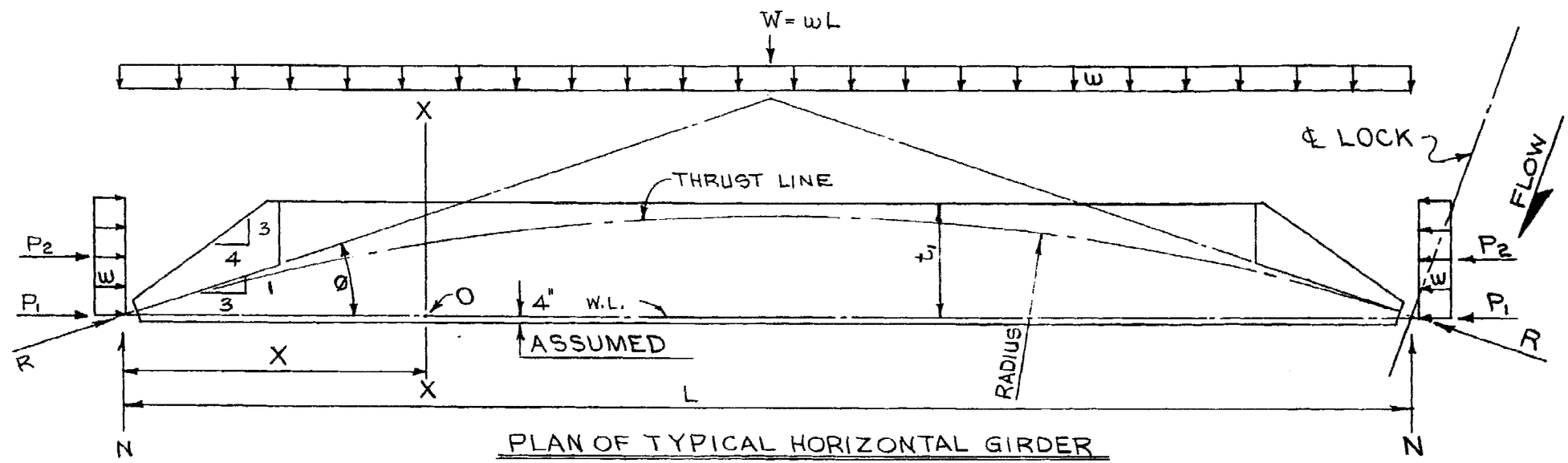

PLAN OF TYPICAL HORIZONTAL GIRDER

WITH A MITER SLOPE OF 1L ON 3T

L = LENGTH OF LEAF, CONTACT TO CONTACT, IN FEET

t_1 = DISTANCE FROM WORK LINE (W.L.) TO OUTSIDE OF DAMMING SURFACE, IN FEET

ω = WATER LOAD PER LINEAR FOOT

MOMENT IN GIRDER $= M_x = \left[N(x) - \omega\frac{(x)^2}{2}\right] + \left[P_2 \times \frac{t_1}{2}\right]$ @ POINT O

$M_{℄} = N\left(\frac{L}{2}\right) - \frac{\omega(L)^2}{8} + P_2\left(\frac{t_1}{2}\right)$; $e' = \frac{M}{P} \times 12$; $e = e' + (4.0 + D.S.\ ℄\ t) - C_1$ (e' AND e IN INCHES)

$f_a = \frac{P}{A}$; $f_b = \frac{Pe}{S}$

THE SIGN OF e INDICATES WHETHER THE UPSTREAM OR DOWNSTREAM FLANGE IS IN COMPRESSION

(+) U.S. FLANGE IN COMPRESSION, (−) D.S. FLANGE IN COMPRESSION

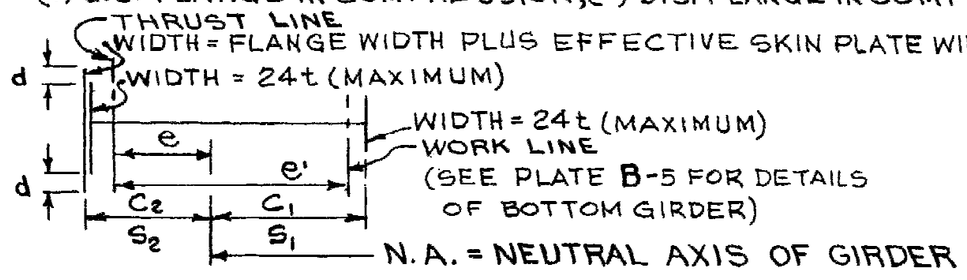

$W = \omega L$
$R = 1.58W$
$N = 0.50W$
$P_1 = 1.5W$
$P_2 = t_1 W/L$
$P = P_1 + P_2$
L = LONGITUDINAL
T = TRANSVERSE
t = FLANGE THICKNESS
S_1, S_2 = SECTION MODULUS.

MITER GATES
HORIZONTALLY FRAMED
TYPICAL GIRDER DATA

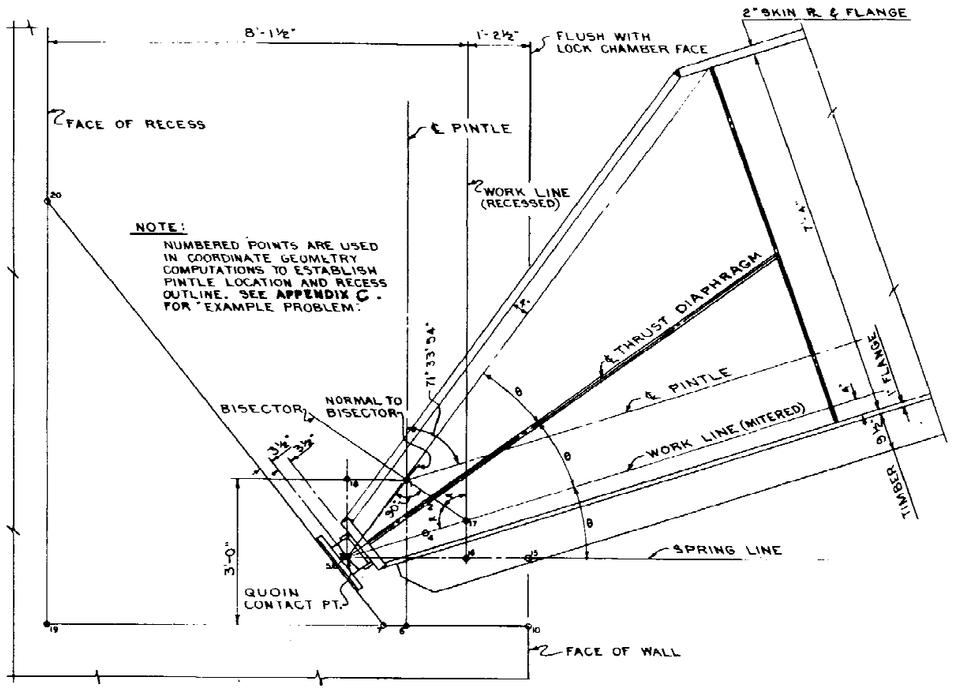

TAPERED END SECTION LAYOUT
SCALE: 1" = 1'-0"

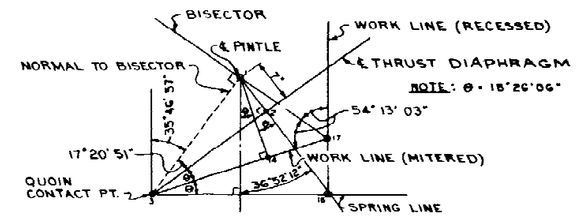

GEOMETRY FOR LOCATING PINTLE
SCALE: 1½" = 1'-0"

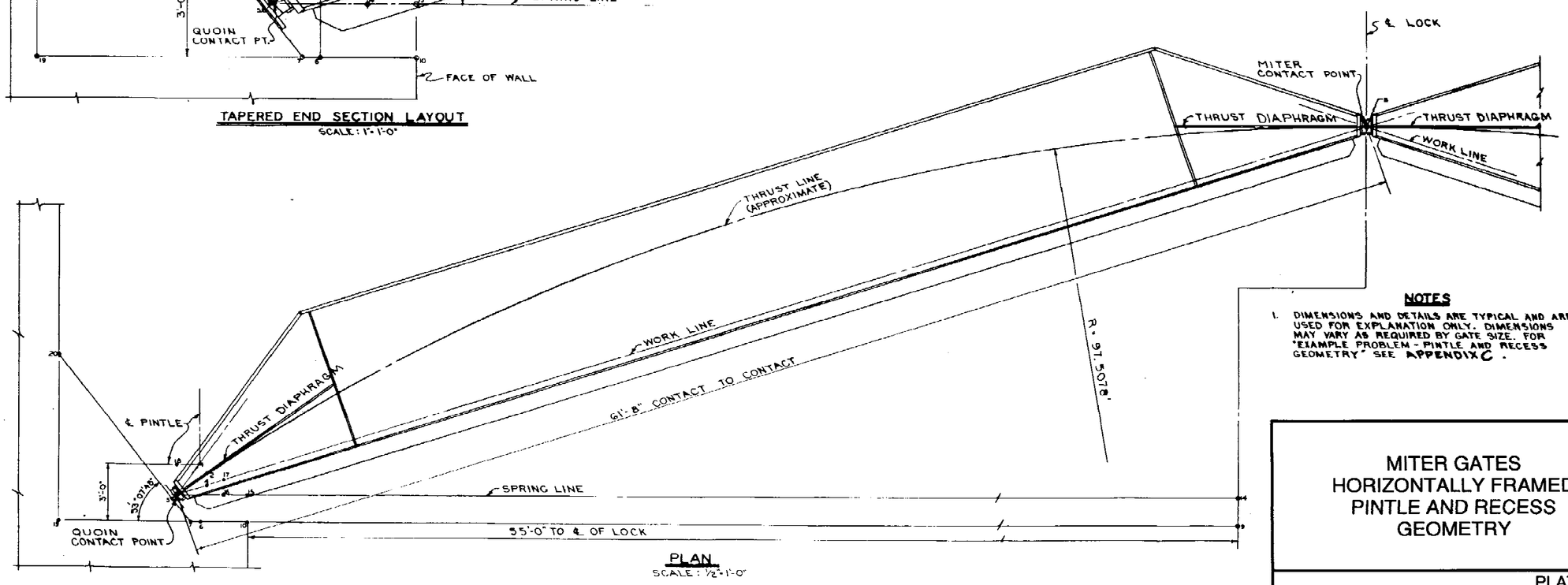

PLAN
SCALE: ½" = 1'-0"

NOTES

1. DIMENSIONS AND DETAILS ARE TYPICAL AND ARE USED FOR EXPLANATION ONLY. DIMENSIONS MAY VARY AS REQUIRED BY GATE SIZE. FOR "EXAMPLE PROBLEM - PINTLE AND RECESS GEOMETRY" SEE APPENDIX C.

MITER GATES
HORIZONTALLY FRAMED
PINTLE AND RECESS
GEOMETRY

QUOIN POST

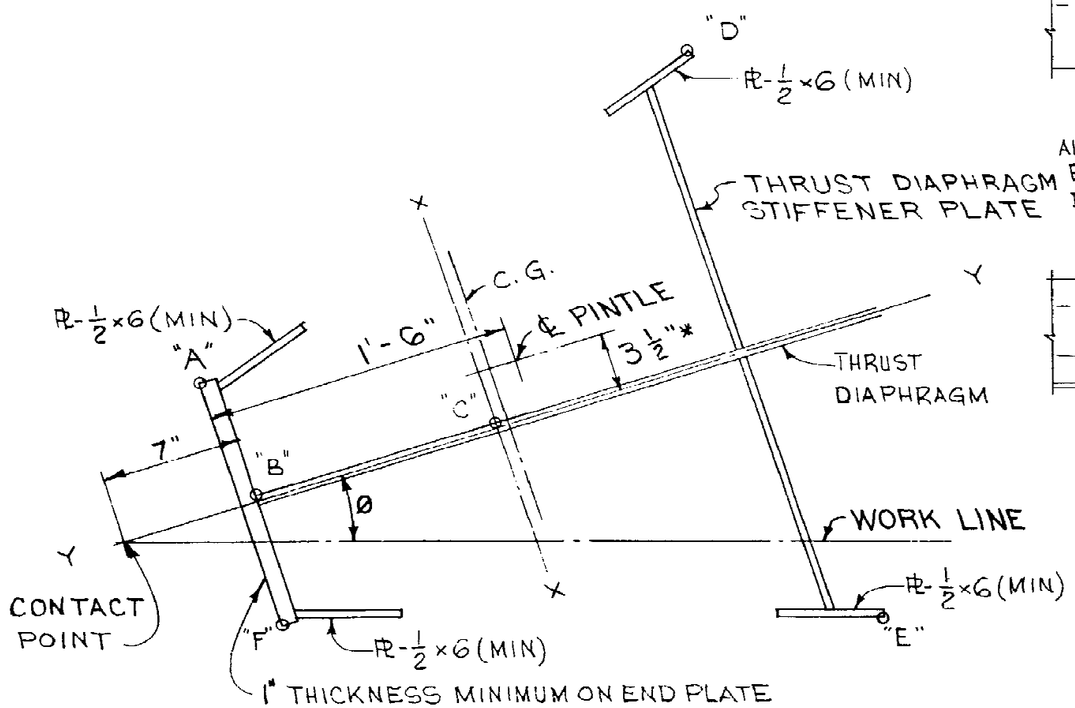

WIDTH OF END PLATE IS THE WIDTH OF WEB PLUS THE FLANGES, PLUS ¼" EXTENSION ON EACH SIDE (FOR WELDING)

GIRDER FLANGE DATA

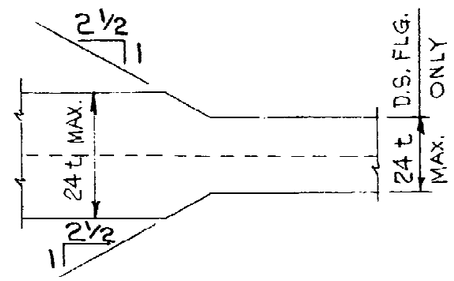

ALL GIRDERS EXCEPT BOTTOM BOTH UPSTREAM AND DOWNSTREAM FLANGES

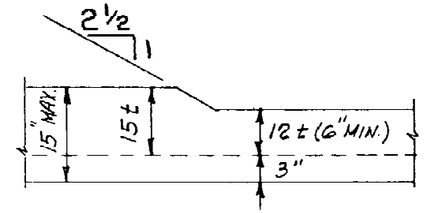

BOTTOM GIRDER DOWNSTREAM FLANGE (OPTIONAL TO PROVIDE ADDITIONAL CLEARANCE TO SILL)

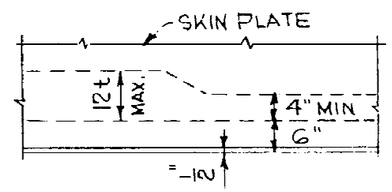

BOTTOM GIRDER UPSTREAM FLANGE

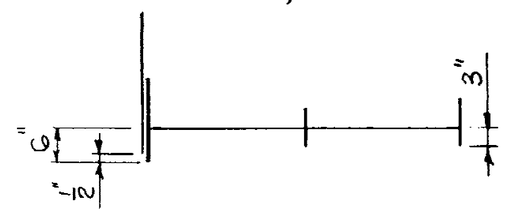

SECTION THROUGH BOTTOM GIRDER

* NOTE "A"
THE ECCENTRICITY OF CENTER LINE OF PINTLE RELATIVE TO THE THRUST LINE AS SHOWN IS FOR AN EXISTING GATE. AN ECCENTRICITY OF 7" IS RECOMMENDED FOR NEW CONSTRUCTION. ALSO SEE CHAPTER 2, PAR. 2-1h.

MITER GATES
HORIZONTALLY FRAMED
QUOIN POST AND TYPICAL
DATA FOR GIRDER FLANGES

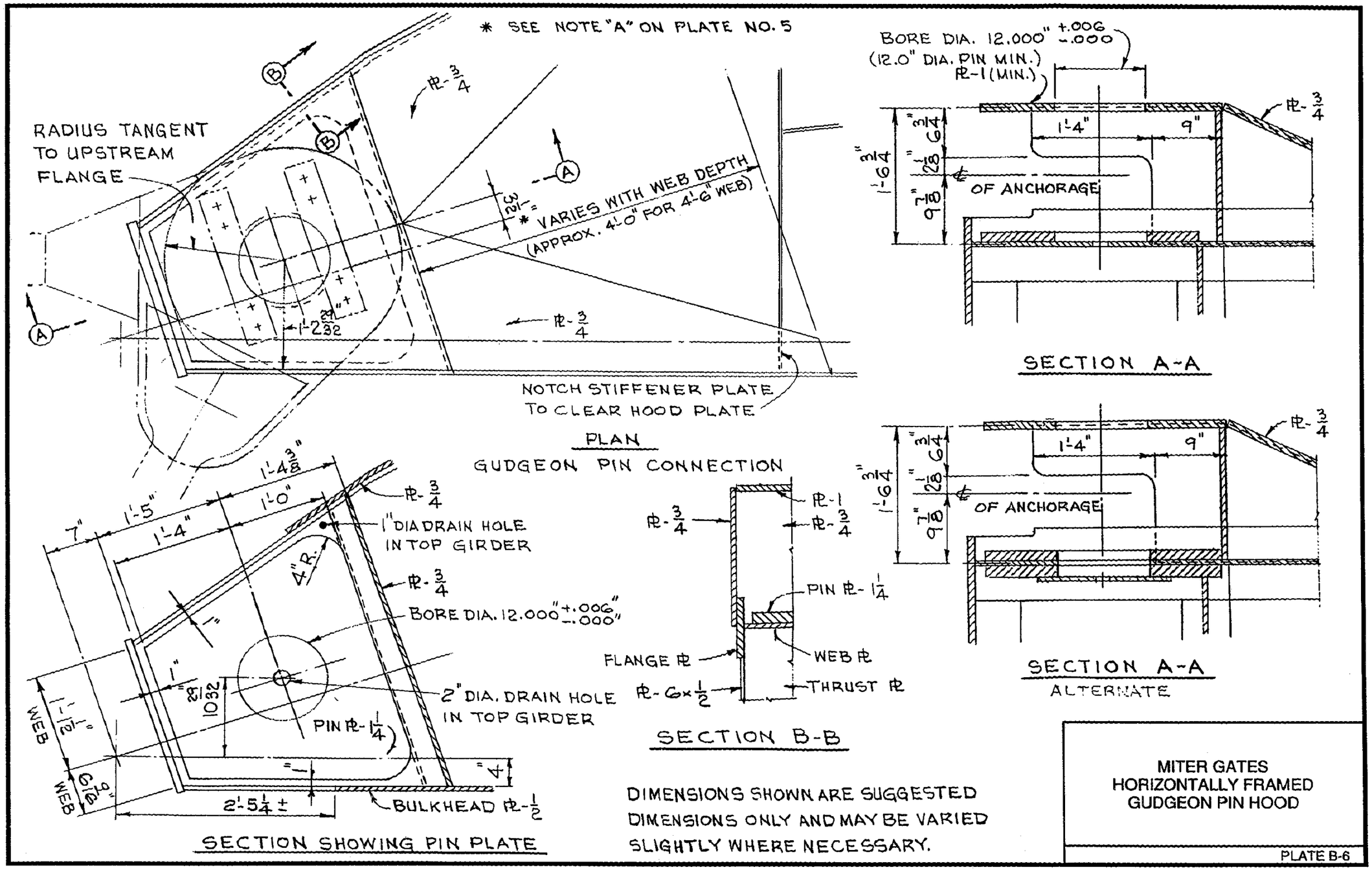
* SEE NOTE "A" ON PLATE NO. 5
RADIUS TANGENT TO UPSTREAM FLANGE
PL-3/4
* VARIES WITH WEB DEPTH (APPROX. 4'-0" FOR 4'-6" WEB)
1'-2 29/32"
NOTCH STIFFENER PLATE TO CLEAR HOOD PLATE
PLAN
GUDGEON PIN CONNECTION
BORE DIA. 12.000" +.006 -.000
(12.0" DIA. PIN MIN.)
PL-1 (MIN.)
1'-4"
9"
OF ANCHORAGE
SECTION A-A
1'-4 3/8"
1'-5"
1'-0"
7"
1" DIA DRAIN HOLE IN TOP GIRDER
4" R.
BORE DIA. 12.000" +.006" -.000"
2" DIA. DRAIN HOLE IN TOP GIRDER
PIN PL-1 1/4
WEB
BULKHEAD PL-1/2
2'-5 1/4 ±
SECTION SHOWING PIN PLATE
PL-1
PIN PL-1 1/4
FLANGE PL
WEB PL
THRUST PL
PL-6x1/2
SECTION B-B
SECTION A-A
ALTERNATE
DIMENSIONS SHOWN ARE SUGGESTED DIMENSIONS ONLY AND MAY BE VARIED SLIGHTLY WHERE NECESSARY.
MITER GATES
HORIZONTALLY FRAMED
GUDGEON PIN HOOD
PLATE B-6

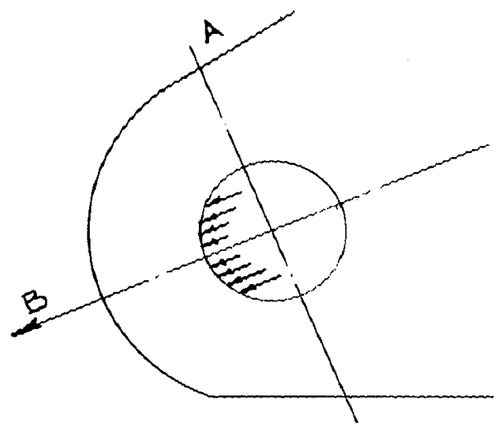

PLAN OF GUDGEON PIN HOOD

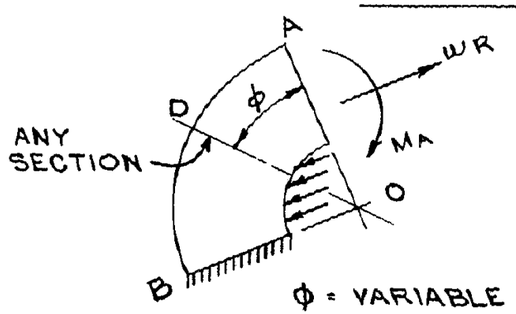

UNIFORM LOAD

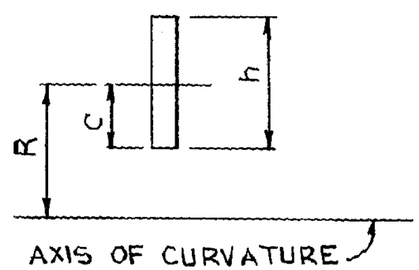

FROM: "ADVANCED MECHANICS OF MATERIALS" BY SEELY AND SMITH (1952)
2ND EDITION, PAGE 183

a = AREA OF SECTION

d = MEAN DIAMETER OF RING $\qquad \omega$ = UNIT LOAD

W = TOTAL VERTICAL LOAD $\qquad \frac{1}{2}P = \omega R$

y = DISTANCE FROM CENTROIDAL AXIS, (y) IS NEGATIVE TOWARD THE INNER FACE AND POSITIVE TOWARD THE OUTER FACE

$R = d/2$

MOMENT

$$M_A = \frac{1}{16} Wd \qquad M_B = -\frac{Wd}{16}$$

STRESS

$$S = \frac{\frac{1}{2} P \cos\phi}{a} + \frac{M}{aR}\left(1 + \frac{1}{Z}\,\frac{y}{R+y}\right)$$

$$\text{FACTOR OF } Z = (-)\,1 + \frac{R}{h}\left[\log_e\left(\frac{R+c}{R-c}\right)\right]$$

MITER GATES
HORIZONTALLY AND
VERTICALLY FRAMED
GUDGEON PIN HOOD
DESIGN DATA

ANCHORAGE LINKS

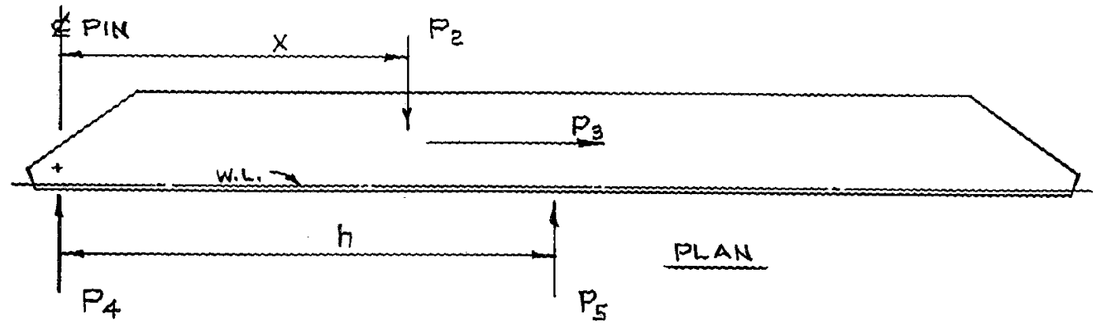

PLAN

$P_5 = \frac{X(P_2)}{h}$

$P_4 = P_2 - P_5$

P_2 = STRUT FORCE COMPONENT PERPENDICULAR TO THE WORK LINE OF THE LEAF
P_3 = STRUT FORCE COMPONENT PARALLEL TO THE WORK LINE OF THE LEAF
P_4 = REACTION OR APPLIED FORCE CREATED BY P_2
P_5 = WATER RESISTANCE ON LEAF
X = 20'-0" FOR 110'-0" LOCKS WITH "PANAMA CANAL" TYPE MACHINE
h = LENGTH OF LEAF MINUS DISTANCE FROM CONTACT TO PINTLE, DIVIDED BY 2
V = VERTICAL DISTANCE BETWEEN PIN REACTION AND PINTLE REACTION

MAXIMUM FORCE ON GUDGEON PIN

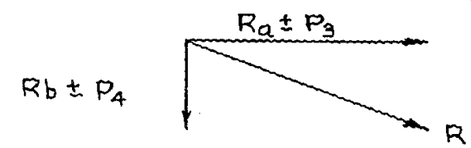

FORCE ON PIN = R + 10% IMPACT

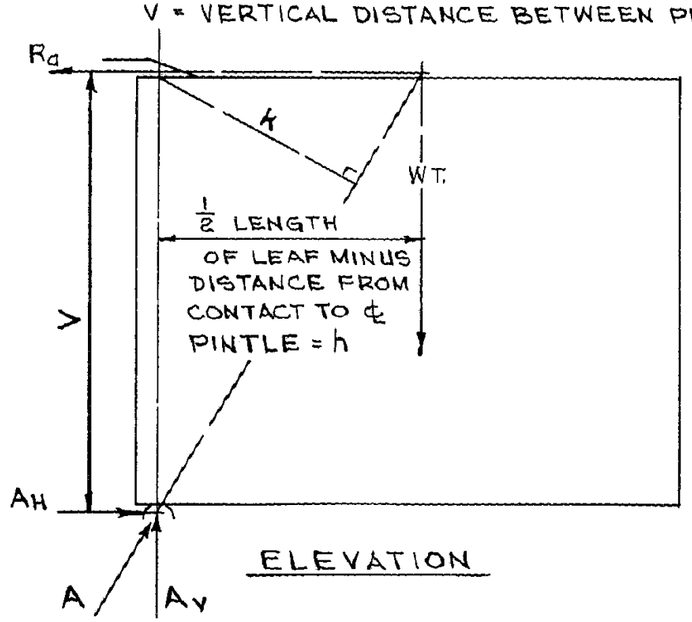

ELEVATION

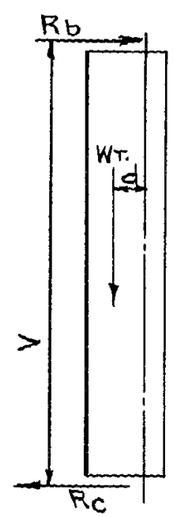

END VIEW

$R_a = \frac{WT. \times h}{V}$

WEIGHT MAY INCLUDE ICE AND MUD LOAD IF APPROPRIATE

d = DISTANCE FROM CENTER OF GRAVITY OF LEAF TO CENTER LINE OF PINTLE

$R_b = \frac{WT. \times d}{V}$

D.S. SIDE

LOAD ON PINTLE DUE TO WT:

$A = \frac{WT. \times h}{k} = \sqrt{A_V^2 + A_H^2}$

A_V = WT.

$A_H = R_a$

MITER GATES
HORIZONTALLY AND
VERTICALLY FRAMED
ANCHORAGE LINKS
DESIGN DATA

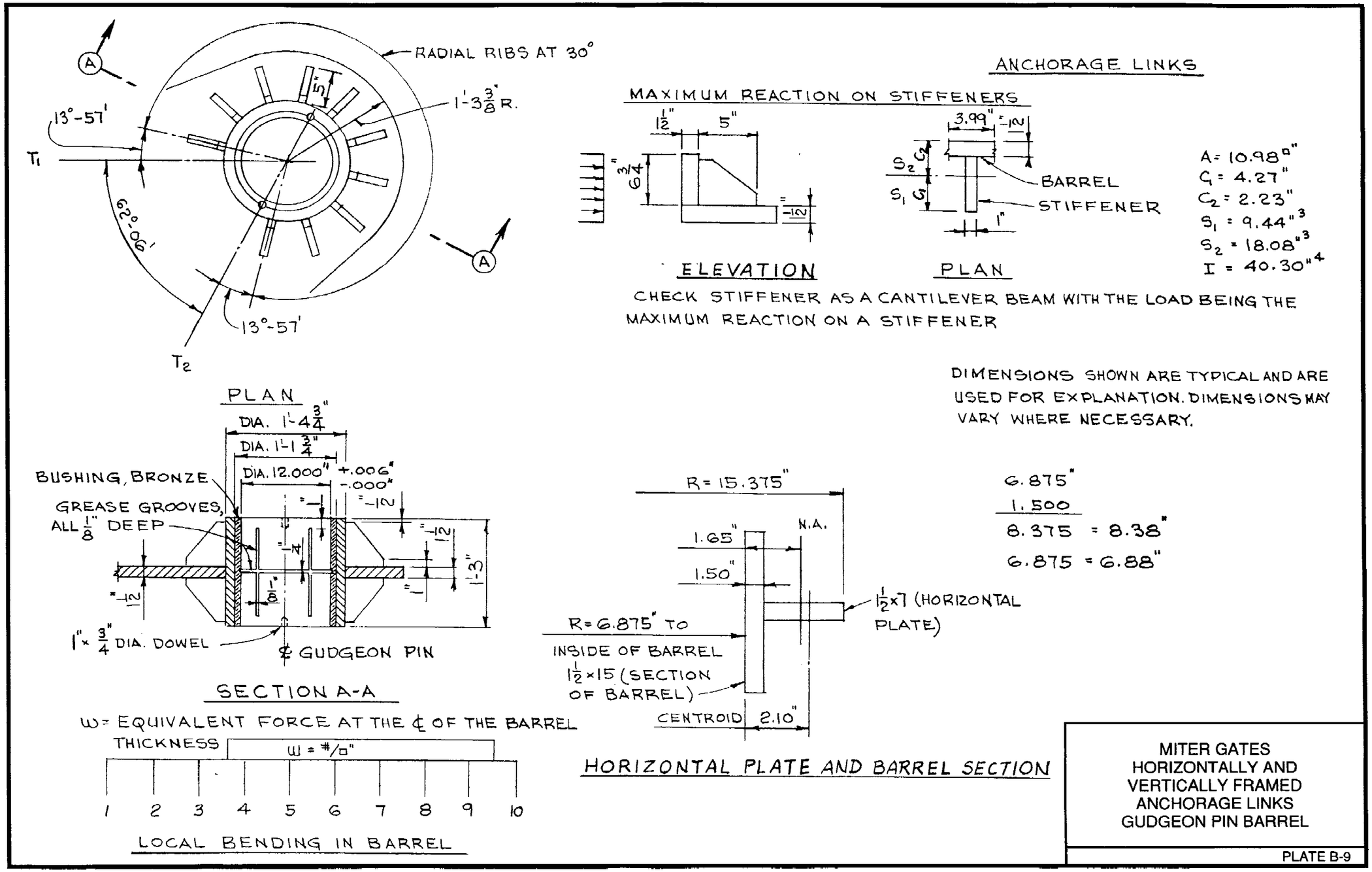

MITER GATES
HORIZONTALLY AND
VERTICALLY FRAMED
ANCHORAGE LINKS
GUDGEON PIN BARREL

ANCHORAGE LINKS

ALTERNATE METHOD OF PIN BARREL ANALYSIS

ASSUME THE COMPOSITE SECTION OF THE BARREL AND HORIZONTAL PLATE ACTS AS A CURVED BEAM WITH A UNIFORM LOADING ACROSS THE DIAMETER. (WHERE R IS TO THE CENTROID, AND D = 2R)

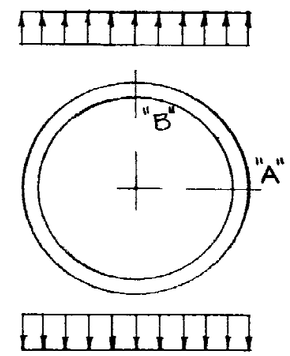

SEE "ADVANCED MECHANICS OF MATERIALS", SEELY & SMITH, (1952) 2ND. ED.

MA AND MB ARE MAXIMUM MOMENTS $M_A = -M_B$

$$M_A = \frac{\omega R^2}{4} = \frac{Wd}{16}$$

MAX. STRESS = (DIRECT TENSION) + (CURVED BEAM STRESS)

(POINT A, INSIDE FACE) + (LOCAL BENDING IN BARREL)

r_o = RADIUS TO NEUTRAL AXIS

$$r_o = \frac{A}{\int \frac{dA}{r}} = \frac{(7\times 1\tfrac{1}{2}) + (15\times 1\tfrac{1}{2})}{15\int_{6.88}^{8.38}\frac{dr}{r} + 1.5\int_{8.38}^{15.38}\frac{dr}{r}}$$

$$r_o = \frac{33.0}{\left(15 \times \log_e \frac{8.38}{6.88}\right) + \left(1.5 \log_e \frac{15.38}{8.38}\right)} = 8.53''$$

Y = DISTANCE FROM NEUTRAL AXIS TO THE POINT OF STRESS

$$M = \frac{SR}{Y}\int (r - r_o)\,dr \qquad S = \frac{MY}{R\int (r - r_o)\,dr}$$

$$S = \frac{MY}{R\left[\underbrace{15}_{\text{WIDTH OF BARREL}}\underbrace{\int_{6.88}^{8.38} r\,dr}_{(171.68)} - \underbrace{127.95}_{\text{WIDTH}\times r_o}\underbrace{\int_{6.88}^{8.38} dr}_{(-191.93)} + \underbrace{1.5}_{\text{WIDTH OF HORIZONTAL PL}}\underbrace{\int_{8.38}^{15.38} r\,dr}_{(124.74)} - \underbrace{12.80}_{\text{WIDTH}\times r_o}\underbrace{\int_{8.38}^{15.38} dr}_{(-89.60)}\right]}$$

$$\int r\,dr = r^2/2$$

$$15\int_{6.88}^{8.38} r\,dr = 15\left[\frac{(8.38)^2}{2} - \frac{(6.88)^2}{2}\right] = 171.68$$

$$127.95\int_{6.88}^{8.38} dr = 127.95\left[(8.38 - 6.88)\right] = 191.93$$

$$1.5\int_{8.38}^{15.38} r\,dr = 1.5\left[\frac{(15.38)^2}{2} - \frac{(8.38)^2}{2}\right] = 124.74$$

$$12.80\int_{8.38}^{15.38} dr = 12.80\left[(15.38 - 8.38)\right] = 89.60$$

$$S = \frac{M \times Y}{R \times 14.89}$$ (FOR THE EXAMPLE SHOWN)

(R IS THE RADIUS TO THE POINT UNDER CONSIDERATION)

(Y IS THE DISTANCE FROM THE NEUTRAL AXIS)

MITER GATES
HORIZONTALLY AND
VERTICALLY FRAMED
DESIGN DATA
ANCHORAGE LINKS
GUDGEON PIN BARREL

ANCHORAGE LINKS

DIMENSIONS SHOWN ARE TYPICAL AND ARE USED FOR EXPLANATION.
DIMENSIONS MAY VARY WHERE NECESSARY.

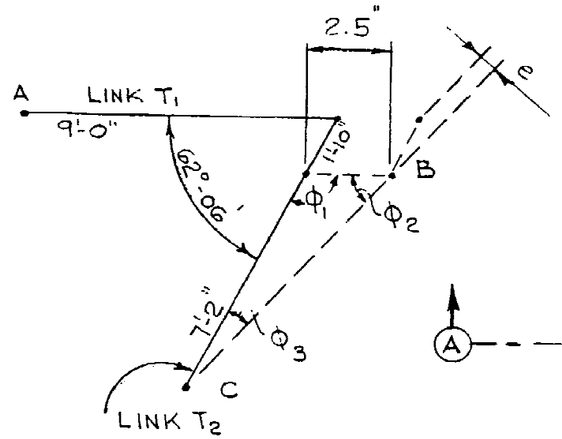

$\Phi_1 = 180° - (62°-06') = 117°-54'$

$\overline{BC}^2 = 86^2 + 2.5^2 - 2(86 \times 2.5)\cos(117°-54')$

$BC = 87.20"$

$\frac{86.00}{87.20} = \frac{\sin \Phi_2}{\sin 117°-54'}$, $\Phi_2 = 60°-39'$

$\Phi_3 = 180° - [(60°-39') + (117°-54')] = 1°-27'$

ECCENTRICITY $(e) = 22" \times \tan(1°-27') = 0.557"$

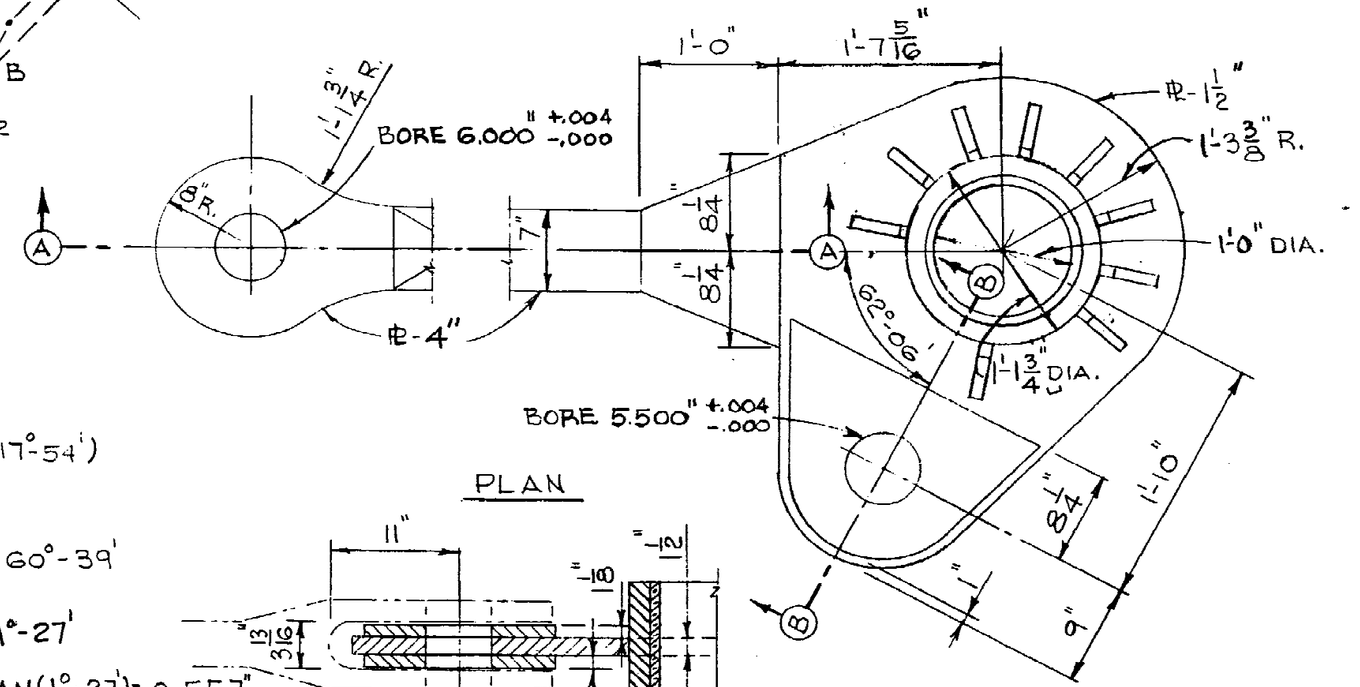

PLAN

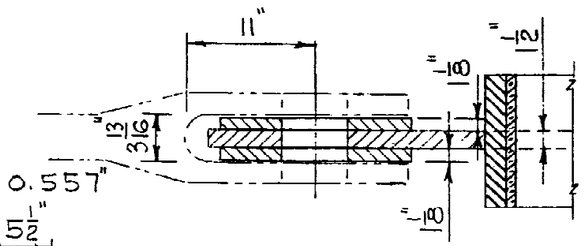

SECTION B-B

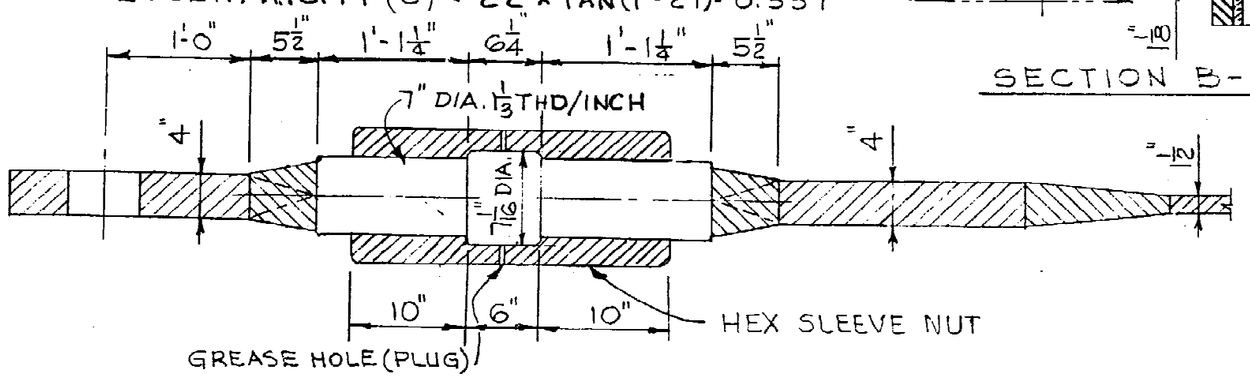

SECTION A-A

THE RECTANGULAR BAR SECTION MAY BE MADE A MINIMUM OF 6"×4" WITH THE RELATED RADII AND THREADED DIAMETERS CHANGED ACCORDINGLY.

MITER GATES
HORIZONTALLY AND
VERTICALLY FRAMED
ANCHORAGE LINKS
DESIGN DATA

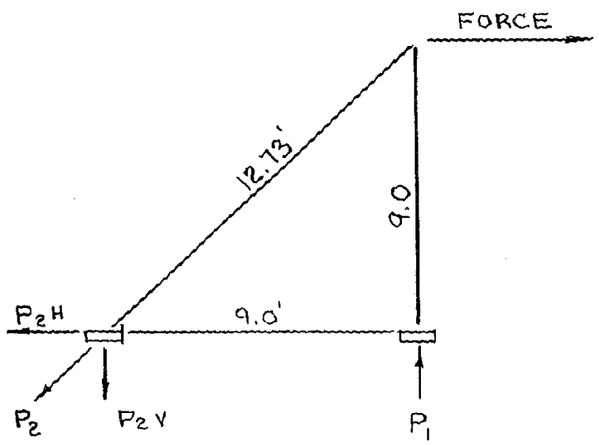

P_2 = FORCE ÷ 0.707

$P_1 = P_2H = P_2V$ = FORCE

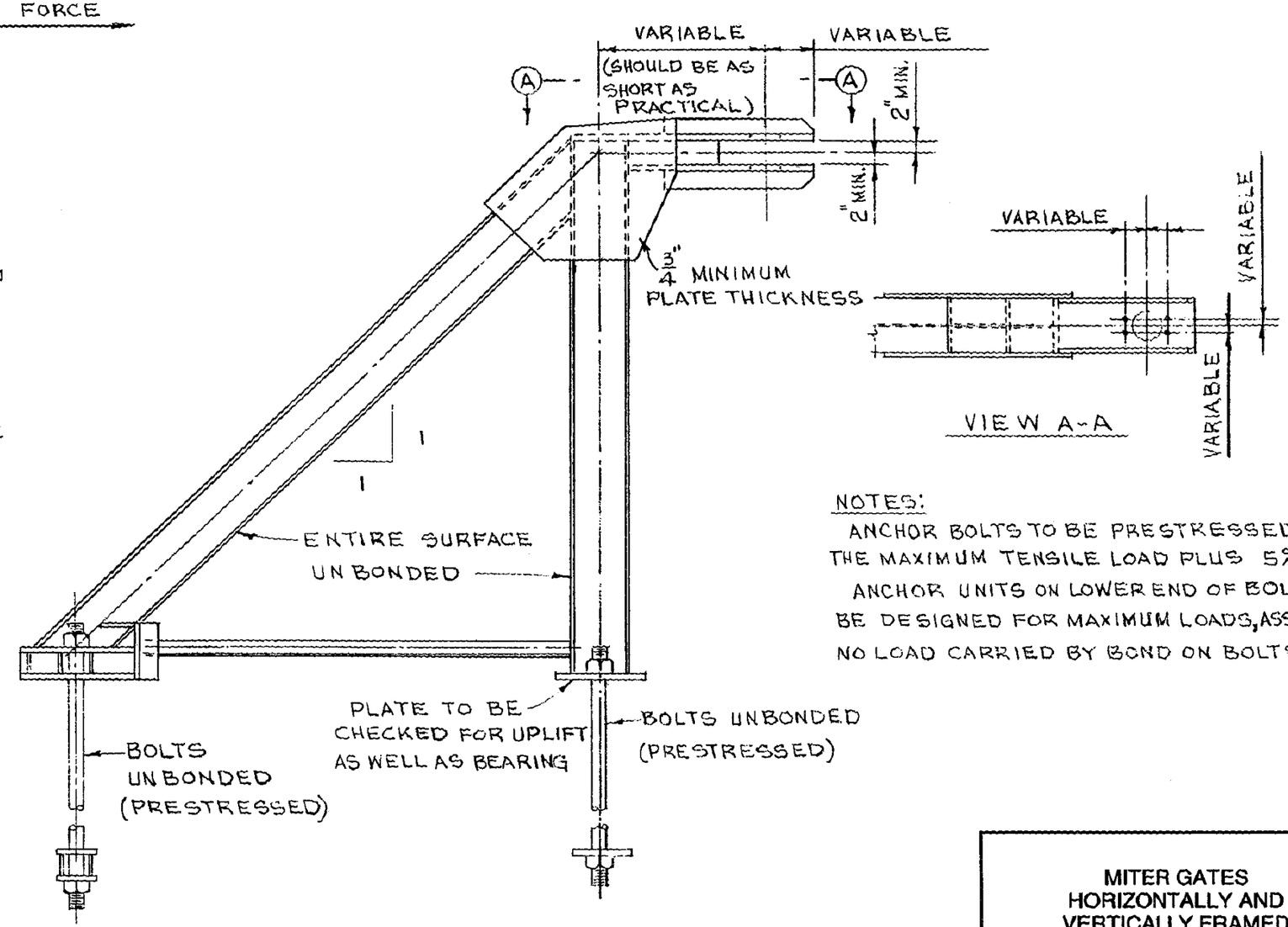

NOTES:

ANCHOR BOLTS TO BE PRESTRESSED TO THE MAXIMUM TENSILE LOAD PLUS 5%.

ANCHOR UNITS ON LOWER END OF BOLTS TO BE DESIGNED FOR MAXIMUM LOADS, ASSUMING NO LOAD CARRIED BY BOND ON BOLTS.

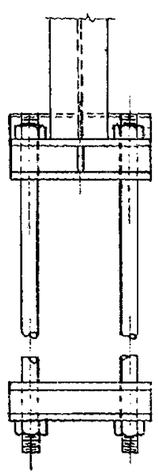

END VIEW

ELEVATION

MITER GATES
HORIZONTALLY AND
VERTICALLY FRAMED
EMBEDDED ANCHORAGE

AREA OF $\frac{1}{2}$ CIRCLE = $\frac{\pi D^2}{8}$

$I = 0.109757\ R^4$

$m = 0.424413\ R$

AREA OF $\frac{1}{2}$ ELLIPSE = $\frac{\pi a b}{2}$

$I = b a^3 (\pi/8 - 8/9\pi)$

$n = 4a/3\pi$

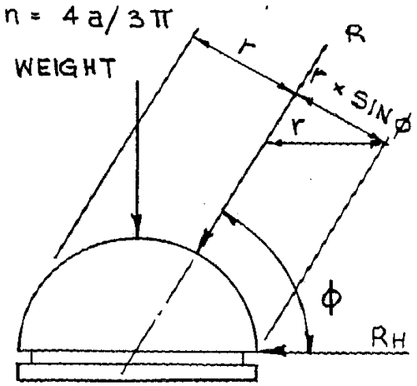

PINTLE

RH IS THE RESULTANT OF Ra AND Rb SEE PLATE B-8

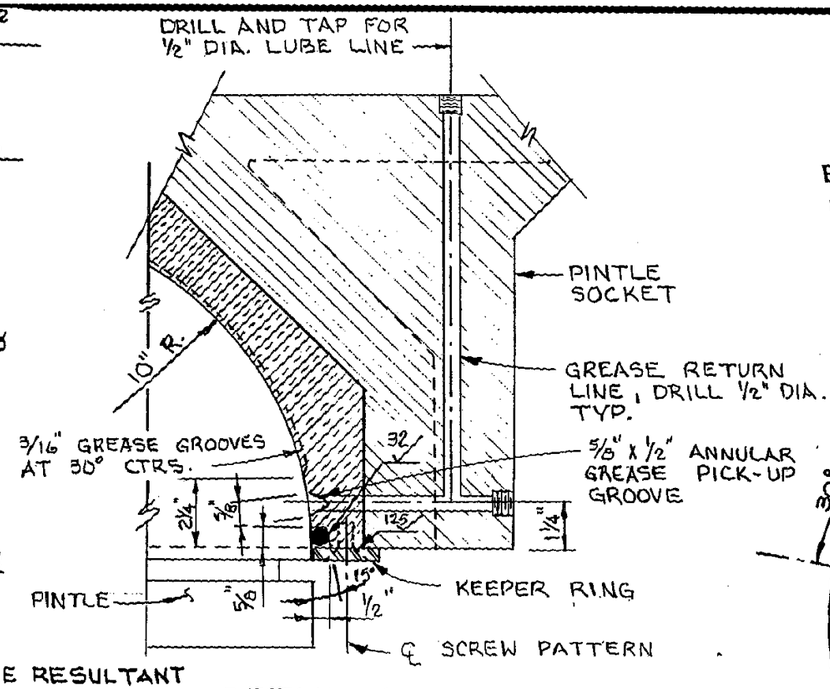

DETAIL A

PINTLE BASE

(LOWER MITER GATE)

DIMENSIONS SHOWN ARE TYPICAL AND USED FOR EXPLANATION ONLY. DIMENSIONS MAY VARY WHERE NECESSARY.

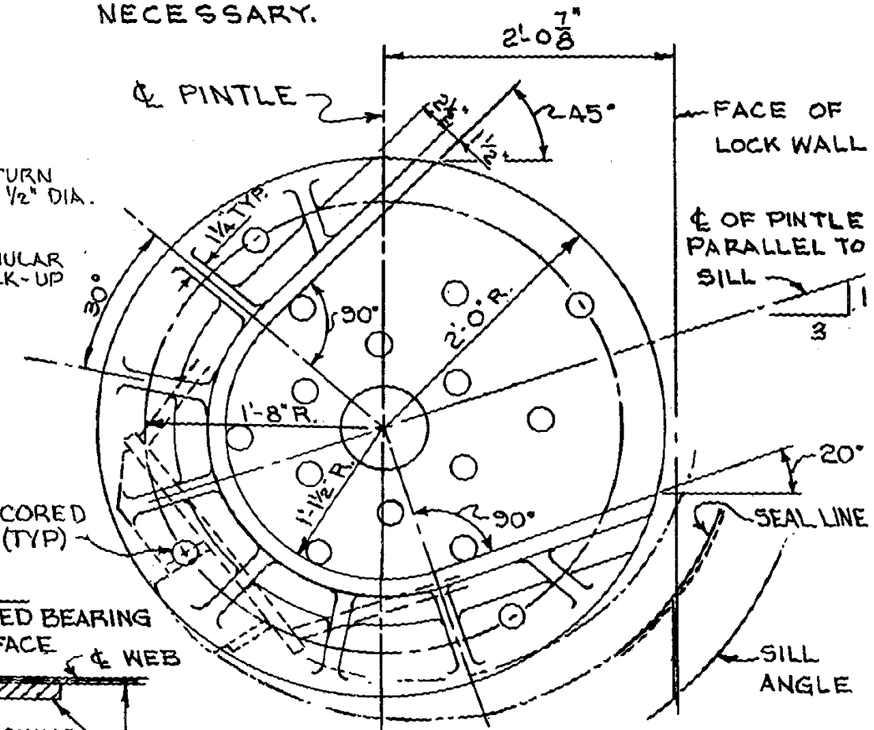

PLAN

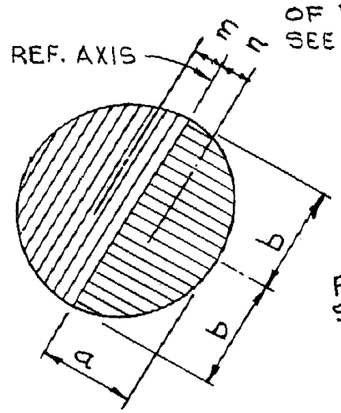

PROJECTED AREA

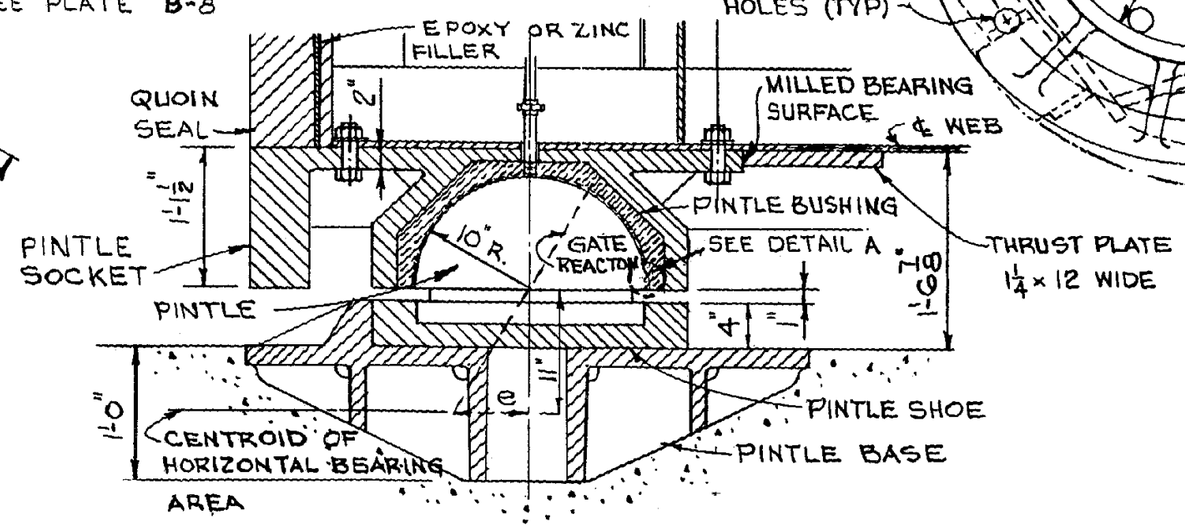

SECTION THRU PINTLE ASSEMBLY

BEARING ON BUSHING

MAXIMUM = $\frac{R}{A} + \frac{Mc}{I}$

MINIMUM = $\frac{R}{A} - \frac{Mc}{I}$

MITER GATES
HORIZONTALLY FRAMED
LOWER GATE
FLOATING PINTLE
ASSEMBLY

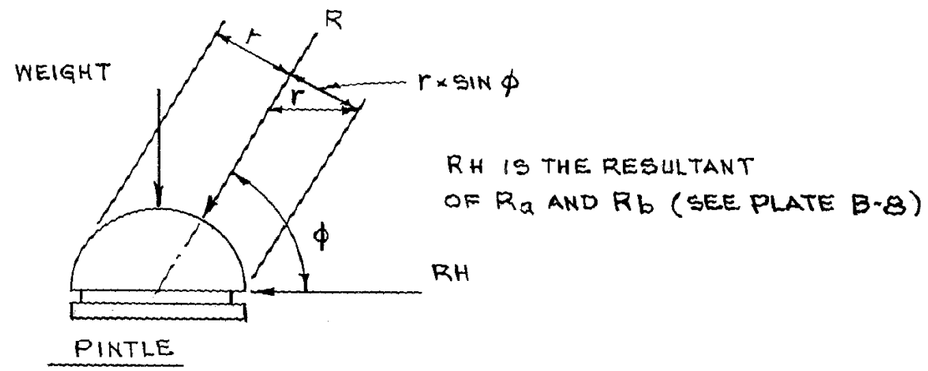

RH IS THE RESULTANT OF R_a AND R_b (SEE PLATE B-8)

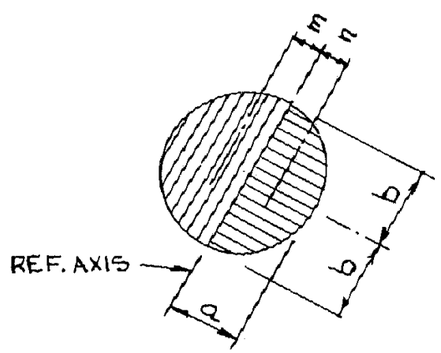

AREA OF $\frac{1}{2}$ CIRCLE = $\frac{\pi D^2}{8}$

$I = 0.109757\ R^4$

$m = 0.424413\ R$

AREA OF $\frac{1}{2}$ ELLIPSE = $\frac{\pi a b}{2}$

$I = ba^3(\pi/8 - 8/9\pi)$

$n = 4a/3\pi$

BEARING ON BUSHING = $\frac{R}{A} \pm \frac{Mc}{I}$

PROJECTED AREA

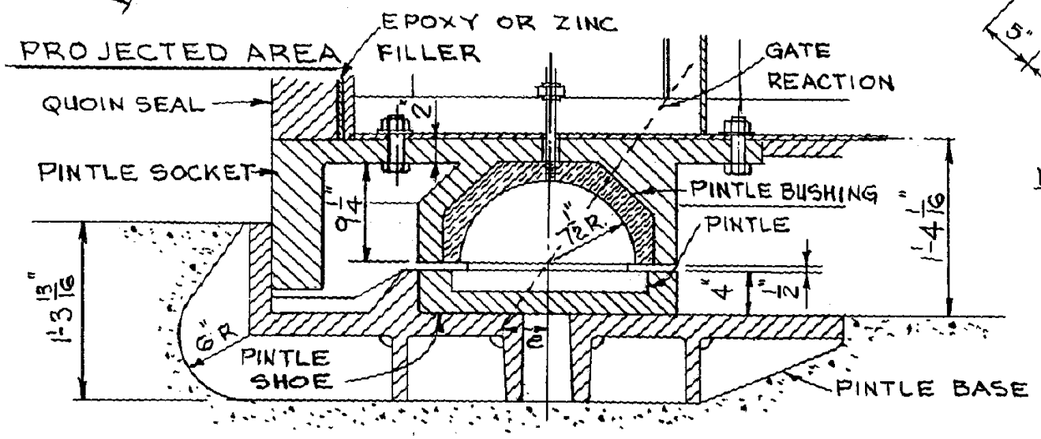

SECTION THRU PINTLE ASSEMBLY

PINTLE BASE
(UPPER MITER GATE)

DIMENSIONS SHOWN ARE TYPICAL AND USED FOR EXPLANATION ONLY. DIMENSIONS MAY VARY WHERE NECESSARY

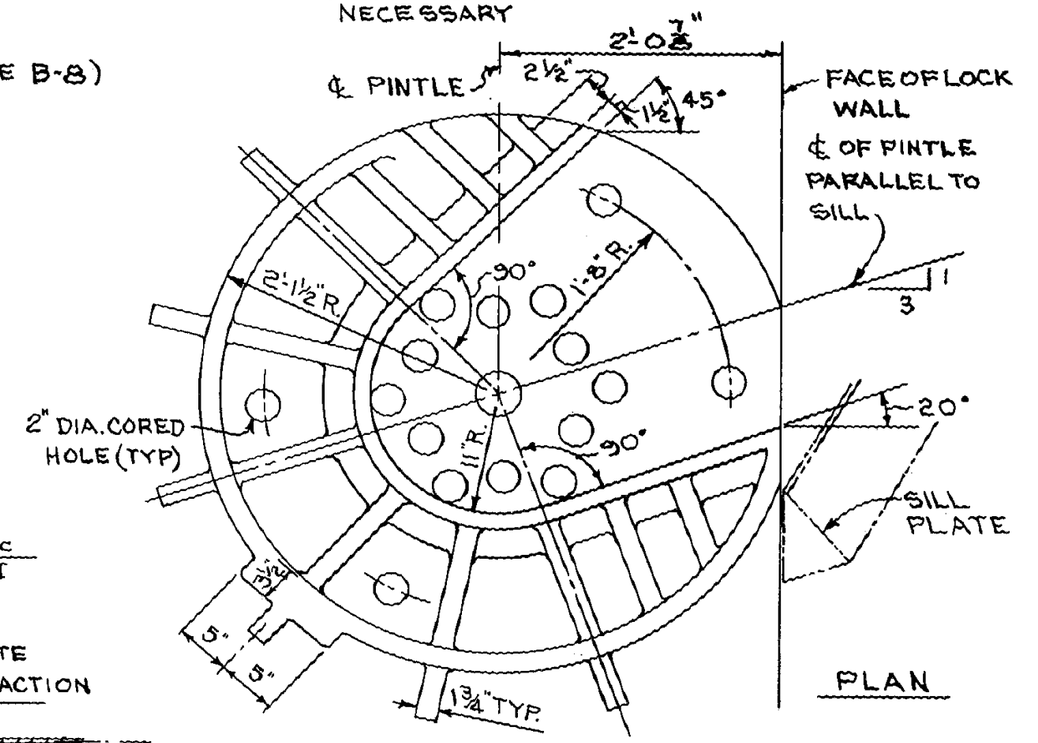

PLAN

NOTE:

PINTLE BASE FOR VERTICALLY FRAMED GATES SIMILAR TO THE PINTLE BASE SHOWN. SEE PLATE B-32 FOR PLAN OF PINTLE BASE FOR VERTICALLY FRAMED GATE.

MITER GATES
HORIZONTALLY FRAMED
UPPER GATE
FLOATING PINTLE
ASSEMBLY

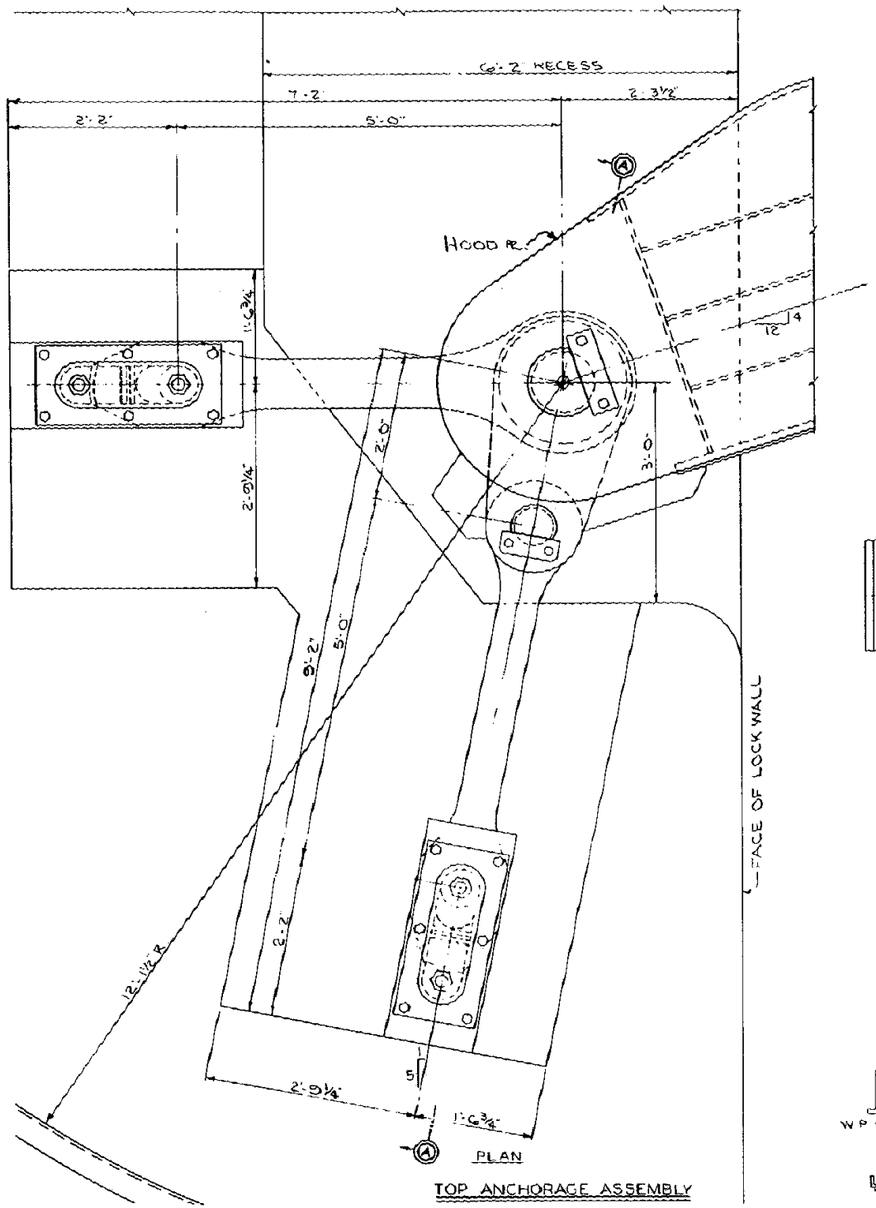

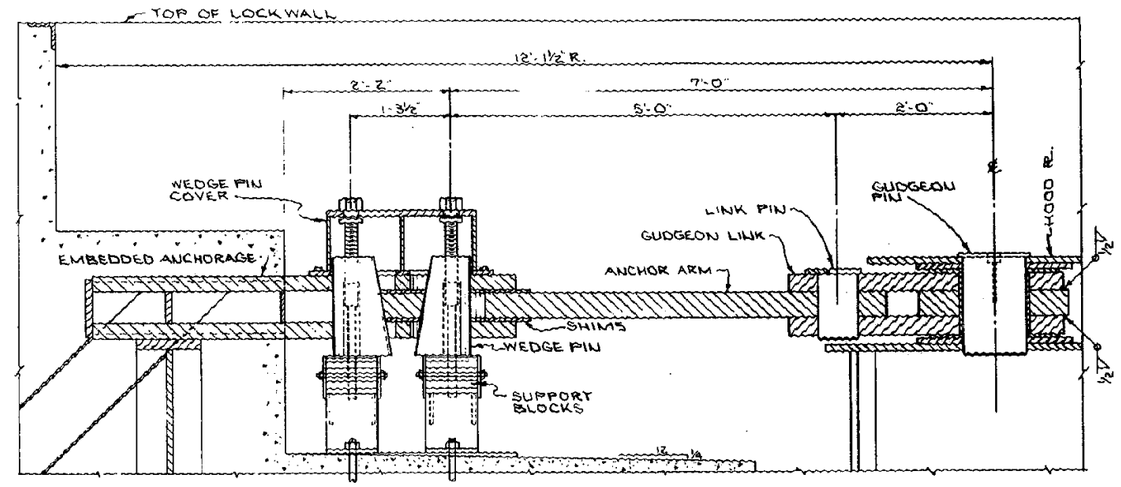

SECTION A-A

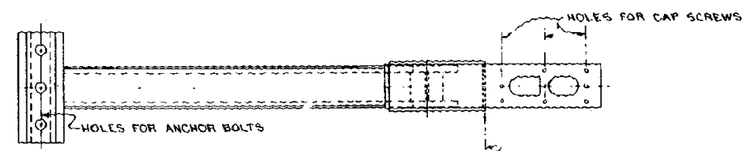

PLAN

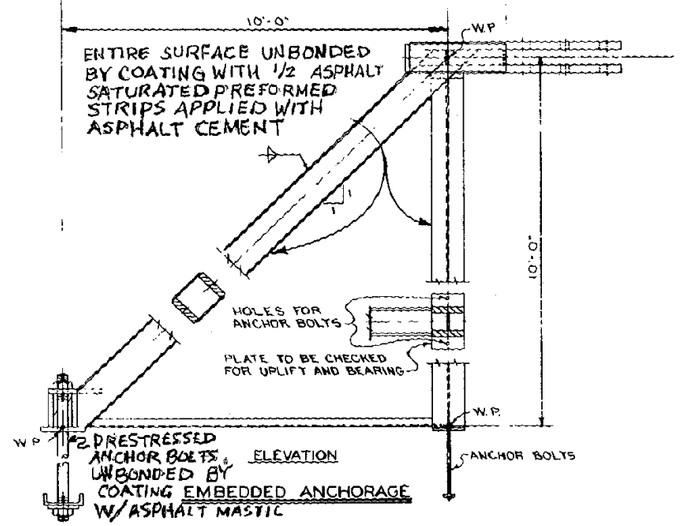

ELEVATION

NOTES

1. DIMENSIONS AND DETAILS SHOWN ARE TYPICAL. AND VARY AS REQUIRED BY GATE SIZE.
2. ANCHOR BOLTS TO BE PRESTRESSED TO THE MAXIMUM TENSILE LOAD PLUS 5 %.
3. ANCHOR UNITS ON LOWER END OF BOLTS TO BE DESIGNED FOR MAXIMUM LOADS, ASSUMING NO LOAD CARRIED BY BOND ON BOLTS.

MITER GATES
HORIZONTALLY FRAMED
TOP ANCHORAGE
ASSEMBLY

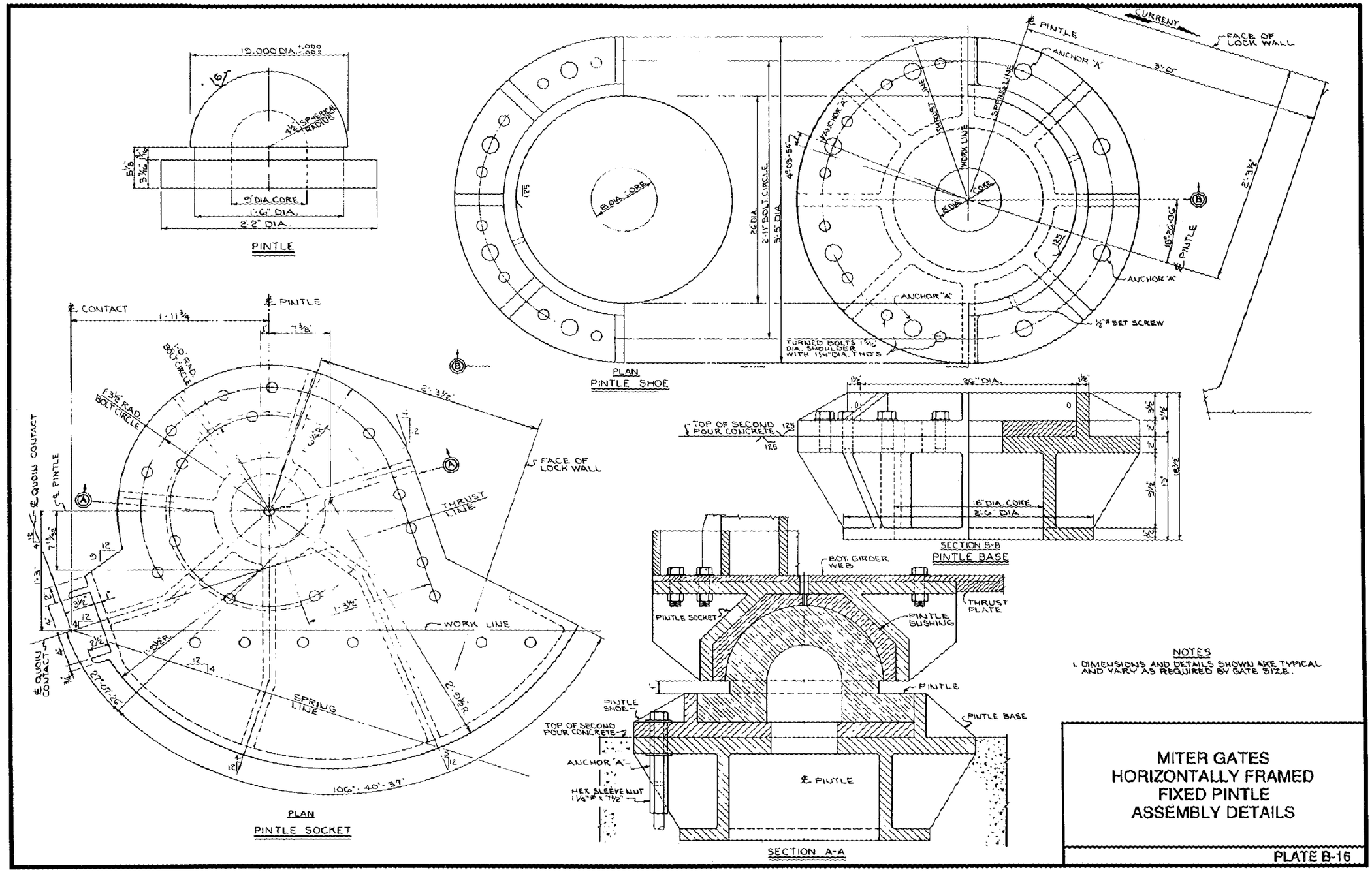

NOTES

1. DIMENSIONS AND DETAILS SHOWN ARE TYPICAL AND VARY AS REQUIRED BY GATE SIZE.

MITER GATES
HORIZONTALLY FRAMED
FIXED PINTLE
ASSEMBLY DETAILS

DIMENSIONS AND SIZES SHOWN ARE TYPICAL AND USED ONLY FOR EXPLANATION, BOTH MAY VARY WHERE NECESSARY.

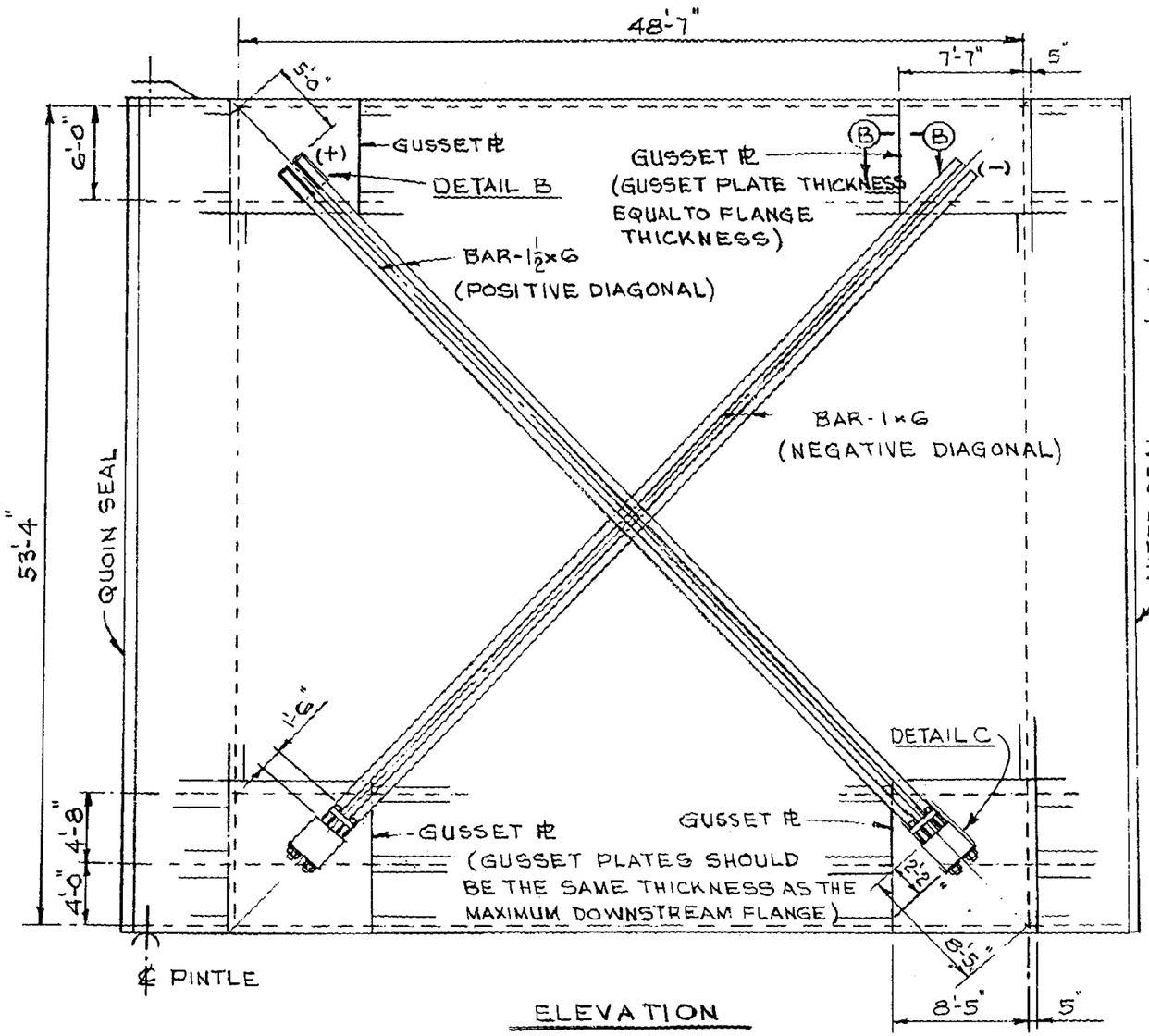

ELEVATION

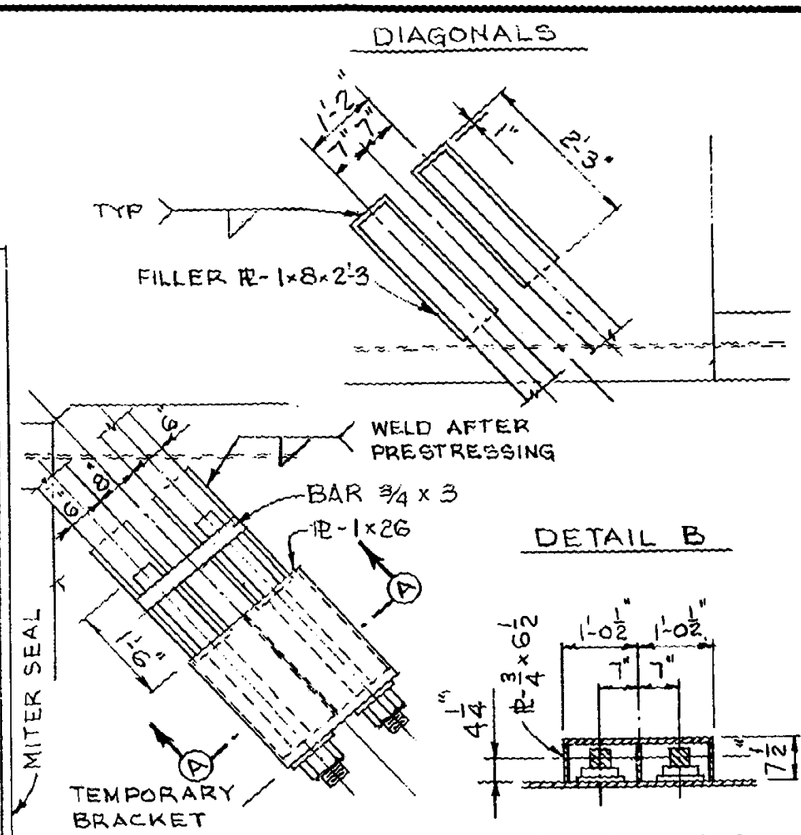

DETAIL C

SECTION A-A

NOTE:

BRACKET AND THREADED BAR MAY BE REMOVED AFTER PRESTRESSING AND ALL ADJUSTMENTS HAVE BEEN COMPLETED, OR LEFT IN PLACE FOR FUTURE USE.

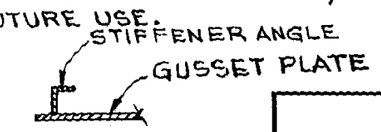

SECTION B-B

MITER GATES HORIZONTALLY AND VERTICALLY FRAMED DIAGONALS

PLATE B-17 (SHEET 1 OF 2)

DIMENSIONS AND SIZES SHOWN ARE TYPICAL AND USED ONLY FOR EXPLANATION, BOTH MAY VARY WHERE NECESSARY.

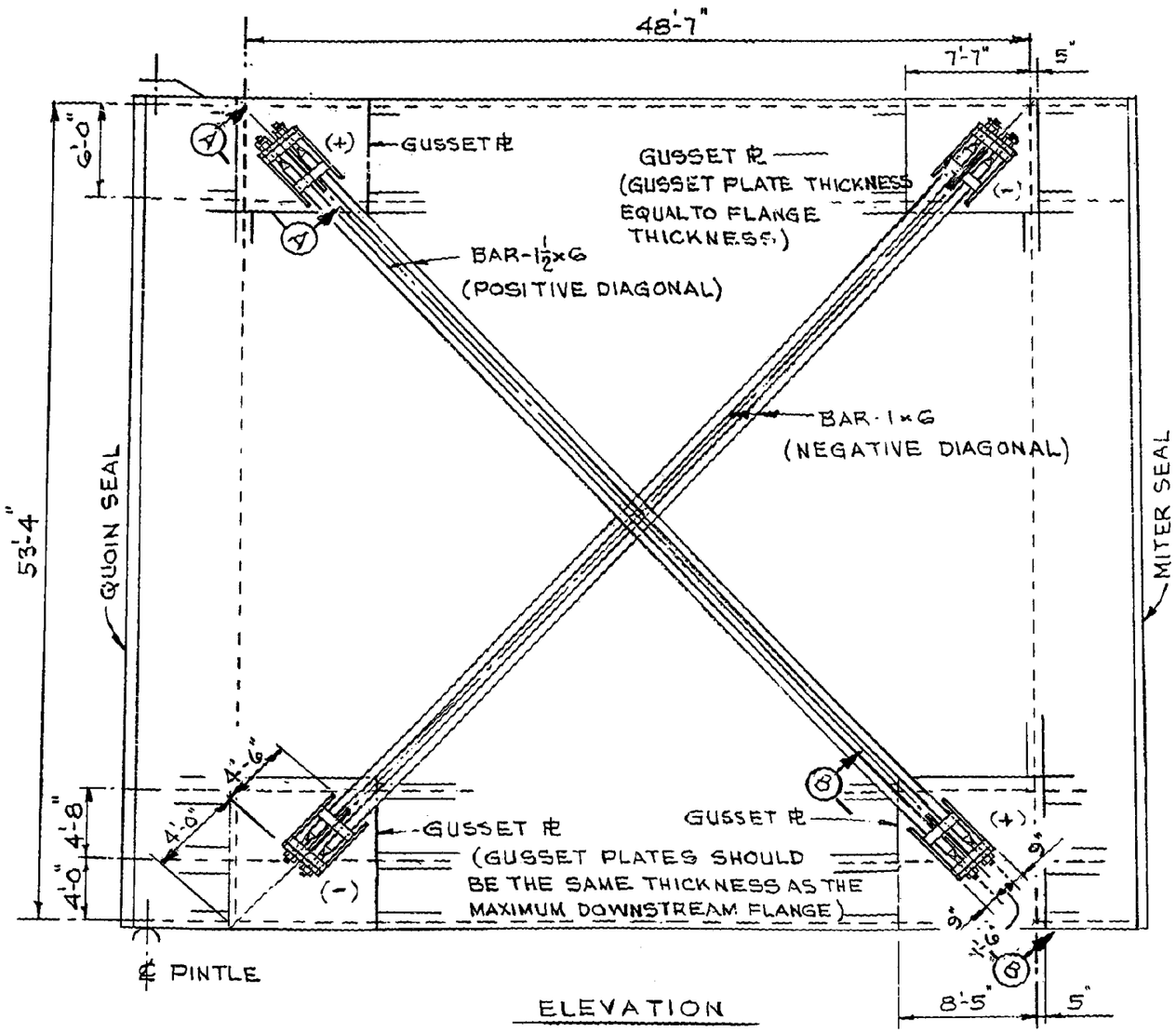

ELEVATION

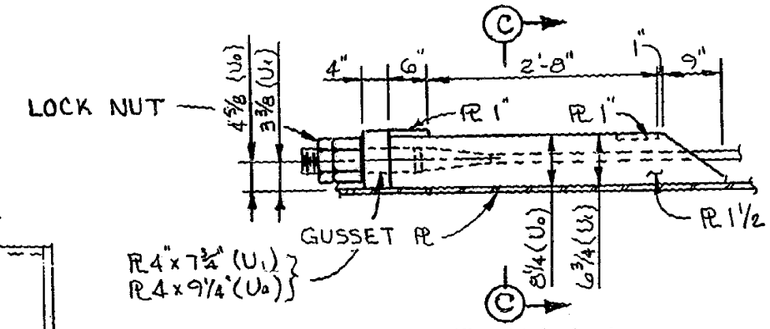

SECTION A-A

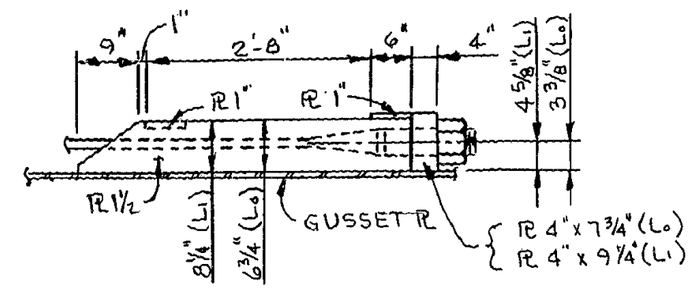

SECTION B-B

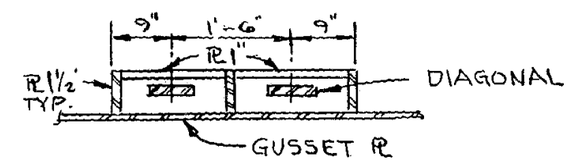

SECTION C-C

MITER GATES HORIZONTALLY AND VERTICALLY FRAMED DIAGONALS

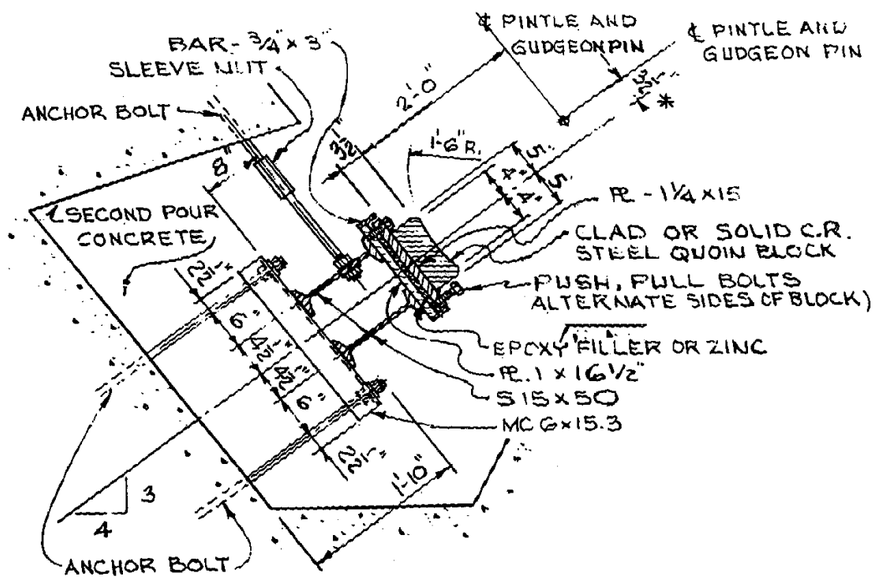

PLAN 1

DIMENSIONS AND SIZES SHOWN ARE TYPICAL AND USED ONLY FOR EXPLANATION, BOTH MAY VARY WHERE NECESSARY.

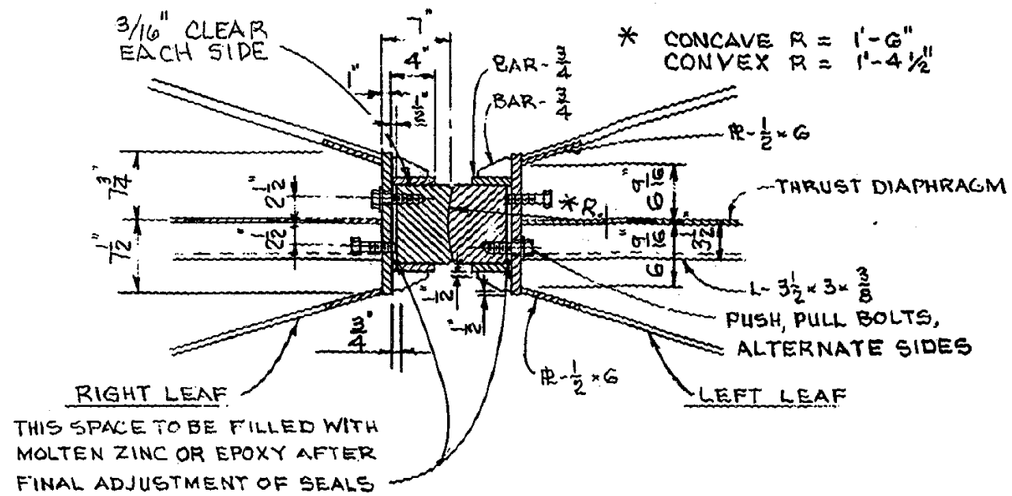

PLAN OF GATES IN MITERED POSITION

(SHOWING CONVEX AND CONCAVE BLOCK)
MITERING GUIDE NOT SHOWN)

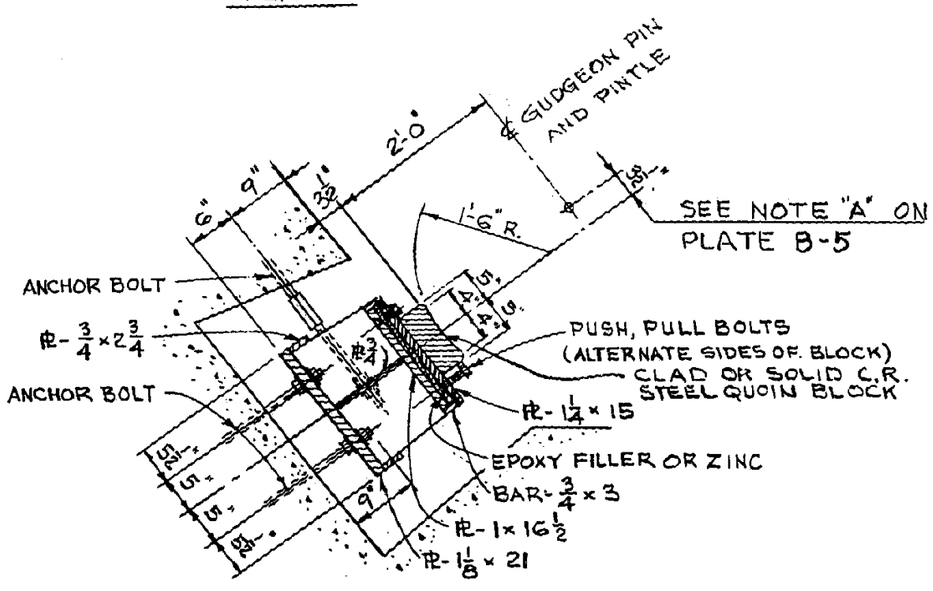

PLAN 2

SECTIONS THRU WALL QUOIN

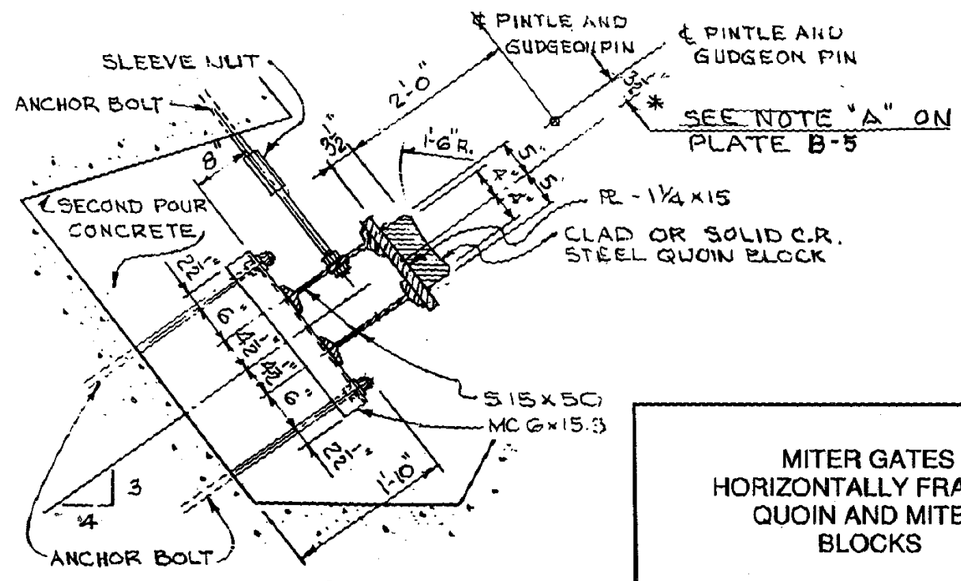

PLAN 3

MITER GATES
HORIZONTALLY FRAMED
QUOIN AND MITER
BLOCKS

WALKWAY AND MITER GUIDE

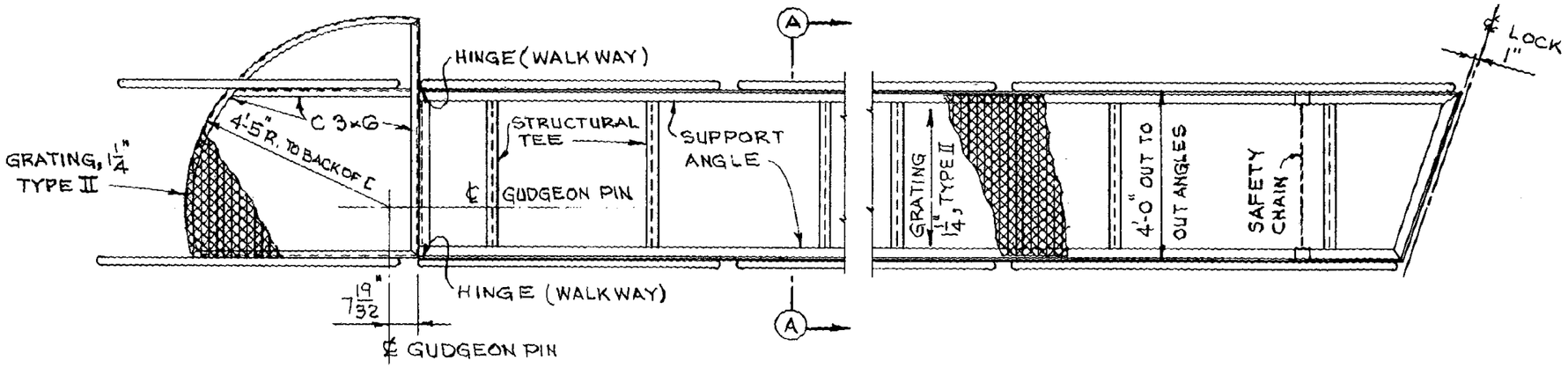

PLAN OF WALKWAY

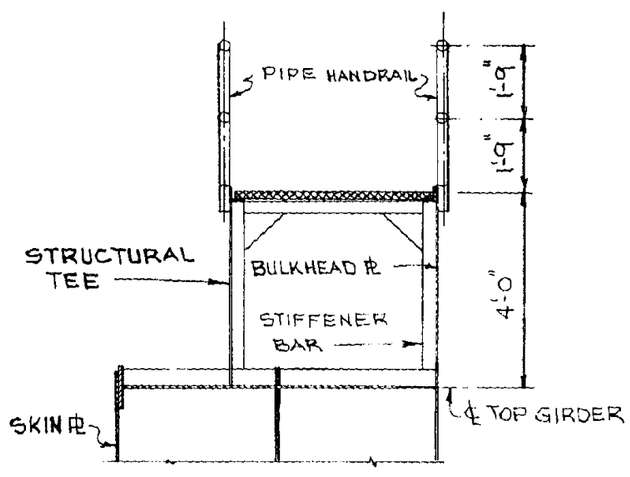

SECTION A-A

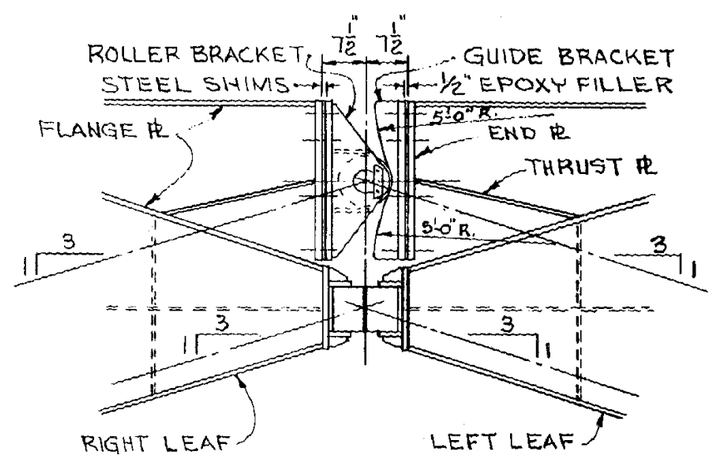

MITER GUIDE ASSEMBLY

DIMENSIONS AND SIZES ARE TYPICAL AND USED ONLY FOR EXPLANATION, BOTH MAY VARY WHERE NECESSARY.

MITER GATES HORIZONTALLY AND VERTICALLY FRAMED WALKWAY AND MITER GUIDE

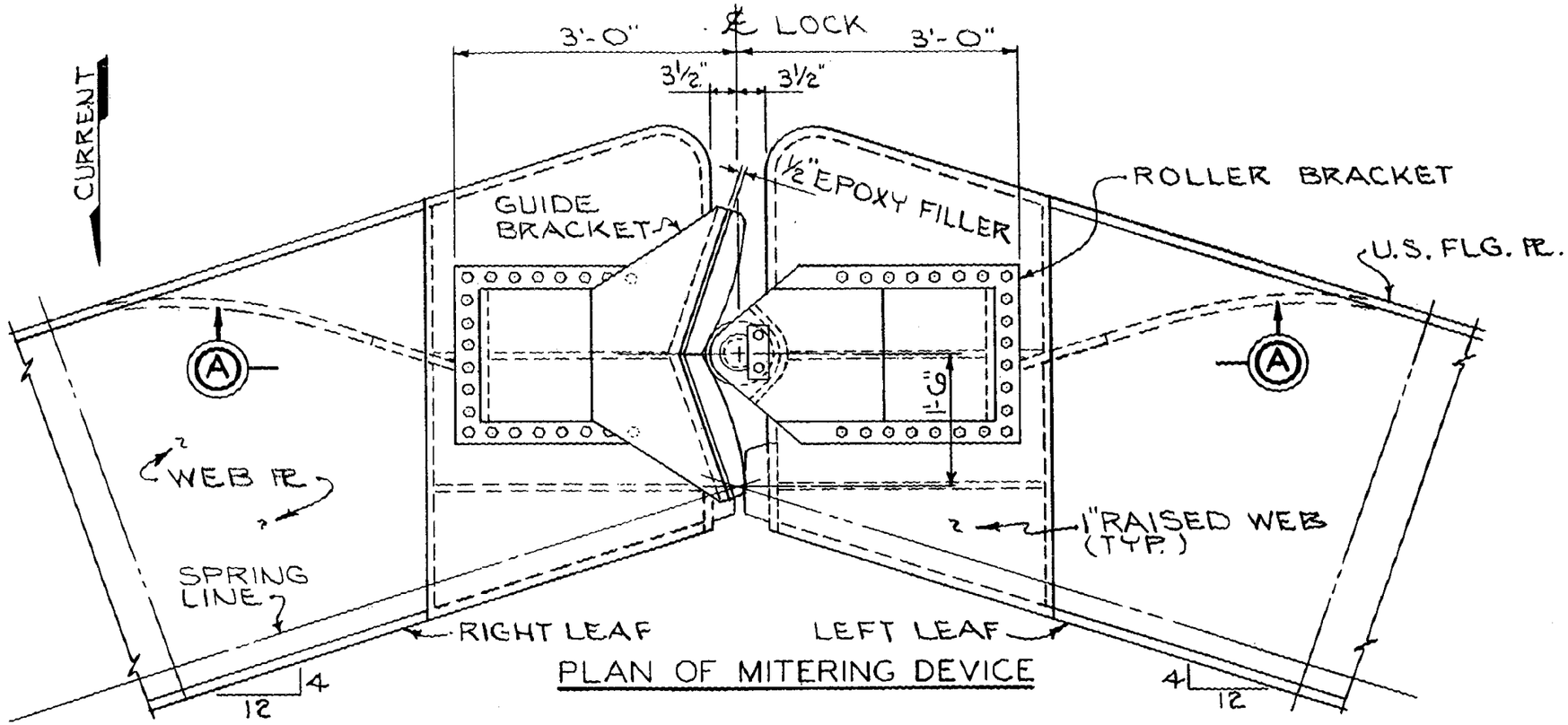

PLAN OF MITERING DEVICE

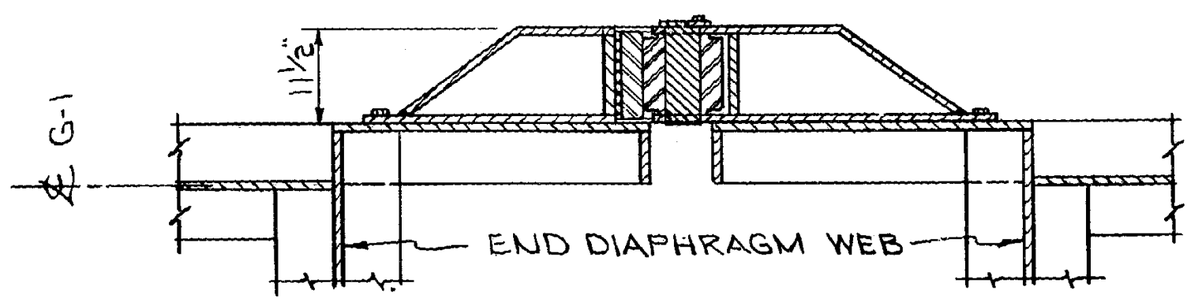

SECTION A-A

MITER GATES
HORIZONTALLY FRAMED
MITER GUIDE

PLATE B-20

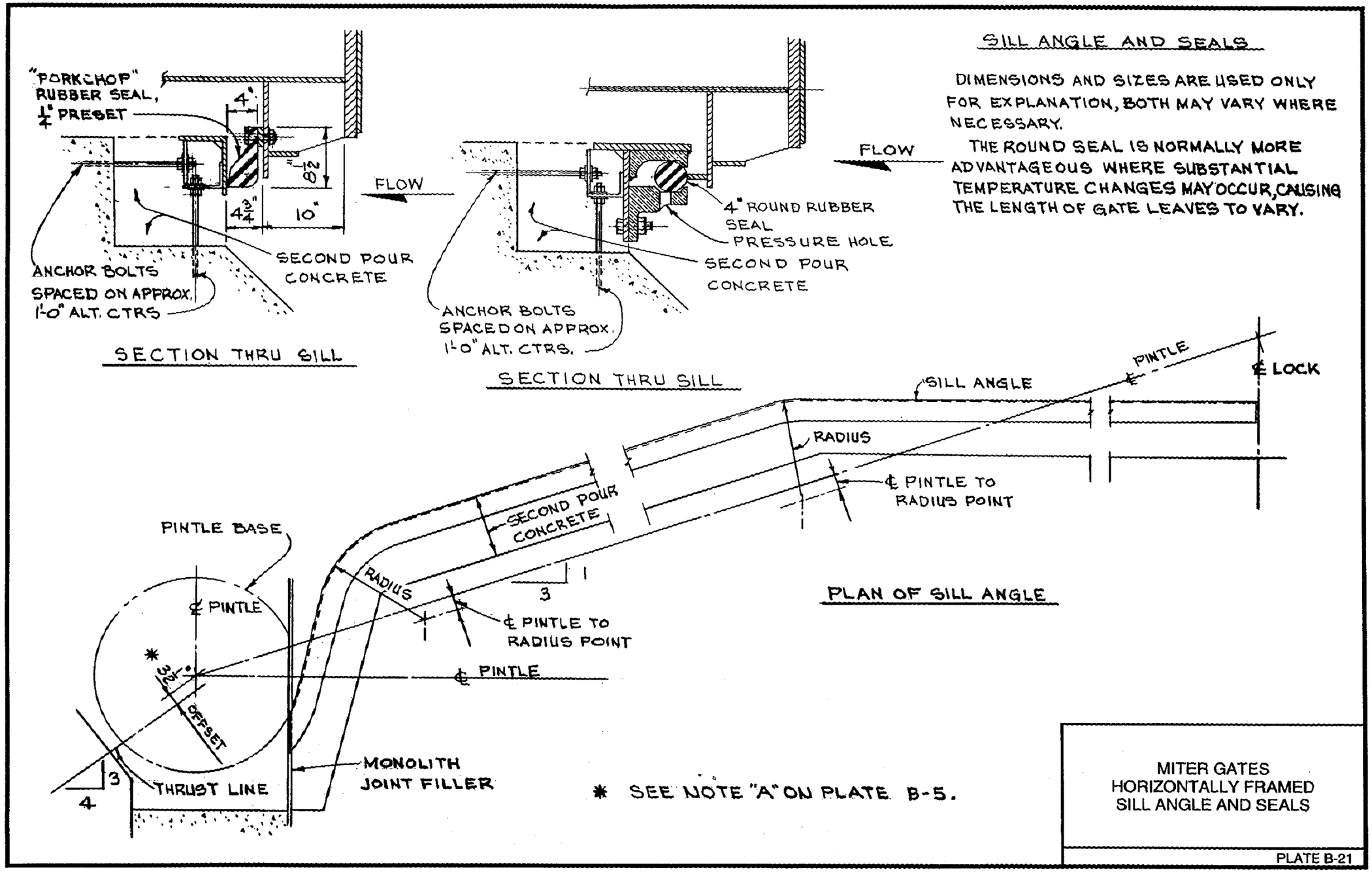

MITER GATES
HORIZONTALLY FRAMED
SILL ANGLE AND SEALS

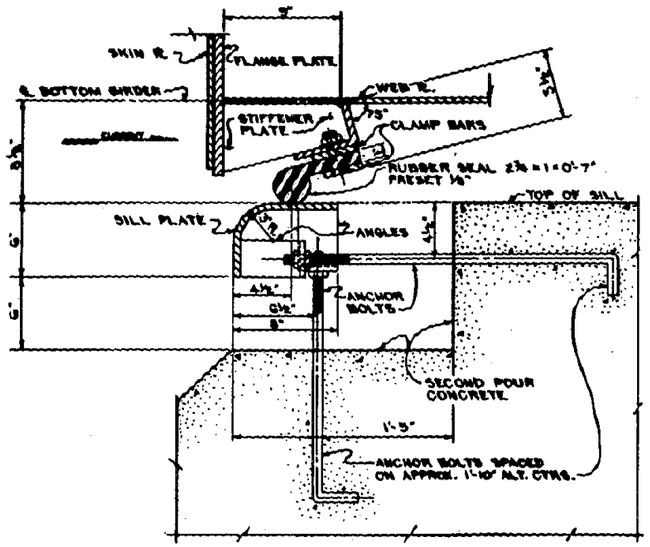

SECTION A-A

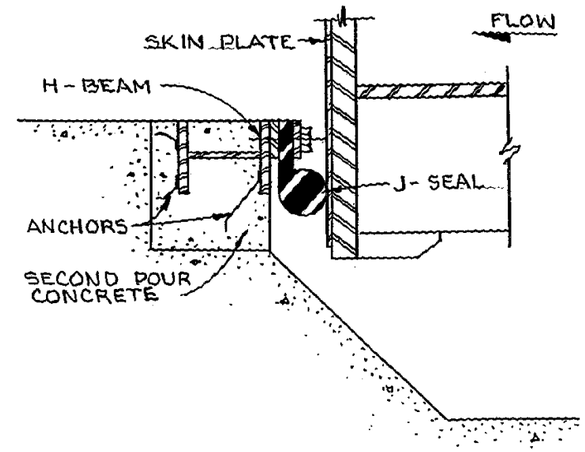

SECTION THRU SILL

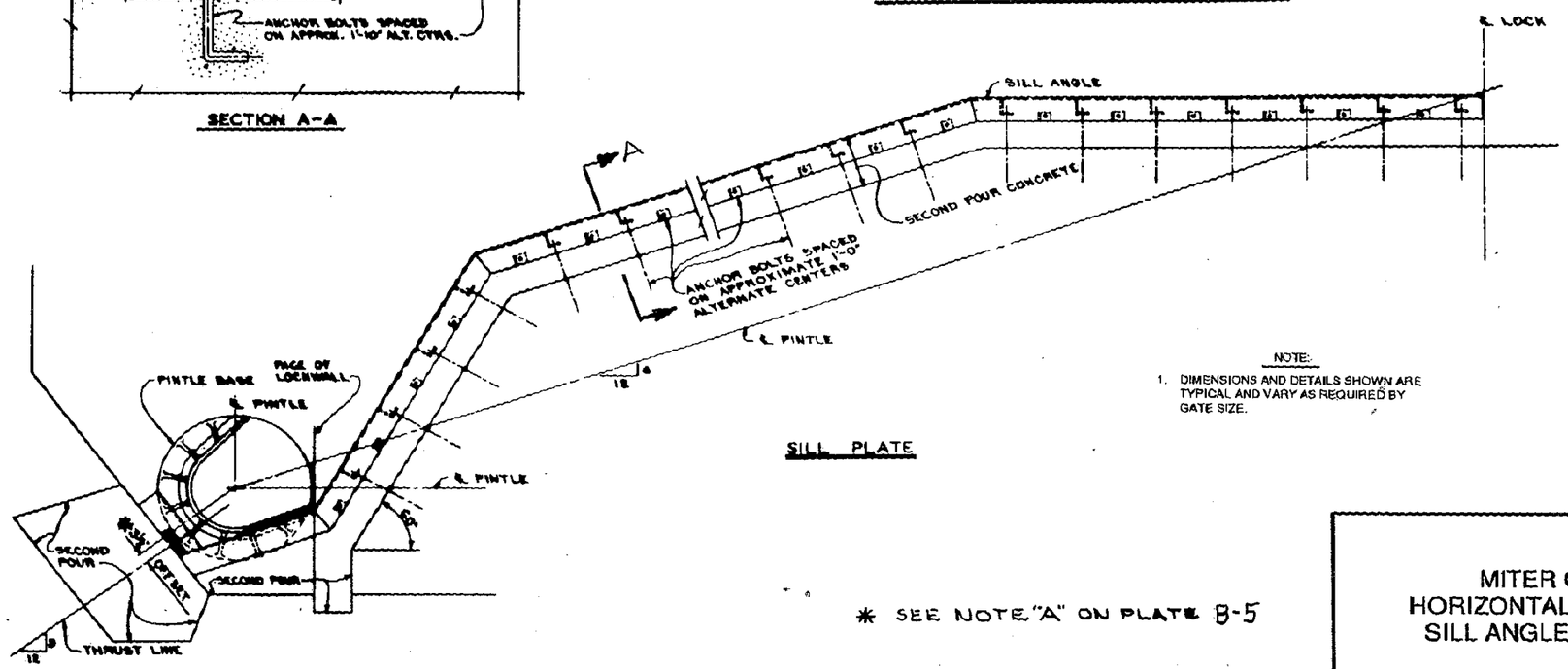

SILL PLATE

NOTE:

1. DIMENSIONS AND DETAILS SHOWN ARE TYPICAL AND VARY AS REQUIRED BY GATE SIZE.

* SEE NOTE "A" ON PLATE B-5

MITER GATES
HORIZONTALLY FRAMED
SILL ANGLE AND SEAL

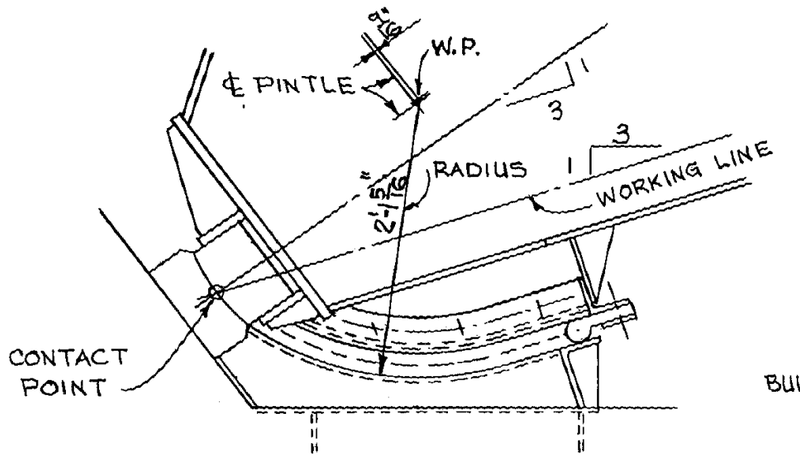

PLAN

QUOIN AND MITER WATER SEALS

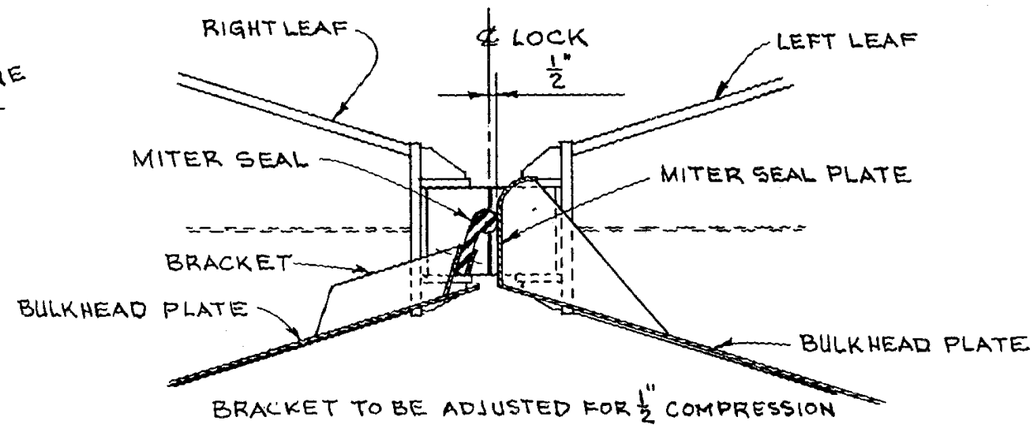

BRACKET TO BE ADJUSTED FOR ½" COMPRESSION IN MITERSEAL BEFORE WELDING TO BULKHEAD PLATE

PLAN

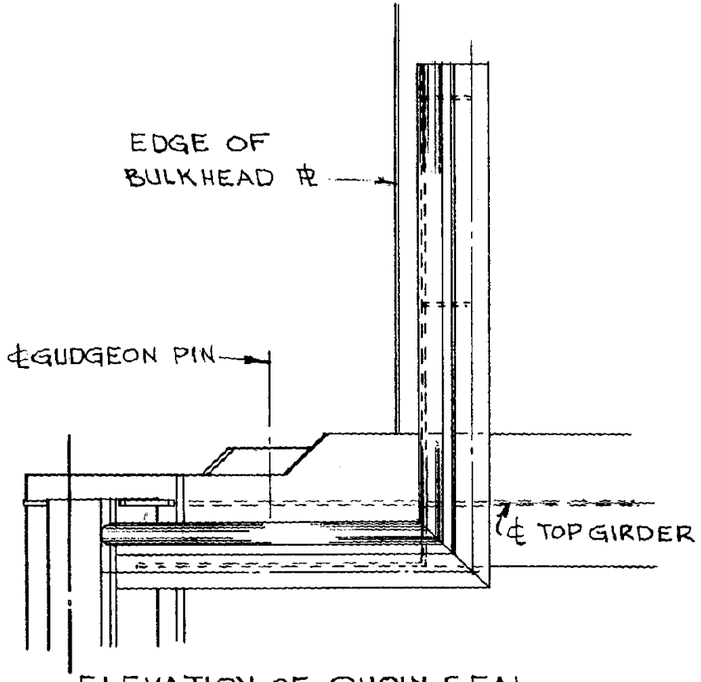

ELEVATION OF QUOIN SEAL

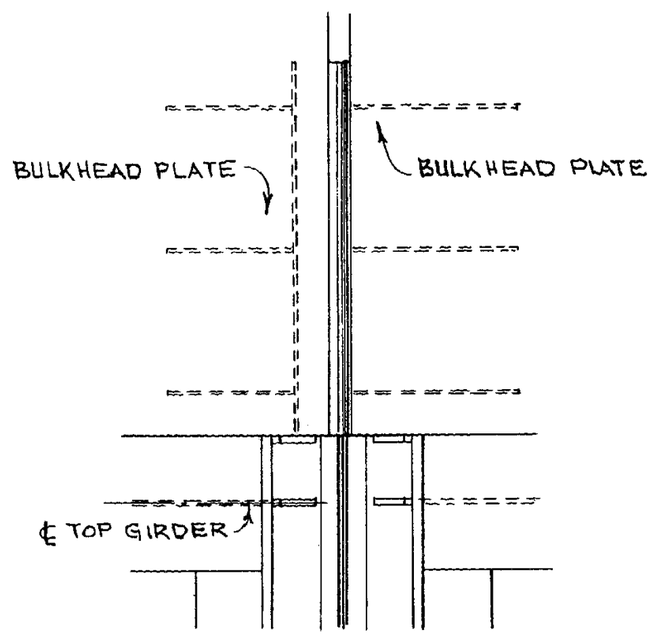

ELEVATION OF MITER SEAL

MITER GATES
HORIZONTALLY FRAMED
QUOIN AND MITER
WATER SEALS

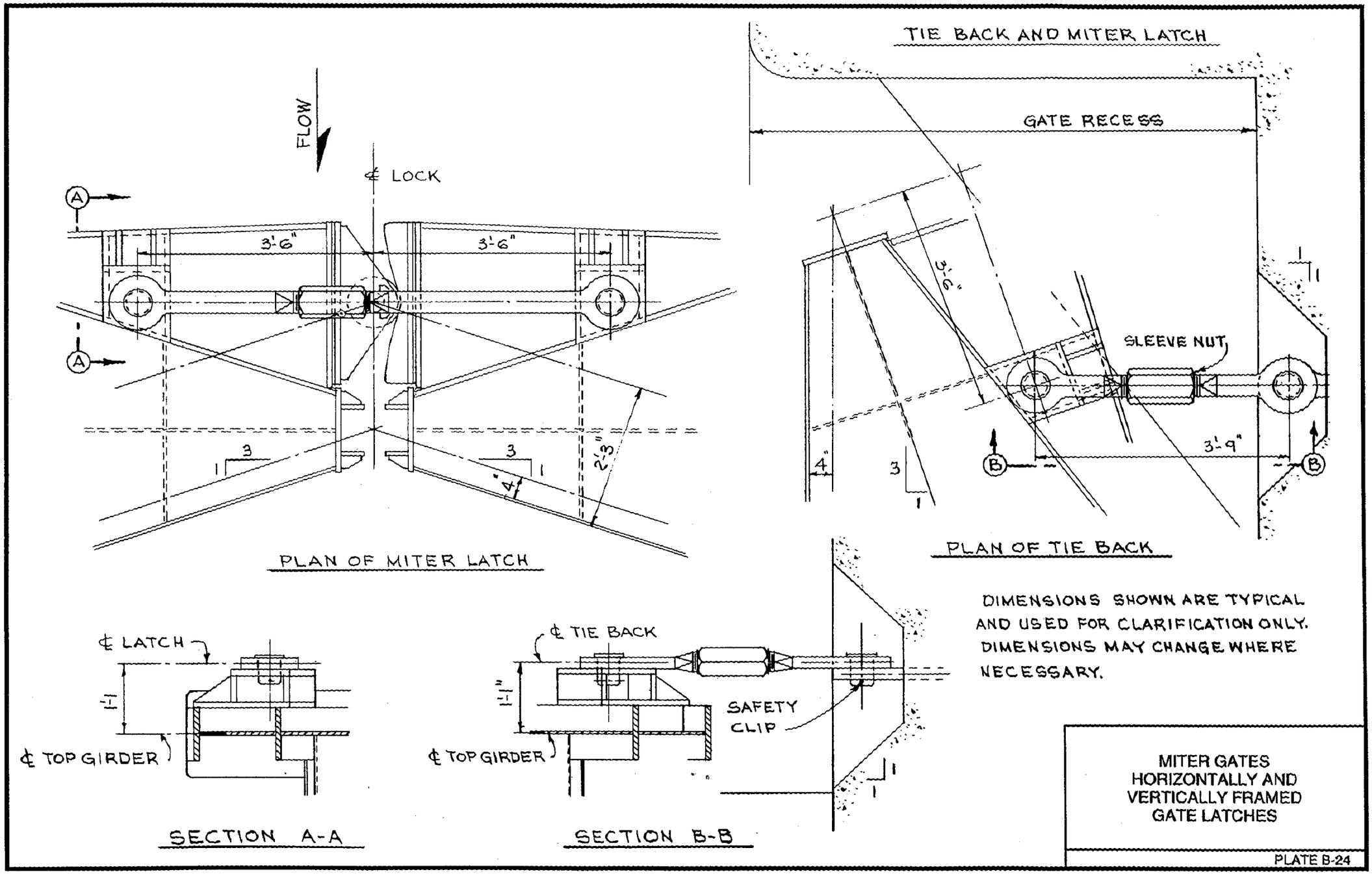
FLOW
℄ LOCK
A
A
3'-6"
3'-6"
3
1
3
1
4"
2'-3"
PLAN OF MITER LATCH
TIE BACK AND MITER LATCH
GATE RECESS
3'-6"
SLEEVE NUT
4"
3
1
3'-9"
B
B
PLAN OF TIE BACK
DIMENSIONS SHOWN ARE TYPICAL AND USED FOR CLARIFICATION ONLY. DIMENSIONS MAY CHANGE WHERE NECESSARY.
℄ LATCH
1'-1"
℄ TOP GIRDER
SECTION A-A
℄ TIE BACK
1'-1"
℄ TOP GIRDER
SAFETY CLIP
1
1
SECTION B-B
MITER GATES HORIZONTALLY AND VERTICALLY FRAMED GATE LATCHES
PLATE B-24

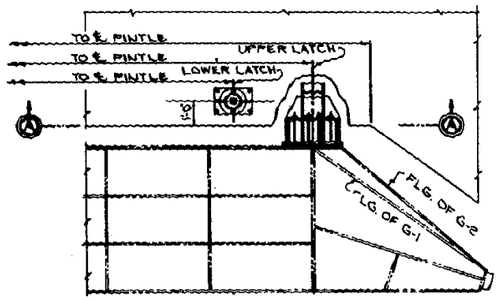

PLAN

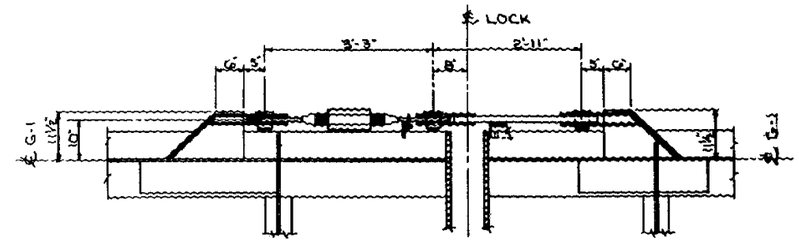

SECTION D-D

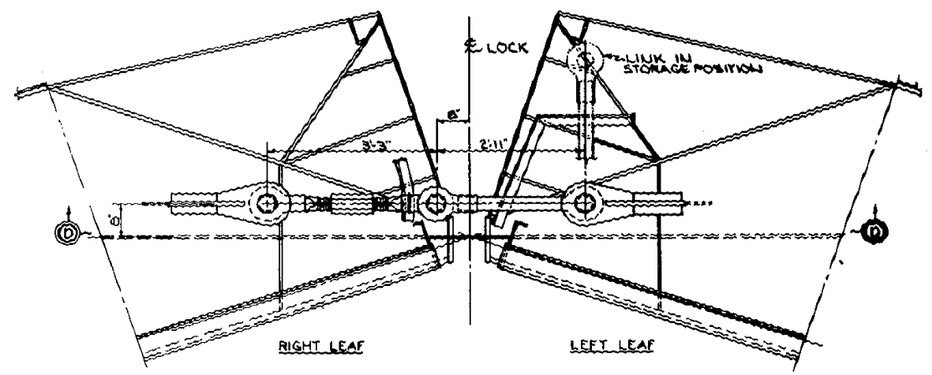

ASSEMBLY - TOP GATE LATCH

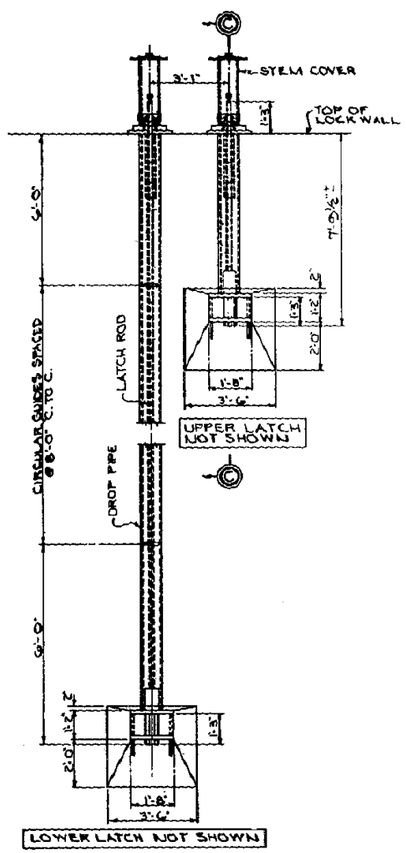

SECTION A-A

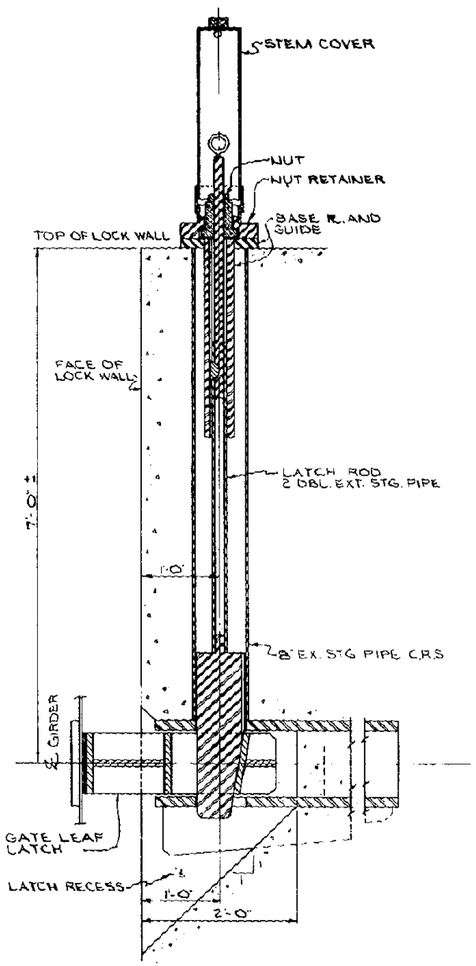

SECTION C-C

UPPER AND LOWER LATCH ASSEMBLY

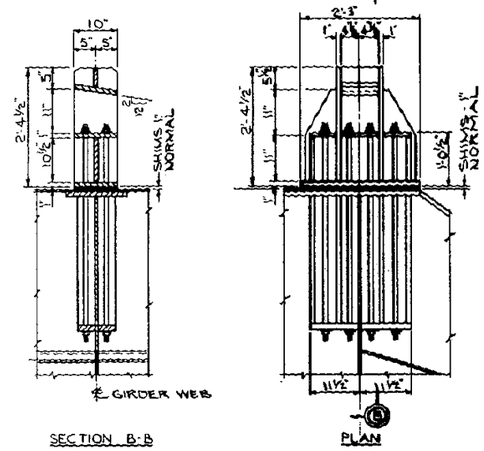

SECTION B-B

PLAN

GATE LEAF LATCH

NOTE:

1. DIMENSIONS AND DETAILS SHOWN ARE TYPICAL AND VARY AS REQUIRED BY GATE SIZE.

MITER GATES
HORIZONTALLY FRAMED
UPPER AND LOWER
LATCHING DEVICES

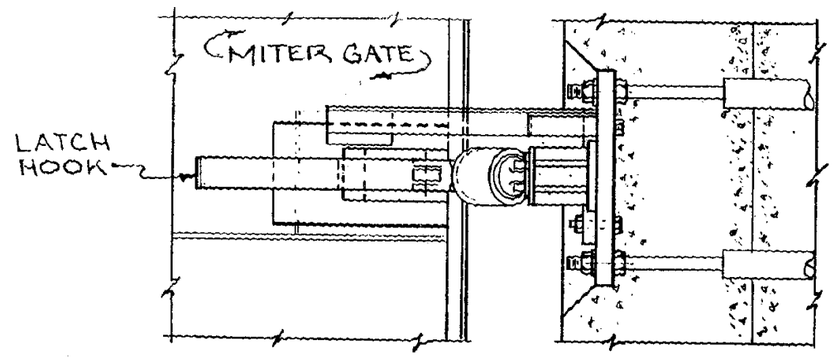

PLAN

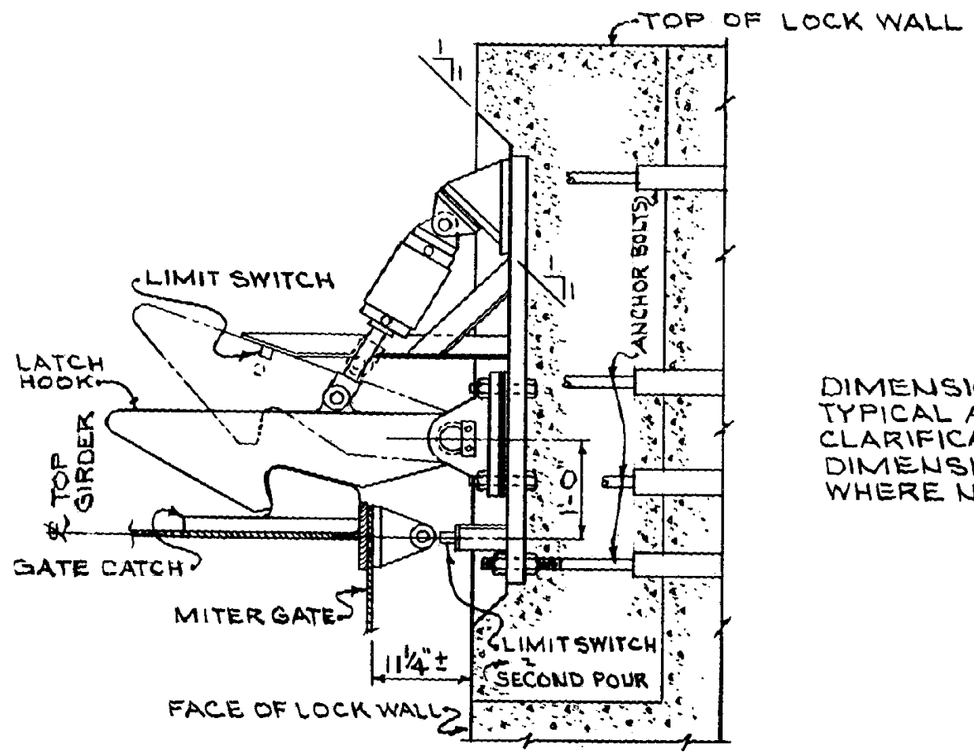

ELEVATION
LATCHING DEVICE

DIMENSIONS SHOWN ARE TYPICAL AND USED FOR CLARIFICATION ONLY. DIMENSIONS MAY CHANGE WHERE NECESSARY.

MITER GATES
HORIZONTALLY FRAMED
AUTOMATIC
LATCHING DEVICE

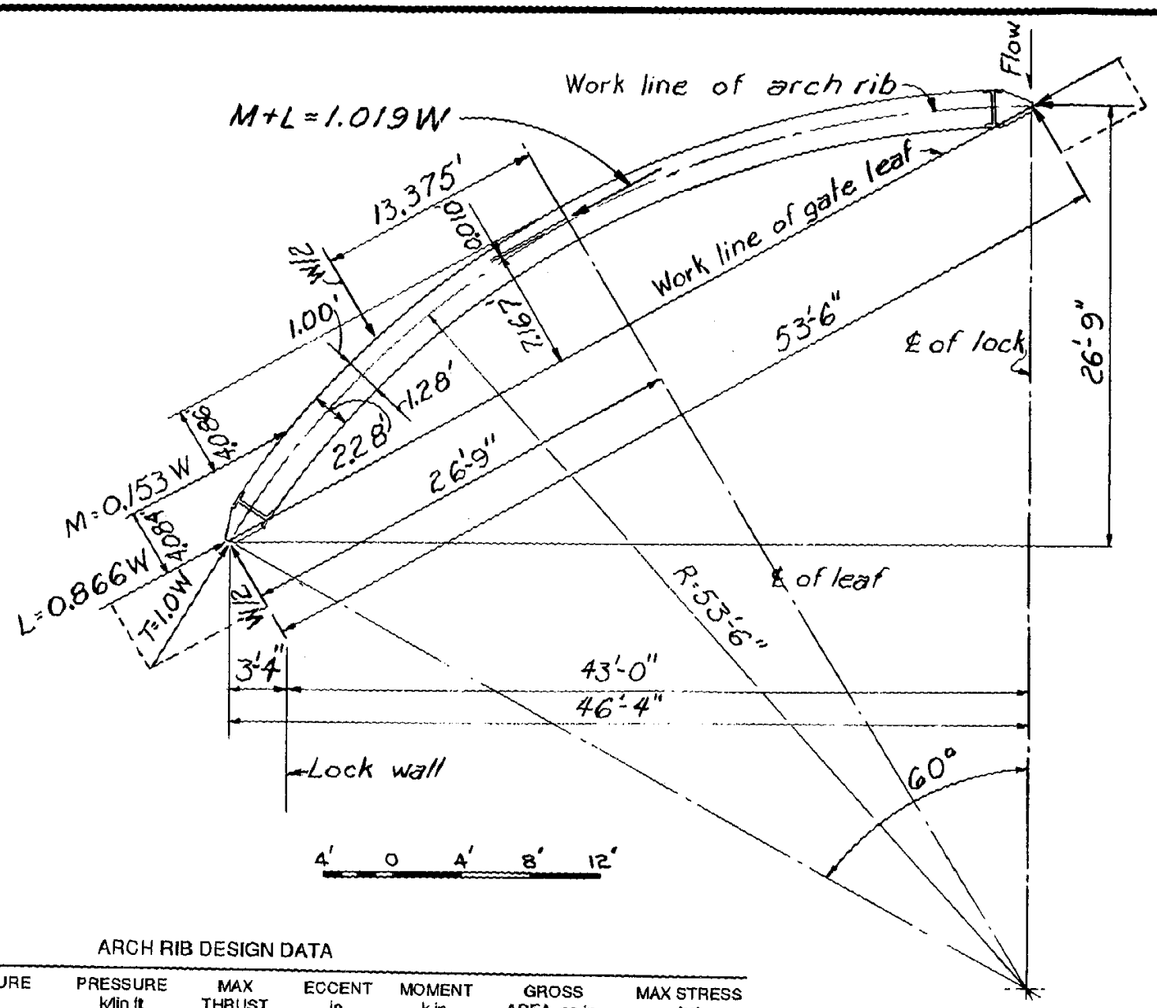

ARCH RIB DESIGN DATA

RIB NO.	DESIGN HEAD, ft	PRESSURE ksf	PRESSURE k/in ft	MAX THRUST	ECCENT in.	MOMENT k·in.	GROSS AREA, sq in.	MAX STRESS ksi
1 to 15	107.5	6.72	17.34	945	0.35	331	67.06	14.69
16 to 22	82.0	5.13	14.75	804	0.54	434	61.54	14.04
23 to 27	60.5	3.78	12.76	696	1.45	1082	59.34	14.01
28 to 30	42.0	2.53	10.51	573	2.28	1306	55.41	13.47
31 to 33	29.5	1.84	8.74	476	3.16	1506	53.35	13.40
34 to 36	20.0	1.25	5.97	326	2.74	893	35.97	13.20
37	Designed for operating loads: Max 25 ksi							

MITER GATES
HORIZONTALLY FRAMED
GEOMETRY AND FORCES
ON ARCH

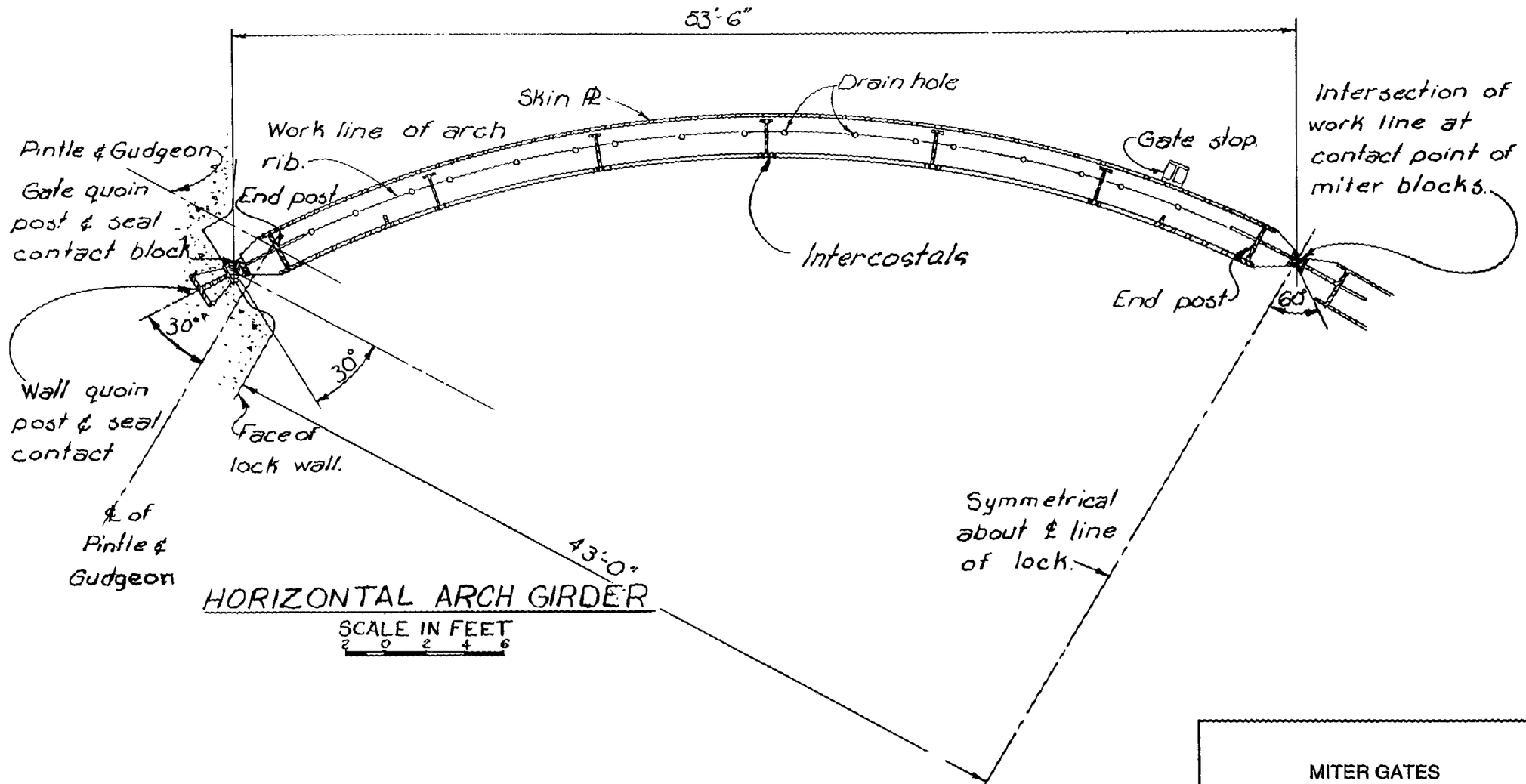

MITER GATES
HORIZONTALLY FRAMED
TYPICAL ARCH GIRDER

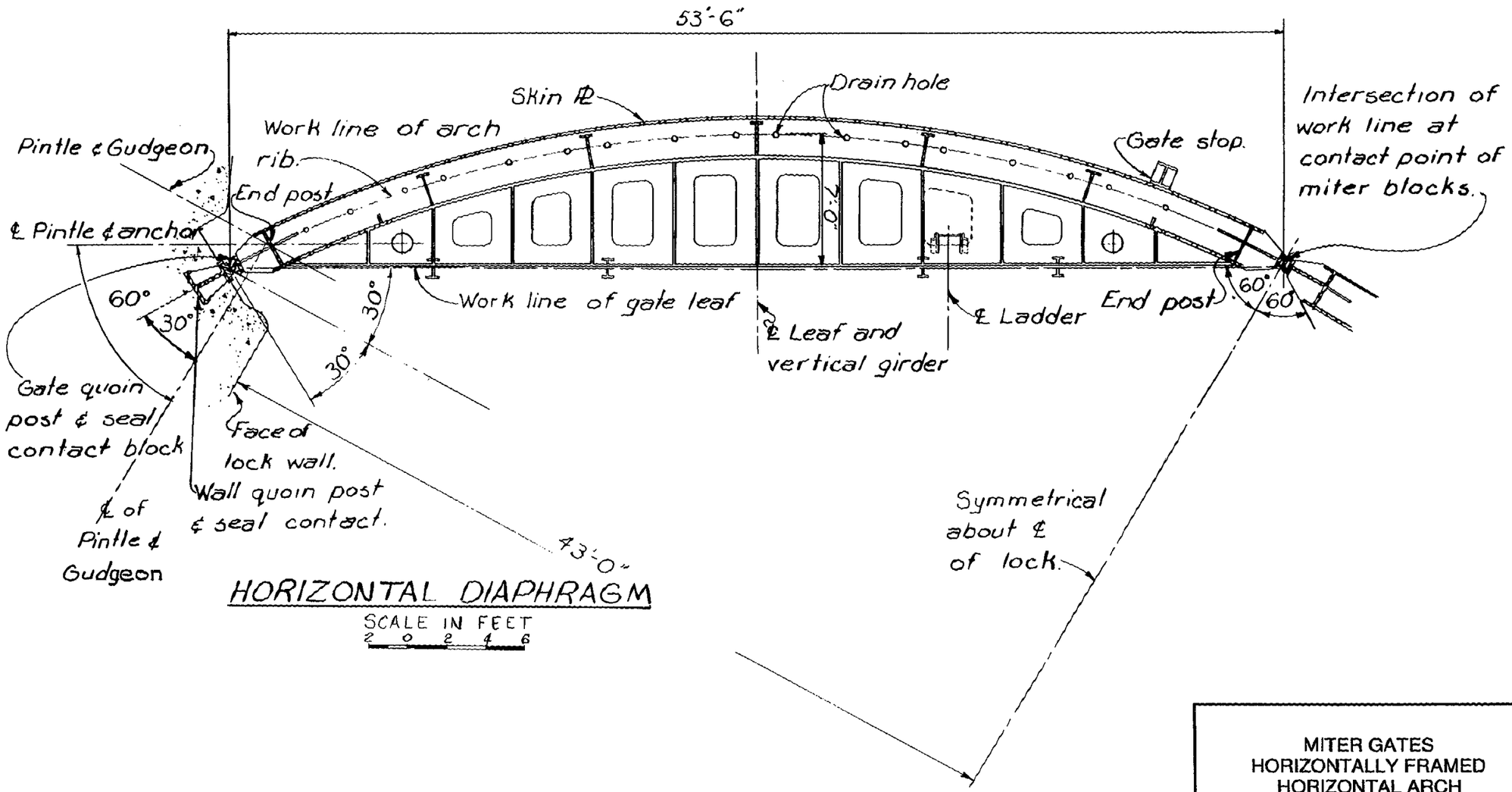

HORIZONTAL DIAPHRAGM

SCALE IN FEET
2 0 2 4 6

MITER GATES
HORIZONTALLY FRAMED
HORIZONTAL ARCH
DIAPHRAGM

QUOIN BLOCK AND QUOIN WATERSEAL
VERTICALLY FRAMED GATE

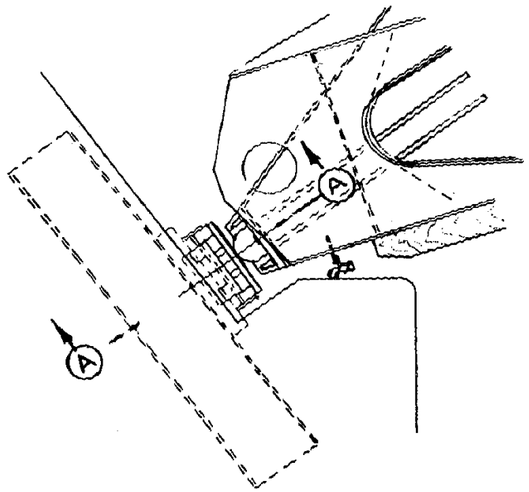

PLAN OF QUOIN BLOCK

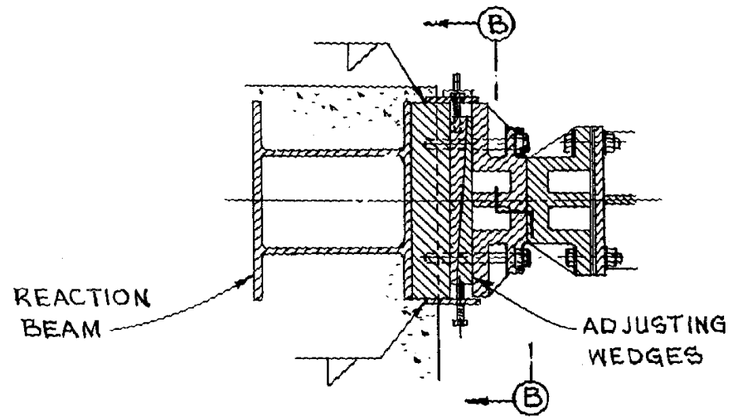

SECTION A-A

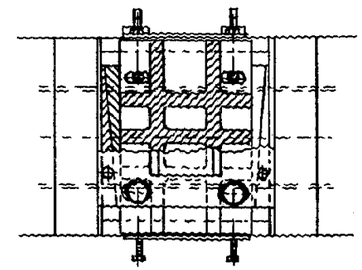

SECTION B-B

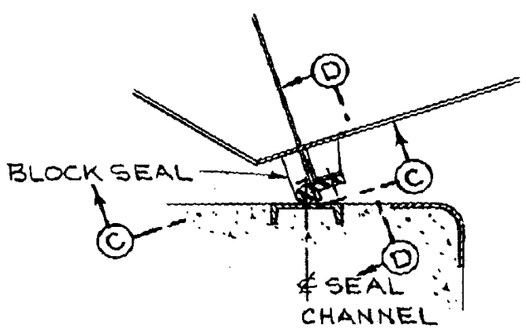

PLAN OF QUOIN WATER SEAL

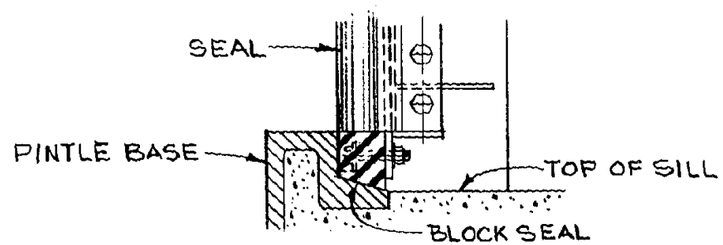

SECTION C-C

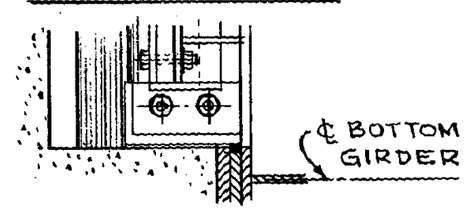

SECTION D-D

THESE DETAILS ARE SHOWN AS AN INDICATION OF THOSE ON EXISTING STRUCTURES.

MITER GATES
VERTICALLY FRAMED
QUOIN BLOCKS AND
SEALS

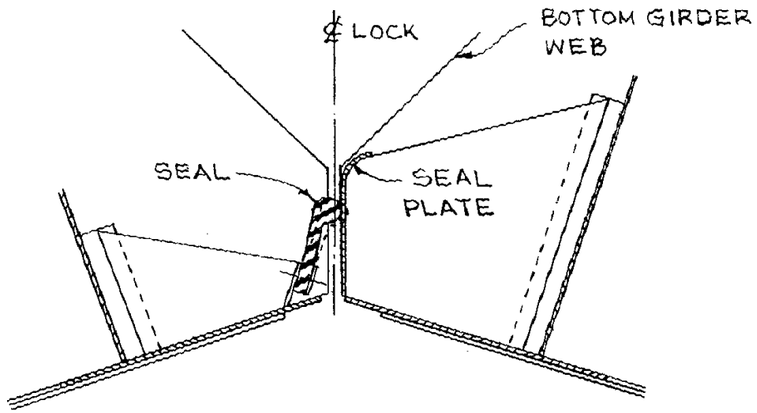

TYPICAL SECTION BELOW TOP GIRDER

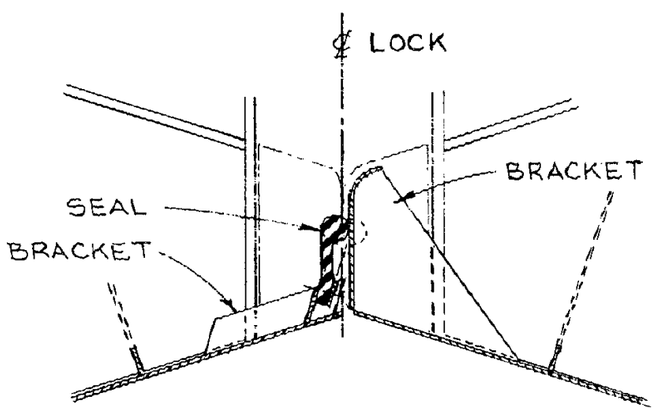

TYPICAL SECTION ABOVE TOP GIRDER

MITER WATER SEALS

VERTICALLY FRAMED GATE

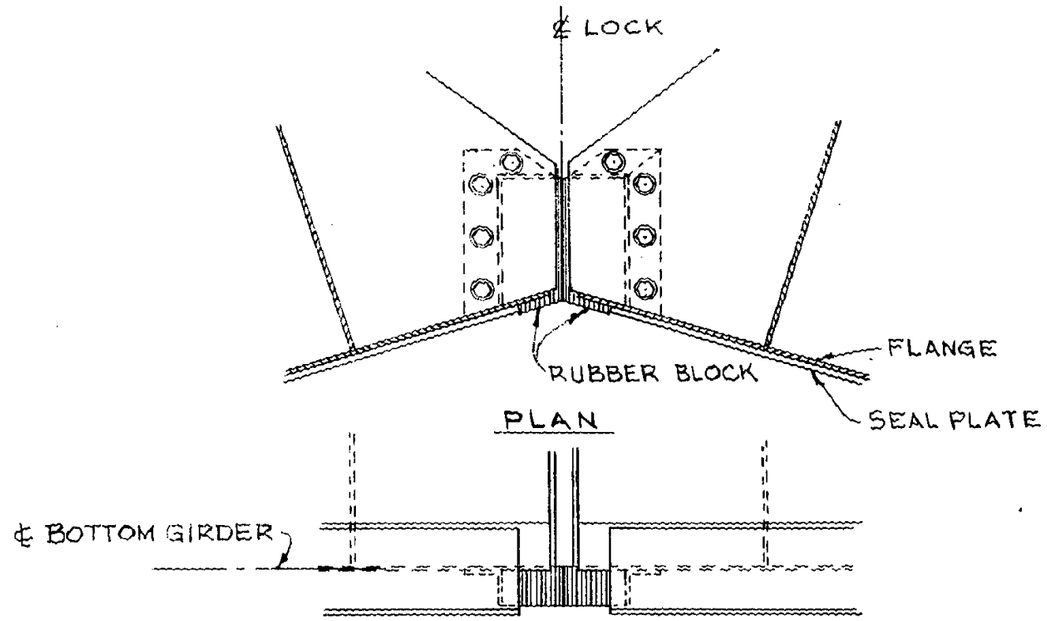

WATER STOP BELOW BOTTOM GIRDER

THESE DETAILS ARE SHOWN AS AN INDICATION OF THOSE ON EXISTING STRUCTURES

MITER GATES
VERTICALLY FRAMED
MITER SEALS

PINTLE AND SILL DETAIL
VERTICALLY FRAMED GATE

DIMENSIONS SHOWN ARE TYPICAL AND SHOWN FOR CLARIFICATION ONLY DIMENSIONS MAY CHANGE WHERE NECESSARY.

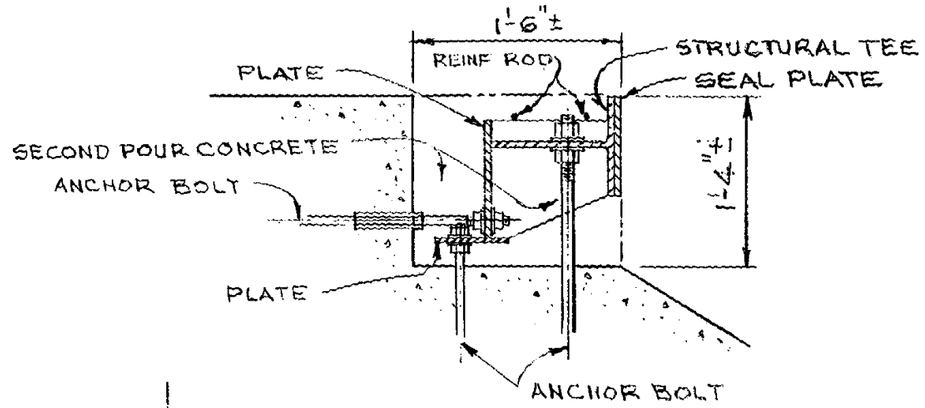

SECTION A-A

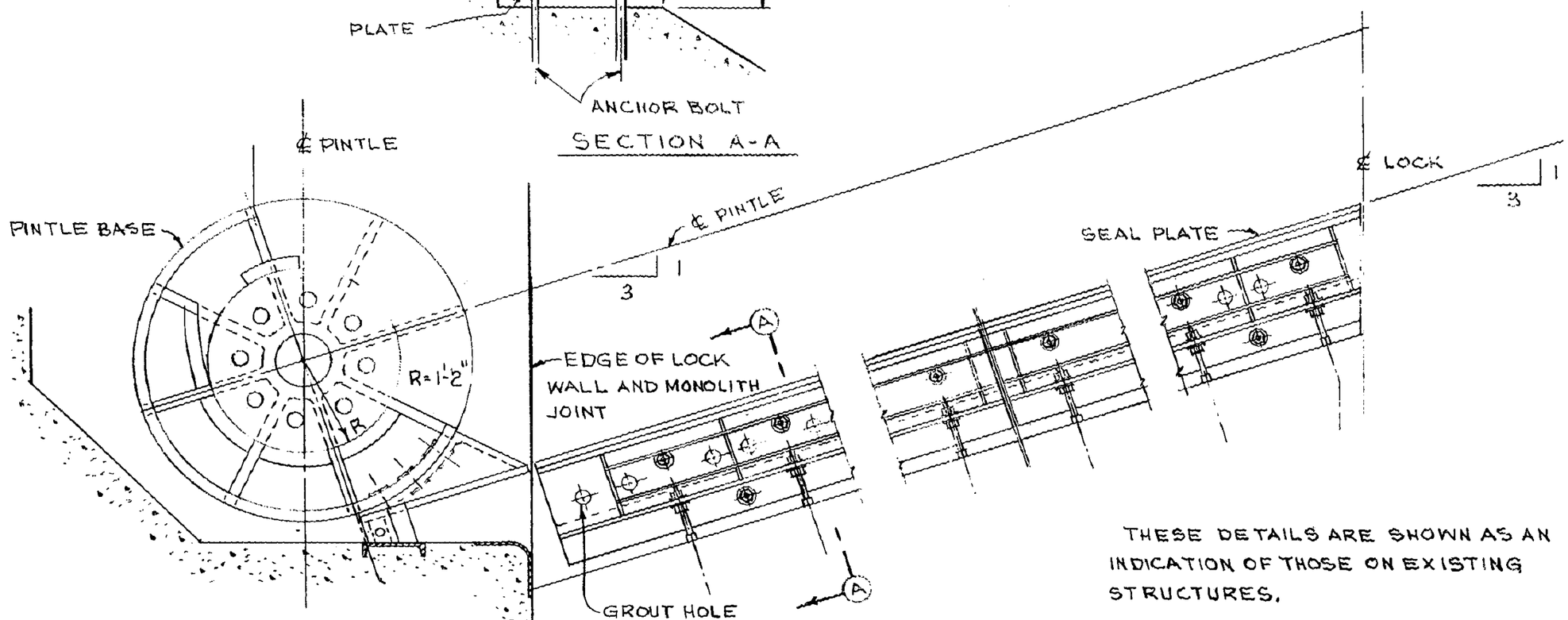

HALF PLAN OF MITER SILL

THESE DETAILS ARE SHOWN AS AN INDICATION OF THOSE ON EXISTING STRUCTURES.

MITER GATES
VERTICALLY FRAMED
PINTLE AND SILL DETAILS

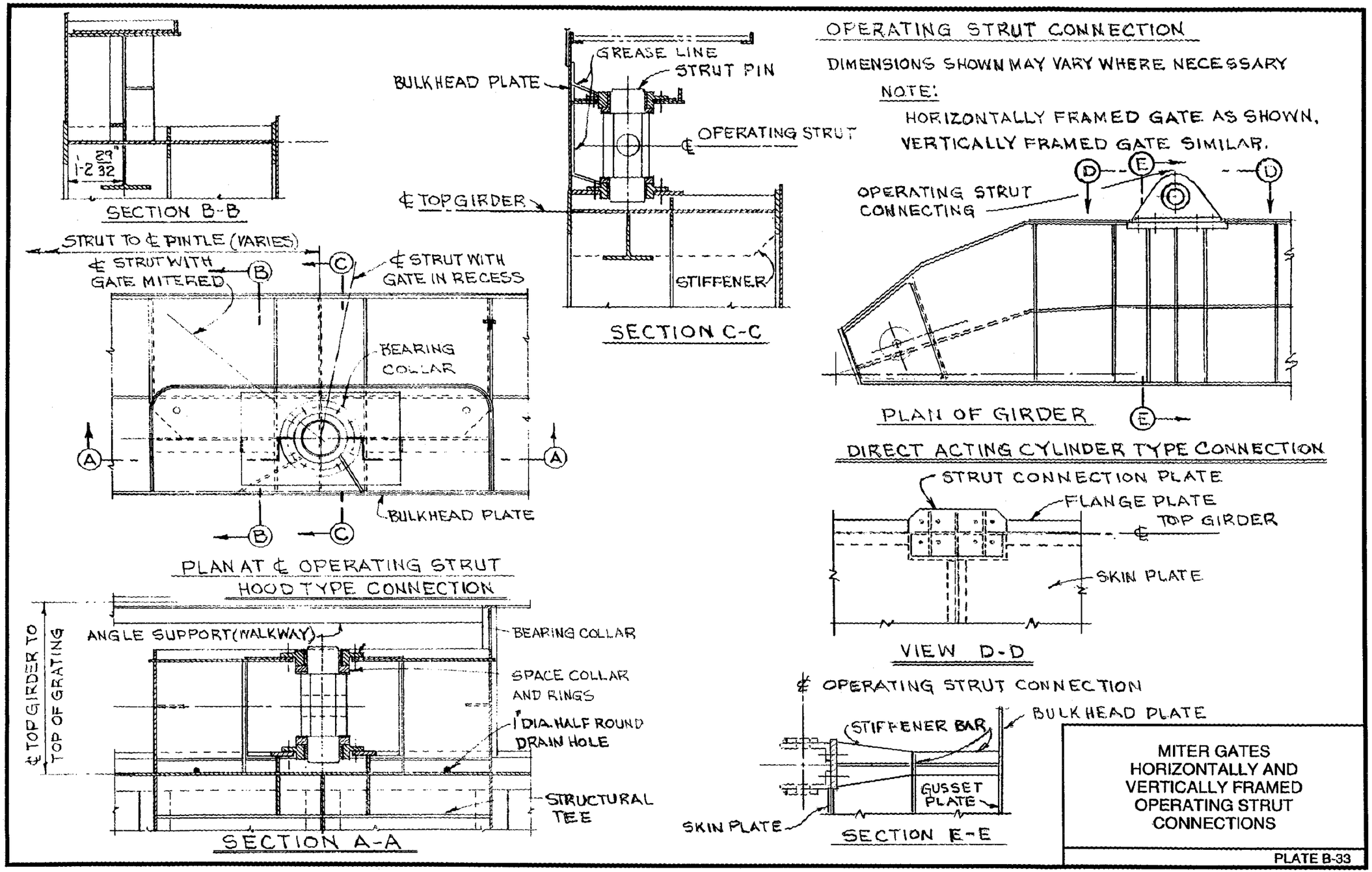

MITER GATES HORIZONTALLY AND VERTICALLY FRAMED OPERATING STRUT CONNECTIONS

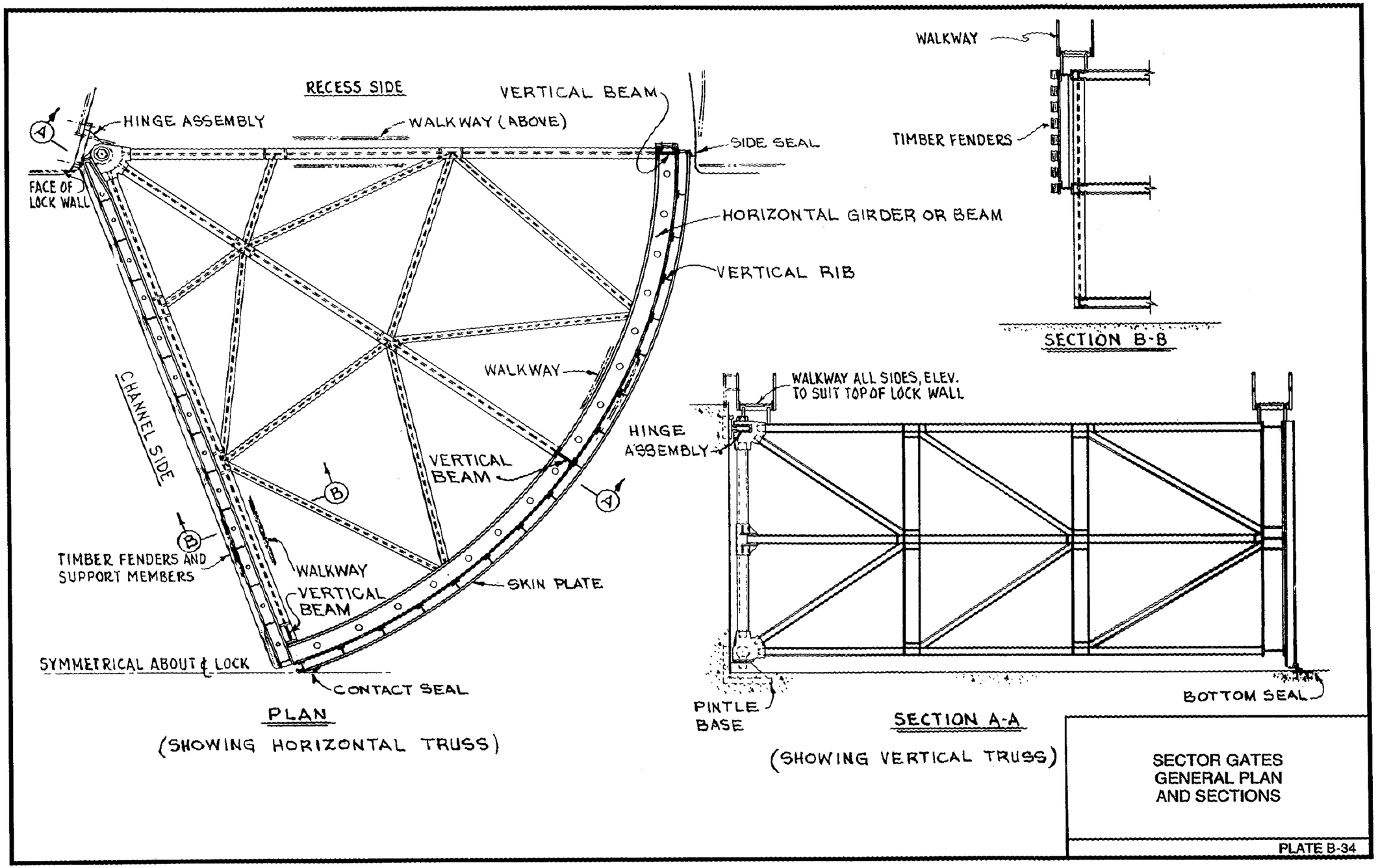

SECTOR GATES
GENERAL PLAN
AND SECTIONS

PLATE B-34

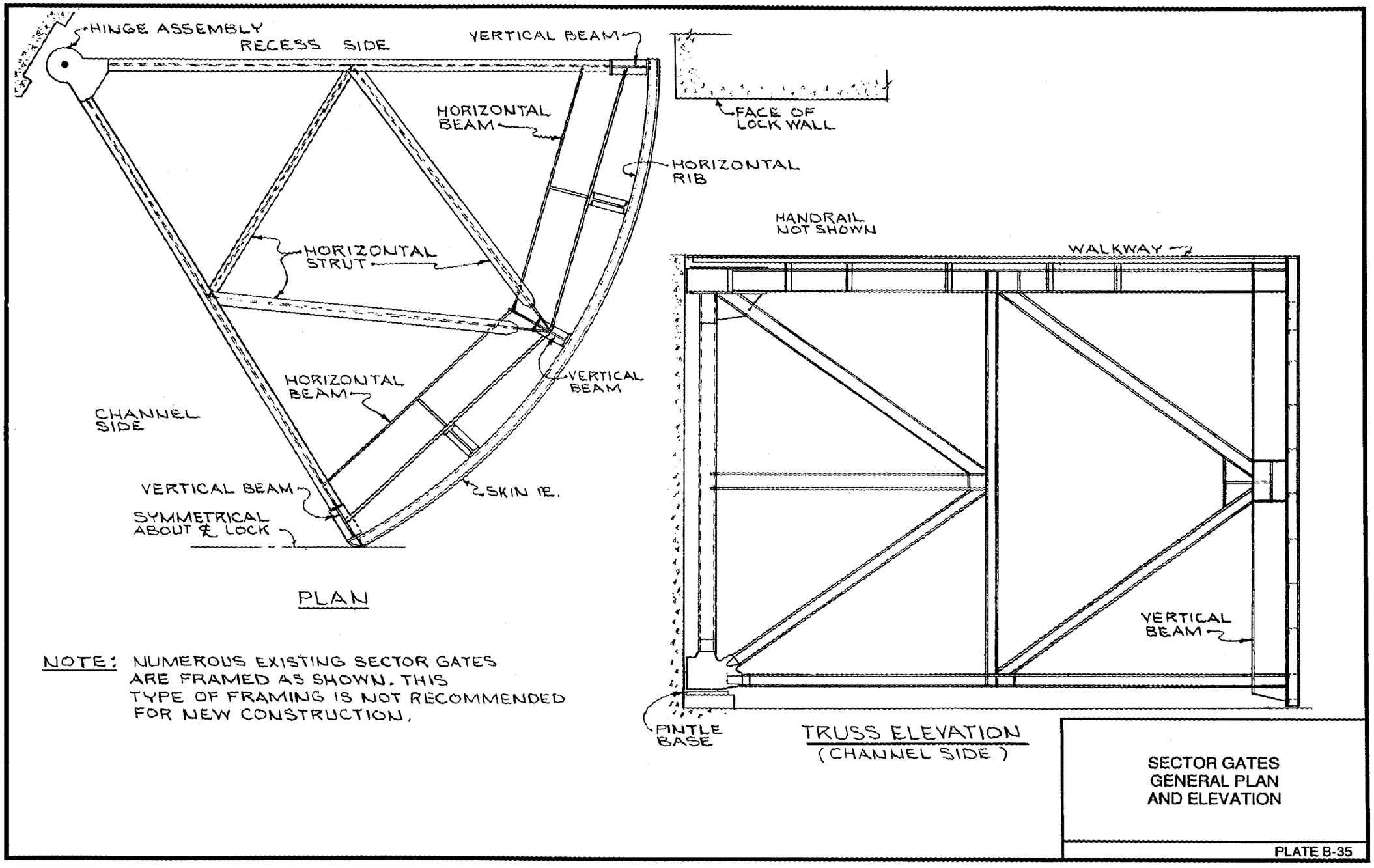

SECTOR GATES
GENERAL PLAN
AND ELEVATION

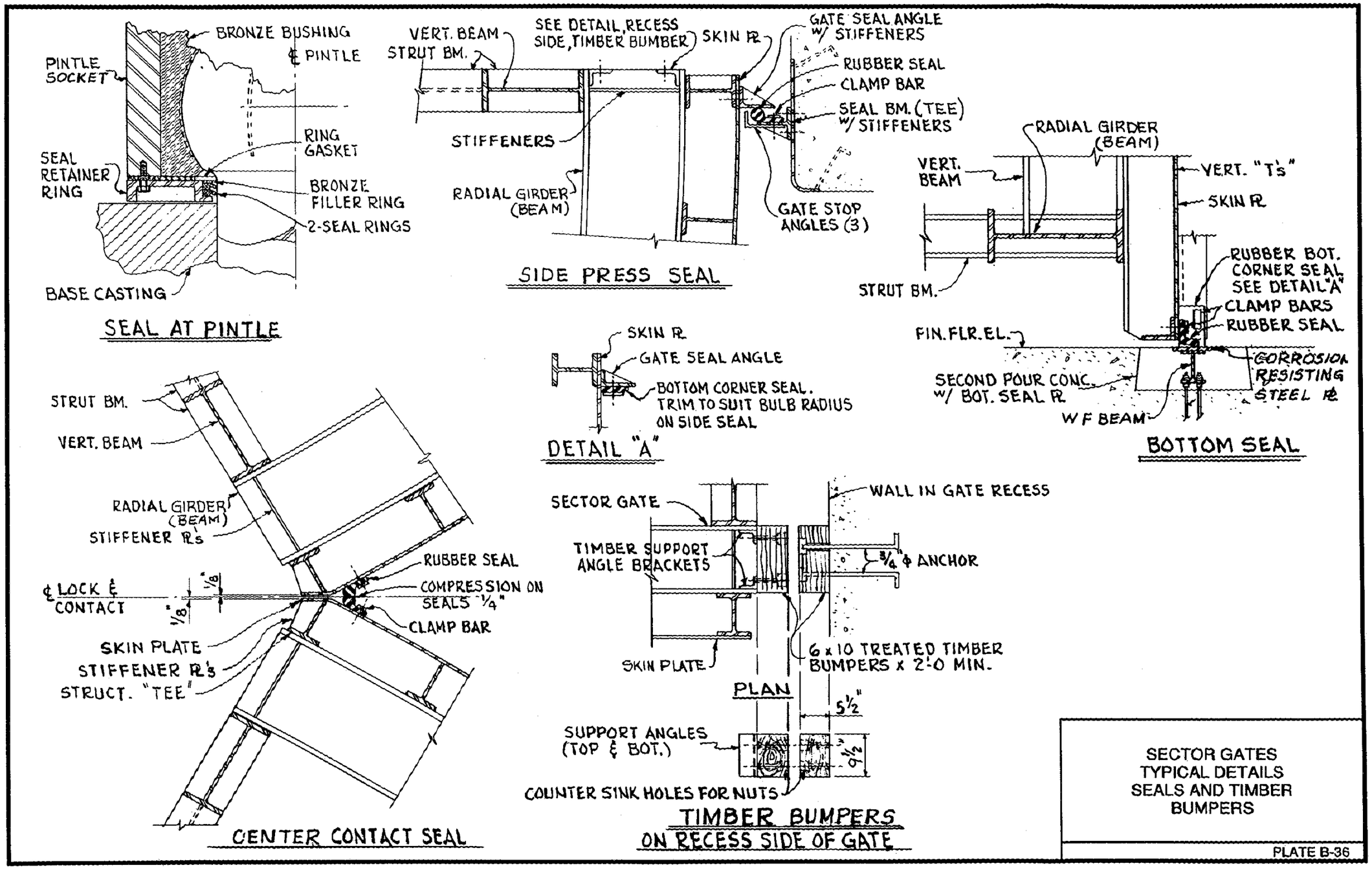

SECTOR GATES
TYPICAL DETAILS
SEALS AND TIMBER
BUMPERS

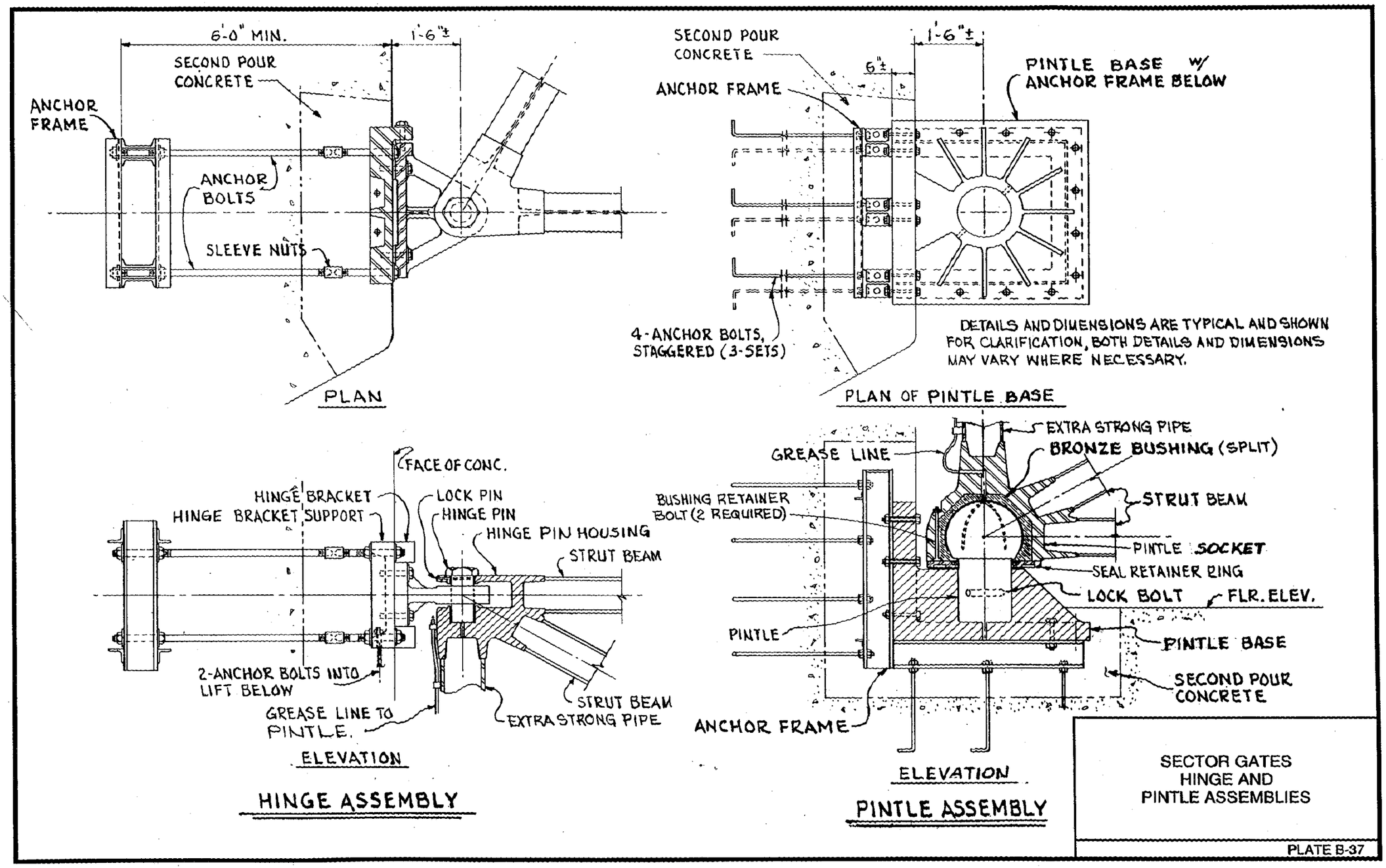

SECTOR GATES
HINGE AND
PINTLE ASSEMBLIES

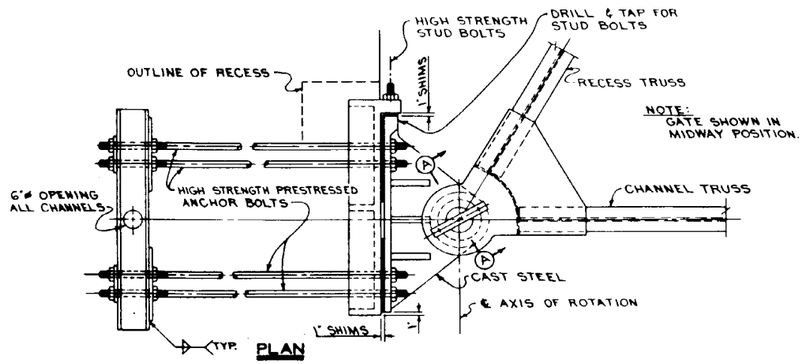

PLAN

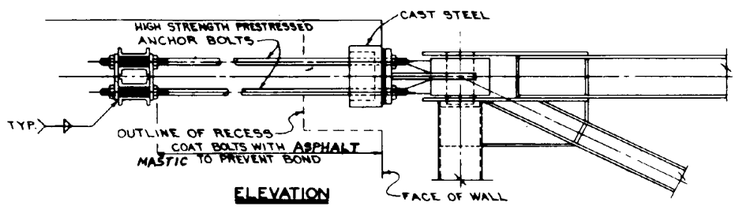

ELEVATION

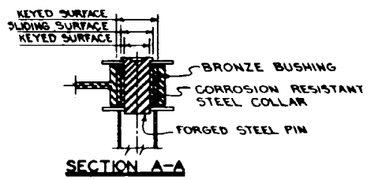

SECTION A-A

HINGE ASSEMBLY
SCALE: 3/4" = 1'-0"

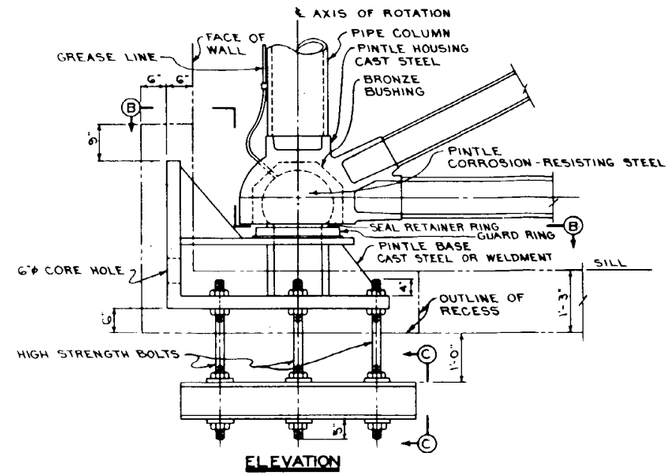

ELEVATION

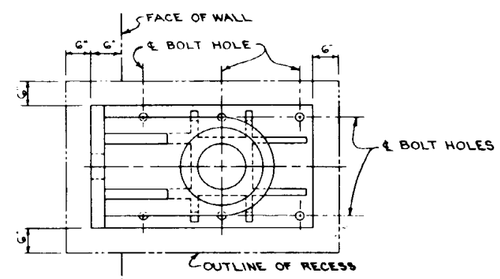

SECTION B-B

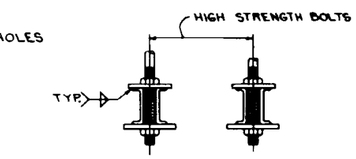

SECTION C-C

PINTLE ASSEMBLY
SCALE: 1" = 1'-0"

SECTOR GATES
ALTERNATE HINGE AND
PINTLE ASSEMBLIES

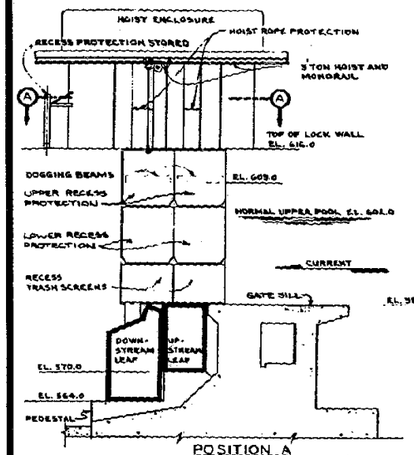

POSITION A
GATES OPEN—(STORED POSITION)
5 TON HOIST TO BE CONNECTED TO TOP RECESS PROTECTION FOR DOWNSTREAM LEAF WHEN GATE LEAVES ARE STORED

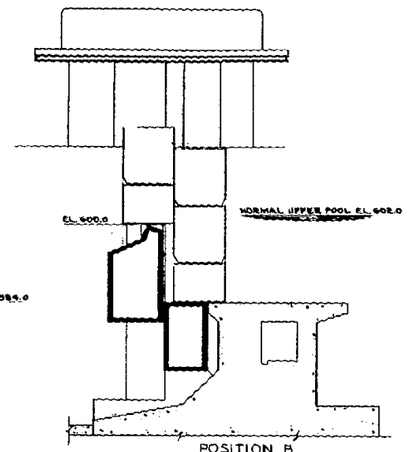

POSITION B
FLUSHING POSITION—NORMAL UPPER POOL
FOR FLUSHING SILT FROM UNDER GATE LEAVES:
a.—REMOVE UPPER RECESS PROTECTION ON DOWNSTREAM LEAF
b.—LIFT DOWNSTREAM LEAF TO EL. 602.0
c.—OPEN UPPER MITER GATE AND ENGAGE UPPER LATCHES
d.—OPEN LOCK EMPTYING VALVES.
e.—LOWER DOWNSTREAM LEAF TO EL. 600.0

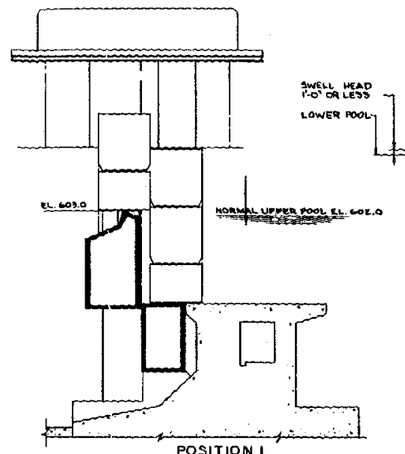

POSITION 1
EMERGENCY POSITION OR BULKHEAD POSITION
NORMAL UPPER POOL
a.—REMOVE UPPER RECESS PROTECTION ON DOWNSTREAM LEAF
b.—LIFT DOWNSTREAM LEAF TO EL. 603.0
c.—FOR BULKHEAD POSITION INSTALL SEALS.
FOR REMOVAL OF TRASH IN LOCK APPROACH
a.—DUPLICATE ABOVE STEPS a AND b.
b.—OPEN THE MITER GATES AND ENGAGE UPPER LATCHES
c.—LOWER EMERGENCY GATE SUFFICIENTLY TO ALLOW PASSING OF DEBRIS.
d.—LIFT DOWNSTREAM LEAF TO EL. 603.0
e.—CLOSE MITER GATES.

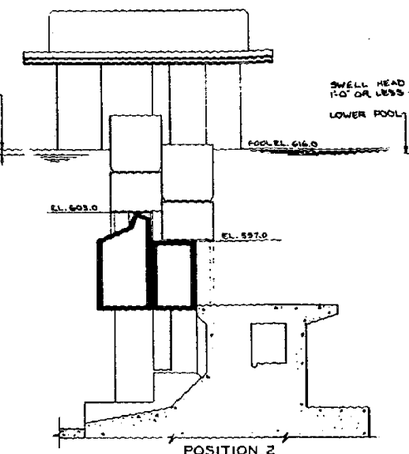

POSITION 2
INTERMEDIATE POSITION—UPPER POOL
BETWEEN 602.0 & 616.0
a.—WITH 5 TON HOIST CONNECTED TO UPPER RECESS PROTECTION FOR DOWNSTREAM LEAF, LIFT DOWNSTREAM LEAF TO EL. 603.0 REMOVE UPPER RECESS PROTECTION WHEN BOTTOM OF PROTECTION IS ABOVE UPPER POOL ELEVATION.
b.—WITH 5 TON HOIST CONNECTED TO UPPER RECESS PROTECTION FOR UPSTREAM LEAF, LIFT UPSTREAM LEAF TO EL. 597.0 REMOVE UPPER RECESS PROTECTION WHEN BOTTOM OF PROTECTION IS ABOVE UPPER POOL ELEVATION.

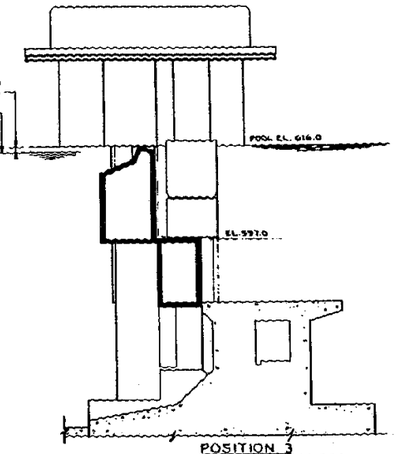

POSITION 3
FULLY CLOSED POSITION—UPPER POOL
BETWEEN 602.0 & 616.0
a.—OPERATE DOWNSTREAM AND UPSTREAM LEAVES AS IN POSITION 2.
b.—WITH 5 TON HOIST CONNECTED TO LOWER RECESS PROTECTION FOR DOWNSTREAM LEAF, CONTINUE TO LIFT DOWNSTREAM LEAF. REMOVE LOWER PROTECTION WHEN BOTTOM OF PROTECTION IS ABOVE UPPER POOL ELEVATION.
c.—WITH 5 TON HOIST CONNECTED TO RECESS TRASH SCREEN FOR DOWNSTREAM LEAF, CONTINUE TO LIFT DOWNSTREAM LEAF. REMOVE WALKWAY BEAMS AND WALKWAY FOR DOWNSTREAM RECESS AT EL. 615.0. REMOVE TRASH SCREEN WHEN BOTTOM OF SCREEN IS ABOVE UPPER POOL ELEVATION. LIFT LEAF TO EL. 616.0.

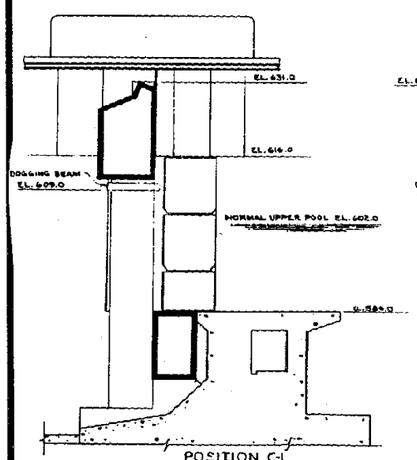

POSITION C-1
HIGHEST POSITION—DOWNSTREAM LEAF
a.—OPERATE DOWNSTREAM LEAF AS IN POSITIONS 2 AND 3
b.—REMOVE GRATINGS AND HOIST ROPE PROTECTIONS, WHEN LEAF IS AT EL. 615.0
c.—LIFT LEAF TO EL. 631.0

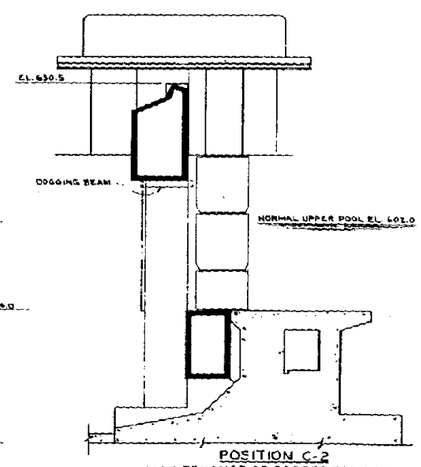

POSITION C-2
MAINTENANCE OR DOGGED POSITION
DOWNSTREAM LEAF
a.—AFTER LIFTING LEAF AS DESCRIBED IN POSITION C-1, MOVE DOGGING BEAMS UNDER GATE.
b.—LOWER GATE ONTO DOGGING BEAMS.

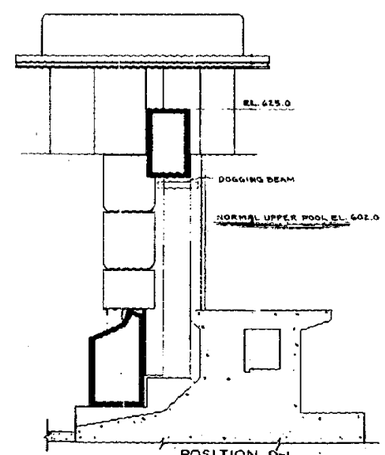

POSITION D-1
HIGHEST POSITION—UPSTREAM LEAF
a.—OPERATE UPSTREAM LEAF WITH PROCEDURE USED FOR DOWNSTREAM LEAF FOR REMOVAL OF RECESS PROTECTION AND TRASH SCREEN.
b.—REMOVE WALKWAYS, GRATINGS AND HOIST ROPE PROTECTIONS WHEN LEAF IS AT EL. 618.0
c.—LIFT LEAF TO EL. 625.0

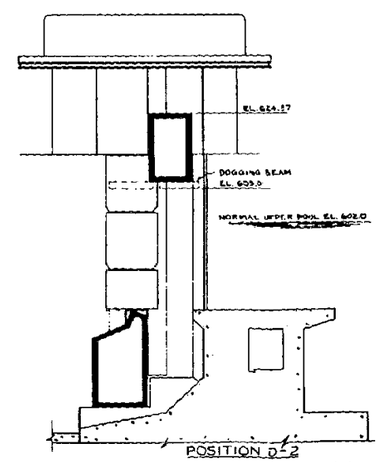

POSITION D-2
MAINTENANCE OR DOGGED POSITION
UPSTREAM LEAF
a.—AFTER LIFTING LEAF AS DESCRIBED IN POSITION D-1, MOVE DOGGING BEAMS UNDER GATE.
b.—LOWER GATE ONTO DOGGING BEAMS.

0 4 8 12 16 20 24
SCALE: 1/16" = 1'-0"

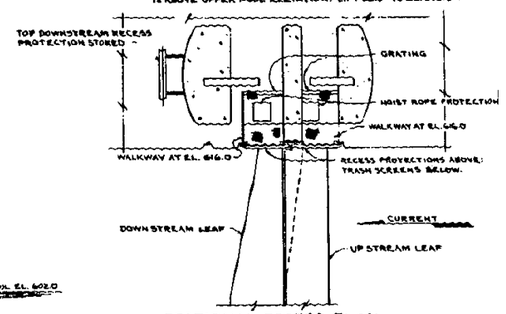

SECTIONAL RECESS PLAN
SECTION A-A

EMERGENCY GATE OPERATING PROCEDURE

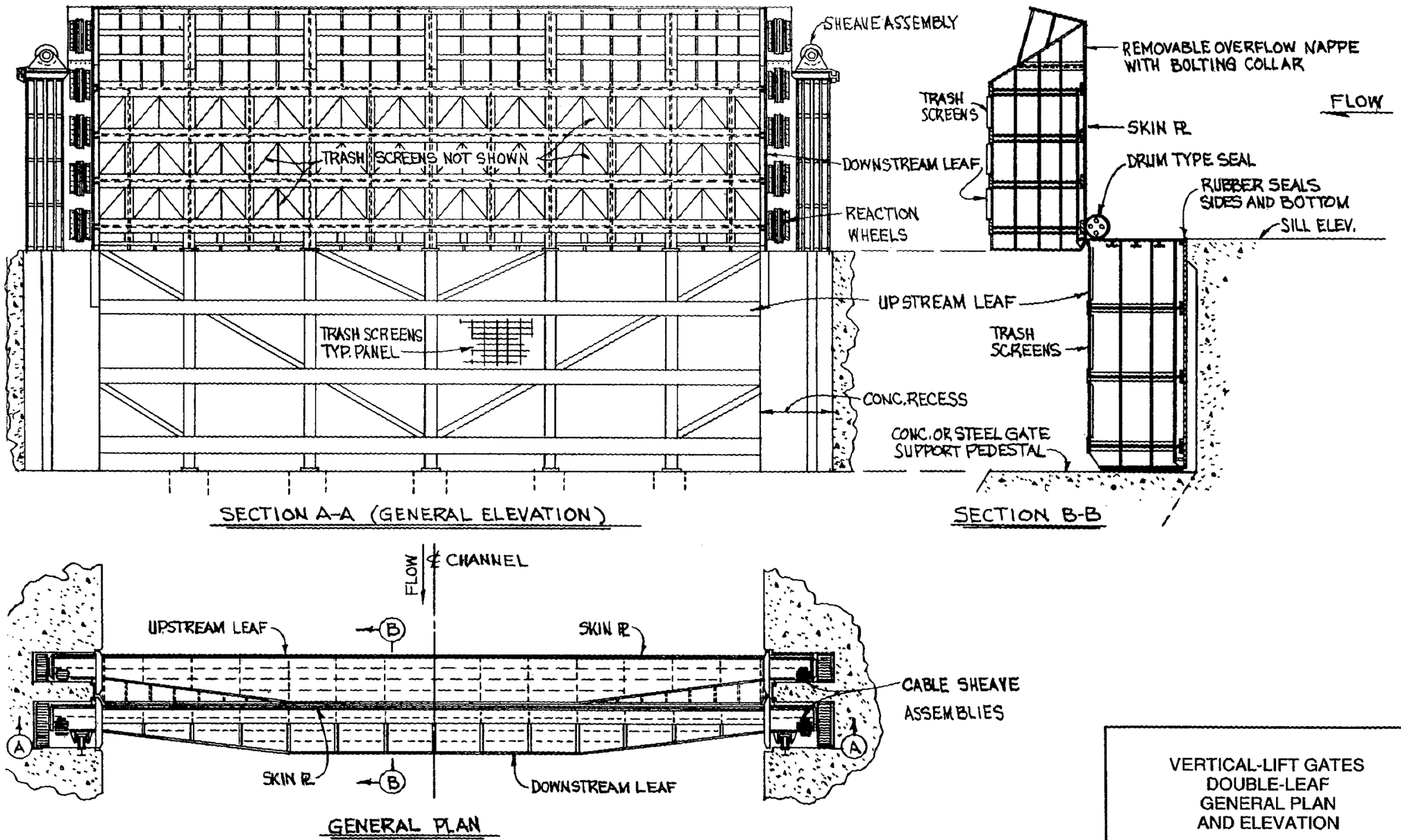

VERTICAL-LIFT GATES
DOUBLE-LEAF
GENERAL PLAN
AND ELEVATION

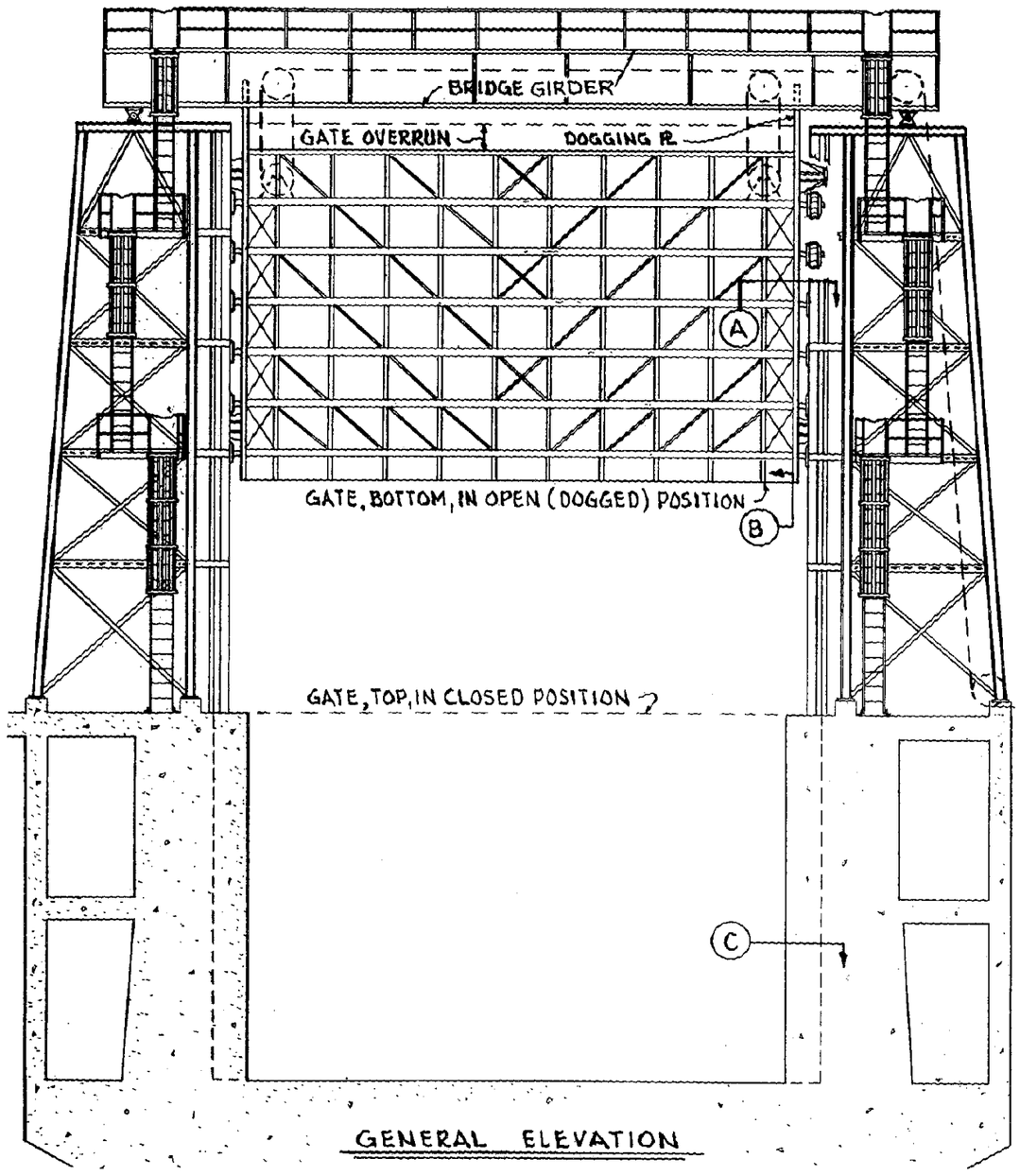

GENERAL ELEVATION

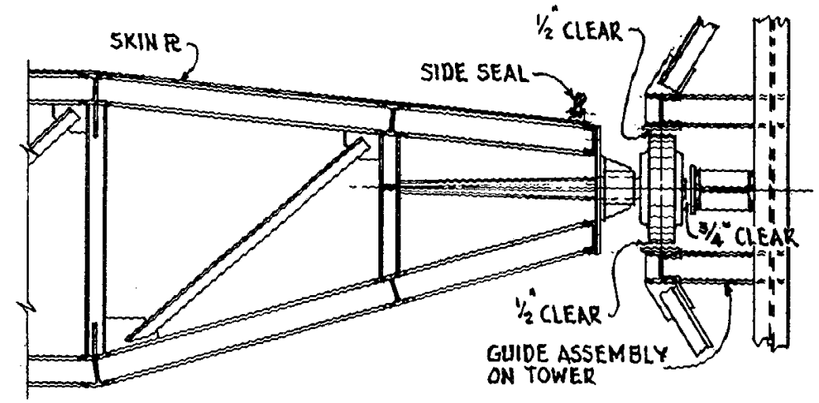

SECTION A-A

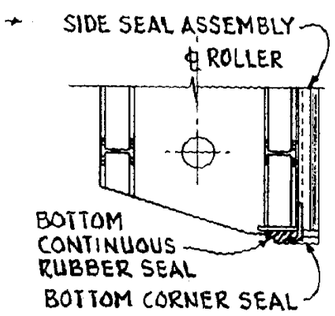

SECTION B-B

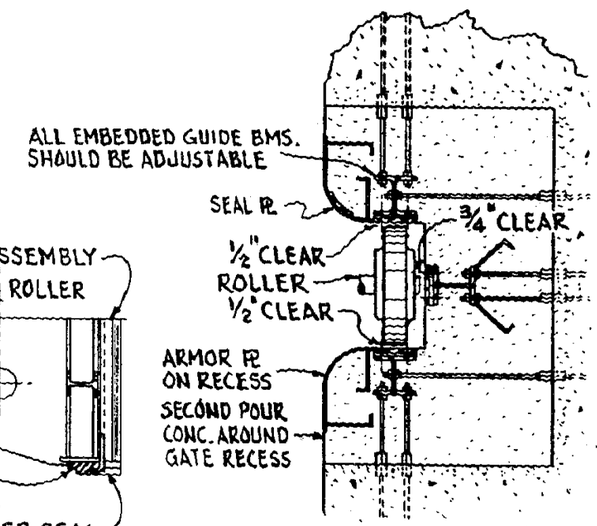

SECTION C-C

DIMENSIONS AND DETAILS SHOWN MAY VARY WHERE NECESSARY

VERTICAL-LIFT GATES
SINGLE LEAF WITH TOWERS
GENERAL ELEVATION AND
TYPICAL DETAILS

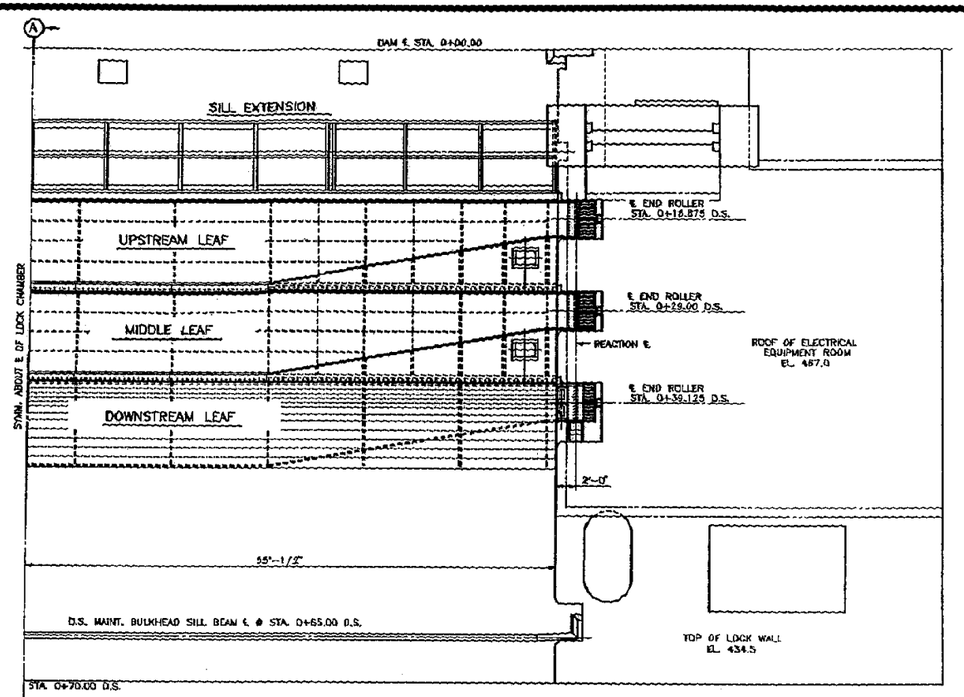

HALF PLAN – LIFT GATE MONO. L-3

SCALE: 1/16"=1'-0"

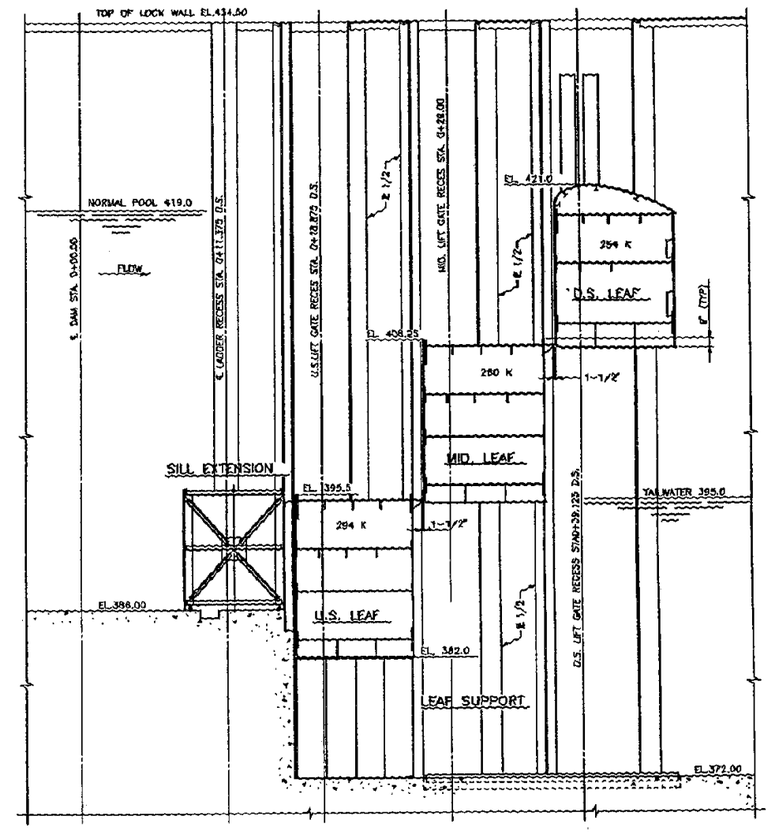

SECTION A-A

SCALE: 1/8"=1'-0"

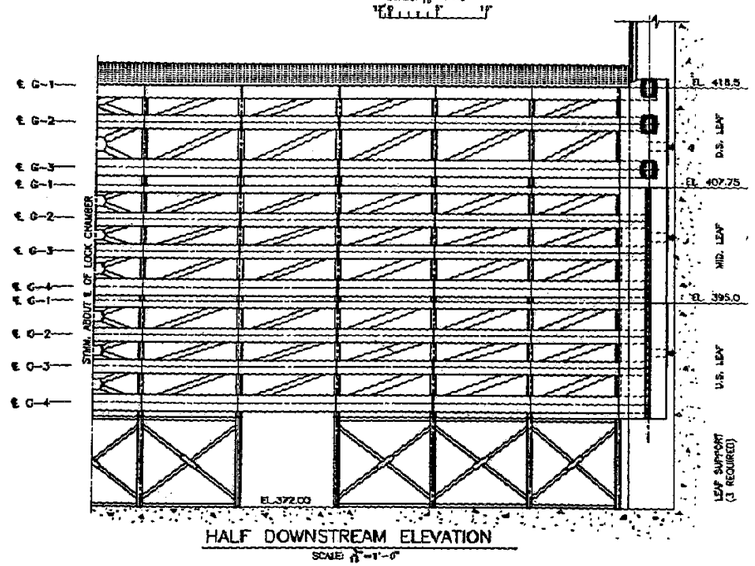

HALF DOWNSTREAM ELEVATION

SCALE: 1/16"=1'-0"

VERTICAL-LIFT GATES
MULTILEAF GATES
GENERAL PLAN AND
ELEVATION

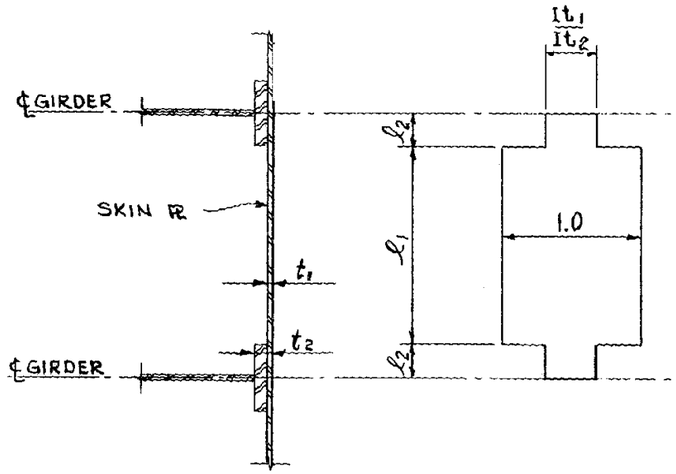

$\frac{1}{EI}$ = 1.0 FOR CENTER OF ANALOGOUS COLUMN

COLUMN AREA $A = (\ell_1 \times 1.0) + 2 \times \ell_2 \times \frac{It_1}{It_2}$

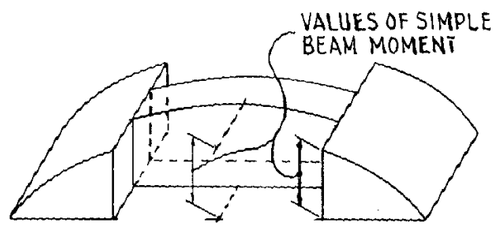

$\frac{M}{EI}$ DIAGRAM

ANALOGOUS COLUMN LOAD IS EQUIVALENT TO THE VOLUME OF THE DIAGRAM SHOWN, USING PARABOLIC CURVES AS THE SHAPE OF THE DIAGRAM.

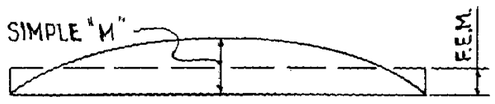

F.E.M. = $\frac{\text{COLUMN LOAD}}{\text{COLUMN AREA}}$

ACTUAL MOMENT = SIMPLE "M" MINUS F.E.M. (MID SPAN)

SKIN PLATE DESIGN DATA

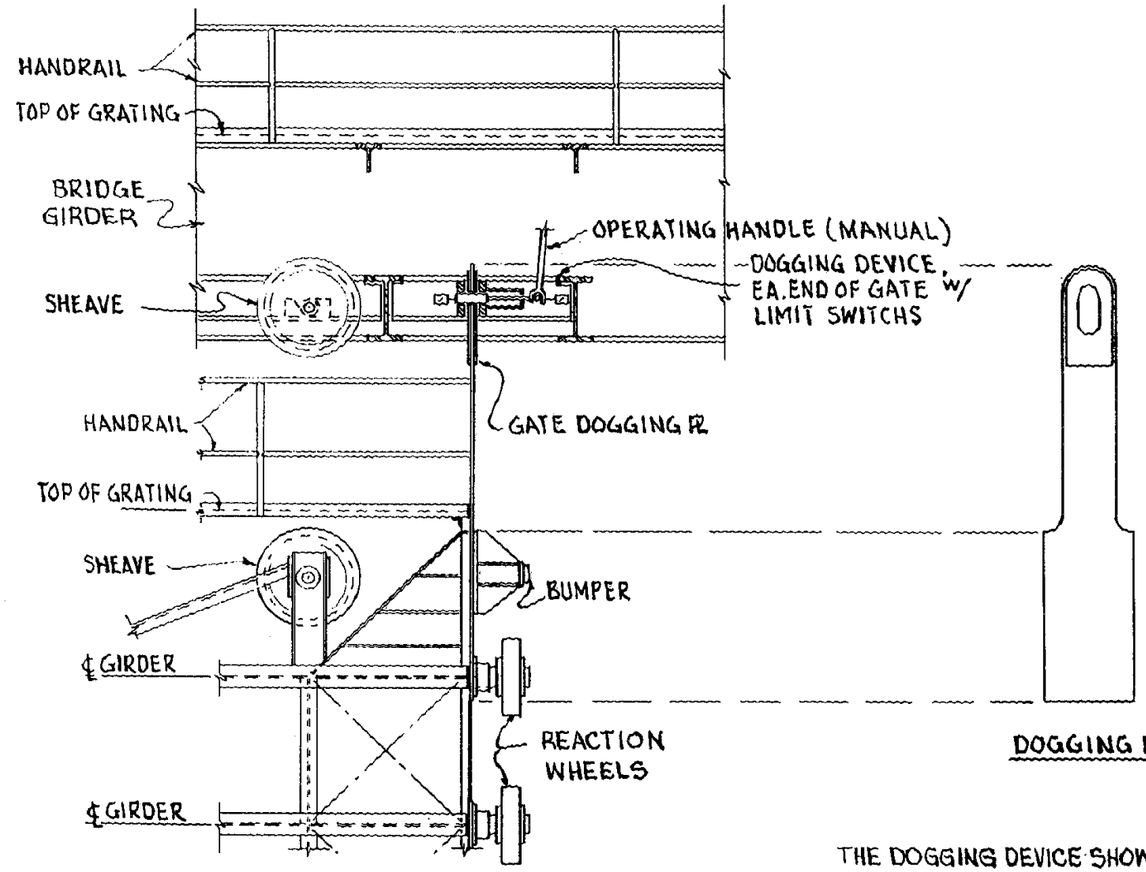

GATE DOGGING DEVICE

DOGGING PL

THE DOGGING DEVICE SHOWN IS FOR A TYPICAL SINGLE-LEAF GATE WITH A BRIDGE SPANNING BETWEEN TOWERS

DETAILS SHOWN ARE FOR INFORMATION AND MAY VARY WHERE NECESSARY.

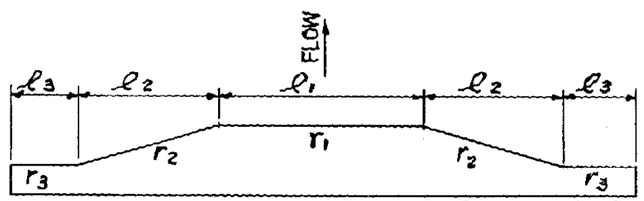

EFFECTIVE RADIUS OF GYRATION = $\frac{(\ell_1 \times r_1) + (2\ell_2 \times r_2) + (2\ell_3 \times r_3)}{\ell_1 + 2\ell_2 + 2\ell_3}$

THE VALUES OF "r" FOR THE TAPERED SECTION SHOULD BE CONSIDERED AS THE AVERAGE OF THE MAXIMUM AND MINIMUM VALUE OF "r".

THE EFFECTIVE LENGTH SHOULD BE THE TOTAL LENGTH OF THE GIRDER, CENTER TO CENTER OF BEARING GIRDERS.

VERTICAL-LIFT GATES
TYPICAL DESIGN DATA

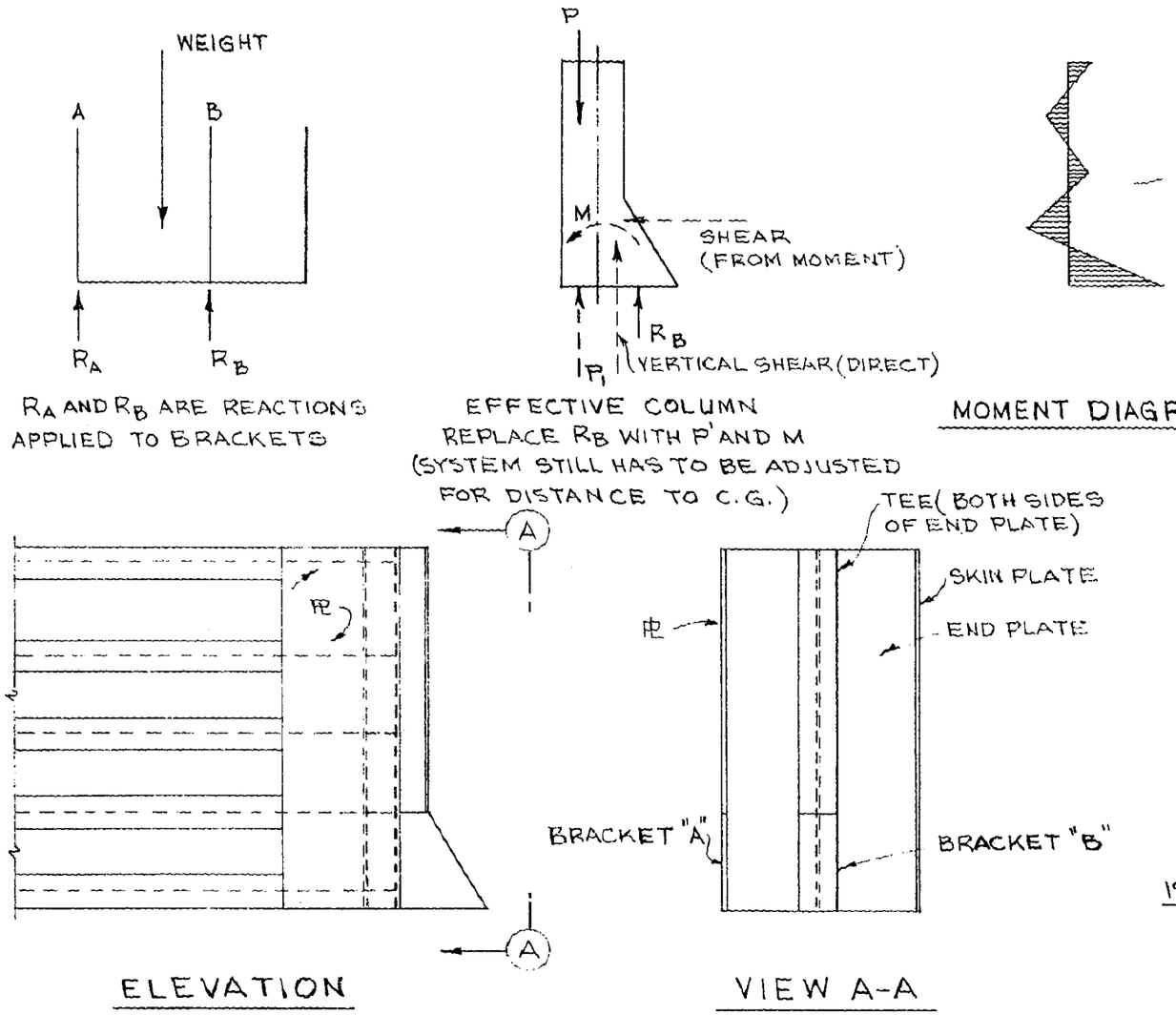

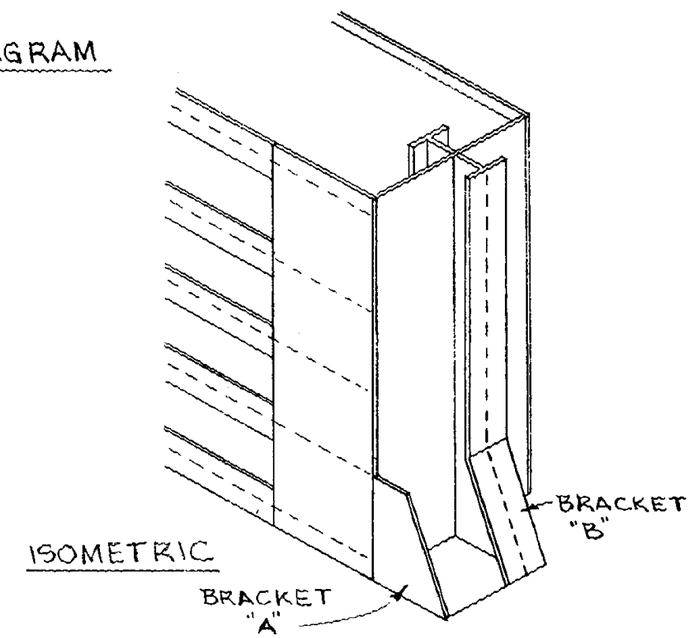

VERTICAL-LIFT GATES
END GIRDERS
SUPPORT BRACKETS
DESIGN DATA

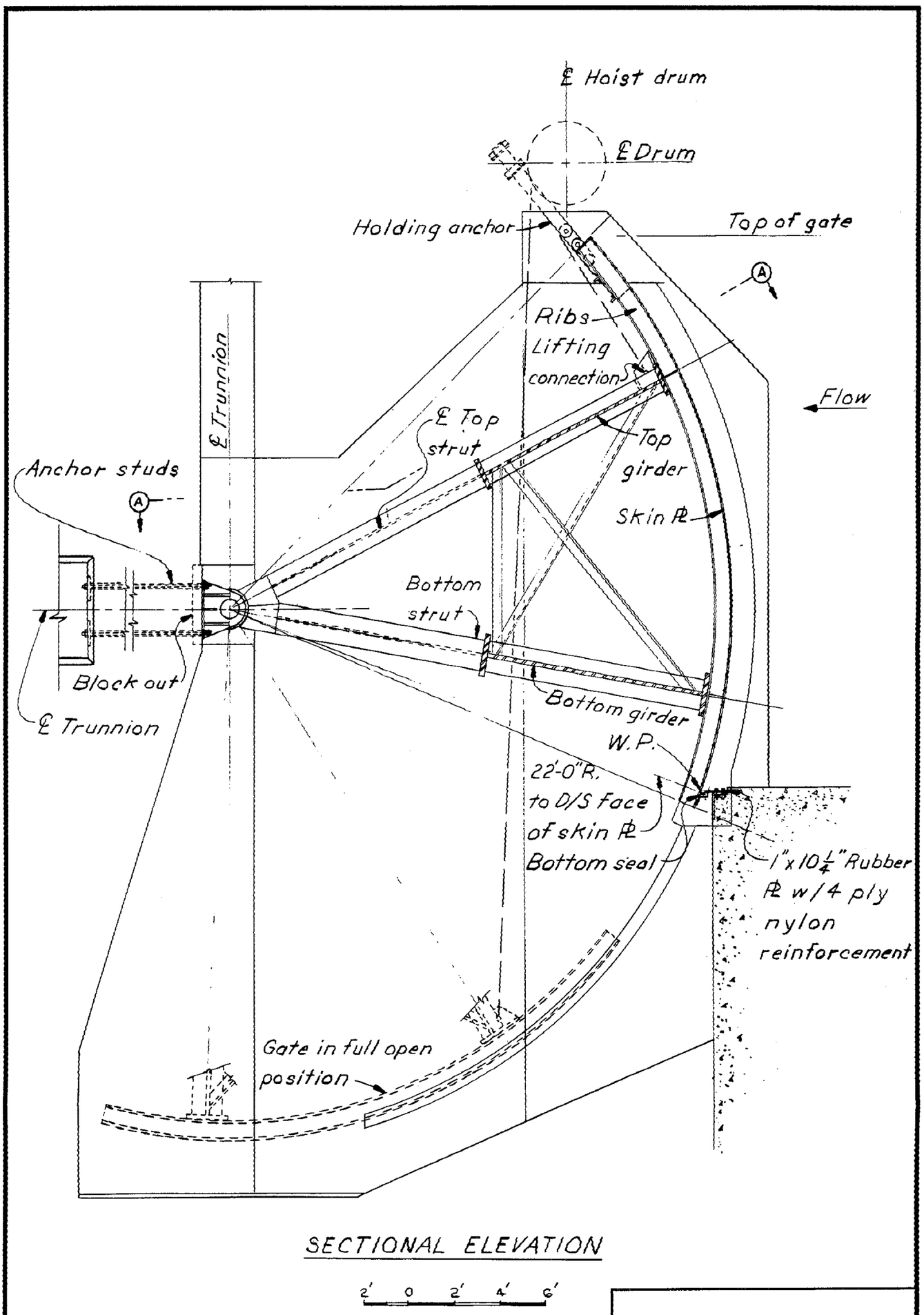

SECTIONAL ELEVATION

2' 0 2' 4' 6'

TAINTER GATES
SUBMERGIBLE TYPE
TYPICAL END FRAME
AND CROSS SECTION

PLATE B-45

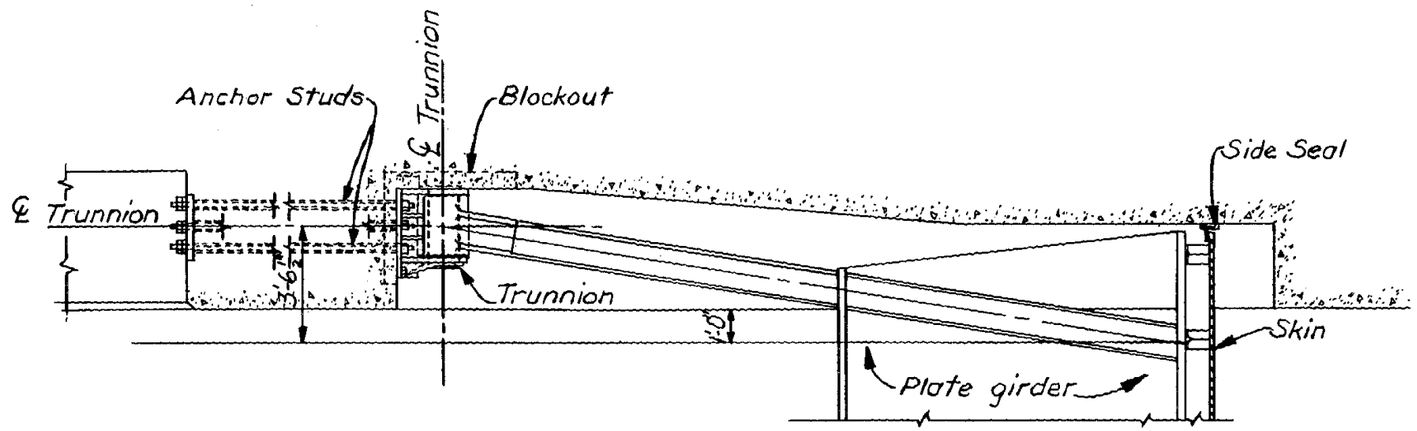

SECTIONAL PLAN A

TAINTER GATES
SUBMERGIBLE TYPE
TYPICAL END FRAME

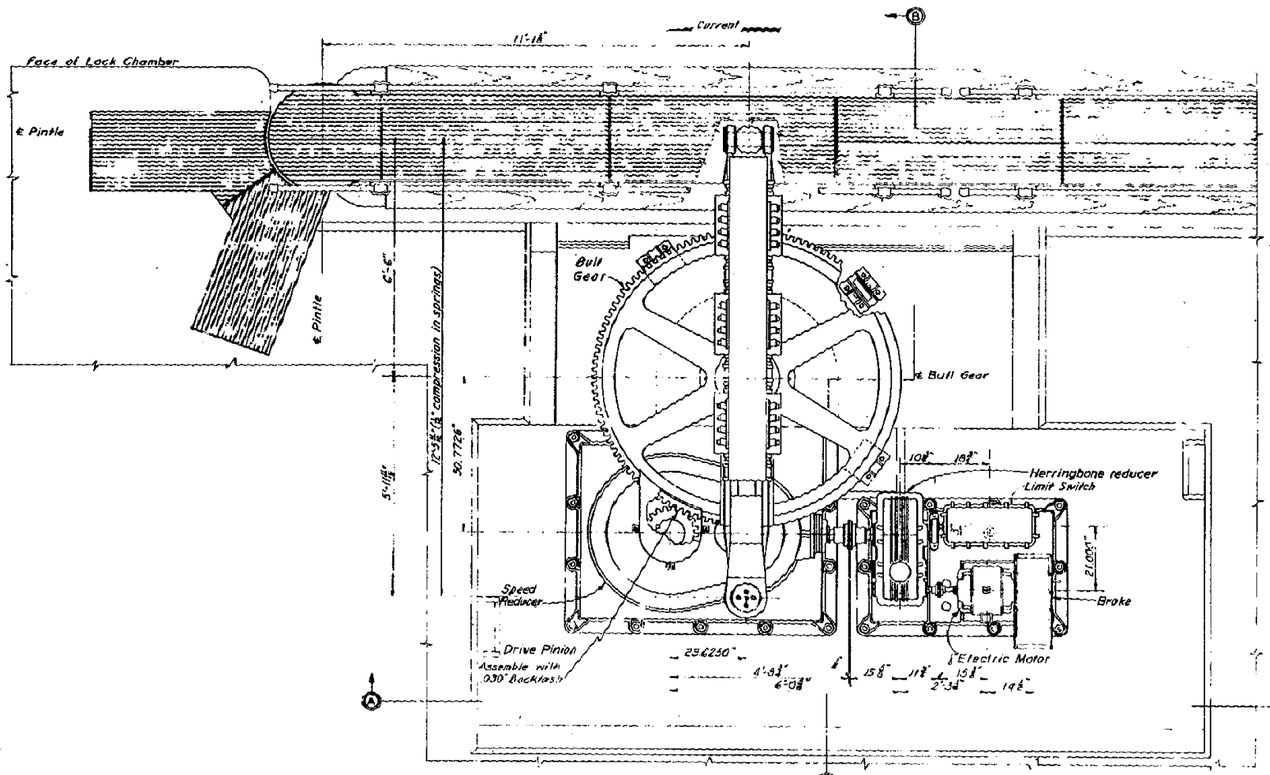

PLAN
LAND WALL AS SHOWN
RIVER WALL OPPOSITE HAND

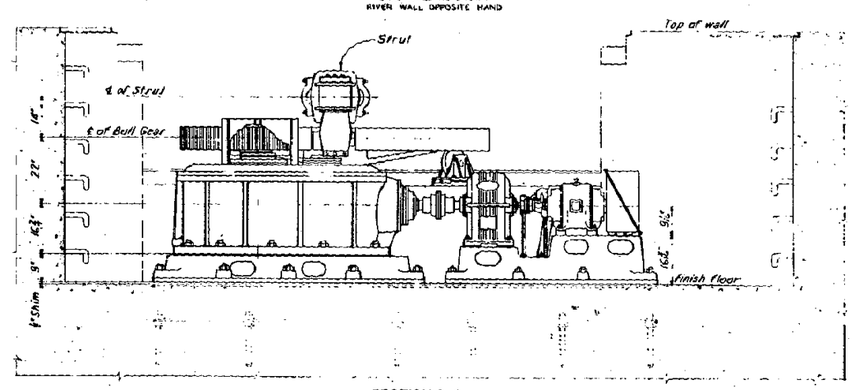

SECTION A-A

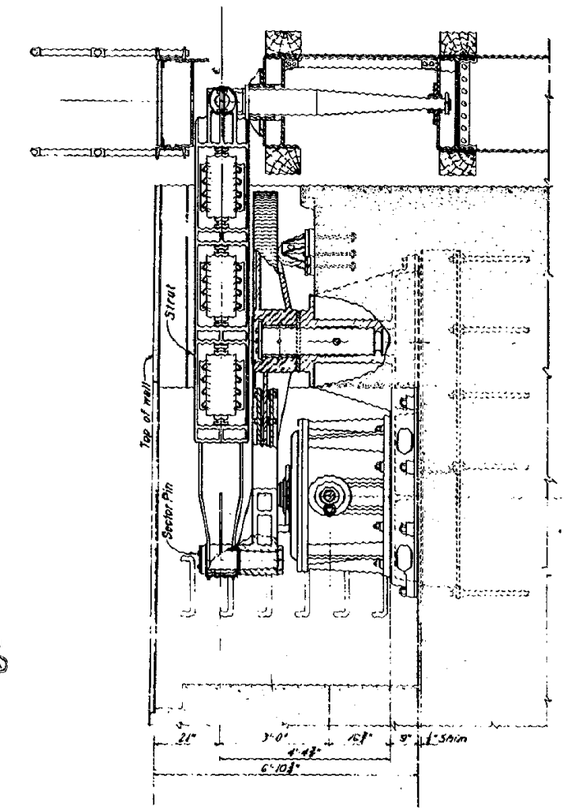

SECTION B-B

DIMENSIONS SHOWN ARE FOR CLARIFICATION AND MAY VARY WHERE NECESSARY

GATE MACHINERY
MITER GATE
PANAMA TYPE
MACHINE ASSEMBLY

PLATE B-47

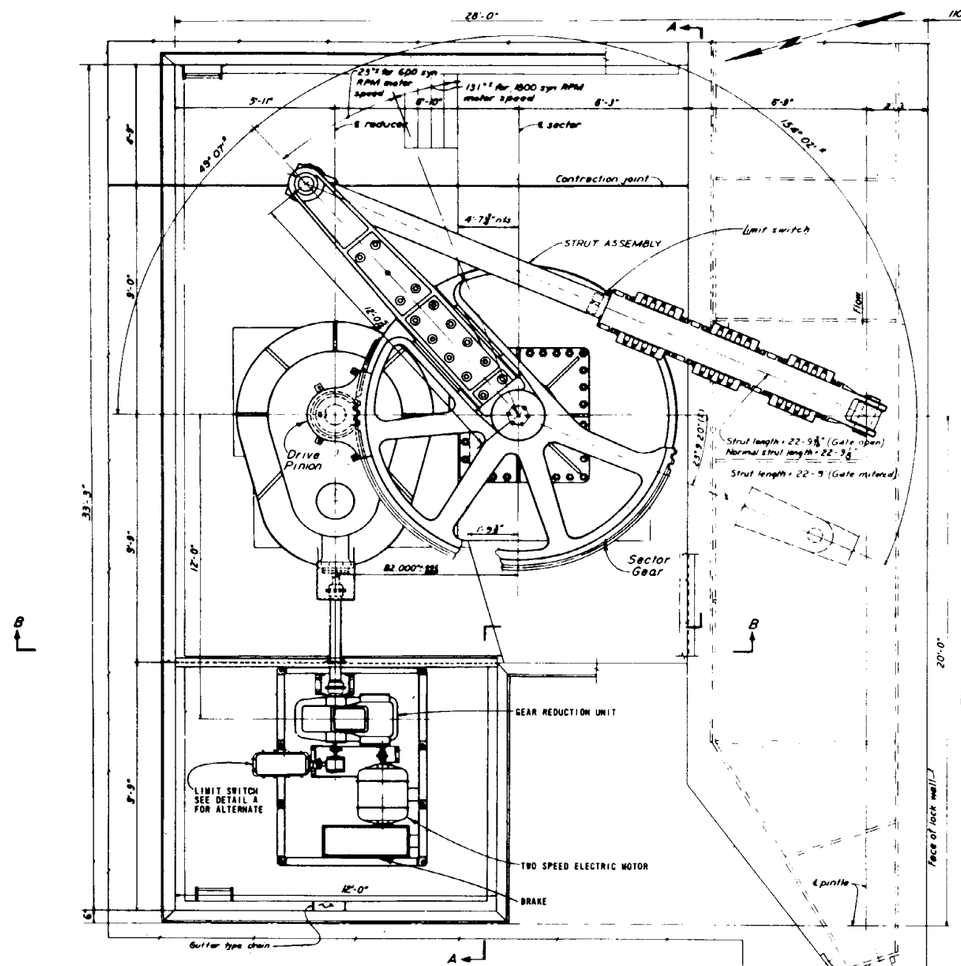

PLAN
LAND WALL AS SHOWN - RIVER WALL OPP HAND EXCEPT AS NOTED

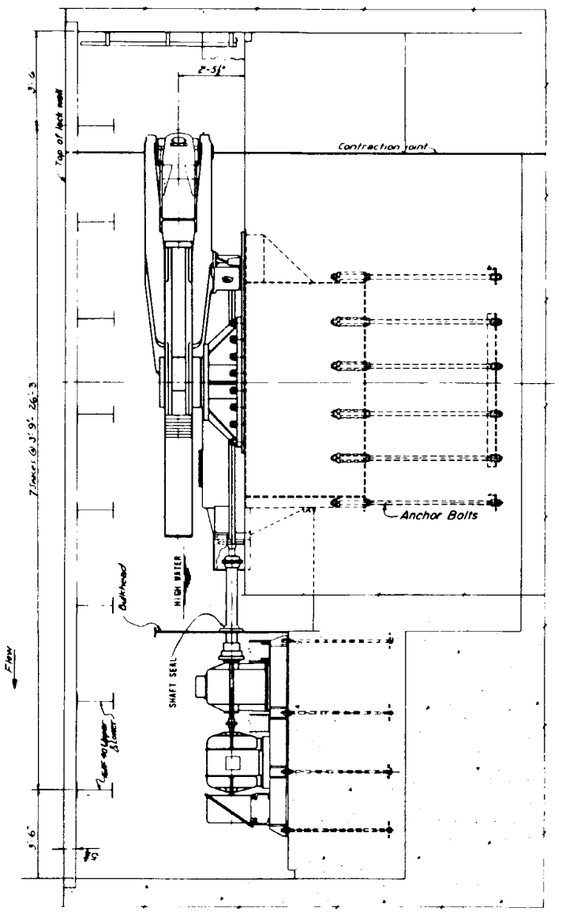

SECTION A-A

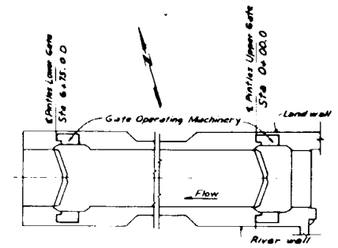

KEY PLAN
Scale 1" = 100'

DIMENSIONS SHOWN ARE FOR CLARIFICATION AND MAY VARY WHERE NECESSARY

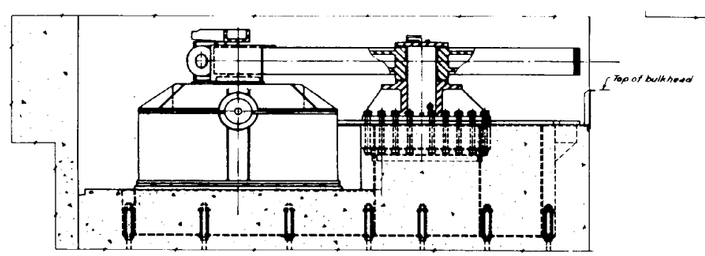

SECTION B-B
COUPLING GUARD NOT SHOWN

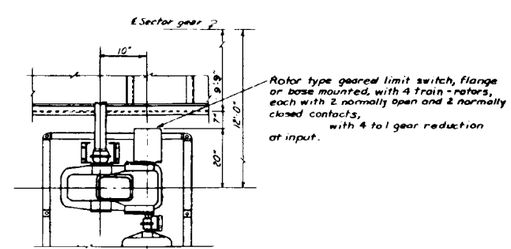

DETAIL A
ALTERNATE LIMIT SWITCH ARRG'T

GATE MACHINERY
MITER GATE
MODIFIED OHIO TYPE
MACHINE ASSEMBLY

PLATE B-48

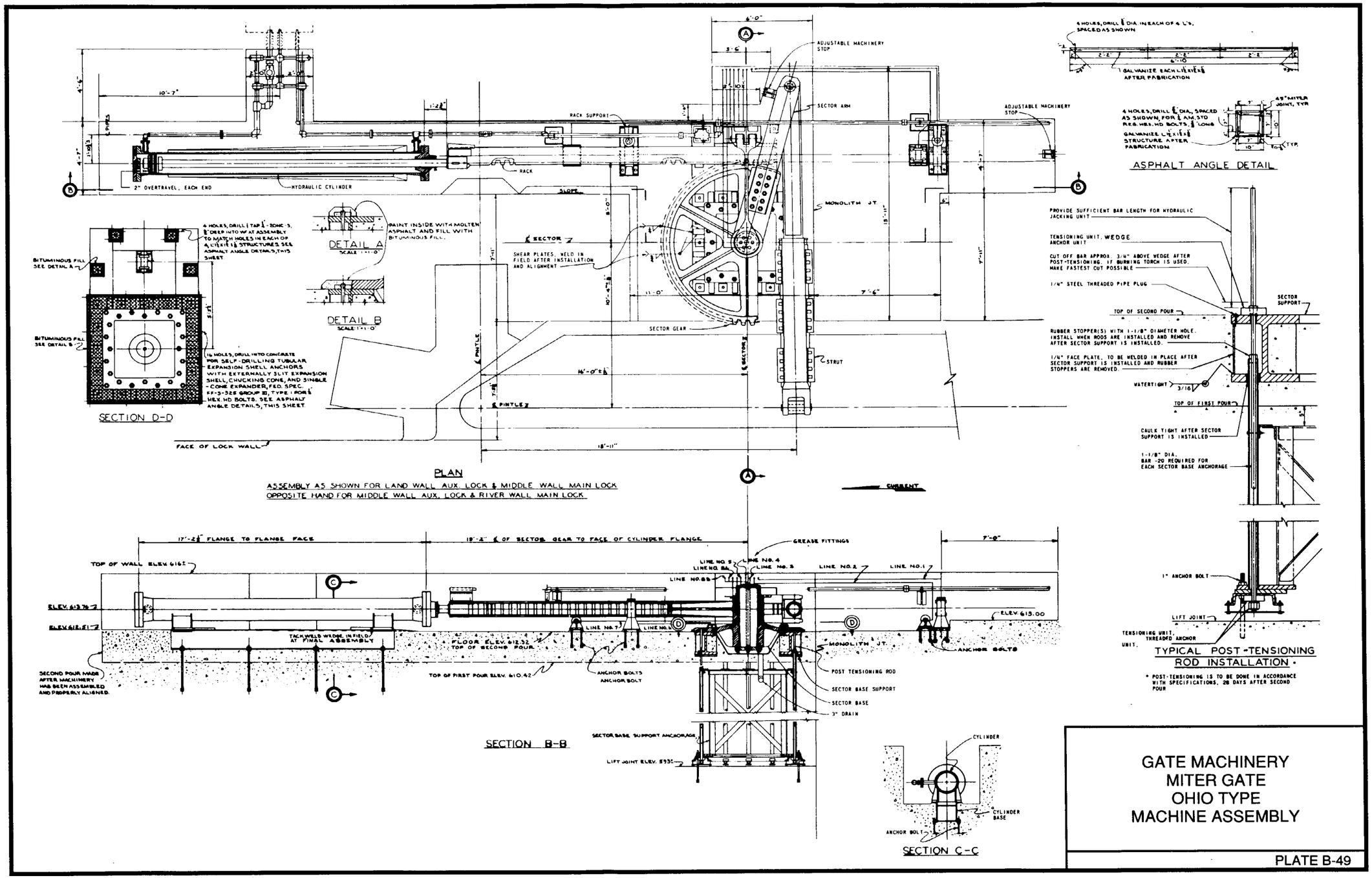

GATE MACHINERY
MITER GATE
OHIO TYPE
MACHINE ASSEMBLY

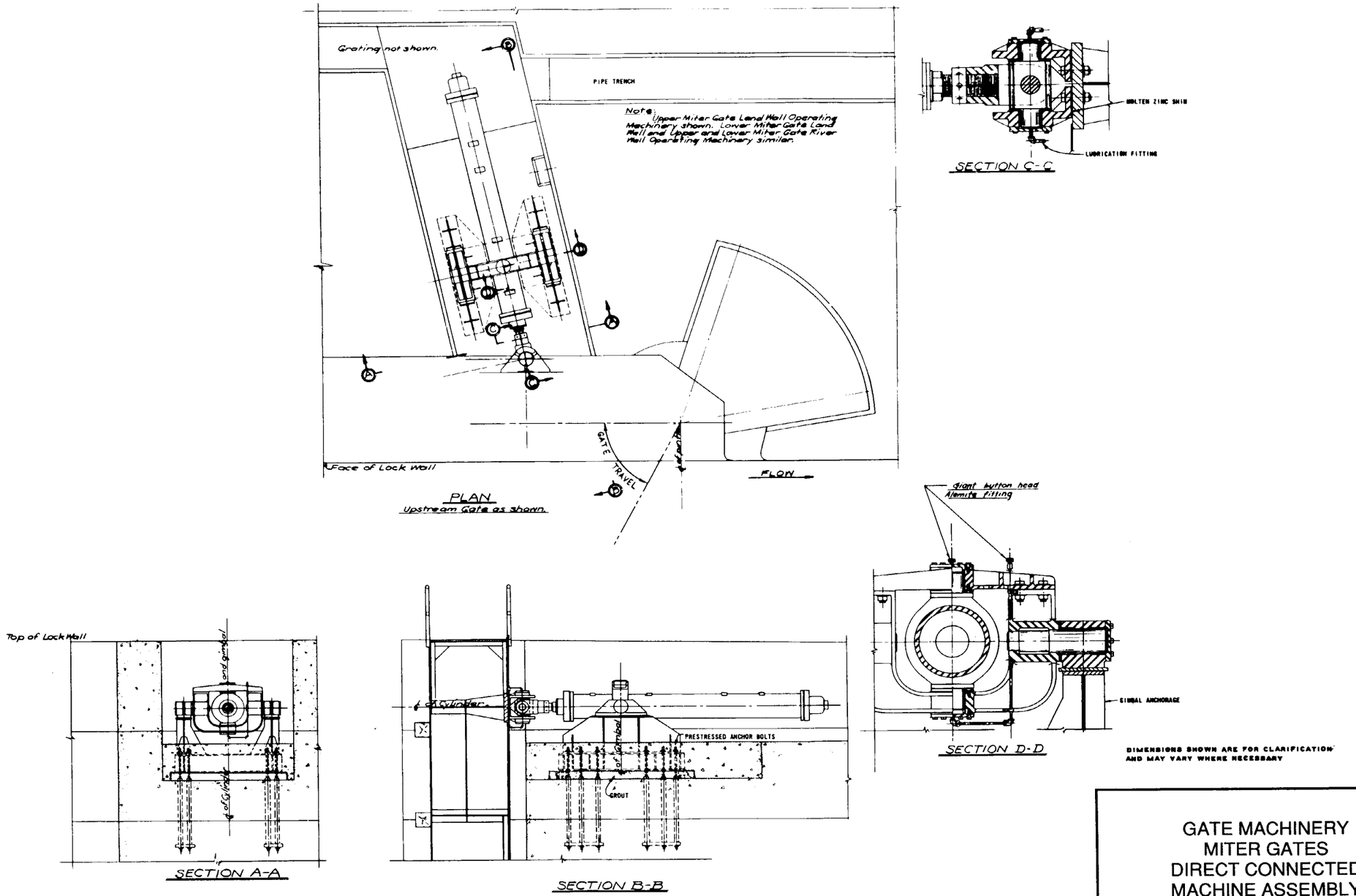

GATE MACHINERY
MITER GATES
DIRECT CONNECTED
MACHINE ASSEMBLY

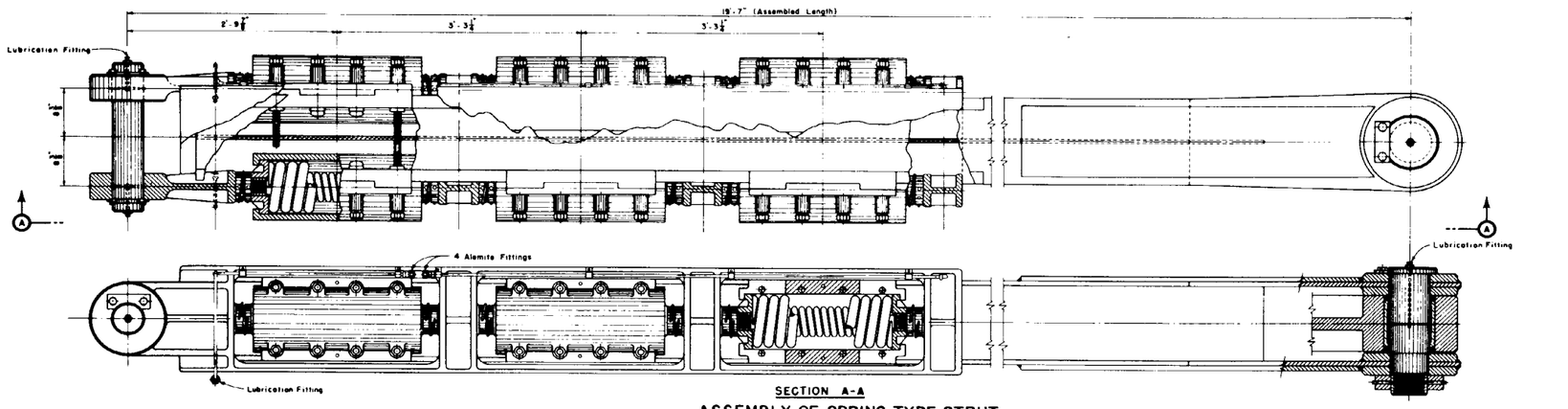

SECTION A-A

ASSEMBLY OF SPRING-TYPE STRUT

STRUT END DETAIL MAY VARY DEPENDING ON TYPE OF SECTOR ARMS USED

DIMENSIONS SHOWN ARE FOR CLARIFICATION AND MAY VARY WHERE NECESSARY

GATE MACHINERY
MITER GATE
SPRING-TYPE
GATE STRUT

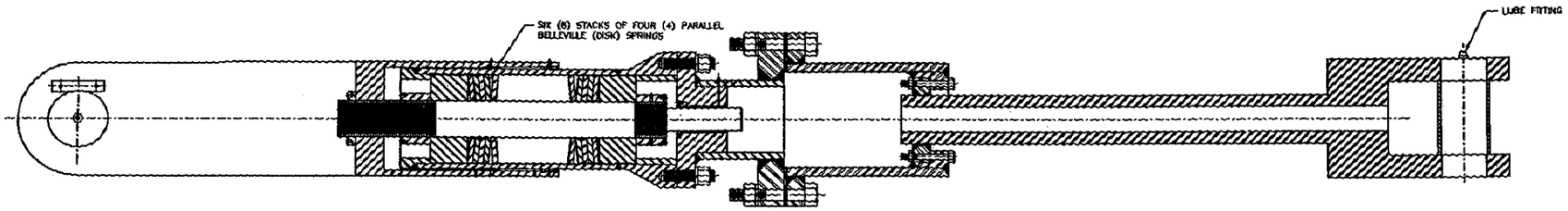

SECTIONAL PLAN

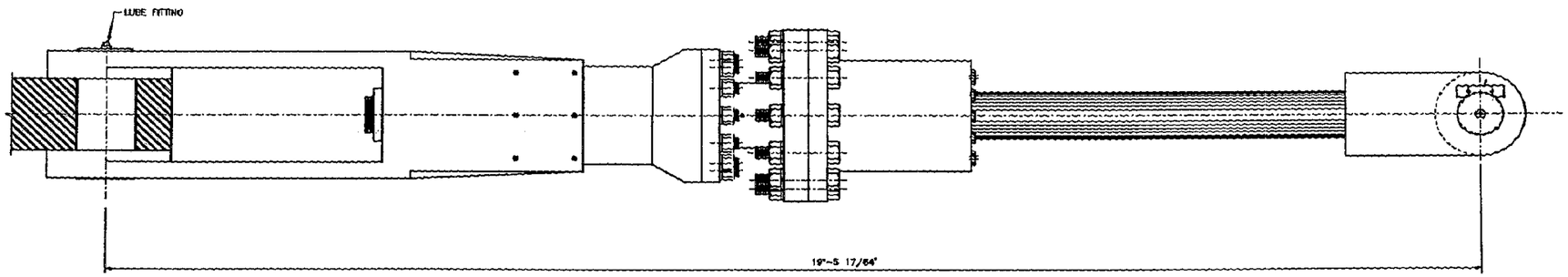

ELEVATION

MITER GATE STRUT ASSEMBLY

SCALE: 1/2" = 1'-0"

GATE MACHINERY
MITER GATE
BELLEVILLE (DISK)
SPRING-TYPE GATE STRUT
STRUT ASSEMBLY

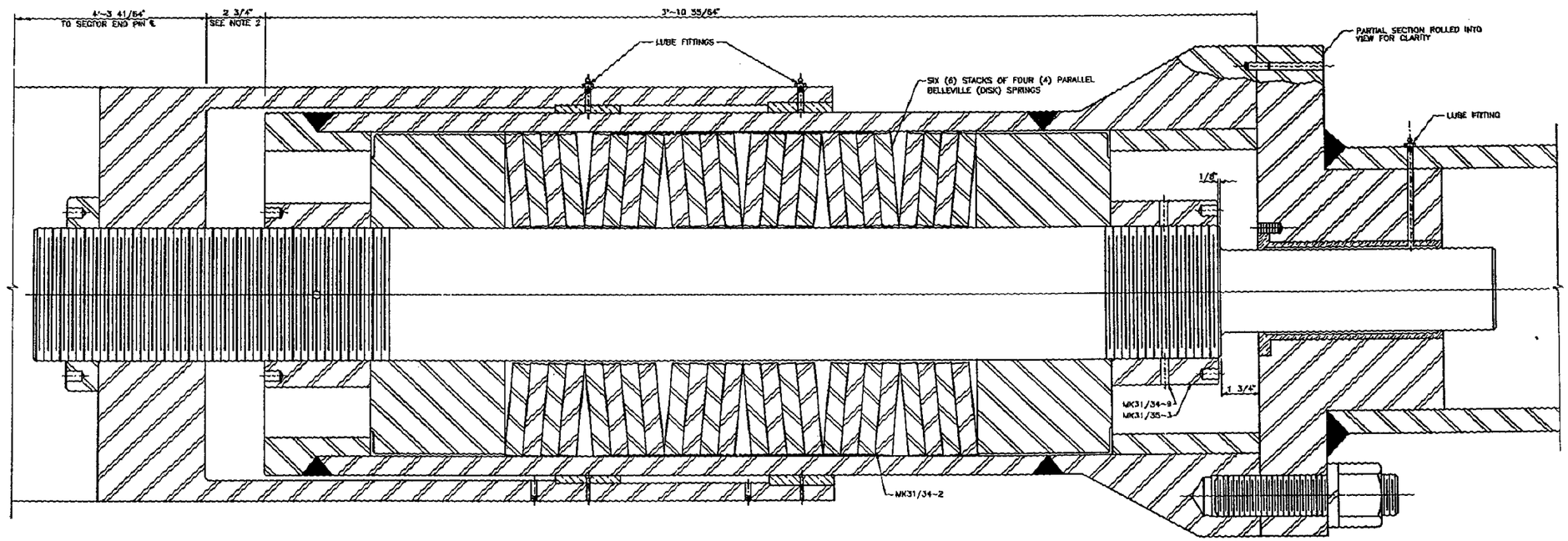

NOTE: THIS ASSEMBLY IS SHOWN WITH 21/32" SPRING PRESET APPLIED

SECTIONAL ELEVATION

STRUT SPRING ASSEMBLY

SCALE: 3/8"=1'-0"

NOTES:

1. SIX STACKS OF 4 PARALLEL DISK SPRINGS REQUIRED PER STRUT ASSEMBLY.
2. DIMENSION SHOWN IS DESIGN VALUE. ADJUST AT INSTALLATION AS REQUIRED BETWEEN A MINIMUM OF 1 3/4" AND 3 3/4" MAXIMUM.
3. TRADE NAMES AND CATALOG NUMBERS SHOWN INDICATE EXAMPLES OF STANDARD ITEMS. OTHER MANUFACTURERS-PRODUCTS MAY BE SUBSTITUTED IF APPROVED EQUAL.

GATE MACHINERY
MITER GATE
BELLEVILLE (DISK) SPRING-
TYPE GATE STRUT
SPRING ASSEMBLY

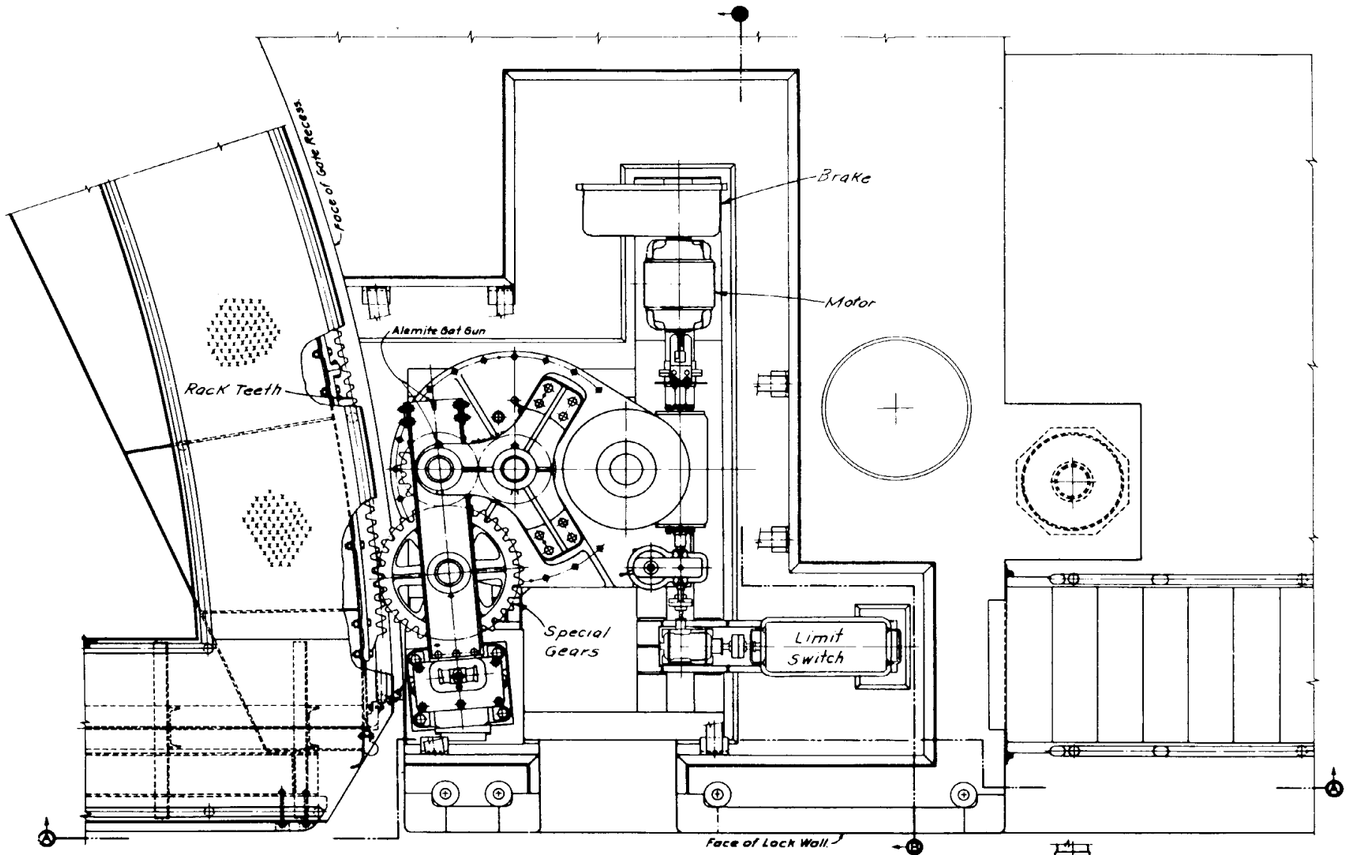

PLAN

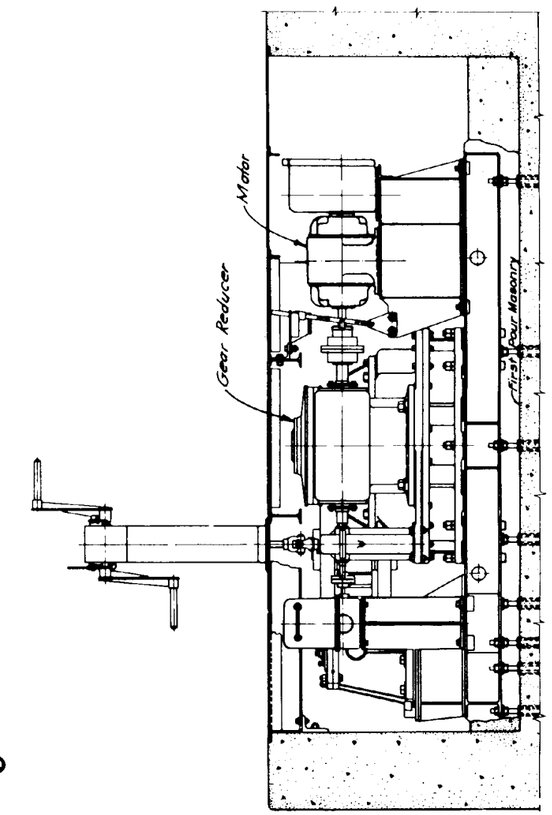

SECTION B-B

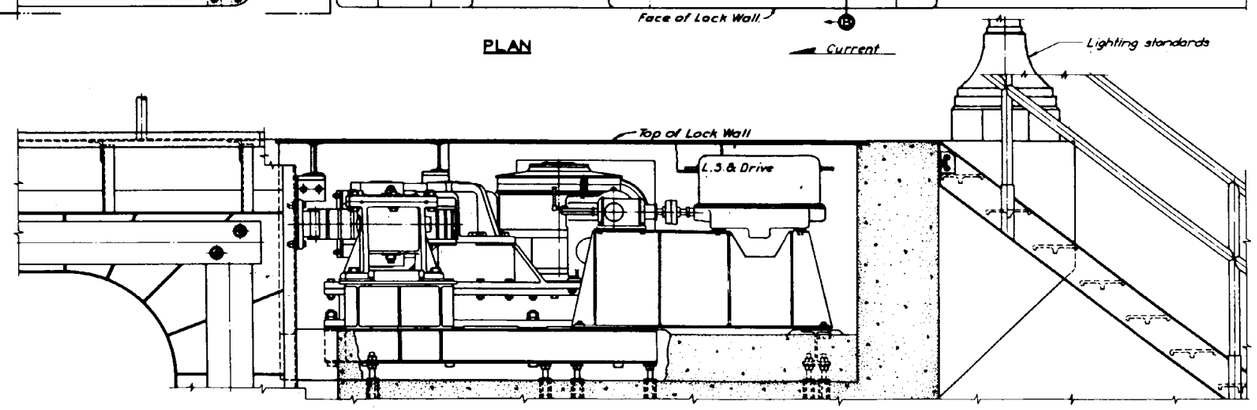

SECTION A-A

NOTES

MACHINERY SHOWN IS FOR RIGHT WALL, OPPOSITE HAND OF SHOWN FOR LEFT WALL

DIMENSION SHOWN ARE FOR CLARIFICATION AND MAY VARY WHERE NECESSARY

GATE MACHINERY
SECTOR GATE
GEAR-TYPE
DRIVE MACHINE

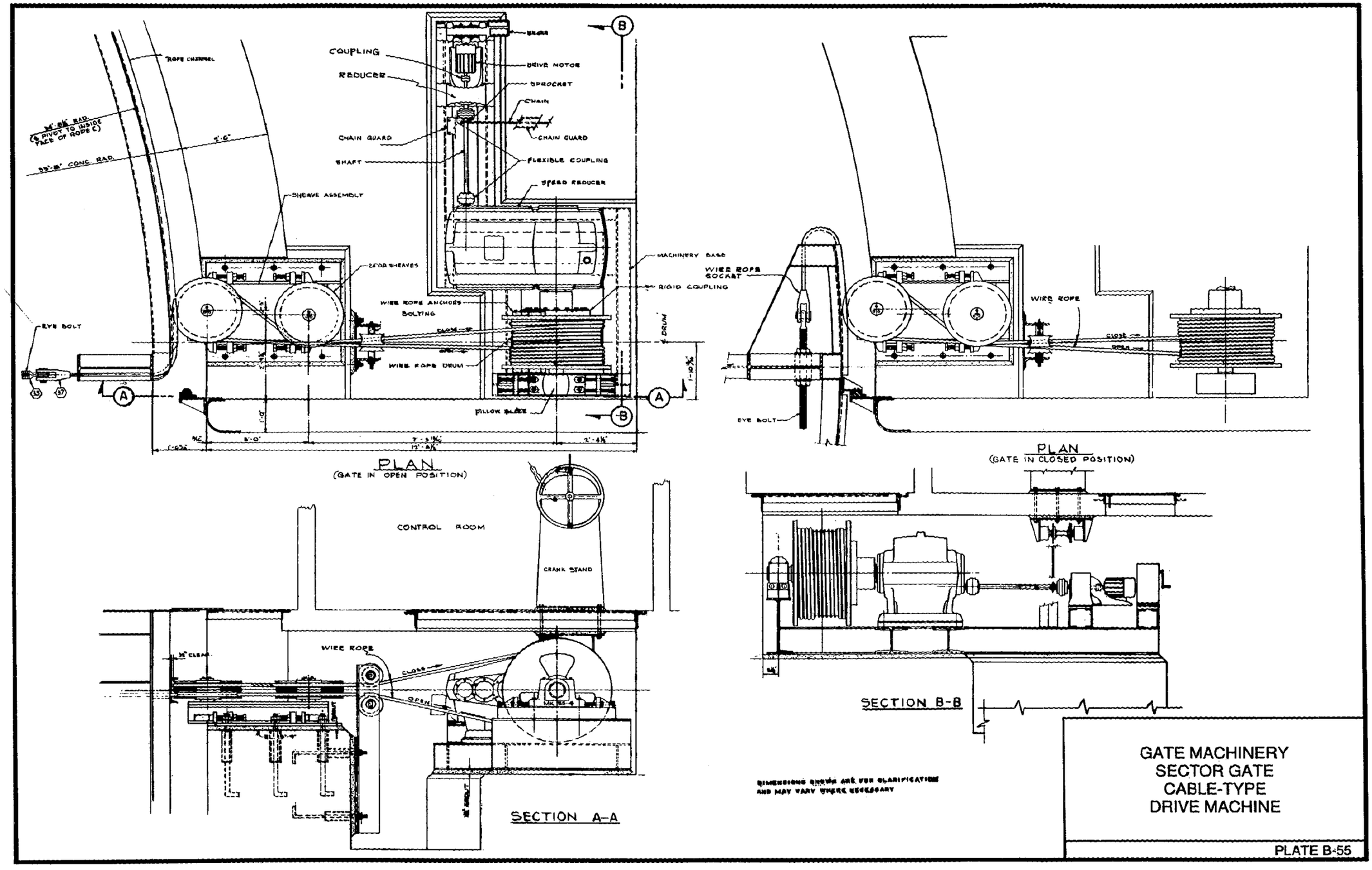

GATE MACHINERY
SECTOR GATE
CABLE-TYPE
DRIVE MACHINE

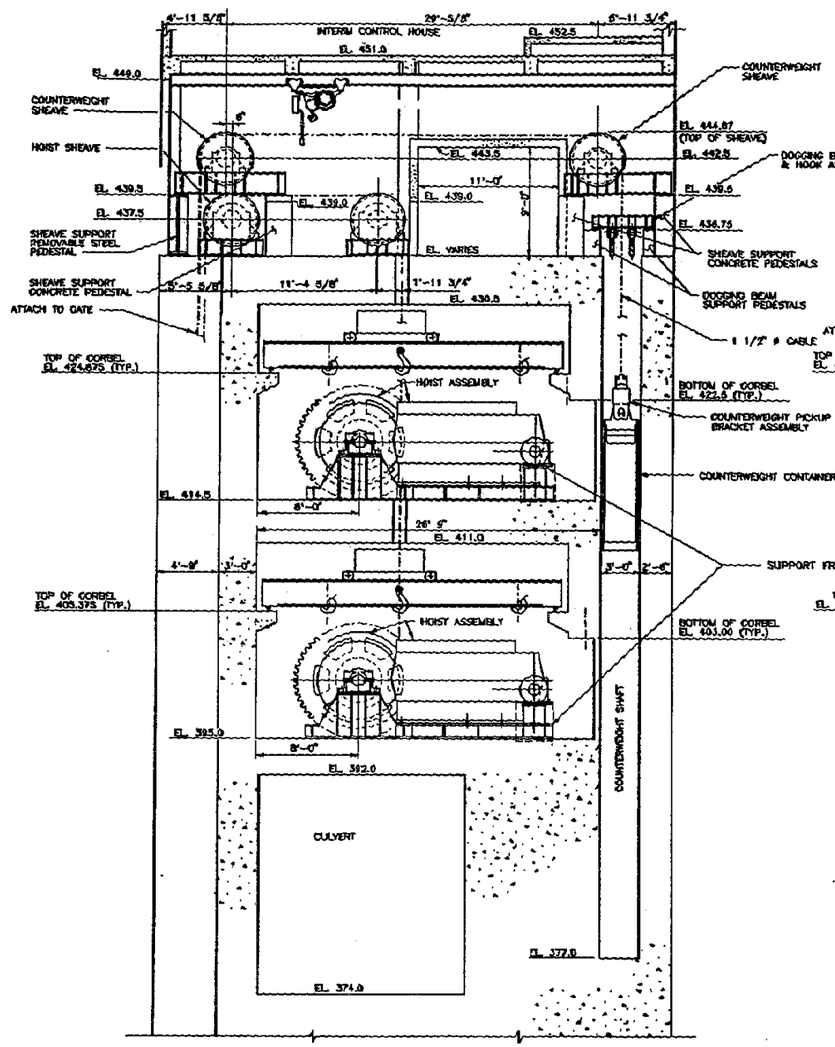

ELEVATION (TYP.)

SCALE: 1/4"=1'-0"

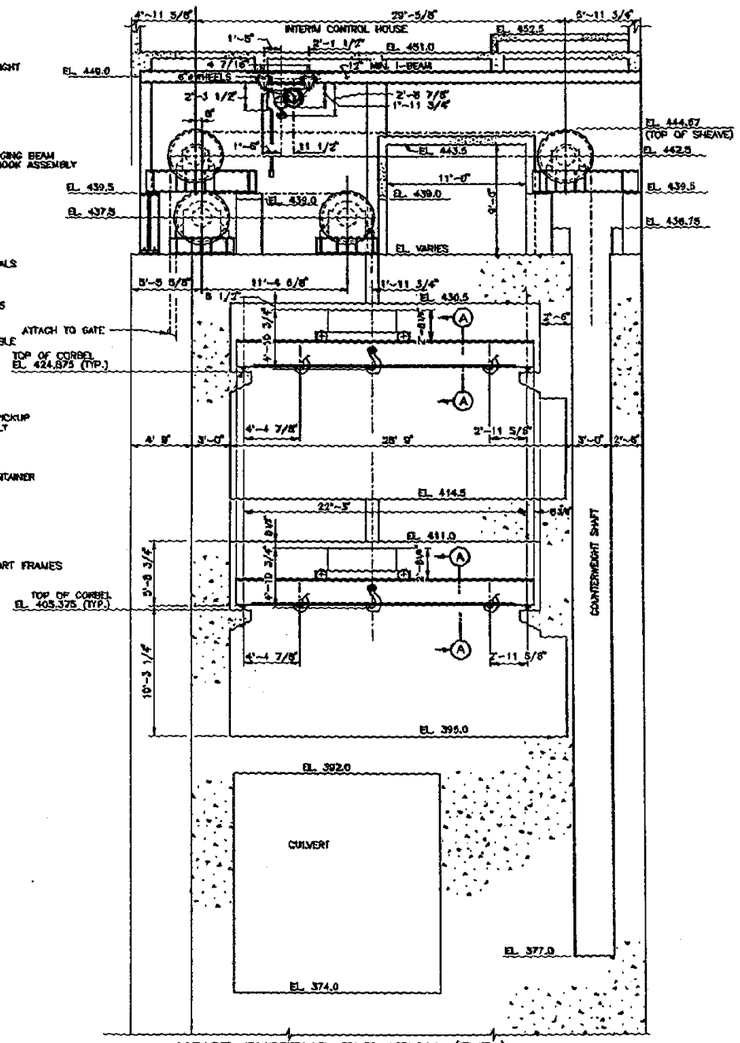

HOIST SYSTEMS ELEVATION (TYP.)

SCALE: 1/4"=1'-0"

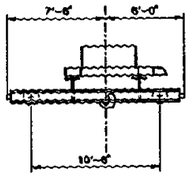

SECTION A-A

SCALE: 1"=1'-0"

GATE MACHINERY
MULTILEAF
VERTICAL-LIFT GATES
ELEVATION-HOIST
MECHANISM

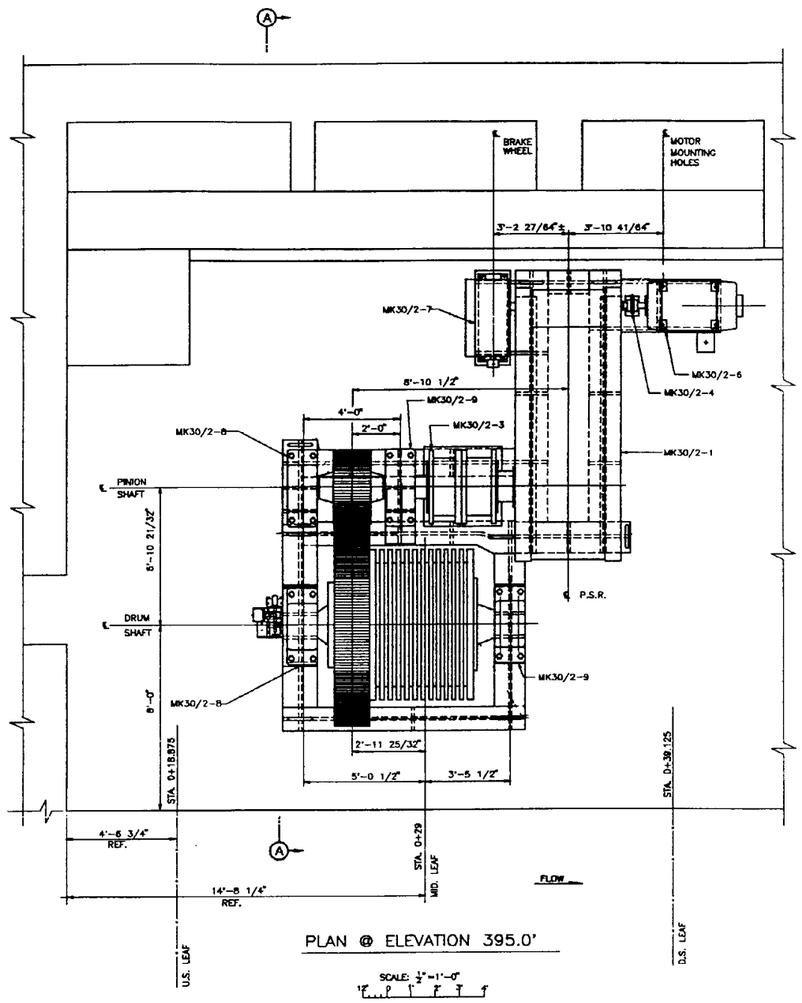

PLAN @ ELEVATION 395.0'

SCALE: 1/2"=1'-0"

LIST OF PARTS NOT DETAILED			
MARK NO.	NO. REQ'D.	DESCRIPTION	MATERIAL
MK30/2-1	3	PARALLEL SHAFT REDUCER-SIMILAR AND EQUAL TO "PHILADELPHIA GEAR CORP." UNIT SIZE 215HP4, FIG.7, AS MODIFIED HEREIN, WITH EXTENDED SHAFT TO MK30/2-7, AS REQUIRED.	COMM. GRADE
MK30/2-2	3	PARALLEL SHAFT REDUCER-SIMILAR AND EQUAL TO "PHILADELPHIA GEAR CORP." UNIT SIZE 215HP4, FIG.8 AS MODIFIED HEREIN, WITH EXTENDED SHAFT TO MK30/2-7, AS REQUIRED.	COMM. GRADE
MK30/2-3	6	FLEXIBLE COUPLING-SIMILAR AND AND EQUAL TO "FALK" TYPE G20, SERIES 2150G.	COMM. GRADE
MK30/2-4	6	FLEXIBLE COUPLING-SIMILAR AND AND EQUAL TO "FALK" TYPE G52, SERIES 1025G.	COMM. GRADE
MK30/2-5	2	ELECTRIC MOTOR-75HP, 400-1200 RPM ADJUSTABLE, 500 VOLT D.C. -SIMILAR AND EQUAL TO "NORTHWESTERN ELECTRIC" FRAME NO. 508AT.	COMM. GRADE
MK30/2-6	4	ELECTRIC MOTOR-40HP, 400-1200 RPM ADJUSTABLE, 500 VOLT D.C. -SIMILAR AND EQUAL TO "NORTHWESTERN ELECTRIC" FRAME NO. 508AT.	COMM. GRADE
MK30/2-7	6	HOLDING BRAKE, 500-1000 FT-LB., 16" ø WHEEL-SIMILAR AND EQUAL TO "EATON-CUTLER HAMMER" TYPE GHS05, SIZE 18.	COMM. GRADE
MK30/2-8	12	PILLOW BLOCK-SIMILAR AND EQUAL TO "TORRINGTON" SDAFS24160, FIXED TYPE, WITH LOCKNUT NO60 AND LOCKPLATE P60.	COMM. GRADE
MK30/2-9	12	PILLOW BLOCK-SIMILAR AND EQUAL TO "TORRINGTON" SDAFS24160, FLOAT TYPE, WITH LOCKNUT NO60 AND LOCKPLATE P60.	COMM. GRADE
MK30/2-10	22	TUBING-RECTANGULAR 2 X 3 X 0.12" X 1'-7" LONG.	ASTM A511, GR. MT304
MK30/2-11	4	BAR 1/4 x 4 x 4'-0"	ASTM A666, TYPE 304
MK30/2-12	4	L-5 x 3 1/2 x 1/2 x 4'-4 1/2".	ASTM A36
MK30/2-13	44	HEX. HD. CAPSCREW- 1/4"-13UNC-2A x 5" LONG WITH NUT AND LOCKWASHER.	ASTM A193, GR. B8 & ASTM A194, GR. 8

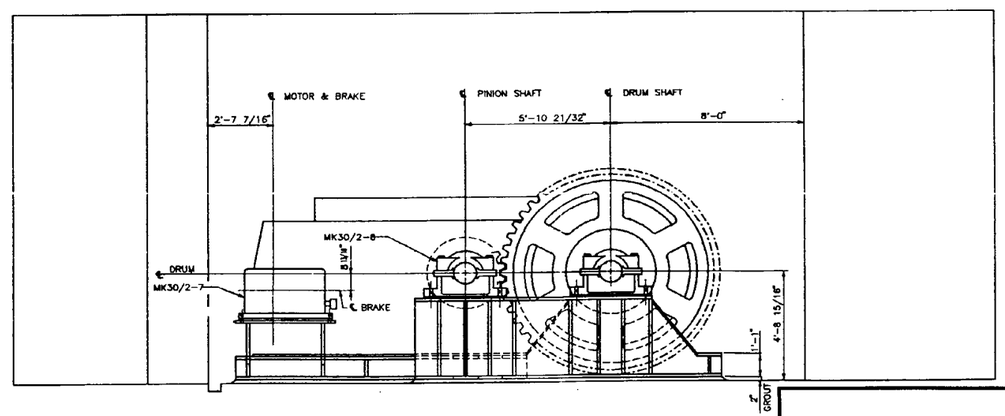

SECTION A-A

SCALE: 1/2"=1'-0"

GATE MACHINERY
MULTILEAF VERTICAL
LIFT GATES
GENERAL ARRANGEMENT-
HOIST MECHANISM

PLATE B-57

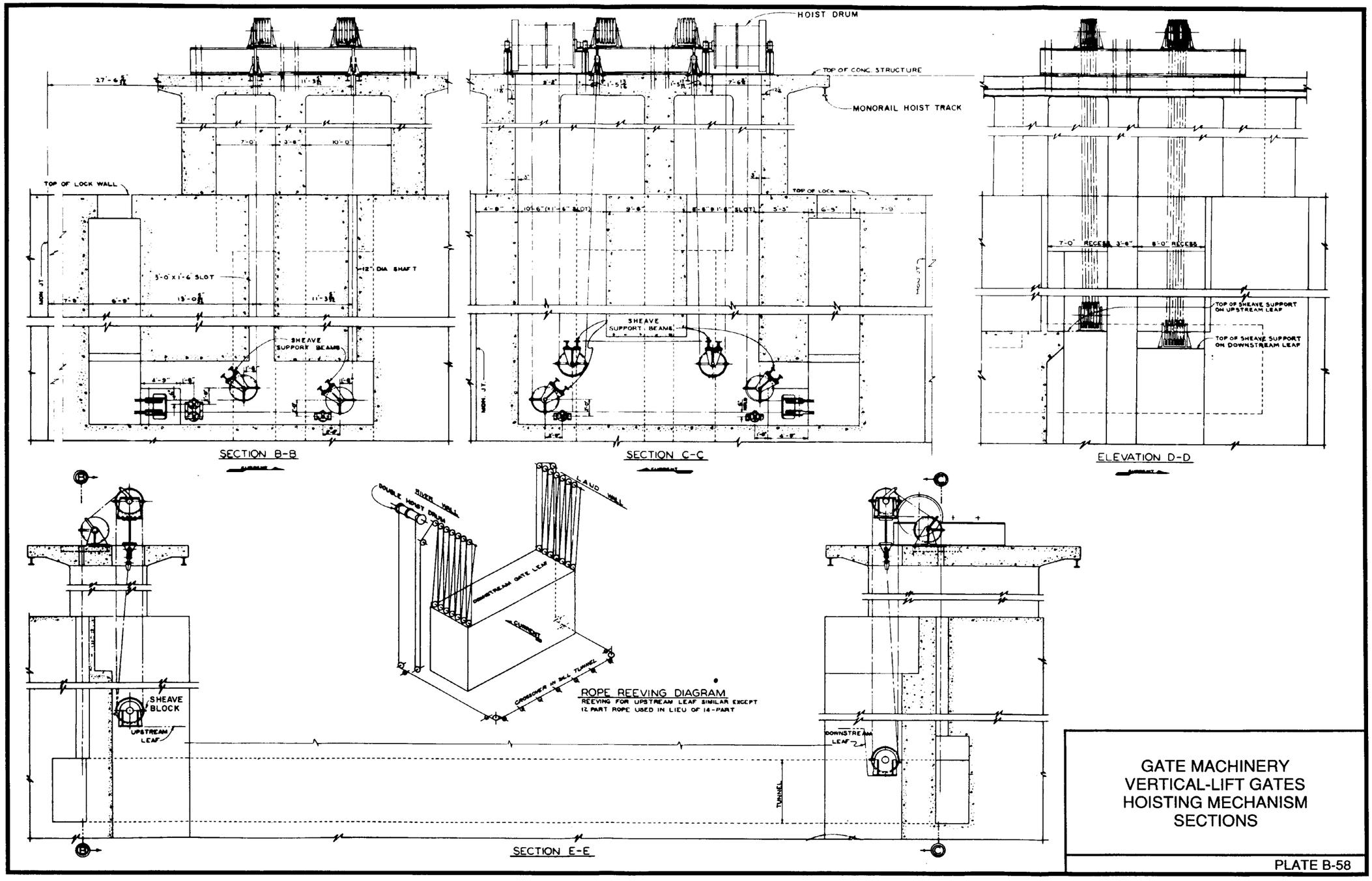

GATE MACHINERY
VERTICAL-LIFT GATES
HOISTING MECHANISM
SECTIONS

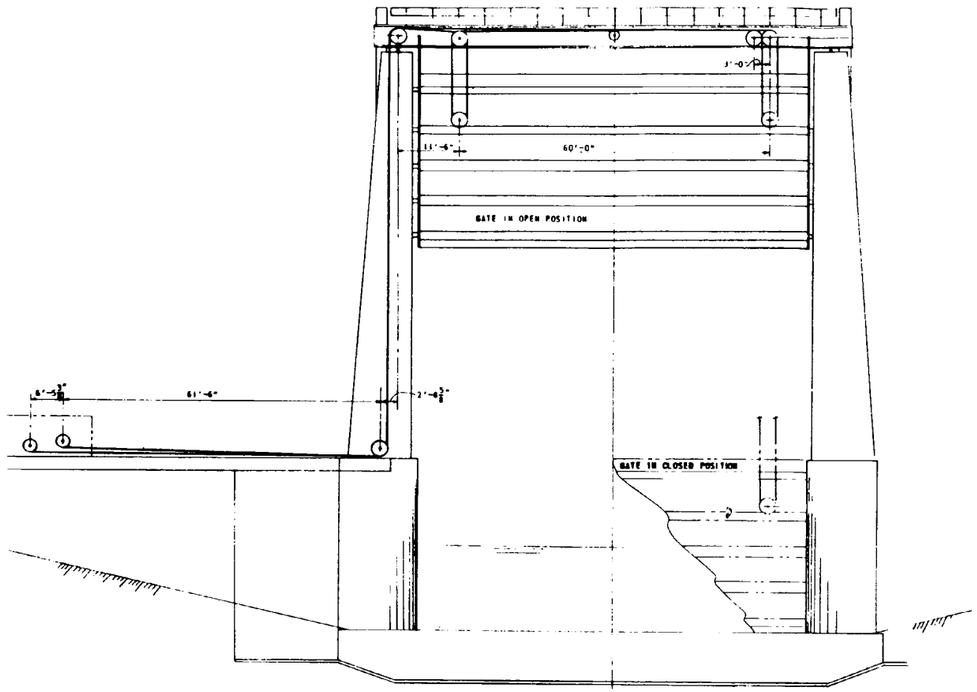

ELEVATION

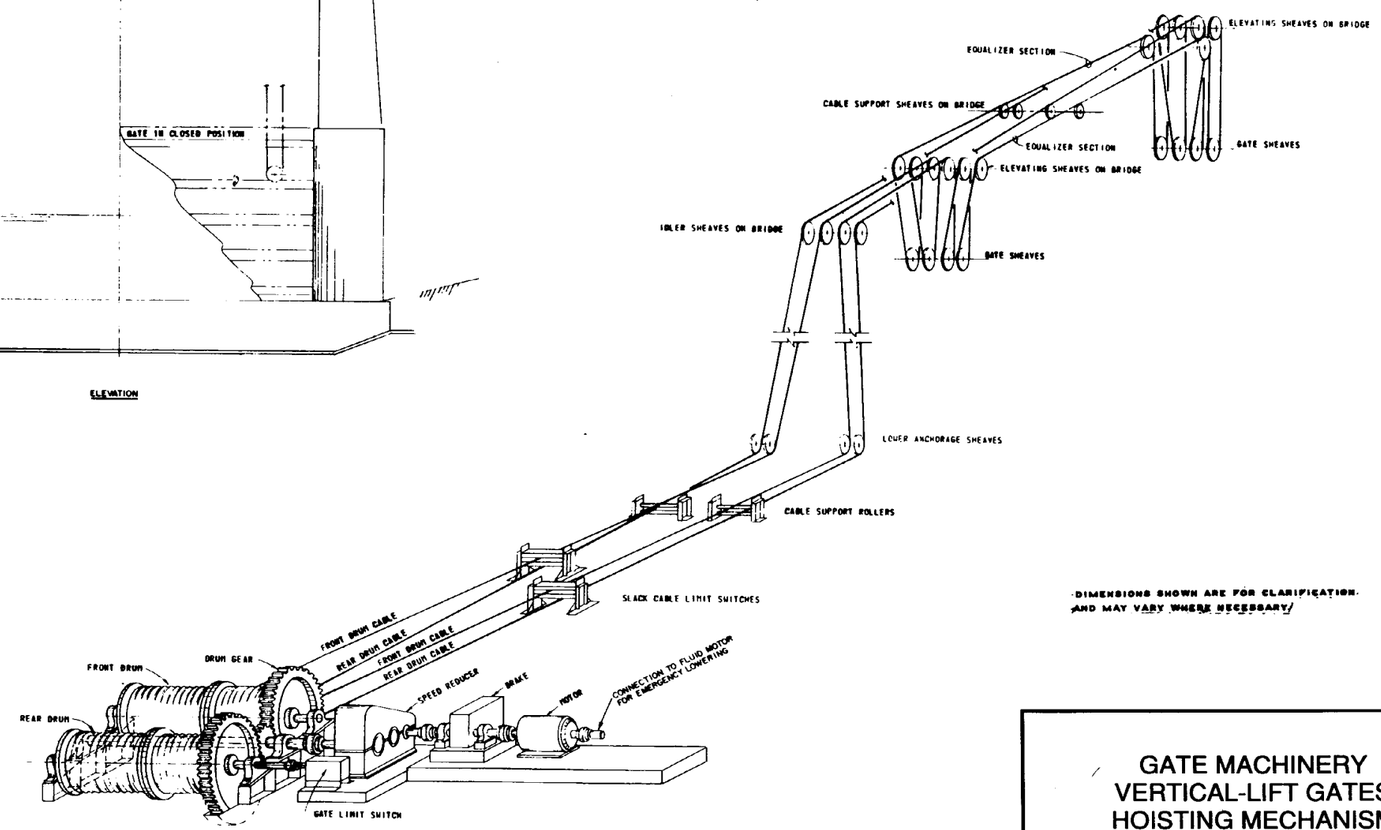

HOIST DRIVE MACHINERY AND REEVING DIAGRAM
NO SCALE

DIMENSIONS SHOWN ARE FOR CLARIFICATION AND MAY VARY WHERE NECESSARY

GATE MACHINERY
VERTICAL-LIFT GATES
HOISTING MECHANISM
ELEVATION

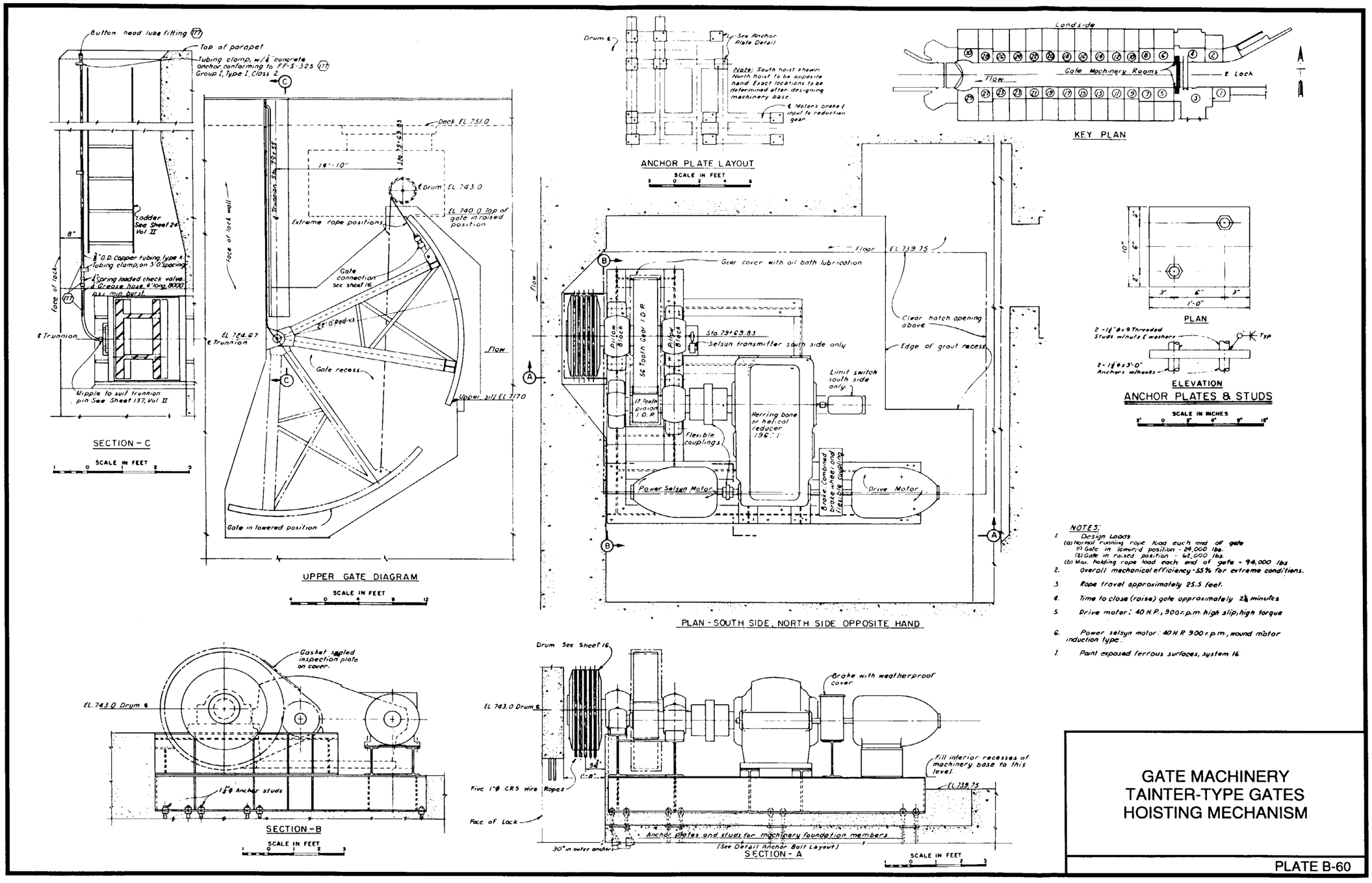

NOTES:

1. Design Loads
   (a) Normal running rope load each end of gate
      (1) Gate in lowered position - 24,000 lbs.
      (2) Gate in raised position - 62,000 lbs.
   (b) Max. holding rope load each end of gate - 94,000 lbs.
2. Overall mechanical efficiency - 55% for extreme conditions.
3. Rope travel approximately 25.5 feet.
4. Time to close (raise) gate approximately 2½ minutes
5. Drive motor: 40 H.P., 900 r.p.m. high slip, high torque
6. Power selsyn motor: 40 H.P. 900 r.p.m., wound motor induction type.
7. Paint exposed ferrous surfaces, system 16.

GATE MACHINERY
TAINTER-TYPE GATES
HOISTING MECHANISM

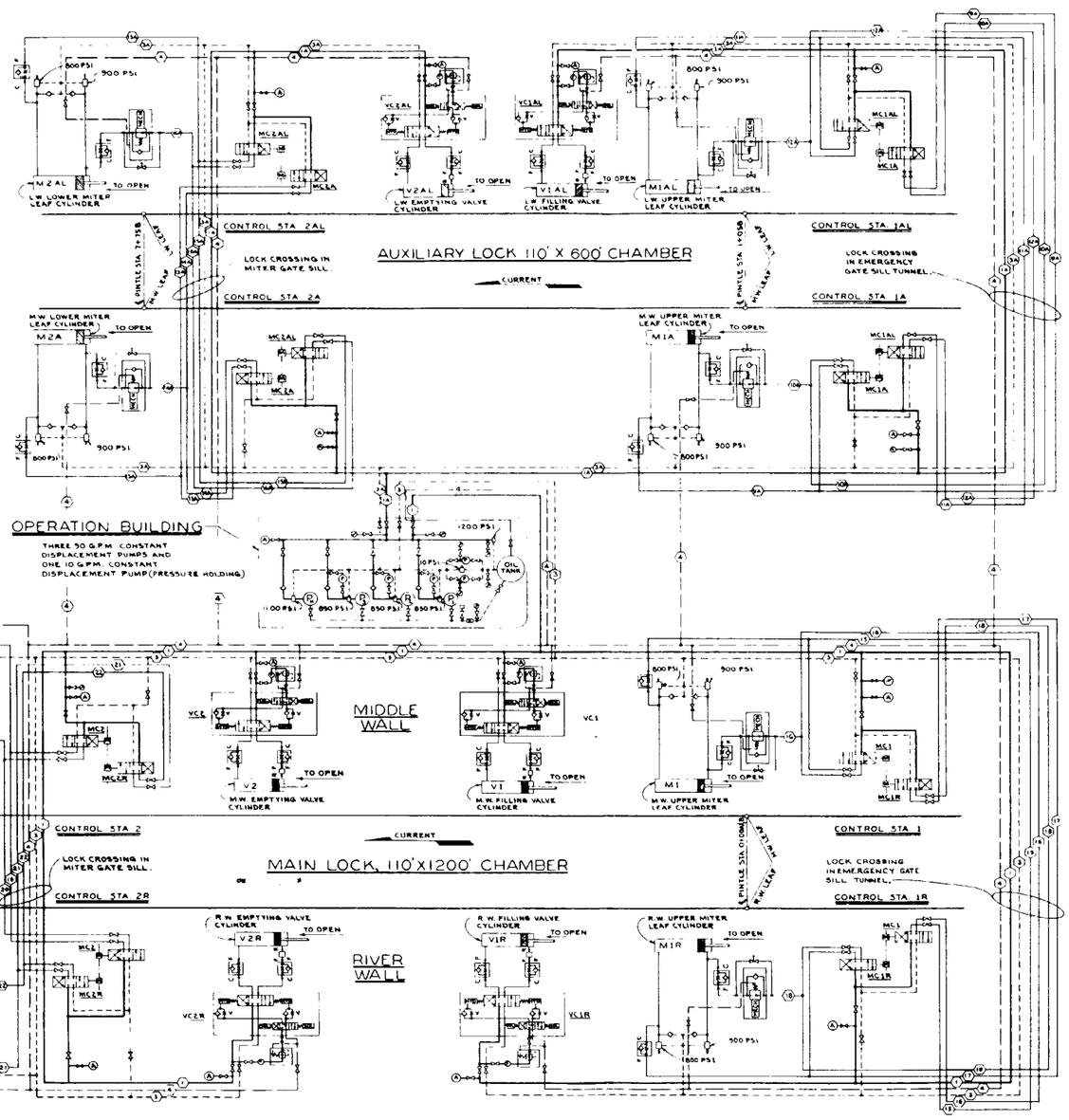

PIPE LEGEND, 600' LOCK

SYMBOL	DESCRIPTION
(A)	MAIN PRESSURE
(C)	RETURN
(D)	DRAIN
(E)	M1A HD. END
(F)	M1A ROD END
(G)	M1AL HD. END
(H)	M1AL ROD END
(J)	M2A HD. END
(K)	M2A ROD END
(L)	M2AL HD. END
(M)	M2AL ROD END

PIPE LEGEND, 1200' LOCK

SYMBOL	DESCRIPTION
(A)	MAIN PRESSURE
(B)	RETURN
(C)	DRAIN
(D)	M1 HD. END
(E)	M1 ROD END
(F)	M1R HD. END
(G)	M1R ROD END
(H)	M2 HD. END
(J)	M2 ROD END
(K)	M2R HD. END
(L)	M2R ROD END

SYMBOL	DESCRIPTION
	MAIN LOCK 1200'
	STATIONS
1	CONTROLS FOR M.W. & R.W. FILLING & EMPTYING VALVES & UPPER MITER LEAVES
1R	CONTROLS FOR M.W. & R.W. FILLING VALVES & UPPER MITER LEAVES
2	CONTROLS FOR M.W. & R.W. FILLING & EMPTYING VALVES & LOWER MITER LEAVES
2R	CONTROLS FOR M.W. & R.W. EMPTYING VALVES & LOWER MITER LEAVES
S1	SUPPLEMENTAL CONTROLS FOR FILLING VALVES (ELECTRICAL CONTROLS ONLY)
S2	SUPPLEMENTAL CONTROLS FOR EMPTYING VALVES (" " ")
	CYLINDERS
M1	OPERATES M.W. UPPER MITER LEAF
M1R	OPERATES R.W. UPPER MITER LEAF
M2	OPERATES M.W. LOWER MITER LEAF
M2R	OPERATES R.W. LOWER MITER LEAF
V1	OPERATES M.W. FILLING VALVE
V1R	OPERATES R.W. FILLING VALVE
V2	OPERATES M.W. EMPTYING VALVE
V2R	OPERATES R.W. EMPTYING VALVE
	CONTROL VALVES
MC1	OPERATES M.W. UPPER MITER LEAF
MC1R	OPERATES R.W. UPPER MITER LEAF
MC2	OPERATES M.W. LOWER MITER LEAF
MC2R	OPERATES R.W. LOWER MITER LEAF
VC1	OPERATES M.W. FILLING VALVE (SOLENOID OPERATED)
VC1R	OPERATES R.W. FILLING VALVE (" " ")
VC2	OPERATES M.W. EMPTYING VALVE (" " ")
VC2R	OPERATES R.W. EMPTYING VALVE (" " ")

	AUXILIARY LOCK 600
	STATIONS
1A	CONTROLS FOR L.W. FILLING & EMPTYING VALVES & UPPER MITER LEAVES
1AL	CONTROLS FOR L.W. FILLING VALVE & UPPER MITER LEAVES
2A	CONTROLS FOR L.W. FILLING & EMPTYING VALVES & LOWER MITER LEAVES
2AL	CONTROLS FOR L.W. EMPTYING VALVE & LOWER MITER LEAVES
	CYLINDERS
M1A	OPERATES M.W. UPPER MITER LEAF
M1AL	OPERATES L.W. UPPER MITER LEAF
M2A	OPERATES M.W. LOWER MITER LEAF
M2AL	OPERATES L.W. LOWER MITER LEAF
V1AL	OPERATES L.W. FILLING VALVE
V2AL	OPERATES L.W. EMPTYING VALVE
	CONTROL VALVES
MC1A	OPERATES M.W. UPPER MITER LEAF
MC1AL	OPERATES L.W. UPPER MITER LEAF
MC2A	OPERATES M.W. LOWER MITER LEAF
MC2AL	OPERATES L.W. LOWER MITER LEAF
VC1AL	OPERATES L.W. FILLING VALVE (SOLENOID OPERATED)
VC2AL	OPERATES L.W. EMPTYING VALVE (" " ")

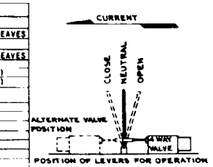

POSITION OF LEVERS FOR OPERATION OF MITER GATES.

LEGEND

- R.W. — RIVER WALL
- M.W. — MIDDLE WALL
- L.W. — LAND WALL
- MAIN PRESSURE LINE
- MAIN RETURN LINE.
- CONTROL LINE
- DRAIN LINE
- 4-WAY CONTROL VALVE, LEVER OPERATED, NO SPRING, CLOSED CENTER, NO DETENTS.
- 4-WAY VALVE, SOLENOID PILOT OPERATED, CLOSED CENTER, SPRING CENTERED, PILOT CHOKE ADJUSTMENTS, EXTERNAL PILOT PRESSURE, SUBMERSIBLE.
- FLOW CONTROL VALVE, VARIABLE ORIFICE TYPE WITH INTEGRAL CHECK. C DIRECTION OF CONTROLLED FLOW, DIRECTION OF FREE FLOW.
- PRESSURE REDUCING VALVE.
- DECELERATION VALVE, CAM AND ROLLER OPERATED, NORMALLY OPEN, WITH INTEGRAL CHECK. VALVE SHALL BE SUITABLE FOR 15 P.S.I. DRAIN LINE PRESSURE WITHOUT LEAKAGE.
- SHUT OFF VALVE
- CHECK VALVE
- RELIEF VALVE
- X COUNTERBALANCE VALVE. F FREE FLOW. R RESTRICTED FLOW
- ACCUMULATOR
- FILTER
- RELIEF VALVE, BALANCED PISTON TYPE.
- UNLOADING VALVE, REMOTE CONTROLLED, INTERNALLY DRAINED.
- SERVICE PUMPS
- HOLDING PUMP
- STRAINER
- PRESSURE GAGE WITH GLOBE OR NEEDLE VALVE.
- COMPOUND GAGE WITH GLOBE OR NEEDLE VALVE.
- 1/8" NEEDLE VALVE

NOTE:
PRESSURES SHOWN ARE FOR CLARIFICATION AND MAY VARY WHERE NECESSARY.

RELEIF VALVE ARRANGEMENT SHOWN MUST BE MODIFIED FOR HYDRAULIC CONTROL OF TEMPORAL LOADS, SEE PLATE B-62 FOR MODIFICATION.

GATE MACHINERY HYDRAULIC SYSTEM SCHEMATIC CONSTANT DISPLACEMENT PUMPS MANUALLY OPERATED

PLATE B-61

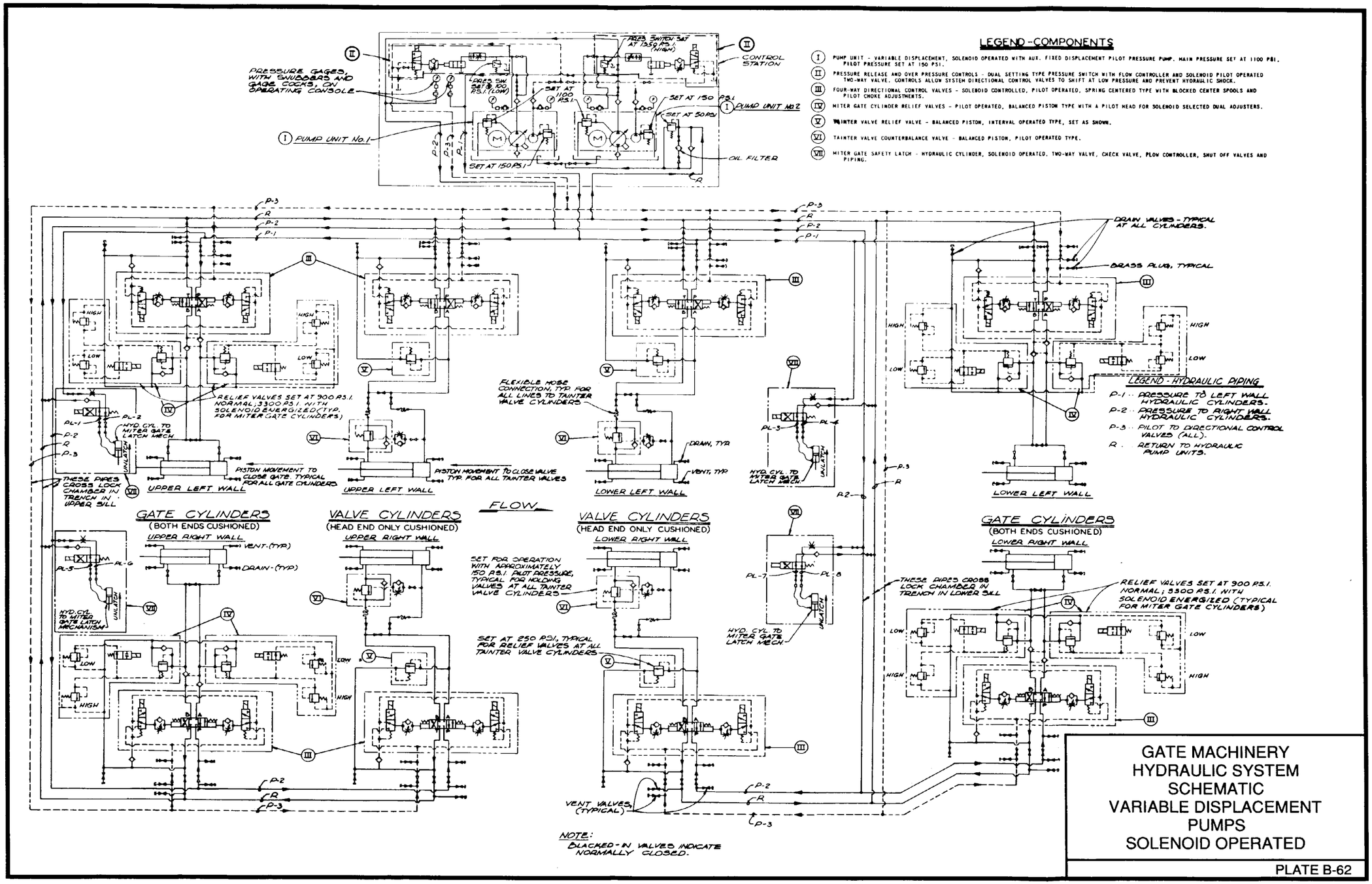

GATE MACHINERY
HYDRAULIC SYSTEM
SCHEMATIC
VARIABLE DISPLACEMENT
PUMPS
SOLENOID OPERATED

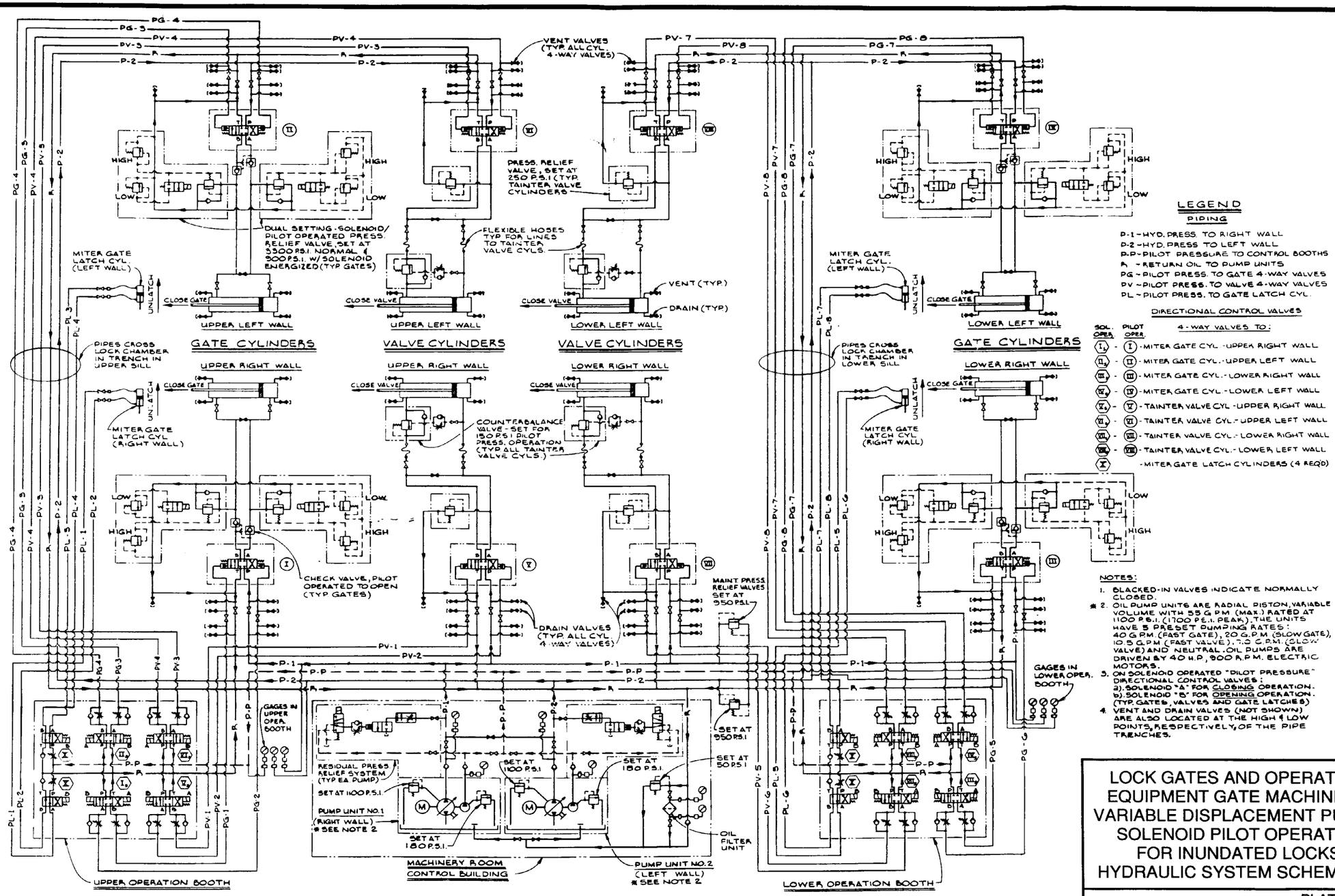

LOCK GATES AND OPERATING EQUIPMENT GATE MACHINERY VARIABLE DISPLACEMENT PUMPS SOLENOID PILOT OPERATED FOR INUNDATED LOCKS HYDRAULIC SYSTEM SCHEMATIC

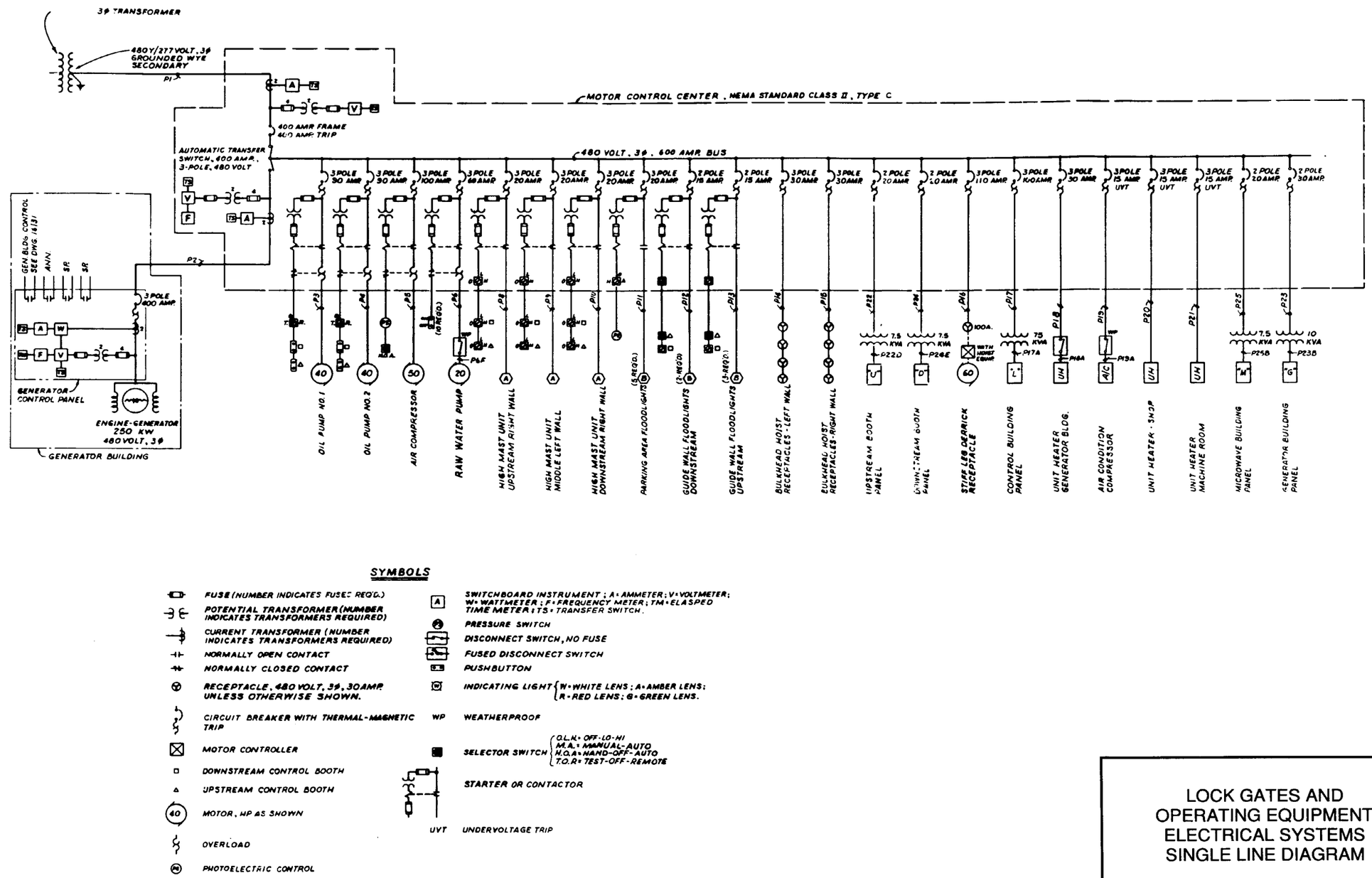

LOCK GATES AND OPERATING EQUIPMENT ELECTRICAL SYSTEMS SINGLE LINE DIAGRAM

43NB
BACK-UP/NORMAL TRANSFER SWITCH

CONTACT NUMBER	SWITCH POSITION BACK-UP	SWITCH POSITION NORMAL	CIRCUIT
1-2		X	ULV-OPEN
3-4		X	ULV-CLOSE
5-6		X	URV-OPEN
7-8		X	URV-CLOSE
9-10		X	DLV-OPEN
11-12		X	DLV-CLOSE
13-14		X	DRV-OPEN
15-16		X	DRV-CLOSE
17-18		X	ULG-OPEN
19-20		X	ULG-CLOSE
21-22		X	URG-OPEN
23-24		X	URG-CLOSE
25-26		X	DLG-OPEN
27-28		X	DLG-CLOSE
29-30		X	DRG-OPEN
31-32		X	DRG-CLOSE
33-34		X	ULG-LATCH
35-36		X	URG-LATCH
37-38		X	DLG-LATCH
39-40		X	DRG-LATCH
41-42		X	LZ
43-44		X	LW-RATE CNTRL
45-46	X		LW-RATE CNTRL
47-48		X	LW-20L1
49-50		X	LW-20L2
51-52		X	LW-20L3
53-54		X	LW-20L4
55-56		X	RW-RATE CNTRL
57-58	X		RW-RATE CNTRL
59-60		X	RW-20R1
61-62		X	RW-20R2
63-64		X	RW-20R3
65-66		X	RW-20R4

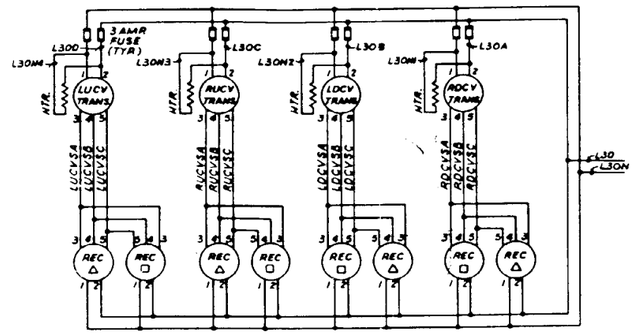

CULVERT VALVE SELSYN CONTROL

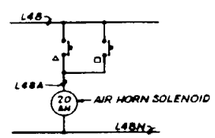

AIR HORN

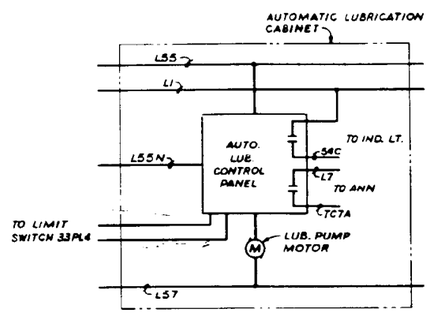

DOWNSTREAM LEFT GATE LUB SYSTEM
(OTHER 3 GATES LUB SYSTEM SIMILAR)

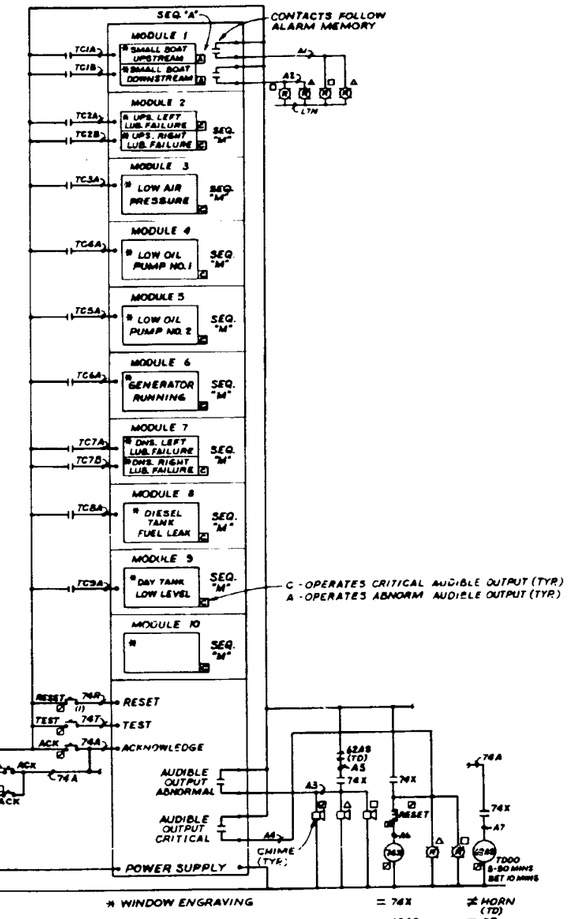

ANNUNCIATOR SYSTEM

UPSTREAM DOWNSTREAM

BUBBLER CONTROL

UPSTREAM
NAVIGATIONAL SIGNAL LIGHT
SELECTOR PUSH BUTTON

DEVICE	CONTACT NO.	POSITION FRONT VIEW GREEN F	GREEN D	OFF F	OFF D	RED F	RED D
INLU	1	X	-	X	-	X	X
	2	X	X	X	-	X	-
	3	-	X	-	-	-	-
	4	-	-	-	-	-	X

DOWNSTREAM DEVICE "INLD" SIMILAR
X - DENOTES CONTACTS CLOSED
F - FREE ; D - DEPRESSED

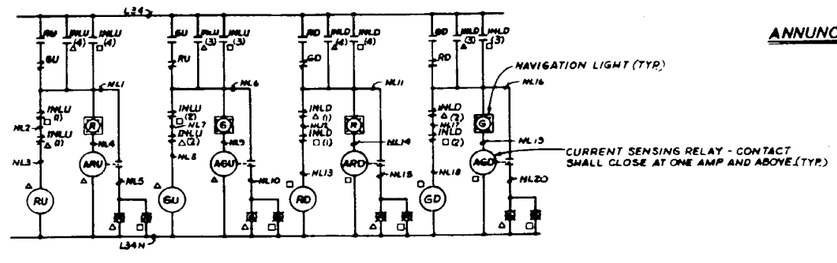

NAVIGATIONAL SIGNAL LIGHT CONTROL

LOCK GATES AND
OPERATING EQUIPMENT
ELECTRICAL SYSTEMS
CONTROL SCHEMATICS

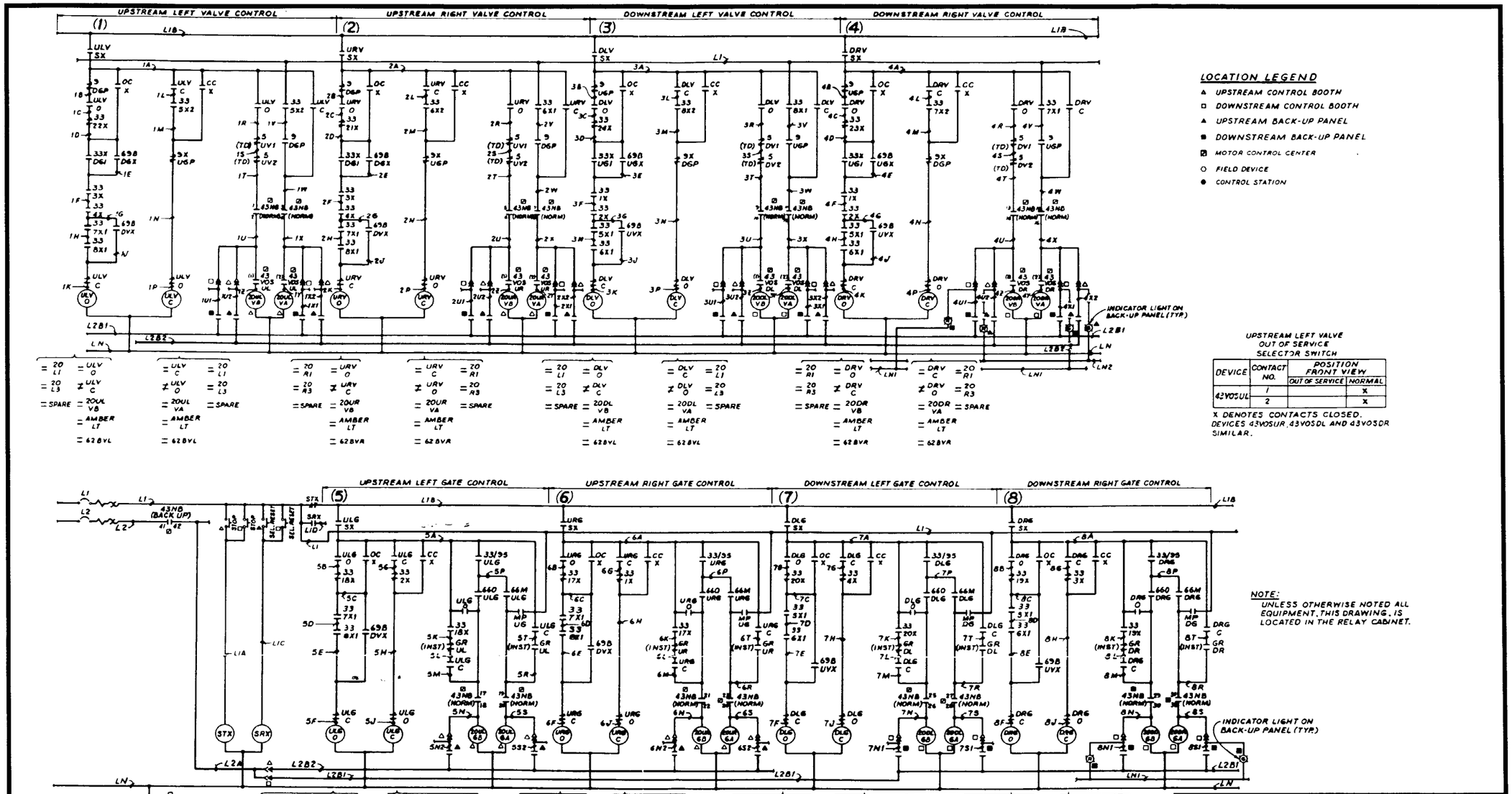

LOCATION LEGEND

- ▲ UPSTREAM CONTROL BOOTH
- □ DOWNSTREAM CONTROL BOOTH
- ▲ UPSTREAM BACK-UP PANEL
- ■ DOWNSTREAM BACK-UP PANEL
- ⊠ MOTOR CONTROL CENTER
- ○ FIELD DEVICE
- ● CONTROL STATION

UPSTREAM LEFT VALVE OUT OF SERVICE SELECTOR SWITCH

DEVICE	CONTACT NO.	POSITION FRONT VIEW	
		OUT OF SERVICE	NORMAL
43VOSUL	1		X
	2		X

X DENOTES CONTACTS CLOSED.
DEVICES 43VOSUR, 43VOSDL AND 43VOSDR SIMILAR.

NOTE:
UNLESS OTHERWISE NOTED ALL EQUIPMENT, THIS DRAWING, IS LOCATED IN THE RELAY CABINET.

LOCK GATES AND OPERATING EQUIPMENT ELECTRICAL SYSTEMS VALVE/GATE CONTROL SCHEMATIC

PLATE B-66 (SHEET 1 OF 5)

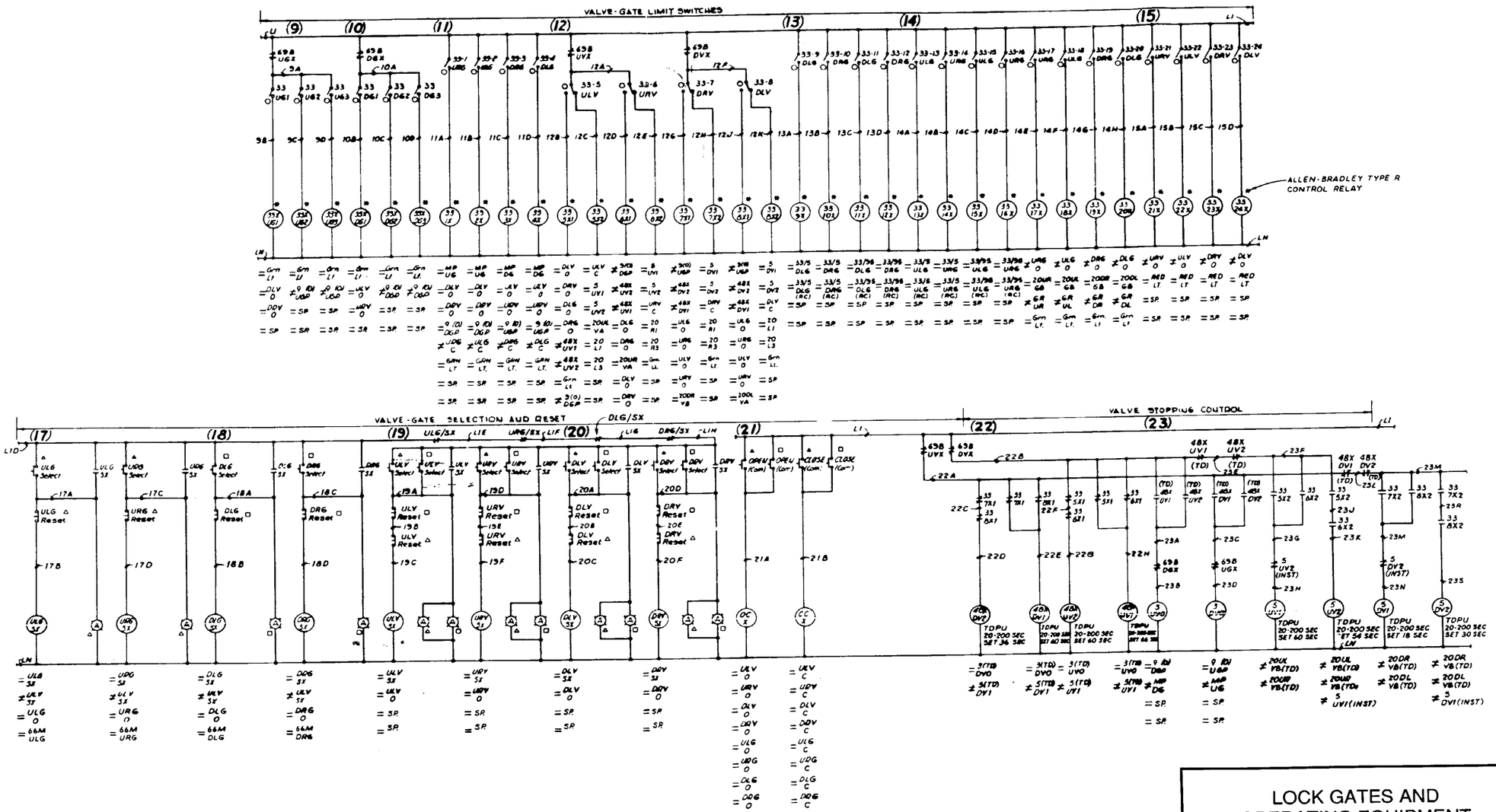

LOCK GATES AND OPERATING EQUIPMENT ELECTRICAL SYSTEMS VALVE/GATE CONTROL SCHEMATIC

PLATE B-66 (SHEET 2 OF 5)

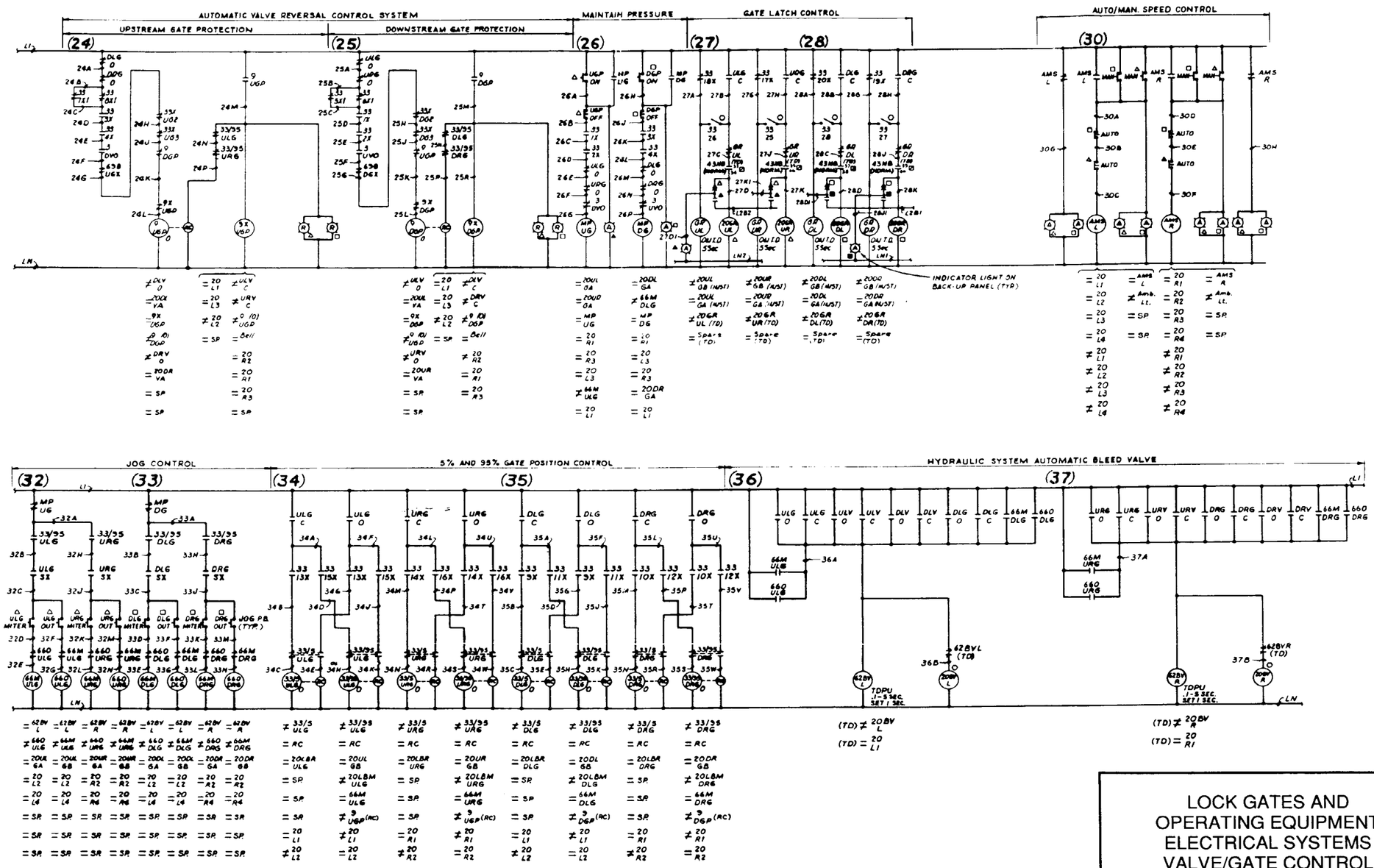

LOCK GATES AND OPERATING EQUIPMENT ELECTRICAL SYSTEMS VALVE/GATE CONTROL SCHEMATIC

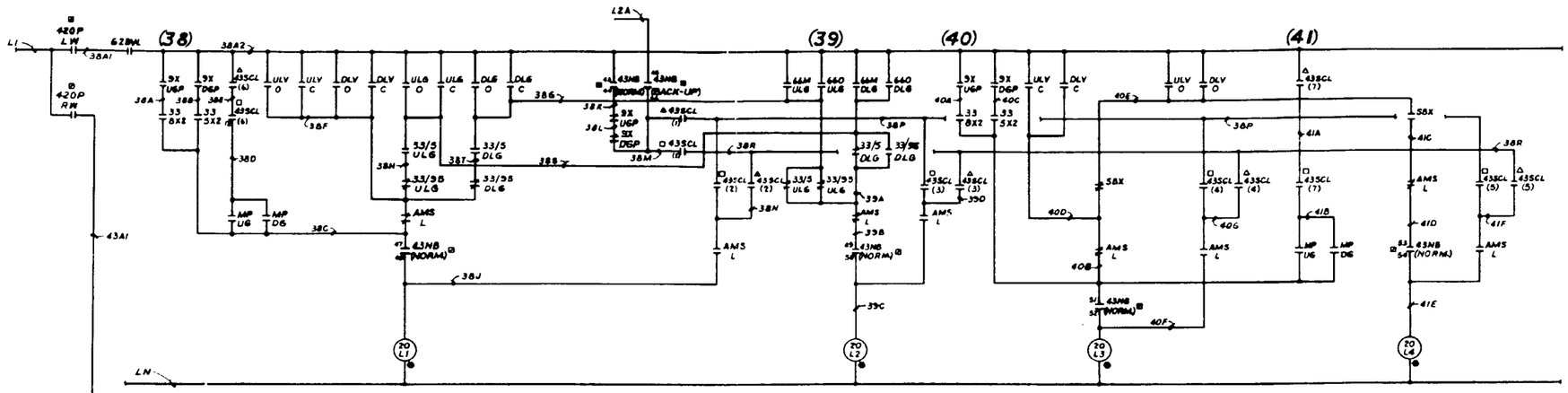

LEFT WALL HYDRAULIC PUMPING RATE CONTROL (OIL PUMP NO. 2)

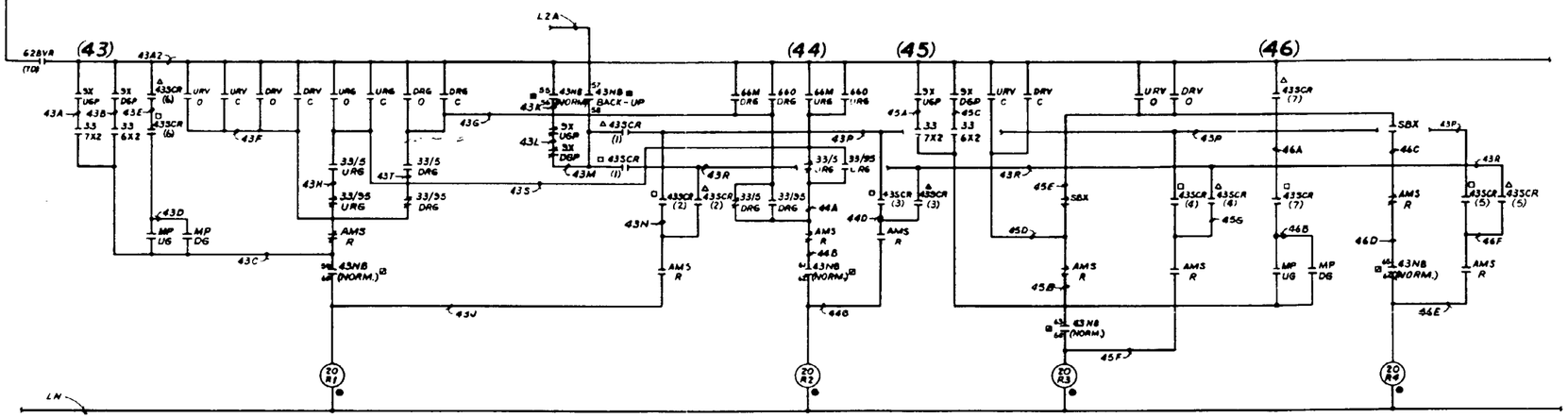

RIGHT WALL HYDRAULIC PUMPING RATE CONTROL (OIL PUMP NO. 1)

435CR	RIGHT WALL GATE VALVE SPEED CONTROL SWITCH		GATE FAST	GATE SLOW	NEUT	VALVE SLOW	VALVE FAST	BLACK PISTOL GRIP HANDLE
		1			X			ALL POSITIONS MAINTAINED
		2	X			X	X	
		3		X				
		4					X	
		5				X		
		6			X			
		7			X			
		8			X			

435CL SIMILAR
X DENOTES CONTACTS CLOSED

LOCK GATES AND OPERATING EQUIPMENT ELECTRICAL SYSTEMS VALVE/GATE CONTROL SCHEMATIC

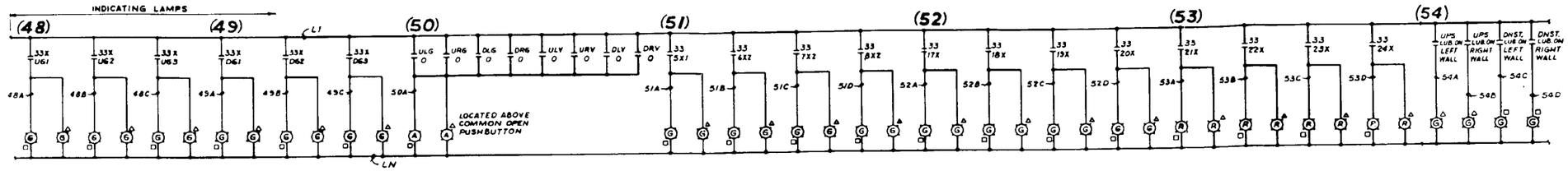

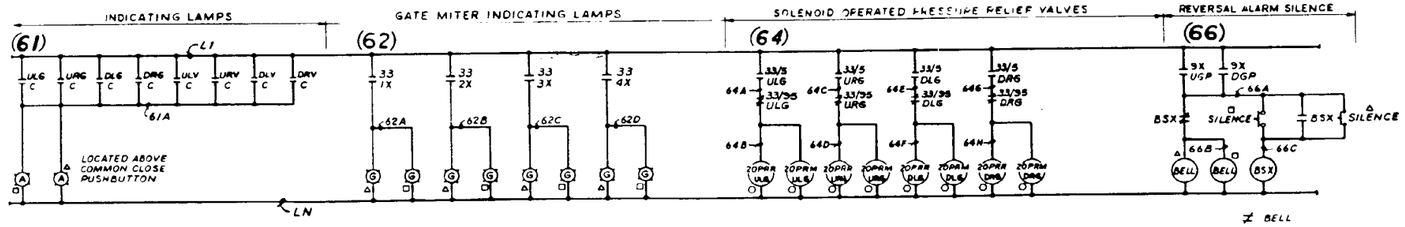

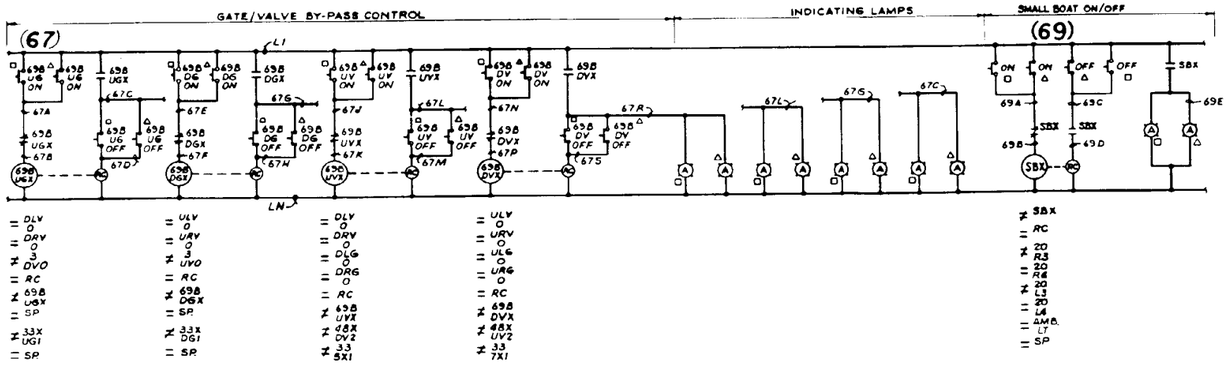

LIMIT SWITCH SCHEDULE			
LIMIT SWITCH	LOCATION	CONTACT OPERATION	REMARKS
33-1	URG MACH. RECESS	CLOSES WHEN GATE REACHES MITER POSITION.	MAGNET OPERATED
33-2	ULG MACH. RECESS	" " " " " "	" "
33-3	DRG MACH. RECESS	" " " " " "	" "
33-4	DLG MACH. RECESS	" " " " " "	" "
33-5	ULV MACH RECESS	CLOSES WHEN VALVE IS FULLY CLOSED.	MAGNET OPERATED
33-6	URV MACH. RECESS	" " " " " "	" "
33-7	DRV MACH. RECESS	" " " " " "	" "
33-8	DLV MACH RECESS	" " " " " "	" "
33-9	DLG MACH RECESS	CLOSES WHEN GATE IS 5% OUT OF THE RECESS.	MAGNET OPERATED
33-10	DRG MACH. RECESS	" " " " " "	" "
33-11	DLG MACH. RECESS	CLOSES WHEN GATE IS 35% OUT OF THE RECESS.	" "
33-12	DRG MACH RECESS	" " " " " "	" "
33-13	ULG MACH RECESS	SAME AS 33-9.	MAGNET OPERATED
33-14	URG MACH. RECESS	SAME AS 33-9.	" "
33-15	ULG MACH. RECESS	SAME AS 33-11	" "
33-16	URG MACH. RECESS	SAME AS 33-11	" "
33-17	URG GATE RECESS	CLOSES WHEN GATE IS FULLY OPEN.	MAGNET OPERATED
33-18	ULG GATE RECESS	" " " " " "	" "
33-19	DRG GATE RECESS	" " " " " "	" "
33-20	DLG GATE RECESS	" " " " " "	" "
33-21	URV MACH. RECESS	CLOSES WHEN VALVE IS FULLY OPEN.	MAGNET OPERATED
33-22	ULV MACH. RECESS	" " " " " "	" "
33-23	DRV MACH. RECESS	" " " " " "	" "
33-24	DLV MACH. RECESS	" " " " " "	" "
33-25	URG LATCH	CLOSES WHEN GATE LATCH IS CLEAR	MAGNET OPERATED
33-26	ULG LATCH	" " " " " "	" "
33-27	DRG LATCH	" " " " " "	" "
33-28	DLG LATCH	" " " " " "	" "
33-DG1	DG TOP OF GATE	CLOSES WHEN GATES ARE MITERED.	MAGNET OPERATED
33-DG2	DG MIDDLE OF GATE	" " " " " "	" "
33-DG3	DG BOTTOM OF GATE	" " " " " "	" "
33-UG1	UG TOP OF GATE	" " " " " "	" "
33-UG2	UG MIDDLE OF GATE	" " " " " "	" "
33-UG3	UG BOTTOM OF GATE	" " " " " "	" "
33PL1	URG MACH. RECESS	CLOSES WHEN GATE IS 50% OUT OF THE RECESS	MAGNET OPERATED
33PL2	ULG MACH RECESS	" " " " " "	" "
33PL3	DRG MACH. RECESS	" " " " " "	" "
33PL4	DLG MACH. RECESS	" " " " " "	" "

LOCK GATES AND
OPERATING EQUIPMENT
ELECTRICAL SYSTEMS
VALVE/GATE CONTROL
SCHEMATIC

PLATE B-66 (SHEET 5 OF 5)

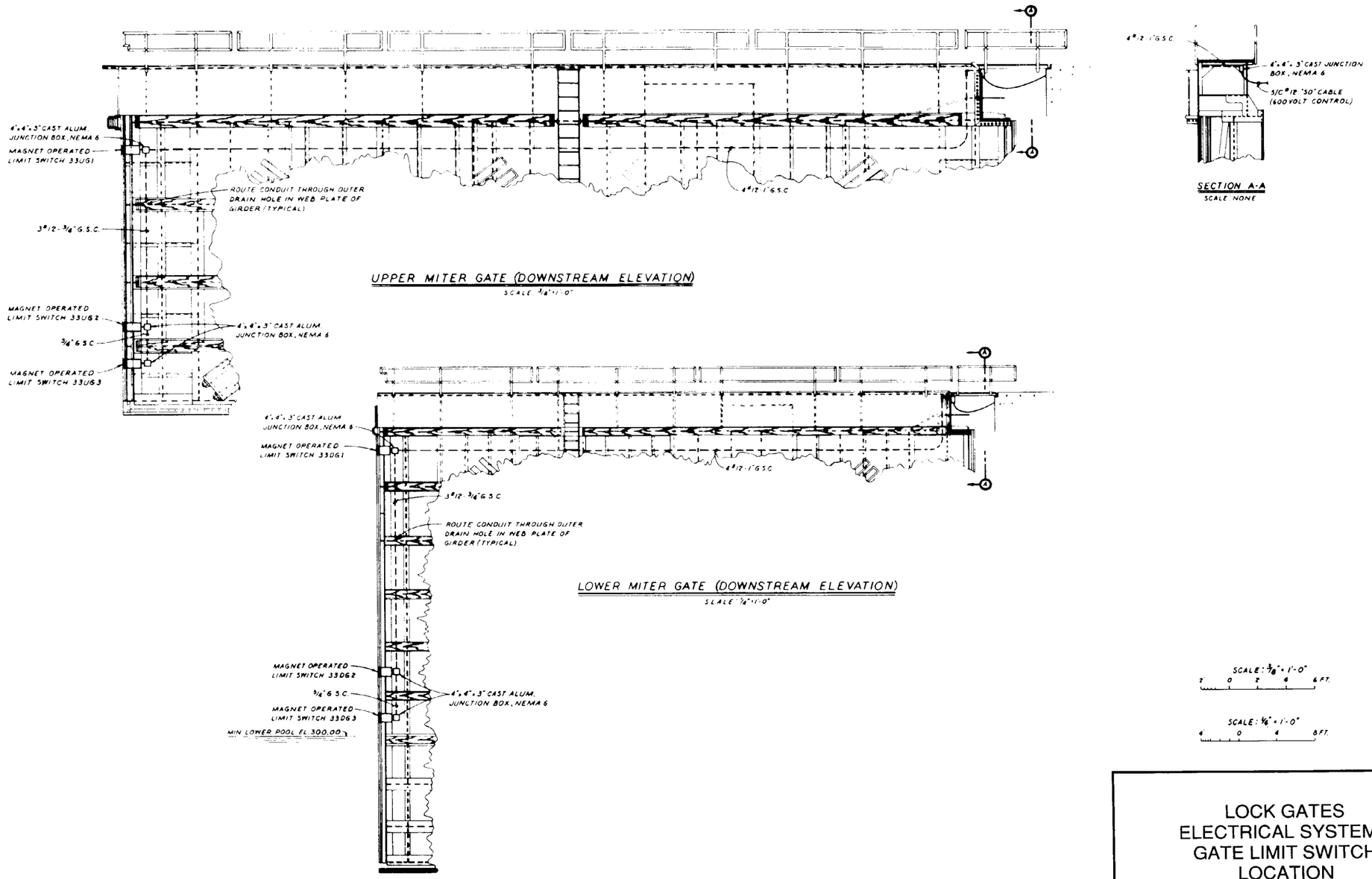

LOCK GATES
ELECTRICAL SYSTEMS
GATE LIMIT SWITCH
LOCATION

PLATE B-67 (SHEET 1 OF 2)

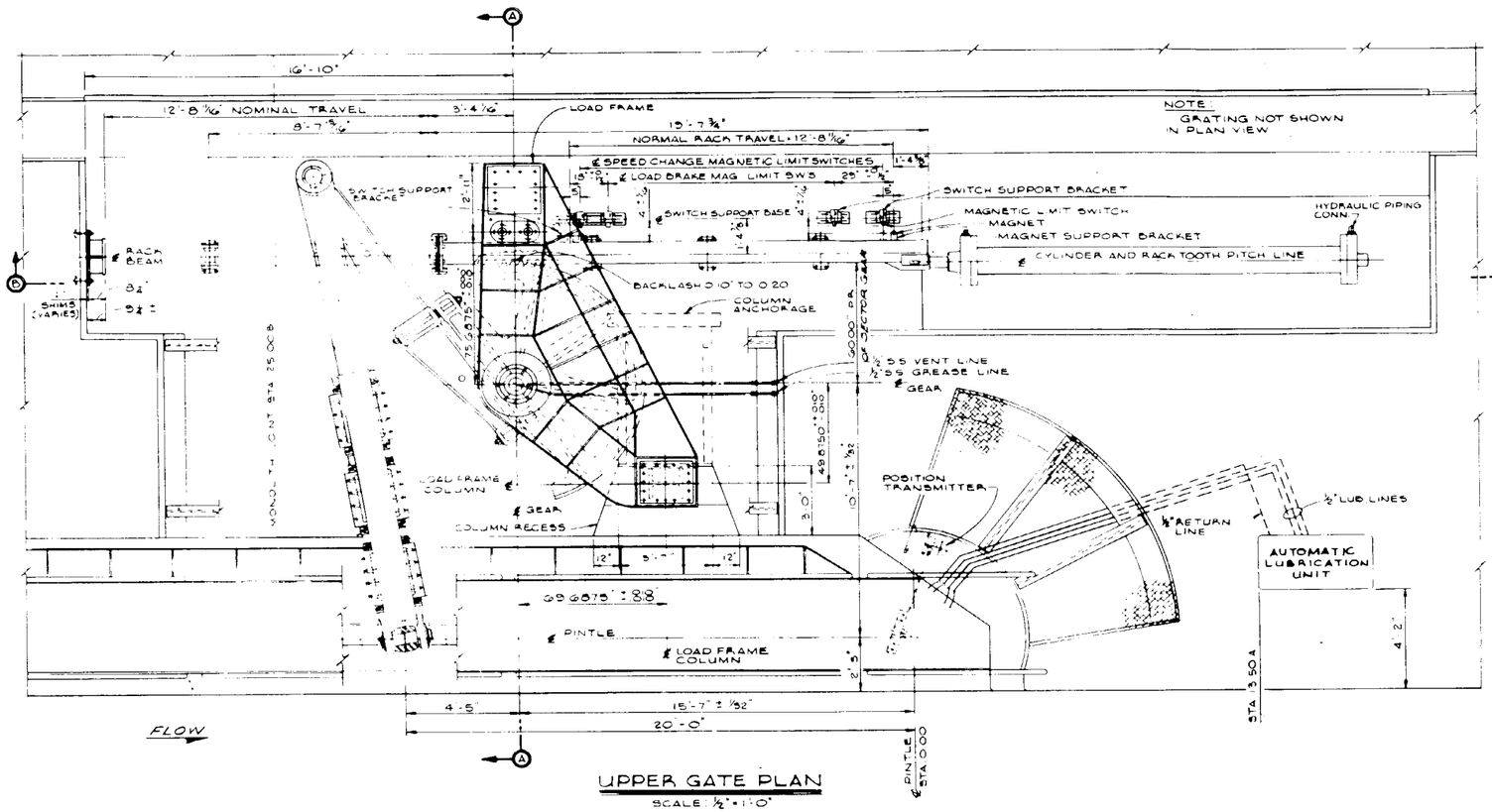

UPPER GATE PLAN
SCALE: 1/2" = 1'-0"

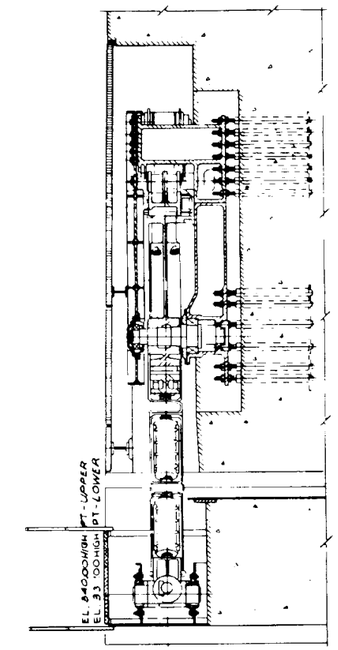

SECTION A-A
SCALE: 1/2" = 1'-0"

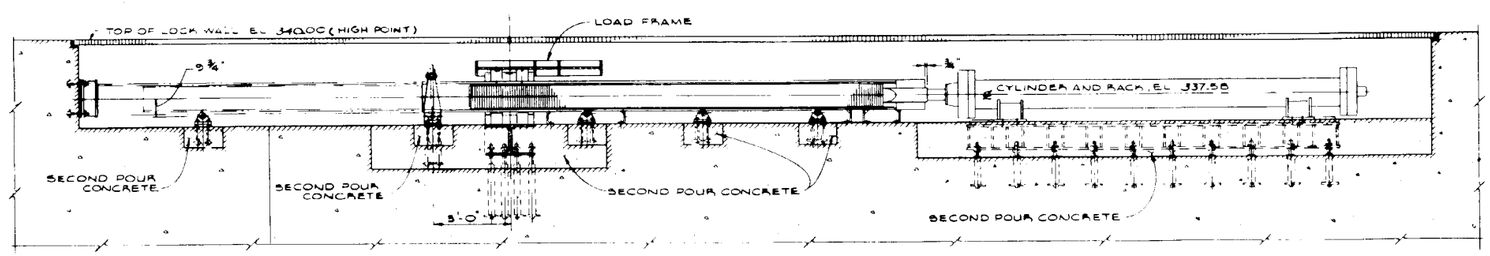

SECTION B-B
SCALE: 1/2" = 1'-0"

LOCK GATES
ELECTRICAL SYSTEMS
GATE LIMIT SWITCH
LOCATION

PLATE B-67 (SHEET 2 OF 2)

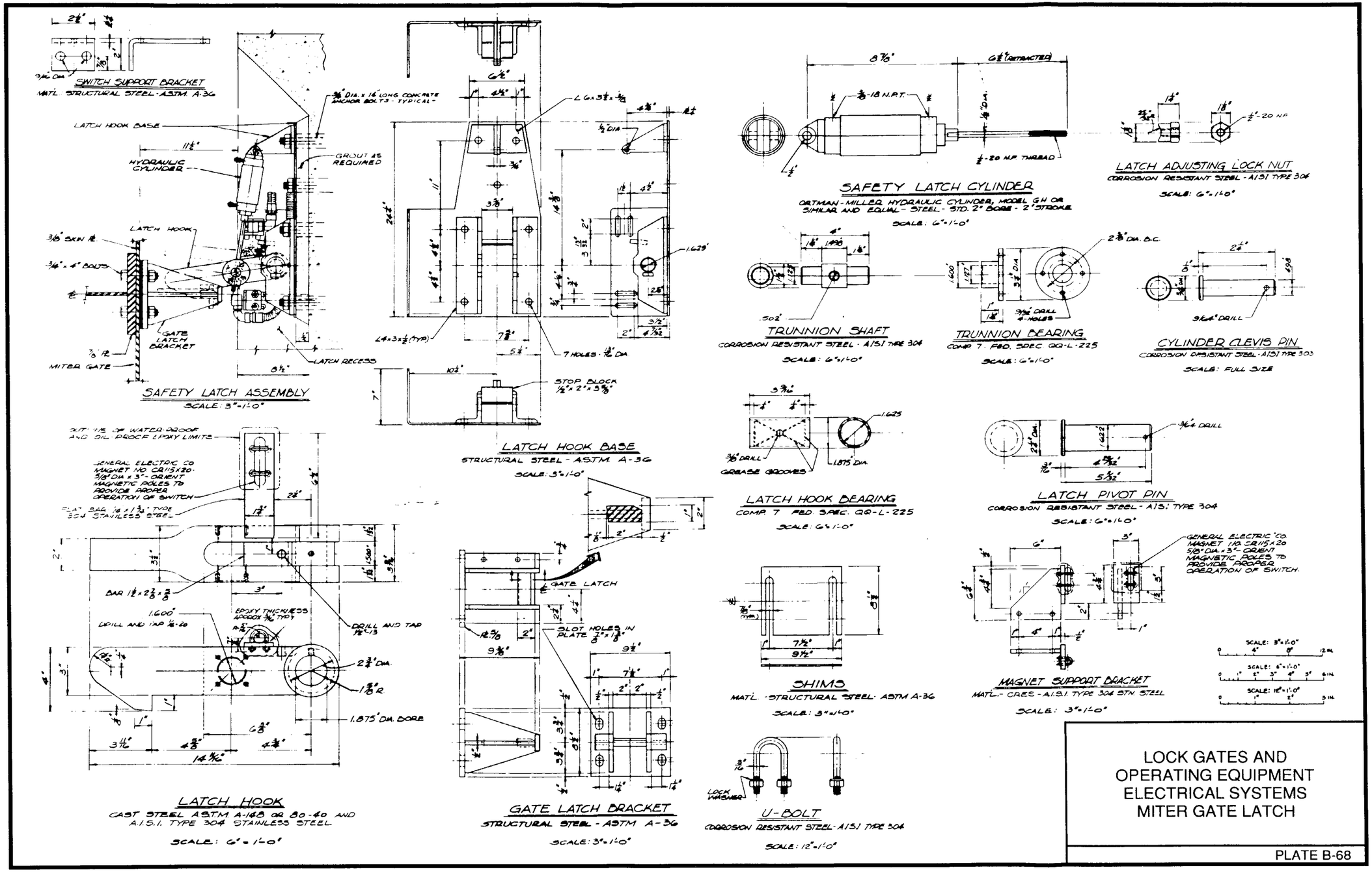

LOCK GATES AND
OPERATING EQUIPMENT
ELECTRICAL SYSTEMS
MITER GATE LATCH

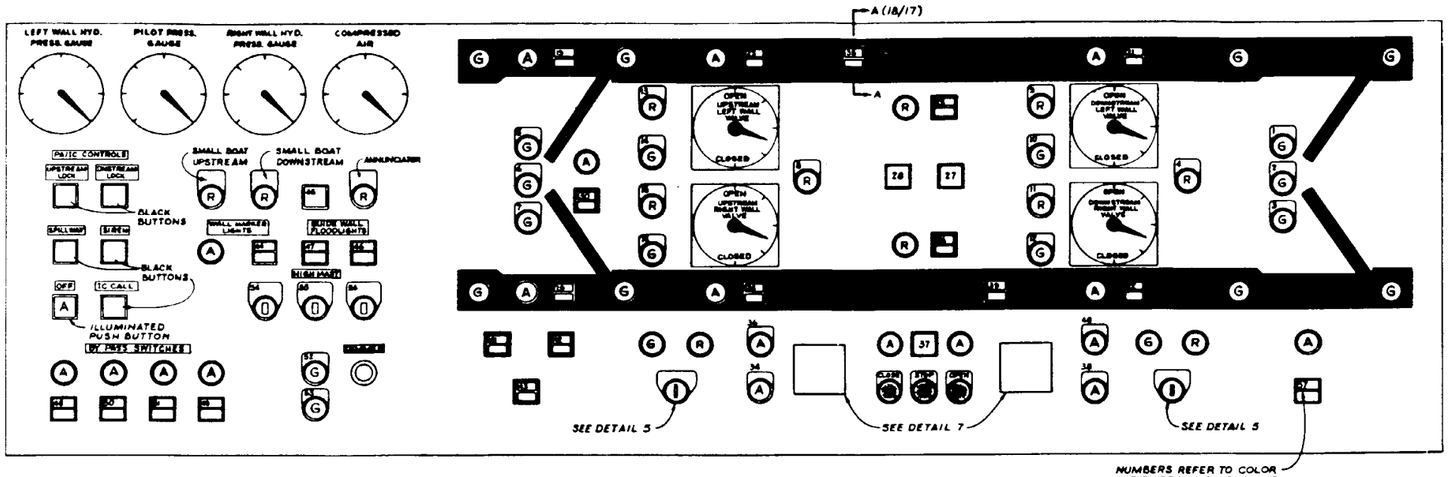

CONTROL CONSOLE - UPSTREAM BOOTH

SCALE: NONE

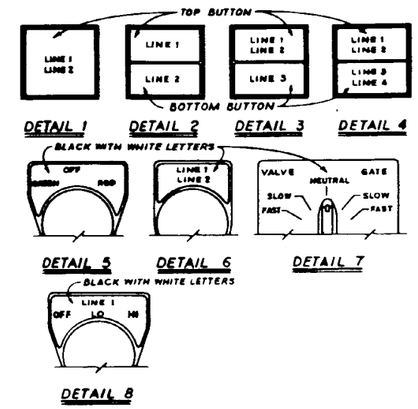

COLOR AND ENGRAVING SCHEDULE							
ITEM NO.	DETAIL	ENGRAVING LINE 1	LINE 2	LINE 3	LINE 4	BUTTON COLOR TOP	BOTTOM
1	6	DNST. GATE	TOP MITER				
2	6	DNST. GATE	MID MITER				
3	6	DNST. GATE	BOT. MITER				
4	6	DNST. VAL.	REVERSAL				
5	6	UPST. GATE	TOP MITER				
6	6	UPST. GATE	MID MITER				
7	6	UPST. GATE	BOT MITER				
8	6	UPST. VAL.	REVERSAL				
9, 11	6	DNST. VAL.	FULL OPEN				
10, 12	6	DNST. VAL.	FULL CLO.				
13, 15	6	UPST. VAL.	FULL OPEN				
14, 16	6	UPST. VAL.	FULL CLO.				
17, 18	3	DNST. GATE	SELECT	RESET		YELLOW	WHITE
19, 20	3	UPST. GATE	SELECT	RESET		YELLOW	WHITE
21, 22	3	DNST. VAL.	SELECT	RESET		RED	WHITE
23, 24	3	UPST. VAL.	SELECT	RESET		RED	WHITE
25, 26	3	HYD. PUMP	START	STOP		RED	GREEN
27	1	REV. ALARM	SILENCE			BLACK	
28	1	AIR	HORN			ORANGE	
29, 30	3	NORM. PRES	ON	OFF		ORANGE	GREEN
31, 32	3	DNST. GATE	MITER	OUT		YELLOW	BLACK
33	4	BUBBLER	LEFT WALL	BUBBLER	RT. WALL	BLUE	BLACK
34	6	LEFT WALL	MANUAL				
35	2	AUTO	MANUAL			ORANGE	GREEN
36	6	LEFT WALL	AUTO				
37	1	SELECTION	RESET			ORANGE	
38	6	RT. WALL	MANUAL				
39	2	AUTO	MANUAL			ORANGE	GREEN
40	6	RT. WALL	AUTO				
41, 42	3	UPST. GATE	MITER	OUT		YELLOW	BLACK
43	4	BUBBLER	LEFT WALL	BUBBLER	RT. WALL	BLUE	BLACK
44	2	ON	OFF			ORANGE	GREEN
45	1	ANNUNC	ACK			BLACK	
46	3	[illegible]	ON	OFF		ORANGE	GREEN
47	3	UPSTREAM	ON	OFF		ORANGE	GREEN
48	3	UPSTREAM	GATE	OFF		ORANGE	GREEN
49	3	DNSTREAM	GATE	OFF		ORANGE	GREEN
50	3	UPSTREAM	VALVE	OFF		ORANGE	GREEN
51	3	DNSTREAM	VALVE	OFF		ORANGE	GREEN
52	6	LEFT WALL	LUB ON				
53	6	RIGHT WALL	LUB ON				
54	8	UPSTREAM					
55	8	MIDDLE					
56	8	DOWNSTREAM					
57	3	SMALL	BOAT	OFF		WHITE	WHITE

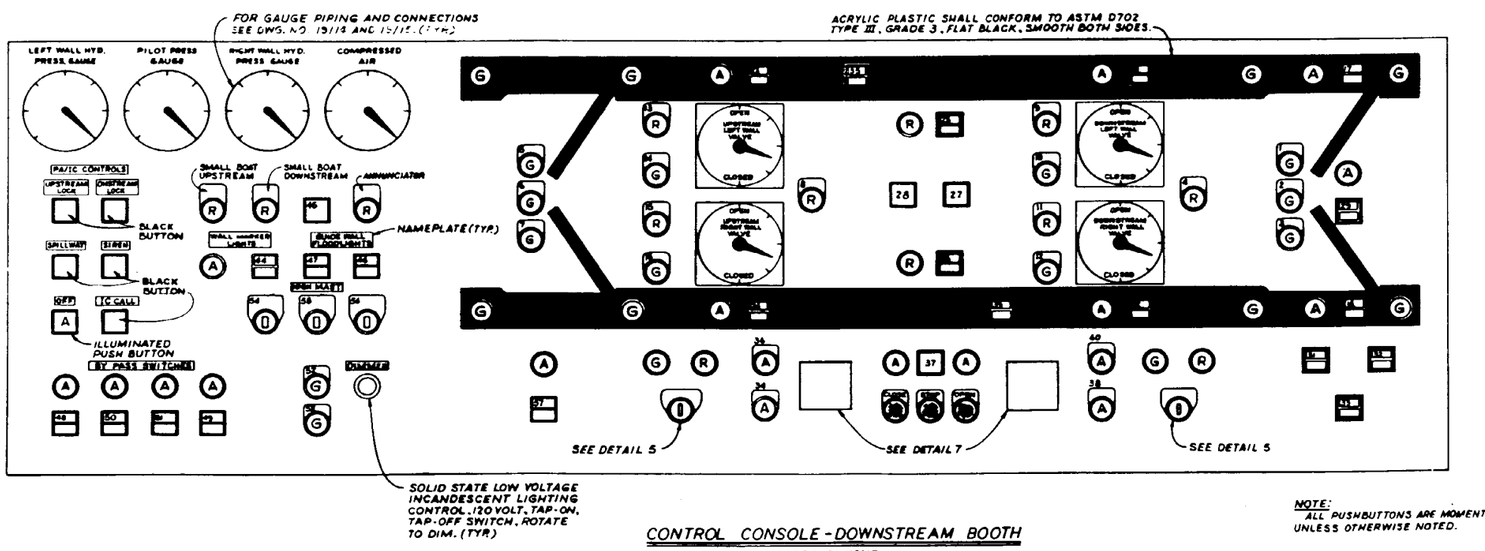

CONTROL CONSOLE - DOWNSTREAM BOOTH

SCALE: NONE

NOTE:
ALL PUSHBUTTONS ARE MOMENTARY UNLESS OTHERWISE NOTED.

LOCK GATES AND OPERATING EQUIPMENT
ELECTRICAL SYSTEMS
CONTROL CONSOLE
LAYOUT

MATERIAL LIST

ITEM	DESCRIPTION	MANUFACTURER	CATALOG NO.	NO. REQ'D
A	DUAL INDICATING LIGHT UNIT TRANSFORMER TYPE RED LENS TO READ "VALVE OPEN" OR "GATE OPEN" AND GREEN LENS TO READ "VALVE CLOSE" OR "GATE CLOSE" AS SHOWN	CUTTER HAMMER	E3DCA INDICATOR E3DKG10 RED LENS E3DKG20 GREEN LENS	6 6 6
B	TWO BUTTON OPERATOR WITH BLACK RELEASE BAR MAINTAINED CONTACT RED BUTTION MARKED "OPEN" AND GREEN BUTTOON MARKED "CLOSE". 2 N. O. CONTACTS. OPEN AND CLOSED BUTTONS ARE MECHANICALLY INTERLOCKED. STOP RELEASES DEPRESSED BUTTON		E3QAG OPERATOR KC200 REDBUTTON KC300 GREEN BUTTON E3DKLA1 CONTACT BLOCKS E3DKTG FULL SHROUD	6 6 6 12 6
C	SINGLE BUTTON OPERATOR WITH "OFF" RELEASE BAR AND TRANSFORMER TYPE INDICATING LIGHT. AMBER LENS TO READ "LATCH OPERATE" YELLOW BUTTON "OPER" RED BUTTON "OFF"	CUTTER HAMMER	E3QG OPERATOR E3DKG30 AMBER LENS E3DKC400 YELLOW BUTTON E3DKLA1 CONTACT BLOCK (1 N. O.) E3DNTG FULL SHROUD	2 2 2 2 2
D	WATERTIGHT CABLE CONNECTION		CGB 296	1
E	CABLE PLUG WITH MATCHING SQUARE FLANGED RECEPTACLE WITH WIRE SEALED GROMMETS AND DUST CAP 19 WIRE, 19 POLE	ITT CANNON ELECTRIC	CV3456W22-14PN PLUG CV3450W22-14SN RECEPT	1 1
F	TERMINAL BLOCK IS 20 TERMINALS WITH MARKER STRIP IMPRINTED WITH 1/8" LETTERS AS SHOWN ON CONSOLE WIREING DIAGRAM MOUNT INSIDE CONSOLE INSULATED TERMINALS ON WIRES.	TRO CINCH CONNECTORS AMP	345-11-20-001, BLOCK 354-11-20-010, MARKER 320619 WIRE TERMINALS	1 1 34

MATERIAL LIST

ITEM	DESCRIPTION	MANUFACTURER	CATALOG NO.	NO. REQ'D
G	1/4" H X 13" W X 4-3/4" D ENCLOSURE W/BLANK HINGED COVER NEOPRENE GASKETED 14 GAUGE ALUMINUM 6061-T6 ALL SEAMS CONTINUOUSLY WELDED, RUBBER GROMMENTS ON METAL SURFACE. GROMMETS TO BE SECURED TO ENCLOSURE WITH SCREWSAND NUTS.			1
H	1 9/C - 16 CABLE WITH XL POLYETHYNE INSULATION OVER INDIVIDUAL CONDUCTORS WITH OVERALL NEOPRENE JACKET	GENERAL ELECTRIC	S1-58109	10 FT
J	ENGRAVE NAMEPLATE BAKELITE OR AN EQUIVALENT PLASTIC WITH 3/32 INCH MINIMUM THICKNESS FASTEN TO CONSOLE WITH TWO CORROSION RESISTANT ROUNDHEAD SCREWS.			8

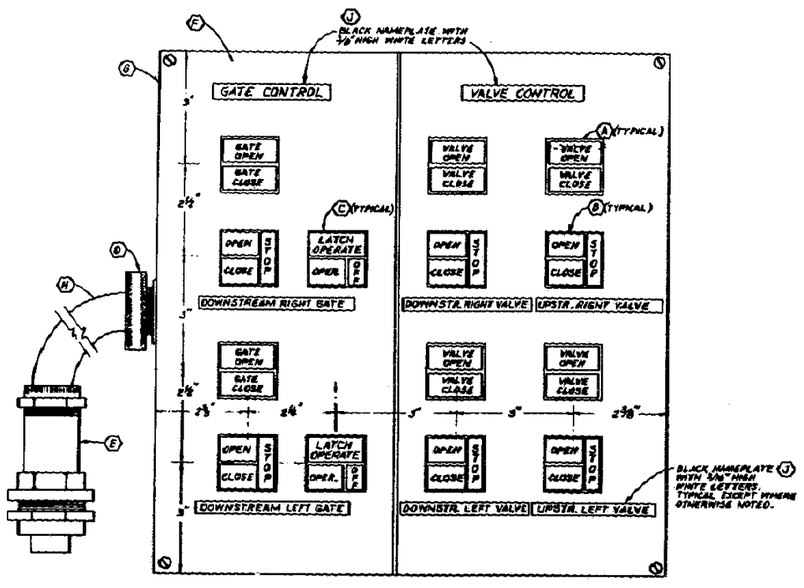

DOWNSTREAM PORTABLE BACKUP CONSOLE

SCALE: 3/8" = 1'

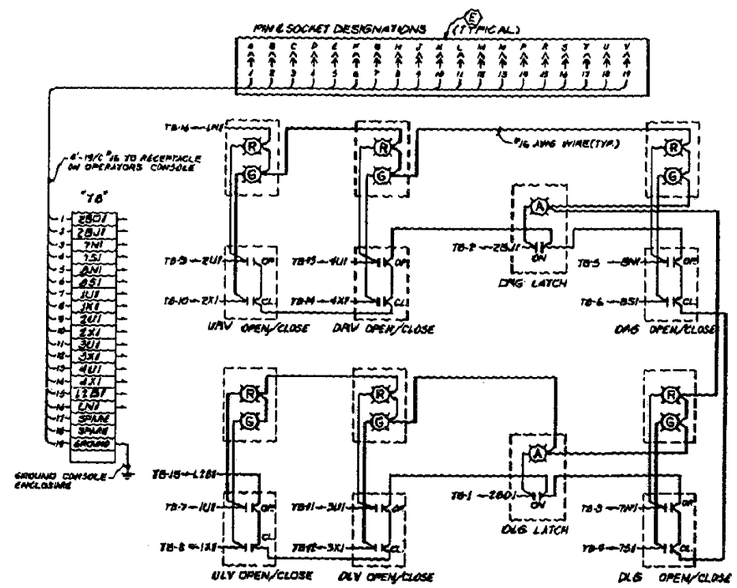

PORTABLE BACKUP CONSOLE WIRING DIAGRAM

LOCK GATES AND OPERATING EQUIPMENT ELECTRICAL SYSTEMS BACKUP CONTROL CONSOLE

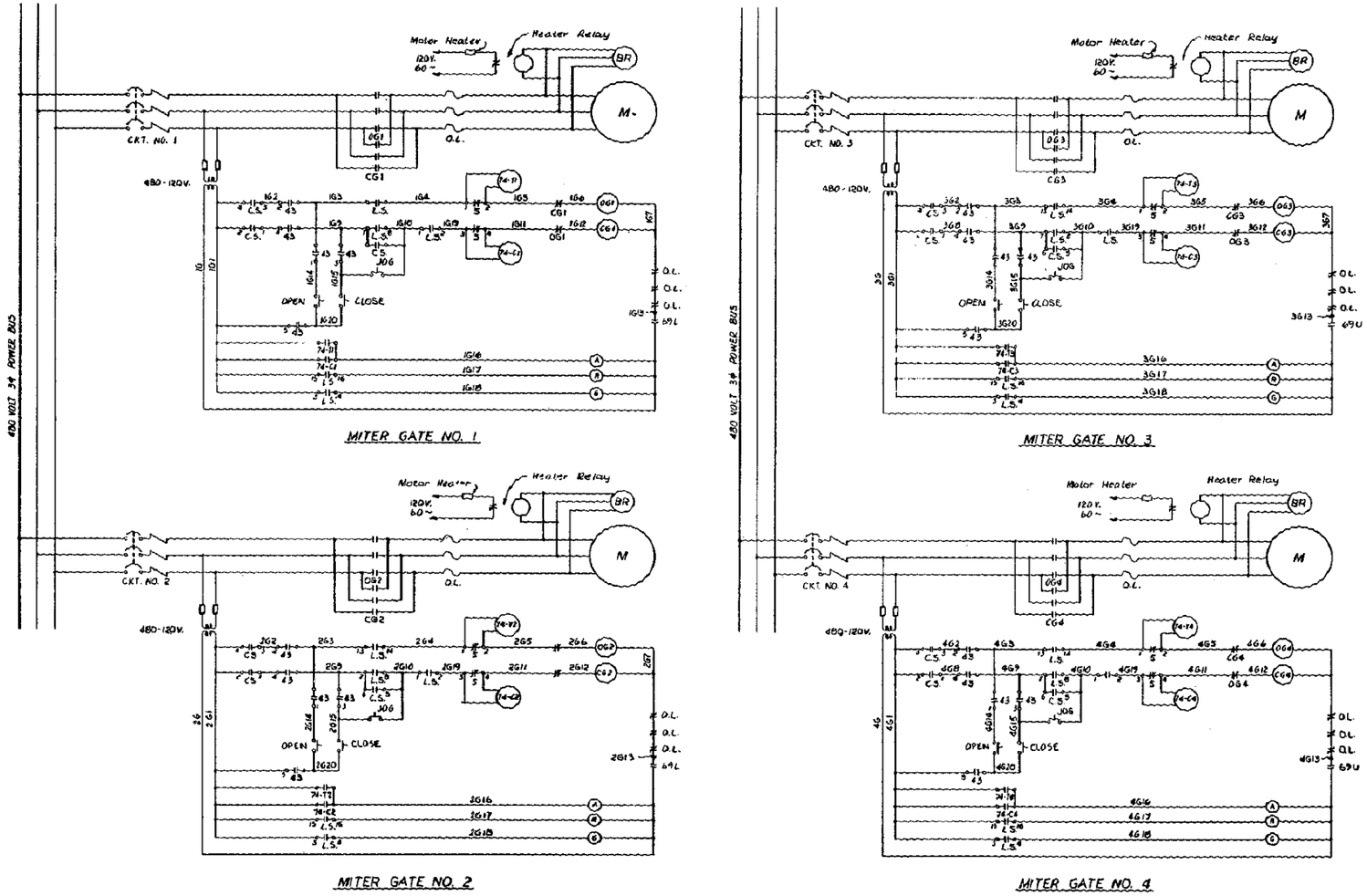

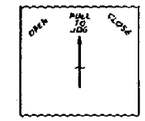

ESCUTCHEON PLATE
Spring Return to Off.

CONTACT	POSITION			
CLOSE	OPEN	CLOSE	OFF	OPEN	PULL
1-2	X			X
3-4			X	
5-6				X

MITER GATE CONTROL SWITCH
Device C.S.

Section	Terminal No.	Duty	Closed	Open
A	1-2	Extreme Limit Closed		
	3-4	Indicating Lamp		
	5-6	Master Interlock		
	7-8	Stop		
B	9-10	Spare		
	11-12	Spare		
	13-14	Travel Limit Open		
C	15-16	Indicating Lamp		
	17-18	Spare		

MITER GATE LIMIT SWITCH
Device L.S.
Traveling Nut Type

CONTACT		POSITION		
LEVER END		COMP	NORMAL	TENSION
1-2		X	X	
3-4			X	X

MITER GATE
STRUT STRESS LIMIT SWITCH
Device No. 5

LEGEND

C.S.	MITER GATE CONTROL SWITCH
CG1	CLOSE CONTACTOR
OG1	OPEN CONTACTOR
O.L.	MOTOR OVERLOAD
5	STRUT STRESS LIMIT SWITCH
43	LOCAL-REMOTE PERMISSIVE SWITCH
69L	PERMISSIVE SWITCH LOWER BOOTH
69U	PERMISSIVE SWITCH UPPER BOOTH
74C1	ALARM RELAY - COMPRESSION
74T1	ALARM RELAY - TENSION

LOCK GATES
ELECTRICAL SYSTEMS
CONTROL SCHEMATIC
MITER GATES
SINGLE-SPEED MOTOR

CONTACT NO.	HANDLE IN NORMAL POSITION			HANDLE PULLED OUT			HANDLE PUSHED IN		
	CLOSE	NEUTRAL	OPEN	CLOSE	NEUTRAL	OPEN	CLOSE	NEUTRAL	OPEN
1	X			X			X		
2			X			X			X
3	X	X	X	X	X	X			
4				X	X	X			

CONTACT DIAGRAM FOR GATE CONTROL SWITCHES 16, 26, 36, 46, 17, 27, 37, 47, 18, 38, 19 AND 39

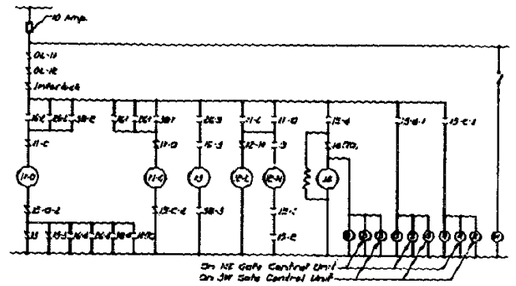

NORTHWEST GATE

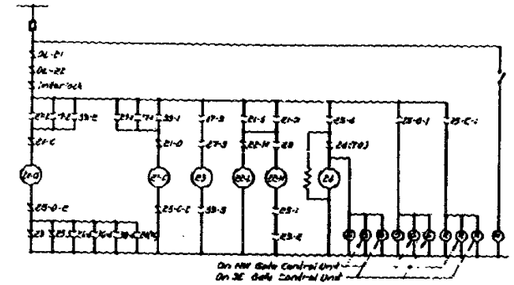

NORTHEAST GATE

GATE CONTROL SCHEMATIC DIAGRAMS

SWITCH NUMBER	CONTACT NUMBER	GATE POSITION: FULLY CLOSED	10° FROM CLOSED	45° FROM CLOSED	10° FROM OPEN	FULLY OPEN
15, 25, 35 & 45	1					
	2					
	3					
	4					
15-0, 25-0, 35-0 & 45-0	1					
	2					
15-C, 25-C, 35-C & 45-C	1					
	2					

LIMIT SWITCH OPERATION

CONTROL UNIT EQUIPMENT DESIGNATION			
SYMBOL	QUAN.	DESCRIPTION	
11-O	1	Contactor - Open	NEMA size 1 Magnetic Reversing Contactor, mechanically interlocked
11-C	1	Contactor - Close	
21-O	1	Contactor - Open	
21-C	1	Contactor - Close	
31-O	1	Contactor - Open	
31-C	1	Contactor - Close	
41-O	1	Contactor - Open	
41-C	1	Contactor - Close	
12-L	1	Contactor - Low Speed	NEMA Size 1 Magnetic Contactor
22-L	1		
32-L	1		
42-L	1		
12-H	1	Contactor - High Speed	
22-H	1		
32-H	1		
42-H	1		
13	1	Control Relay	
23	1		
33	1		
43	1		
14	1	Time Delay Relay	
24	1		
34	1		
44	1		
15	1	Relay Limit Switch	
25	1		
35	1		
45	1		
15-O	1	Limit Switch - Open	
25-O	1		
35-O	1		
45-O	1		
15-C	1	Limit Switch - Close	
25-C	1		
35-C	1		
45-C	1		
16	1	Control Switch	
26	1		
36	1		
46	1		
17	1	Control Switch	
27	1		
37	1		
47	1		
18	1	Control Switch	
38	1		
19	1	Control Switch	
39	1		

Notes:
Designation numbers from 10-20 refer to Northeast Gate
Designation numbers from 30-38 refer to Northwest Gate
Designation numbers from 40-48 refer to Southeast Gate
Designation numbers from 49-39 refer to Southwest Gate.
Lighting Circuit Breakers are 15 amperes, single-pole.
Wiring for South Gates is identical to North Gates wiring, except as otherwise noted.
All wire is No. 12 A.W.G. unless otherwise noted

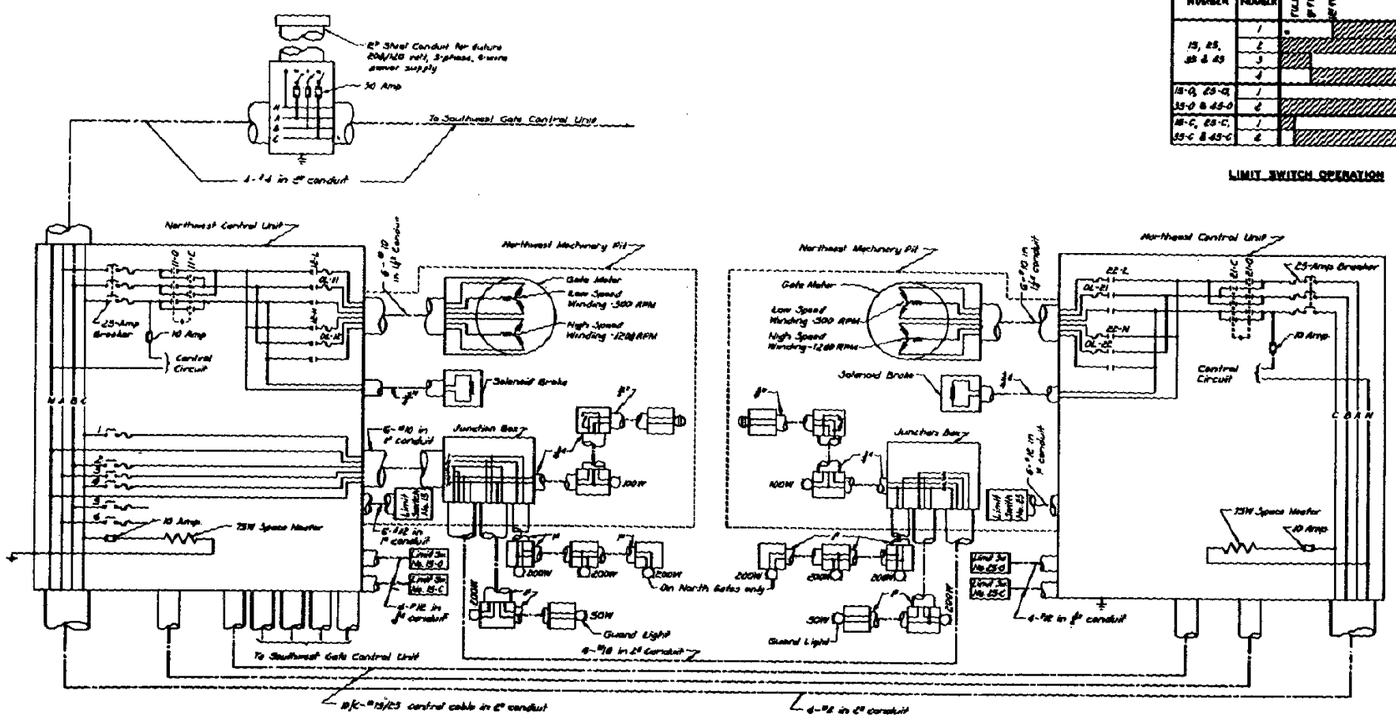

POWER AND LIGHT WIRING DIAGRAM

LOCK GATES
ELECTRICAL SYSTEMS
CONTROL SCHEMATIC
MITER GATES
TWO-SPEED MOTOR

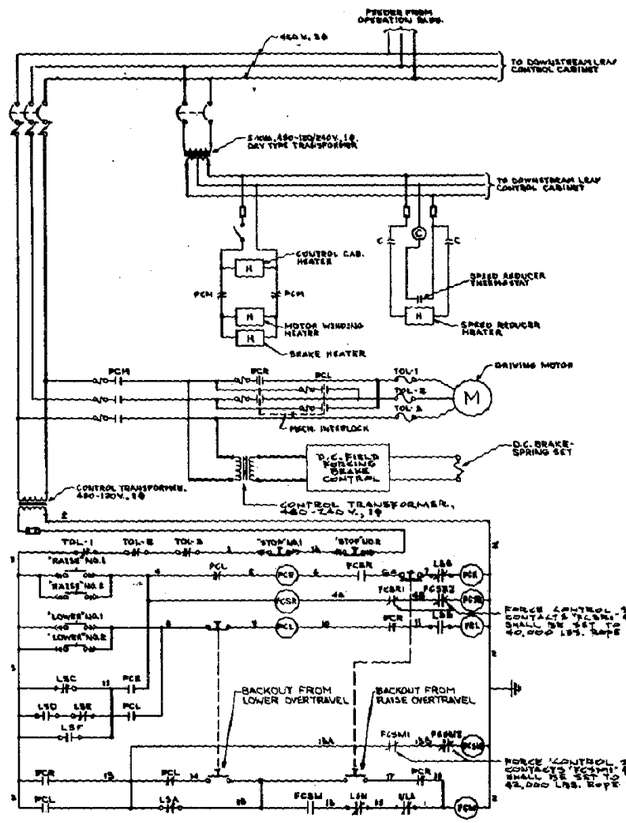

BASIC WIRING DIAGRAM
ONE GATE LEAF

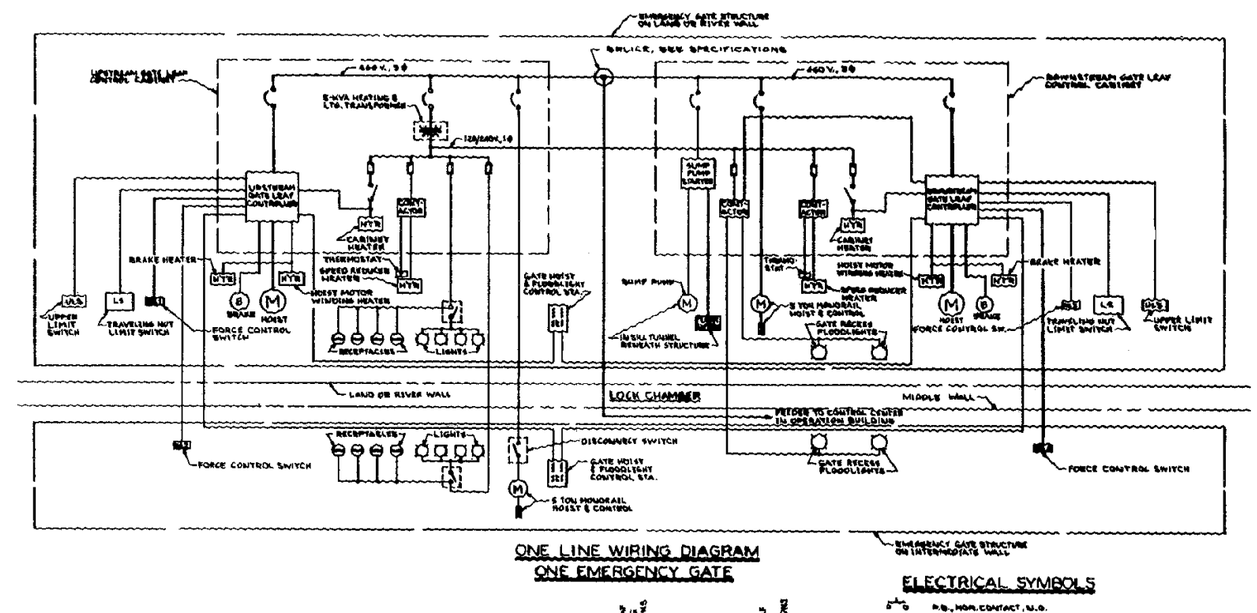

ONE LINE WIRING DIAGRAM
ONE EMERGENCY GATE

SEQUENCE OF OPERATION

CONTACT DESIGNATION	CIRCUIT DUTY	GATE POSITION: O'TRAVEL LOWERED	LOWERED	INT. POS. (START-UP)	INT. POS. (STOP-DOWN)	INTERMEDIATE (START-UP)	INTERMEDIATE (STOP-DOWN)	INTERMEDIATE (START-DOWN)	INTERMEDIATE (STOP-UP)	MAINT. POS. STOP-UP	O'TRAVEL RAISED	DIRECTION OF TRAVEL TO TRIP SWITCH
LSA	STOP MOTOR, OVER TRAVEL LOWERED											DOWN
LSB	STOP MOTOR, GATE LOWERED											DOWN
LSC	STOP MOTOR (UP) START MOTOR (DN)											UP
LSD	START MOTOR (UP) STOP MOTOR (DN)											UP
LSE	STOP MOTOR (UP) START MOTOR (DN)											UP
LSF	START MOTOR (UP) STOP MOTOR (DN)											UP
LSG	STOP MOTOR (UP)											UP
LSH	STOP MOTOR, OVER TRAVEL RAISED											UP

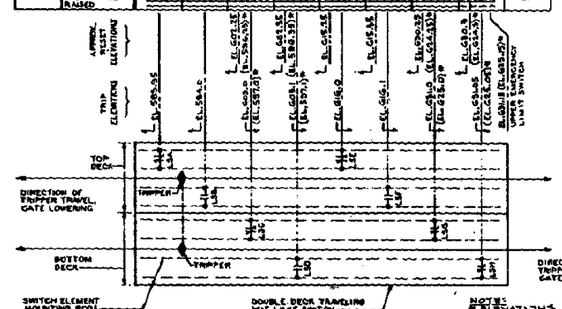

ELEMENTS SHOWN AS ACTUATED WITH GATE IN NORMAL LOWERED POSITION

ARRANGEMENT OF ELEMENTS
LIMIT SWITCHES "LS"

NOTE: ELEVATIONS MARKED WITH ASTERISKS REPRESENT UPSTREAM LEAF LOCATIONS IN THE INTERMEDIATE, MAINTENANCE AND "OVERTRAVEL" RAISED" GATE POSITIONS.

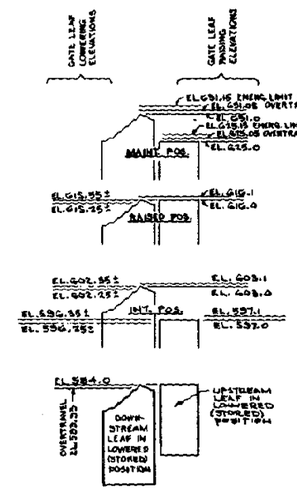

POSITION OF GATE LEAVES FOR CONTROL CIRCUIT OPERATION
EACH LEAF OPERATES INDEPENDENTLY

ELECTRICAL SYMBOLS

- P.B., NOR. CONTACT, N.O.
- P.B., NOR. CONTACT, N.C.
- MAINT. CONTACT, SPST
- LIMIT OR FLOAT SW. CONTACT, N.O.
- LIMIT OR FLOAT SW. CONTACT, N.C.
- N.O. CONTACT
- N.C. CONTACT
- CONTACTOR OR RELAY COIL
- AIR CKT. BREAKER WITH THERMAL MAGNETIC TRIP
- BLOWOUT COIL
- TERMINAL BLOCKS
- MECHANICAL INTERLOCK
- FUSE
- MOLDED CONNECTORS (MALE & FEMALE) NO. OF POLES AS REQUIRED
- SAME CONDUCTOR, END TAPED

DESCRIPTION OF CONTROL SYSTEM

1. SCHEME OF OPERATION

A. GENERAL. THE SCHEME OF OPERATION OF THE CONTROL SYSTEM FOR EACH LEAF OF THE EMERGENCY GATE SHALL BE AS INDICATED BY THE BASIC WIRING DIAGRAM AND AS SPECIFIED BELOW.

B. CONTROL POINTS. THE OPERATION OF THE GATE LEAF HOIST MOTOR SHALL BE CONTROLLED BY:

(1) A PUSH BUTTON TYPE CONTROL STATION ON EACH LOCK WALL, NEAR THE EMERGENCY GATE LEAF, WITH MOMENTARY CONTACTS DESIGNATED "RAISE", "LOWER" AND "STOP".

(2) A PUSH BUTTON TYPE CONTROL STATION, LOCATED ON THE DOOR OF THE CONTROL CABINET, WITH MOMENTARY CONTACTS DESIGNATED "BACKOUT RAISE OVERTRAVEL" AND "BACKOUT LOWER OVERTRAVEL".

C. OPERATING FEATURES.

(1) MOMENTARY ACTUATION OF THE "RAISE" AND "LOWER" CONTACTS OF EITHER OF THE CONTROL STATIONS SHALL PROVIDE SEAL-IN OPERATION OF THE CONTROL CIRCUIT.

(2) LIMIT SWITCHES WITH CONTACTS ACTUATED BY THE MOVEMENT OF THE OPERATING ELEMENTS OF THE GATE HOIST MACHINE, SHALL AUTOMATICALLY CONTROL, AS INDICATED, THE SPEED AND THE DIRECTION OF OPERATIONS INITIATED MANUALLY AT A CONTROL STATION.

(3) MOMENTARY ACTUATION OF THE "STOP" CONTACT OF EITHER OF THE CONTROL STATIONS DURING ANY OPERATION SHALL DE-ENERGIZE THE CONTROL CIRCUIT, STOP THE MOTOR AND SET THE BRAKE.

2. SEQUENCE OF OPERATION

A. RAISING. WHEN THE "RAISE" CONTACT OF EITHER CONTROL STATION IS ACTUATED, HELD MOMENTARILY AND RELEASED, THE HOIST MOTOR SHALL START AND RUN UNTIL THE GATE HAS RAISED APPROXIMATELY TWENTY FEET TO THE INTERMEDIATE POSITION WHERE THE LIMIT SWITCH SHALL AUTOMATICALLY DE-ENERGIZE THE CONTROL CIRCUIT, STOP THE MOTOR AND SET THE BRAKE. IF THE GATE IS AT THE INTERMEDIATE POSITION AND THE "RAISE" CONTACT IS PURSUED HELD UNTIL THE GATE HAS RAISED AT LEAST ONE TENTH OF A FOOT AND RELEASED, THE GATE MOTOR SHALL CONTINUE TO RUN UNTIL THE GATE REACHES THE RAISED POSITION WHERE THE LIMIT SWITCH SHALL AUTOMATICALLY DE-ENERGIZE THE CONTROL CIRCUIT, STOP THE MOTOR AND SET THE BRAKE. BY THE SAME MEANS THE GATE MAY BE MOVED TO THE MAINTENANCE POSITION.

B. LOWERING. WHEN THE "LOWER" CONTACT OF EITHER CONTROL STATION IS ACTUATED, HELD AND RELEASED, THE HOIST MOTOR SHALL START AND RUN UNTIL THE GATE HAS LOWERED THE RAISED POSITION WHERE THE LIMIT SWITCH SHALL AUTOMATICALLY DE-ENERGIZE THE CONTROL CIRCUIT, STOP THE MOTOR AND SET THE BRAKE. FROM THE RAISED POSITION, DEPRESSING THE "LOWER" CONTACT UNTIL THE GATE HAS LOWERED AT LEAST ONE TENTH OF A FOOT SHALL ALLOW THE GATE TO LOWER TO THE INTERMEDIATE POSITION WHERE THE LIMIT SWITCH SHALL AUTOMATICALLY DE-ENERGIZE THE CONTROL CIRCUIT, STOP THE MOTOR AND SET THE BRAKE. BY THE SAME MEANS THE GATE MAY BE MOVED TO THE LOWERED POSITION.

C. BACKOUT FROM OVERTRAVEL. IF, DURING NORMAL OPERATION, THE GATE SHOULD FAIL TO STOP AFTER REACHING THE MAINTENANCE OR LOWERED POSITION, THE OVERTRAVEL LIMIT SWITCH CONTACTS SHALL STOP THE HOIST MOTOR BY DE-ENERGIZING THE "MAIN" OR "LINE" CONTACTOR OF THE CONTROLLER. MOREOVER, IF THE GATE SHOULD FAIL TO STOP UPON REACHING THE OVERTRAVEL RAISED POSITION, THE UPPER DE-ENERGIZING LIMIT SWITCH CONTACTS SHALL STOP THE HOIST MOTOR BY DE-ENERGIZING THE "MAIN" OR "LINE" CONTACTOR. TO OPERATE THE GATE AFTER AN OVERTRAVEL, THE APPROPRIATE BACKOUT SWITCH CONTACT SHALL BE HELD CLOSED TO PERMIT OPERATION OF THE GATE ONLY IN THE DIRECTION AWAY FROM THE OVERTRAVEL POSITION BY MEANS OF EITHER THE "RAISE" OR "LOWER" PUSHBUTTON ON EITHER CONTROL STATION.

D. BACKOUT FROM ROPE OVERLOAD. IF, DURING NORMAL RAISING OPERATION, EXCESSIVE ROPE TENSION IS REACHED, FORCE CONTROL SWITCH CONTACTS SHALL STOP THE HOIST MOTOR BY DE-ENERGIZING THE "RAISE" CONTACTOR. IF THE "RAISE" CONTACTOR SHOULD FAIL TO OPEN, ROPE TENSION WILL INCREASE FURTHER UNTIL THE OTHER FORCE CONTROL SWITCH CONTACTS SHALL STOP THE HOIST MOTOR BY DE-ENERGIZING THE "MAIN" CONTACTOR. TO LOWER THE GATE AFTER ROPE OVERLOAD THE "BACKOUT RAISE OVERTRAVEL" PUSHBUTTON SHALL BE HELD CLOSED TO PERMIT LOWERING OF THE GATE BY MEANS OF THE "LOWER" PUSHBUTTON ON EITHER CONTROL STATION.

LOCK GATES
VERTICAL-LIFT GATE
ELECTRICAL SYSTEMS
CONTROL SCHEMATIC
EMERGENCY TYPE

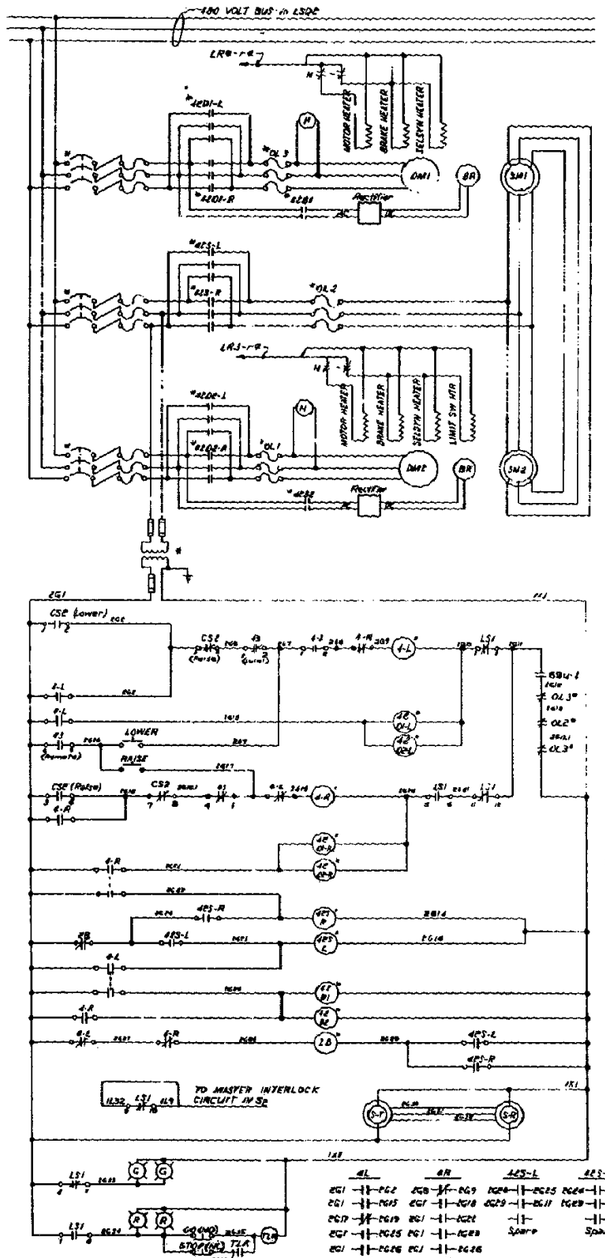

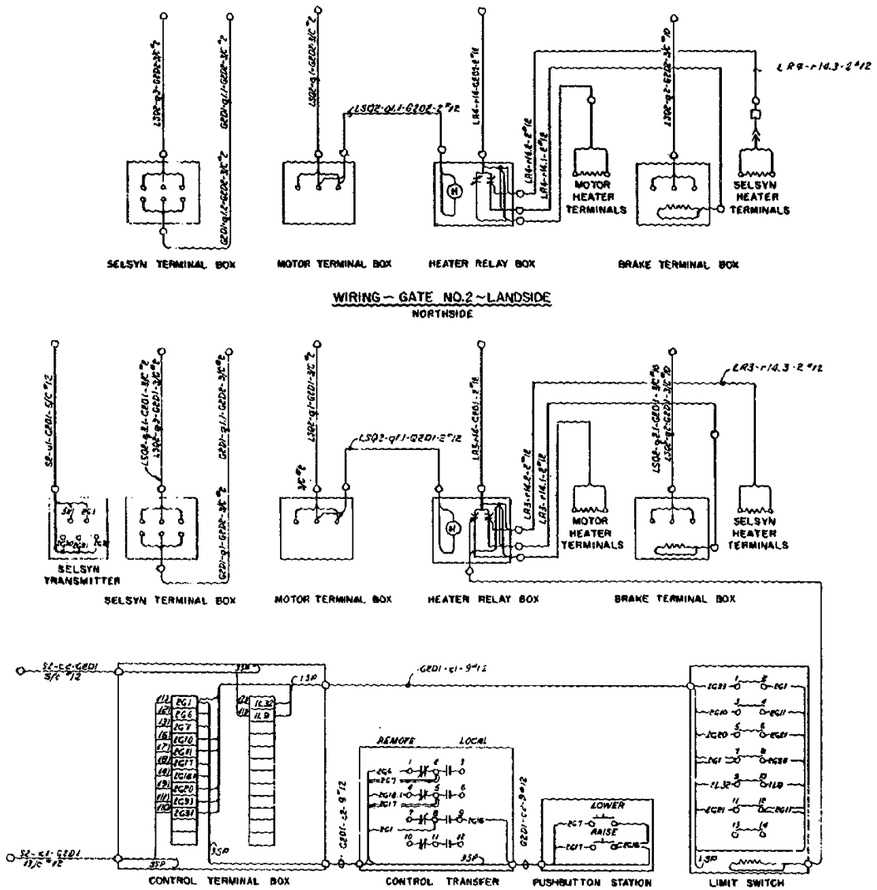

DESCRIPTION OF CONTROL SYSTEM

1. SCHEME OF OPERATION - THE SCHEME OF OPERATION SHALL BE AS INDICATED BY THE SCHEMATIC CONTROL DIAGRAM AND AS DESCRIBED BELOW.
2. CONTROL POINTS - THE OPERATION OF THE GATE SHALL BE CONTROLLED BY A CONTROL SWITCH CSE OF THE RAMO RETURN CONTACT TYPE ON CONTROL STAND NO. 2. THE SWITCH SHALL HAVE TWO POSITIONS DESIGNATED "RAISE" AND "LOWER". THE GATE SHALL ALSO BE CONTROLLED FROM THE SOUTH GATE MACHINERY ROOM BY MEANS OF A TWO POSITION PUSH-BUTTON STATION WITH MOMENTARY CONTACTS DESIGNATED "RAISE" AND "LOWER". THE CONTROL SHALL BE TRANSFERRED FROM ONE POINT TO THE OTHER BY MEANS OF TRANSFER SWITCH 43, ALSO IN THE SOUTH MACHINERY ROOM.
3. CONTROL SEQUENCE IN LOWERING GATE - OVERLOAD AND INTERLOCK RELAYS ARE NORMALLY CLOSED. THE CONTROL SWITCH CSE IS TURNED MOMENTARILY TO THE "LOWER" POSITION. CLOSURE OF THE CONTROL SWITCH CSE CONTACTS ENERGIZES CONTROL RELAY 44, RELAY 44 CONTACTS CLOSE TO ENERGIZE, 2B CONTACTOR 4DS-L FOR THE POWER SELSYN MOTORS 2B THE DRIVE MOTOR MAKE CONTACTORS RELEASING THE BRAKES AND 1B THE DRIVE MOTORS CONTROLLERS 4DS-L AND 4DS-L.
4. CONTROL SEQUENCE IN STOPPING GATE - GATE MOVEMENT IS HALTED EITHER BY PULLING THE CONTROL SWITCH CSE WHICH OPENS THE CIRCUIT OR BY THE LIMIT SWITCH LS1 WHICH OPENS AT A PREDETERMINED LIMIT OF TRAVEL AND DE-ENERGIZES THE CONTROL CIRCUIT STOPPING THE DRIVE MOTORS AND SETTING THE BRAKES. WHEN 4L IS DE-ENERGIZED, THE "RELAY DELAY 8B IS ENERGIZED AND THROUGH 8 TIME DELAY OPENING CONTACTS MAINTAINS THE POWER SUPPLY TO THE SELSYN MOTORS FOR A SHORT TIME. 2B CONTACTS THEN OPEN AND DE-ENERGIZE CONTACTOR 4DS-L.
5. CONTROL SEQUENCE IN RAISING GATE - THE SEQUENCE IS SIMILAR TO THAT FOLLOWED IN LOWERING THE GATE EXCEPT THAT "RAISE" DEVICES OPERATE INSTEAD OF "LOWER" DEVICES.
6. CONTROL SEQUENCE IN STOPPING GATE - THE SEQUENCE IS SIMILAR TO STOPPING THE GATE DESCRIBED ABOVE EXCEPT THAT "RAISE" DEVICES OPERATE INSTEAD OF "LOWER" DEVICES.
7. THE CONTROLS ARE SHOWN FOR REMOTE OPERATION AND GATE RAISED.

DEVICE DESIGNATIONS

4-L	CONTROL RELAY - LOWER
4-R	CONTROL RELAY - RAISE
4DS-L, 4DS-L	DRIVE MOTOR CONTROLLER - LOWER
4DS-R, 4DS-R	DRIVE MOTOR CONTROLLER - RAISE
4DS-L	POWER SELSYN LINE CONTACTORS - LOWER.
4DS-R	POWER SELSYN LINE CONTACTORS - RAISE
43	CONTROL TRANSFER SWITCH
8B	TIME DELAY OPENING RELAY
8R	MAKE
CS-2	CONTROL SWITCH - RAMO NO. 2
DM	DRIVE MOTOR
GL	GREEN LIGHT
H	HEATER RELAY
INT 1	INTERLOCK RELAY
LSQR	CONTROL CENTER
LS	LIMIT SWITCH
OL	OVERLOAD RELAYS
RL	RED LIGHT
SM	POWER SELSYN MOTOR
TB	TERMINAL BOX
SY	SELSYN TRANSMITTER
SR	SELSYN RECEIVER
MR	MAKE CONTACTOR
SB	SELECTOR SWITCH, CONTROL-GRAND (SEE SHT. 114)
4-B	INTERLOCK RELAY
MR	MAKE CONTACTOR
TLR	TRAFFIC LIGHT RELAY

* Located in LSQR

CONTROL TRANSFER SWITCH 43

CONTACT	LOCAL	REMOTE
1-2		X
2-3	X	
4-5		X
5-6	X	
8-9	X	

LIMIT SWITCH LS1

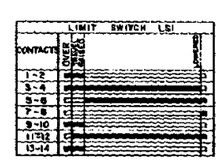

CONTROL SWITCH OPERATION
CSE-GATE 2
(SPRING RETURN TO NORMAL)

CONTACT	LOWER	NORMAL	RAISE	PULL TO STOP
1-2	X			
3-4			X	
5-6	X	X	X	
7-8	X	X	X	

Contact contacts no spring return to normal.

LOCK GATES
TAINTER TYPE
CONTROL DIAGRAM

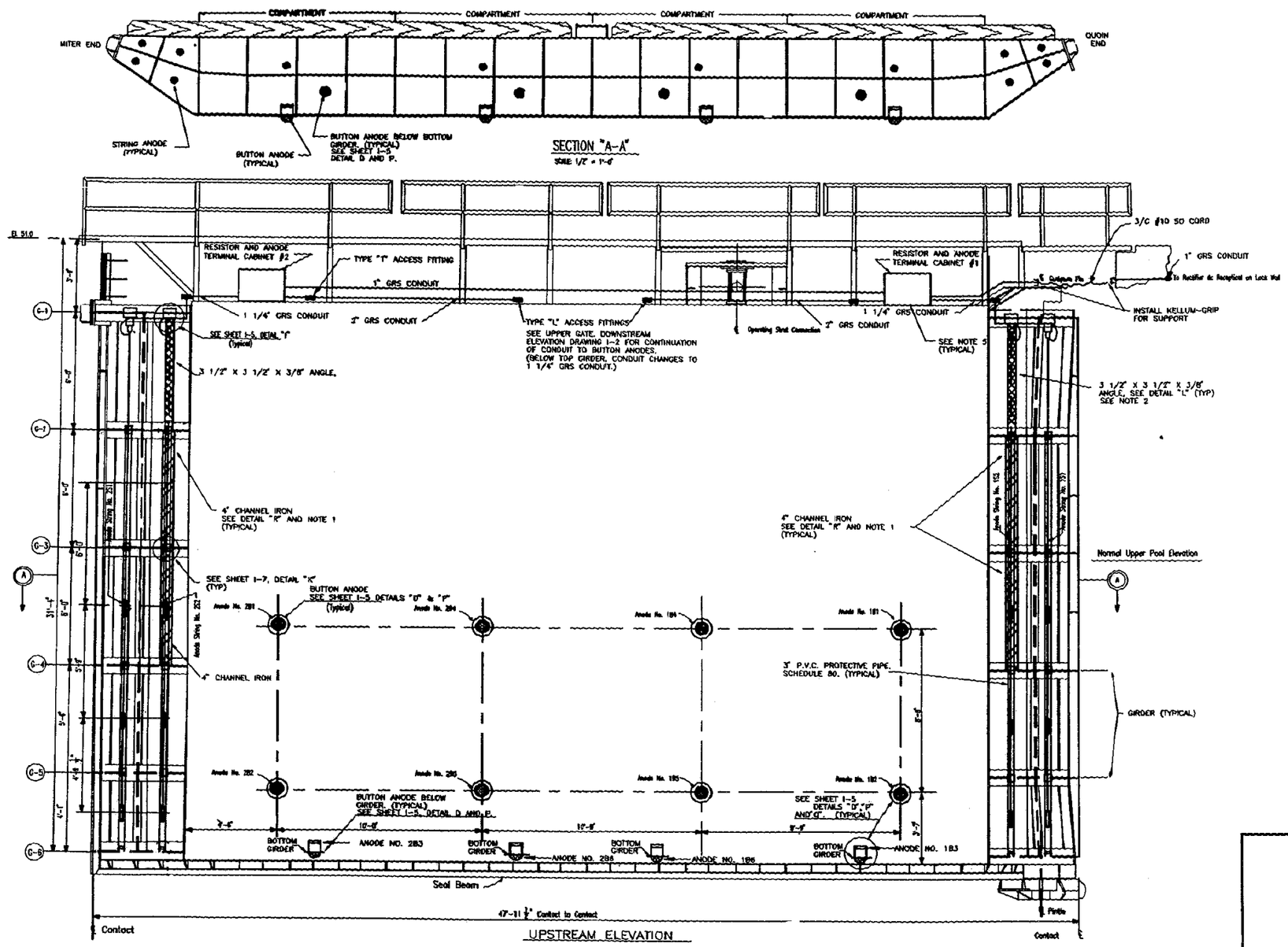

NOTES:

1. FOR THE FIRST COMPARTMENTS LOCATED ABOVE AND BELOW THE NORMAL UPPER POOL ELEVATION AS SHOWN ON "UPSTREAM ELEVATION" VIEW, INSTALL FOUR-INCH CHANNEL IRONS IN FRONT OF ANODE STRING NOS. 152 AND 252. WELD CHANNEL TO INSIDE OF GIRDER FLANGE.

2. FOR ANODE STRING NOS. 152 AND 252, INSTALL ANGLE IRON FROM THE UNDERSIDE OF THE TOP GIRDER TO THE TOPSIDE OF THE NEXT GIRDER BELOW NORMAL POOL ELEVATION (G-4). FOR CLARITY, ANGLE IRONS ARE ONLY SHOWN IN THE TOPMOST COMPARTMENTS ON THE "UPTREAM ELEVATION" VIEW.

3. FOR 1-1/4" CONDUIT RUNS FOR BUTTON ANODES, REFER TO SHEET I-5, DETAIL "C" AND "P". A MINIMUM OF 2 CLAMPS SHALL BE INSTALLED BETWEEN EACH GIRDER.

4. OFFSET ANGLE IRONS IN TOPMOST COMPARTMENT IN THE FIELD IF NECESSARY TO AVOID CONFLICT WITH CLEVIS AND INSULATOR. THIS NOTE ALSO APPLIES TO COMPARTMENTS WITH ONLY CABLE AND PVC.

5. IF CONDUITS ENTER RESISTOR AND ANODE TERMINAL CABINETS FROM BOTTOM, TYPE "L" ACCESS FITTINGS MAY BE USED IN LIEU OF 90-DEGREE BENDS.

DESIGNERS INSTRUCTIONS

1. DIMENSIONS AND GIRDER NUMBERS (G-1, G-2, ETC.) FOR THE STRUCTURE SHOWN ON THIS STANDARD DRAWING ARE FOR REFERENCE AND INFORMATION ONLY TO ASSIST THE DESIGNERS. DIMENSIONS WILL VARY FROM STRUCTURE TO STRUCTURE DEPENDING UPON THE WIDTH AND LIFT OF THE NAVIGATION LOCK; THEREFORE, THE DESIGNER IS RESPONSIBLE FOR PROVIDING THE NECESSARY ACTUAL STRUCTURAL DIMENSIONS.

2. THE GATE LEAF CONFIGURATIONS (WIDTH, LIFT, ETC.) OF THE UPSTREAM OR DOWNSTREAM FACE WILL DETERMINE THE GIRDER NUMBERS AND DIMENSIONS.

3. DIMENSIONS FOR ANODE SPACINGS SHOULD ALSO BE BASED UPON CALCULATIONS TO BE MADE BY THE DESIGNER. THROWING POWER OF THE ANODES MUST BE CONSIDERED TO INSURE MEETING THE MADE PROTECTION CRITERIA OF A MINIMUM OF MINUS 850 MILLIVOLTS (IR COMPENSATED) AND 100 MILLIVOLTS POLARIZATION DECAY.

GUIDE PLAN
LOCK CATHODIC
PROTECTION
UPPER MITER GATE
UPSTREAM ELEVATION

(SHEET I-1) PLATE B-75

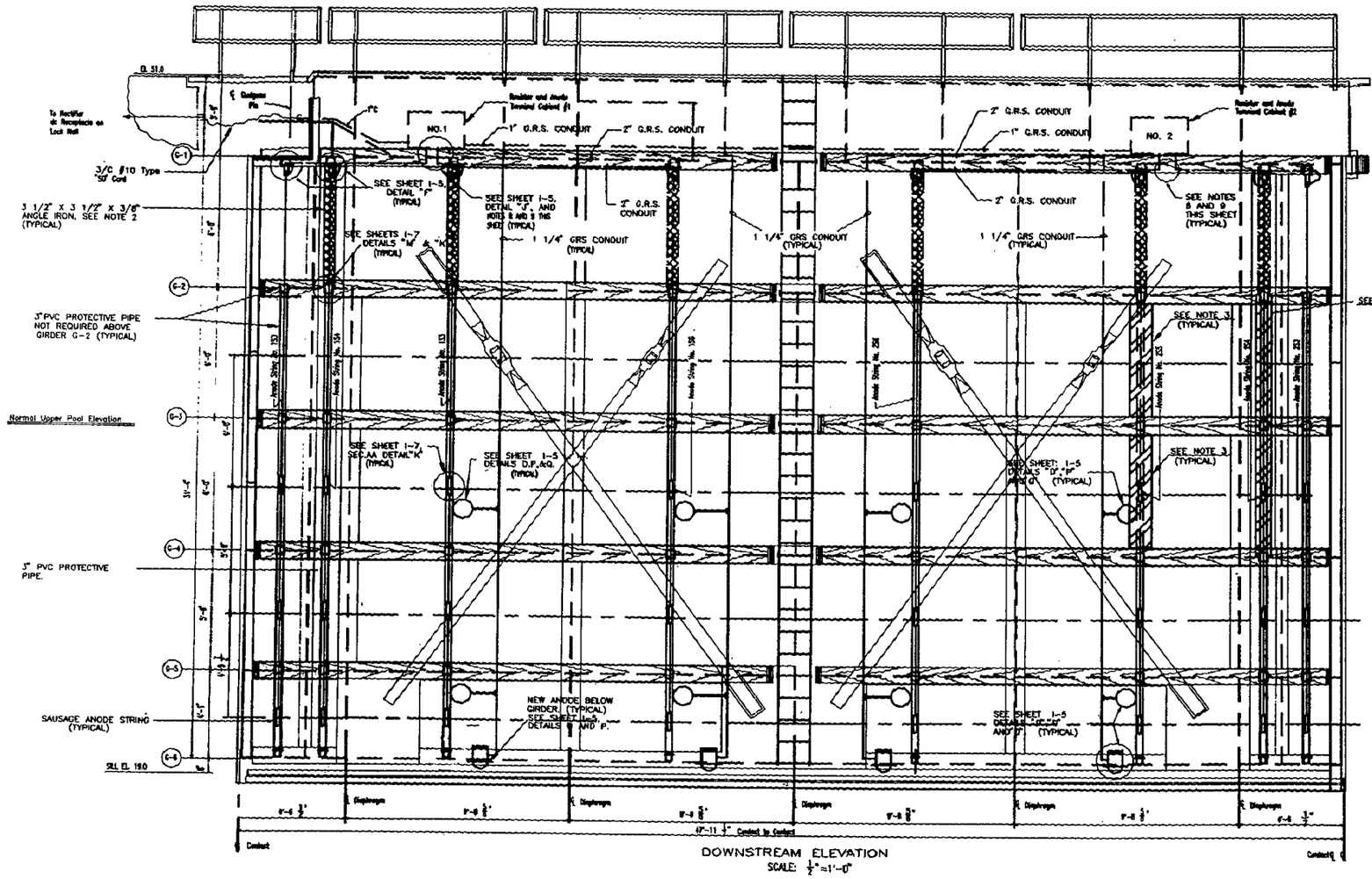

DOWNSTREAM ELEVATION
SCALE: 1/2" = 1'-0"

NOTES:

1. FOR THE FIRST COMPARTMENTS LOCATED ABOVE AND BELOW THE NORMAL UPPER POOL ELEVATION AS SHOWN ON "DOWNSTREAM ELEVATION" VIEW, INSTALL FOUR-INCH CHANNEL IRONS IN FRONT OF ANODE STRING NOS. 1S4 AND 2S4. FOR CLARITY, ONLY FOUR-INCH CHANNEL IRONS FOR ONE (1) STRING ANODE ARE SHOWN IN THIS VIEW. WELD CHANNEL TO INSIDE OF GIRDER FLANGE.

2. FOR ANODE STRING NOS. 1S4, 1S5, 1S6, 2S4, 2S5, AND 2S6, INSTALL ANGLE IRON FROM THE UNDERSIDE OF THE TOP GIRDER TO THE TOPSIDE OF THE NEXT GIRDER BELOW NORMAL POOL ELEVATION (G-4).

3. FOR ANODE STRING NOS. 1S5, 1S6, 2S5, AND 2S6, INSTALL SIX-INCH CHANNEL IRONS IN FRONT OF STRING ANODES FOR THE FIRST COMPARTMENT LOCATED ABOVE AND BELOW THE NORMAL UPPER POOL ELEVATION. WELD CHANNEL TO INSIDE OF GIRDER FLANGE. CHANNEL IRONS FOR ONE (1) STRING ANODE ARE SHOWN. THE REMAINING CHANNEL IRONS ARE NOT SHOWN ON THIS DRAWING FOR CLARITY.

4. FOR 1-1/4" CONDUIT RUNS FOR BUTTON ANODES, REFER TO SHEET 1-5, DETAILS "C" AND "P". A MINIMUM OF 2 CLAMPS SHALL BE INSTALLED BETWEEN EACH GIRDER.

5. OFFSET ANGLE IRONS IN TOP MOST COMPARTMENTS IN THE FIELD IF NECESSARY TO AVOID CONFLICT WITH CLEVIS AND INSULATOR. THIS NOTE ALSO APPLIES TO COMPARTMENTS WITH ONLY CABLE AND PVC.

6. SEE SHEET 1-5, DETAIL "Q" FOR TYPICAL GATE SECTION VIEW.

7. ANODES ARE TO BE NUMBERED IN SEQUENCE AS SHOWN.

8. ALL CONDUIT PENETRATIONS OF GIRDER G-1 SHALL BE WATERTIGHT IN ACCORDANCE WITH SHEET 1-5, DETAIL J.

9. TYPE "L" ACCESS FITTINGS MAY BE USED IN LIEU OF 90 DEGREE BENDS FOR ENTRY INTO RESISTOR AND ANODE TERMINAL CABINETS.

DESIGNERS INSTRUCTIONS

1. DIMENSIONS AND GIRDER NUMBERS (G-1, G-2, ETC.) FOR THE STRUCTURE SHOWN ON THIS "STANDARD DRAWING" ARE FOR REFERENCE AND INFORMATION ONLY ABOUT THE DESIGNER. DIMENSIONS WILL VARY FROM STRUCTURE TO STRUCTURE DEPENDING UPON THE WIDTH AND LIFT OF THE NAVIGATION LOCK; THEREFORE, THE DESIGNER IS RESPONSIBLE FOR PROVIDING THE NECESSARY ACTUAL, STRUCTURAL DIMENSIONS.

2. THE GATE LEAF CONFIGURATIONS (WIDTH, LIFT, ETC.) OF THE UPSTREAM OR DOWNSTREAM FACE WILL DETERMINE THE GIRDER NUMBERS AND DIMENSIONS.

3. DIMENSIONS FOR ANODE SPACING SHOULD ALSO BE BASED UPON CALCULATIONS TO BE MADE BY THE DESIGNER. THROWING POWER OF THE ANODES MUST BE CONSIDERED TO ENSURE MEETING THE NACE PROTECTION CRITERIA OF A MINIMUM OF MINUS 850 MILLIVOLTS (IR COMPENSATED) AND 100 MILLIVOLTS POLARIZATION DECAY.

SCALE: 1/2" = 1' - 0"
12" 0' 1' 2' 3' 4' 5'

GUIDE PLAN
LOCK CATHODIC
PROTECTION
UPPER MITER GATE
DOWNSTREAM ELEVATION

(SHEET 1-2) PLATE B-76

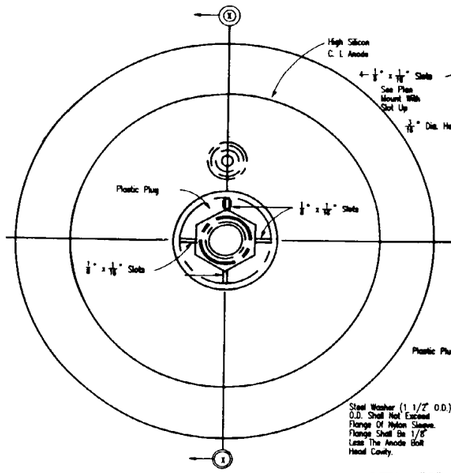

PLAN

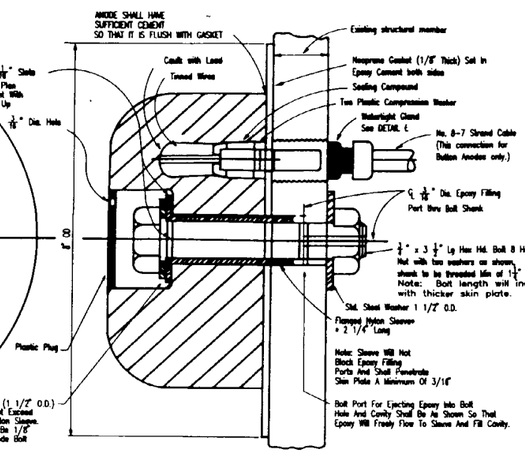

DETAIL "D"
6" DIA. BUTTON ANODE
NOT TO SCALE

SECTION X-X

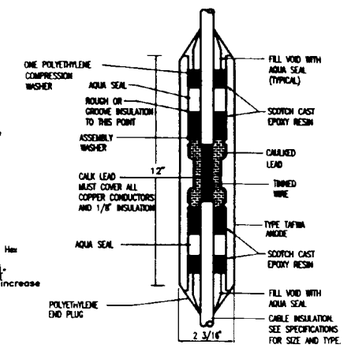

DETAIL "F"
TYPICAL ANODE ASSEMBLY
NOT TO SCALE

NOTE: DETAIL "F" IS SHOWN FOR ASSEMBLY REQUIREMENTS. STRING ANODES WILL BE FACTORY ASSEMBLED.

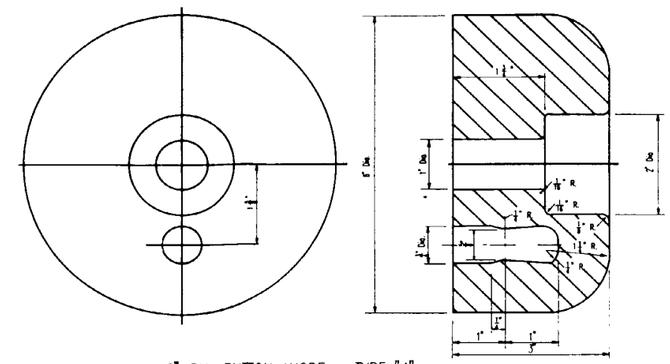

6" DIA. BUTTON ANODE - TYPE "A"

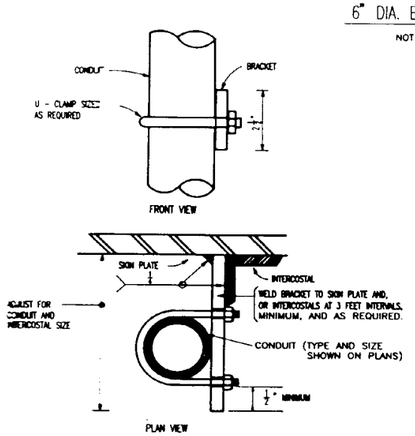

DETAIL "C"
CONDUIT CLAMP
NTS

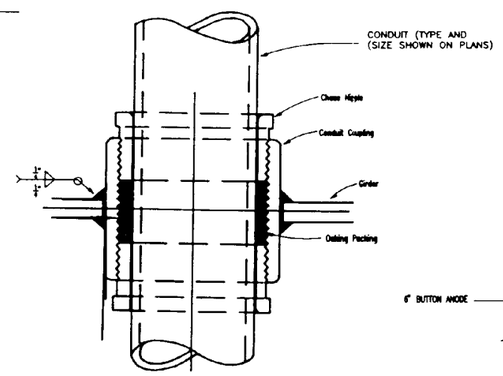

DETAIL "J"
WATERTIGHT CONDUIT GIRDER PENETRATION
NO SCALE

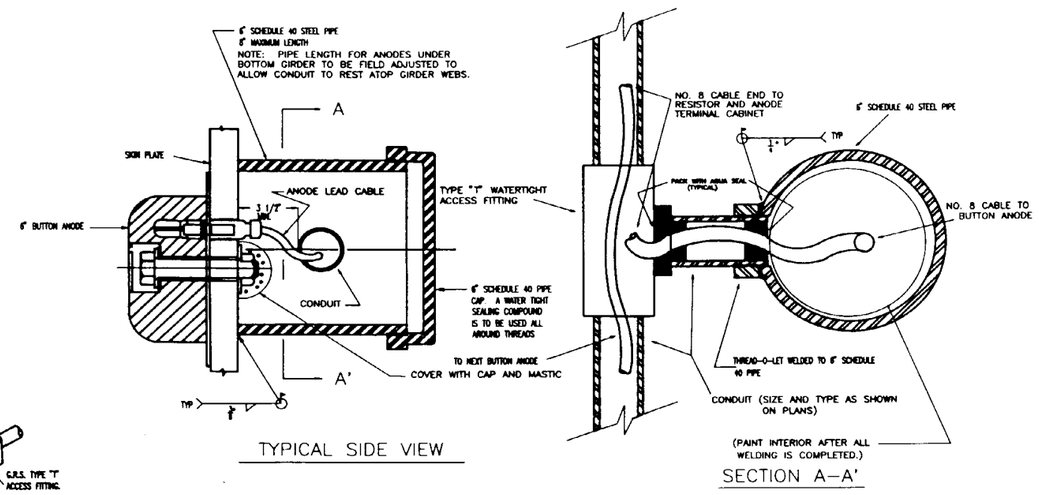

TYPICAL SIDE VIEW

SECTION A-A'

DETAIL "P"
BUTTON ANODE CABLING PROTECTION
N.T.S

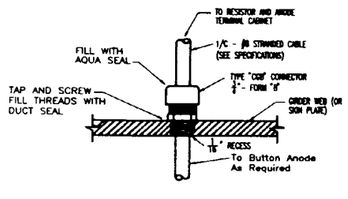

DETAIL "E"
WATERTIGHT GLAND
(TYPICAL)
NO SCALE

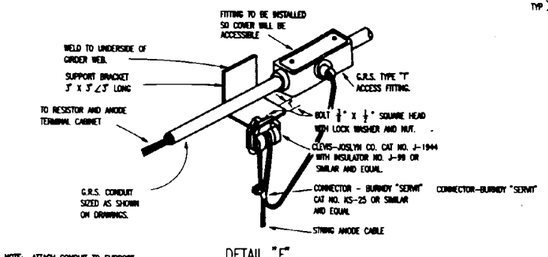

NOTE: ATTACH CONDUIT TO SUPPORT BRACKET IN ACCORDANCE WITH DETAIL "C", THIS SHEET.

DETAIL "F"
CABLE SUSPENSION
NOT TO SCALE

GUIDE PLAN
LOCK CATHODIC
PROTECTION
DETAILS

(SHEET I-5) PLATE B-77

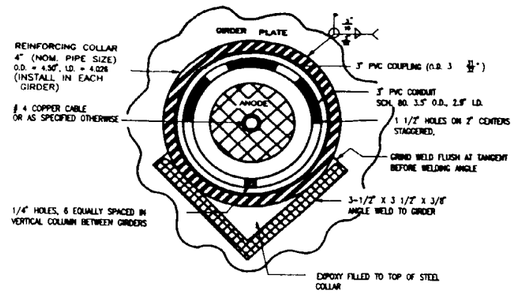

SECTION "A-A"

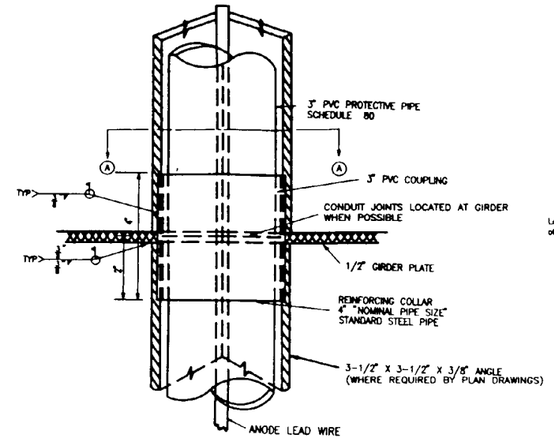

DETAIL "K"
CONDUIT GIRDER PENETRATION FOR STRING ANODES
NOT TO SCALE

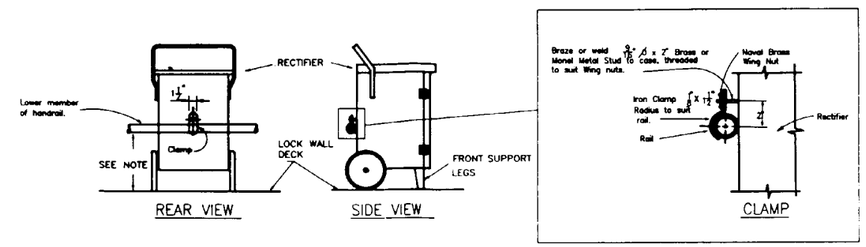

NOTE:
ADJUST CLAMP MOUNTING LOCATION ON RECTIFIER CABINET AS REQUIRED TO FIT HEIGHT ABOVE THE LOCK WALL DECK OF THE LOWER MEMBER OF THE HANDRAIL.

RECTIFIER CABINET
NOT TO SCALE
(TYPICAL)

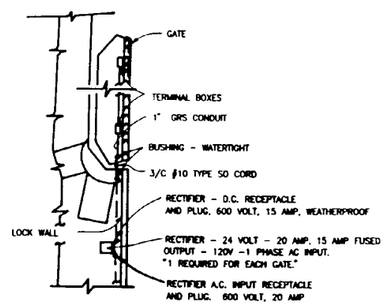

TYPICAL ELECTRICAL CONNECTION
AT TOP OF GATE
N.T.S.

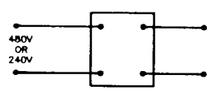

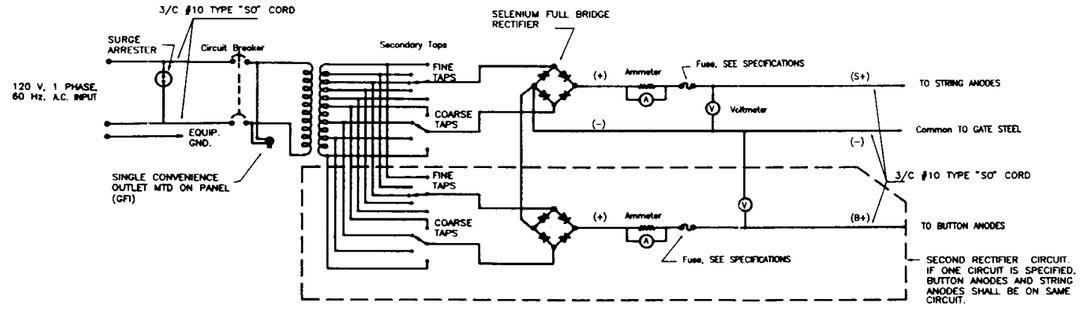

TYPICAL RECTIFIER SCHEMATIC WIRING DIAGRAM
NOT TO SCALE

NOTE: TWO SEPARATE TRANSFORMERS OR ONE TRANSFORMER WITH TWO SECONDARY WINDINGS MAY BE UTILIZED IN LIEU OF ABOVE TYPICAL. IF TWO TRANSFORMERS ARE USED, THEN EACH SHALL HAVE ITS OWN BREAKER. ONE AMMETER AND ONE VOLTMETER WITH SELECTOR SWITCHES TO PROVIDE INDIVIDUAL READING OF EITHER THE STRING ANODE CIRCUIT OR THE BUTTON ANODE CIRCUIT MAY BE USED IN LIEU OF TWO OF EACH METER AS SHOWN ABOVE.

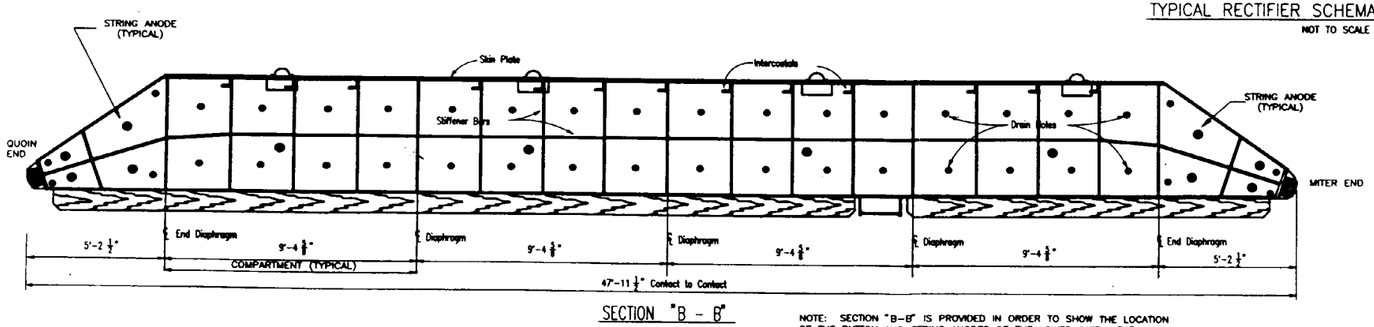

SECTION "B - B"
SCALE: 1/2"=1'-0"

NOTE: SECTION "B-B" IS PROVIDED IN ORDER TO SHOW THE LOCATION OF THE BUTTON AND STRING ANODES OF THE LOWER GATE. THE LOCATION OF THE BUTTON ANODES TO BE INSTALLED ON THE UNDERSIDE OF THE BOTTOM GIRDER ARE NOT SHOWN ON THIS SECTION VIEW; REFER TO DRAWING I-1 FOR TYPICAL LOCATIONS.

GUIDE PLAN
LOCK CATHODIC
PROTECTION
DETAILS

(SHEET I-7) PLATE B-78

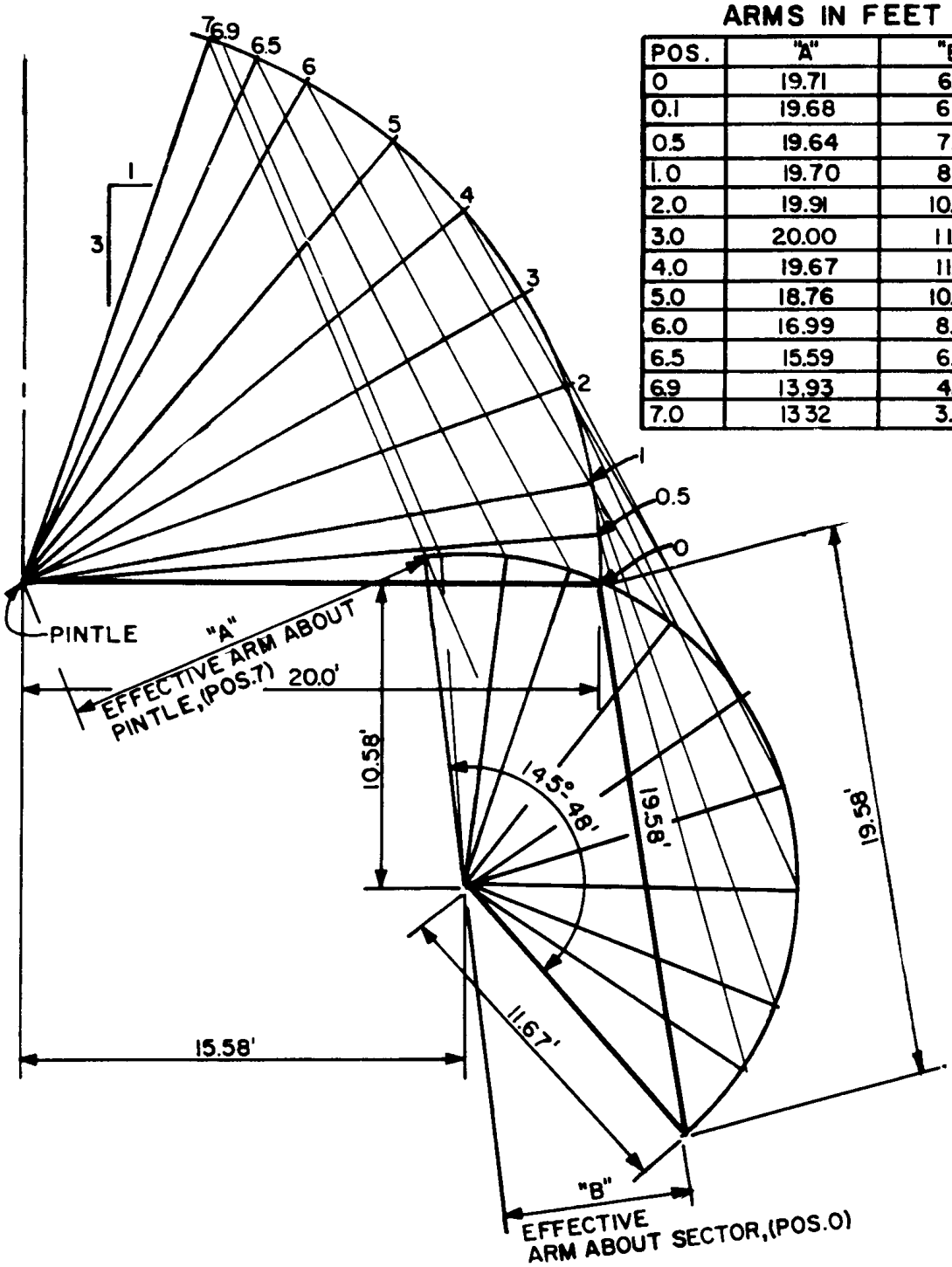

EFFECTIVE MOMENT ARMS IN FEET

POS.	"A"	"B"
0	19.71	6.16
0.1	19.68	6.46
0.5	19.64	7.57
1.0	19.70	8.73
2.0	19.91	10.48
3.0	20.00	11.47
4.0	19.67	11.62
5.0	18.76	10.80
6.0	16.99	8.63
6.5	15.59	6.70
6.9	13.93	4.19
7.0	13.32	3.20

KINEMATICS
OHIO RIVER TYPE LINKAGE

PLATE B-79
(SHEET 1 OF 12)

ALL INFORMATION IS THE SAME AS THAT FOR ALICEVILLE LOCK AND DAM

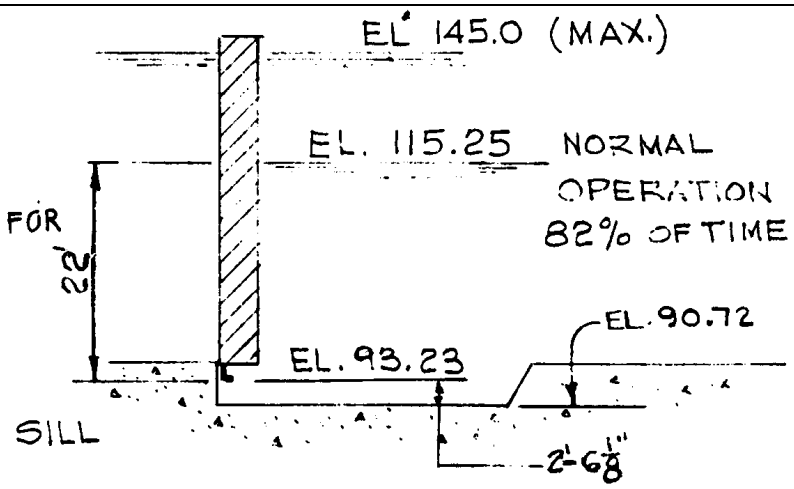

OPENING OPERATION (NORMAL OPERATION 82 % TIME)

OPENING TIME 90 SEC ($1\frac{1}{2}$ MIN)
UNDERGATE CLEARANCE = $2'-6\frac{1}{8}''$
SUBMG (ASSUMED) = 22 FT
CYLINDER DIAM = 12" I.D.
ROD DIAM. = 5.0"
STROKE = 12' $8\frac{5}{8}$"
OHIO TYPE LINKAGE

* TECHNICAL REPORT No. 2-651, JUNE '64,

NOMENCLATURE		WES MODEL		PROPOSED LOCK ALICEVILLE		FACTOR
LENGTH GATE	–	3.0	L_1	60.0 FT	$\frac{L_1}{L}$	= 20
SUB MG	S S_2	2.0 * (SEE PLATE B-64) 40.0	S_1	22.0	$\frac{S_1}{S_2}$	= 0.55
TIME	T T_2	20.1 SEC'S * (SEE PLATE B-64) 90.0 SEC	T_1	90.0		
ARC OF TRAVEL GATE	K	71.567	K_1	71.565	$\frac{T_2}{T_A}$	$= \frac{90}{90}$

FACTOR $L_1 \div L = 60 \div 3 = 20$
S_1 = SUB. = 22 FT $S_2 = S\ (L_1 \div L) = 2 \times 20 = 40$
T_1 = 90 SEC ADJ. $T_2 = T\sqrt{L_1/L} = 20.1\sqrt{20} = 20.1 \times 4.47 = 90$

ANGULAR TRAVEL $TA = T_1\left(\frac{K}{K_1}\right) = 90\left(\frac{71.565}{71.565}\right) = 90$

FACTOR $\frac{T_2}{TA} = \frac{90}{90} = 1$

$P_1 = P_0\left(\frac{L1}{L}\right)^4\left(\frac{S_1}{S_2}\right)^{2.1}\left(\frac{T_2}{TA}\right)^{1.0}$ x BOTTOM EFFECT FACTOR

$= P\,(20)^4(0.55)^{2.1}\left(\frac{90}{90}\right)^{1.0} \times 1.23 = P \times 160{,}000 \times 0.285 \times 1 \times 1.23$

$= P \times 45{,}600 \times 1.23$

$= P \times 56{,}100$

EFFECT OF BOTTOM CLEARANCE SEE PLATE 52 OF REPORT 2-651 OPEN'G CYCLE - INCREASE TORQUE 23% FACTOR 1.23, CLOSING CYCLE - INCREASE TORQUE 27% FACTOR 1.27

AVAILABLE TORQUE BASED ON 900-PSI NET CYL. PRESS.

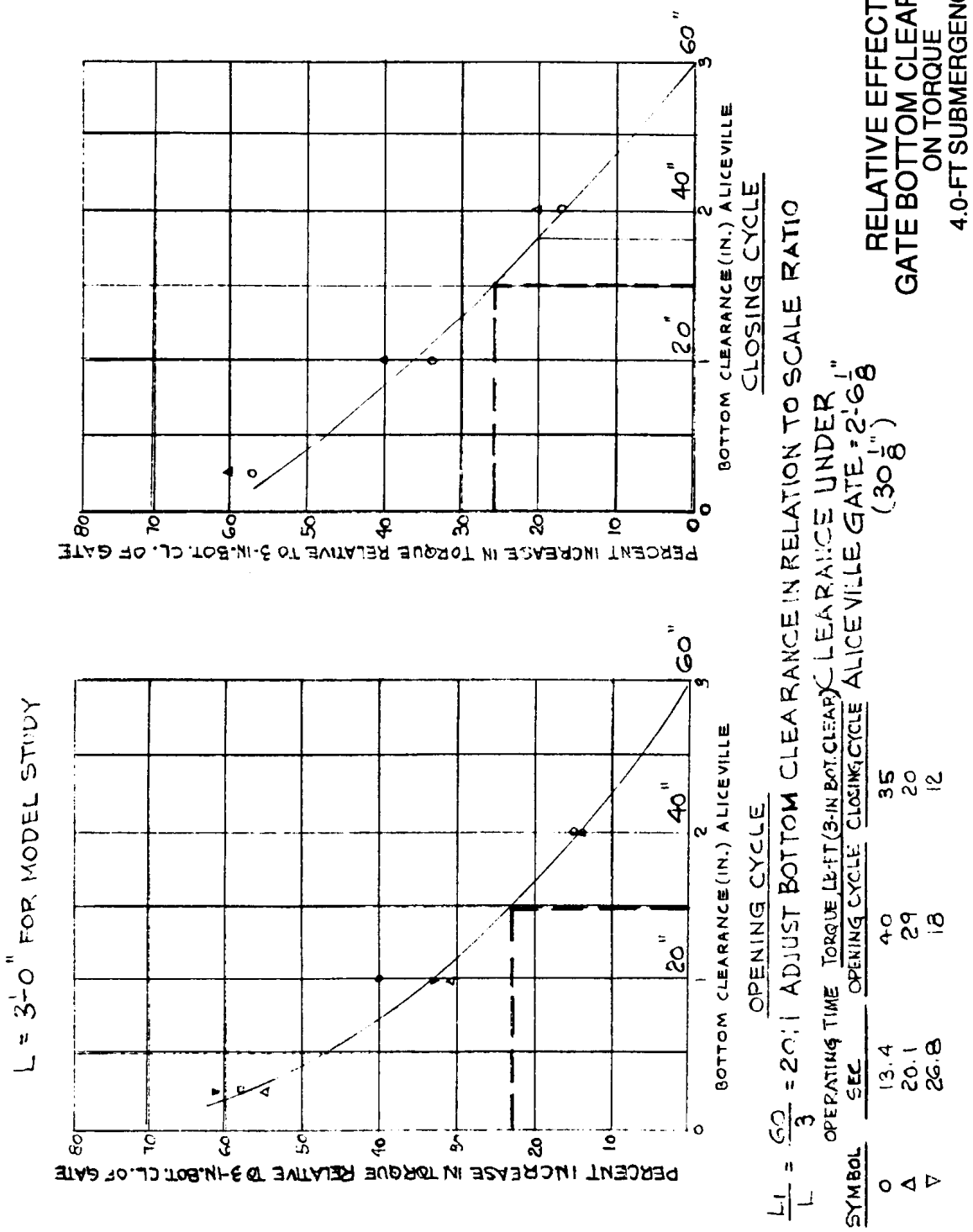

RELATIVE EFFECT OF
GATE BOTTOM CLEARANCE
ON TORQUE
4.0-FT SUBMERGENCE

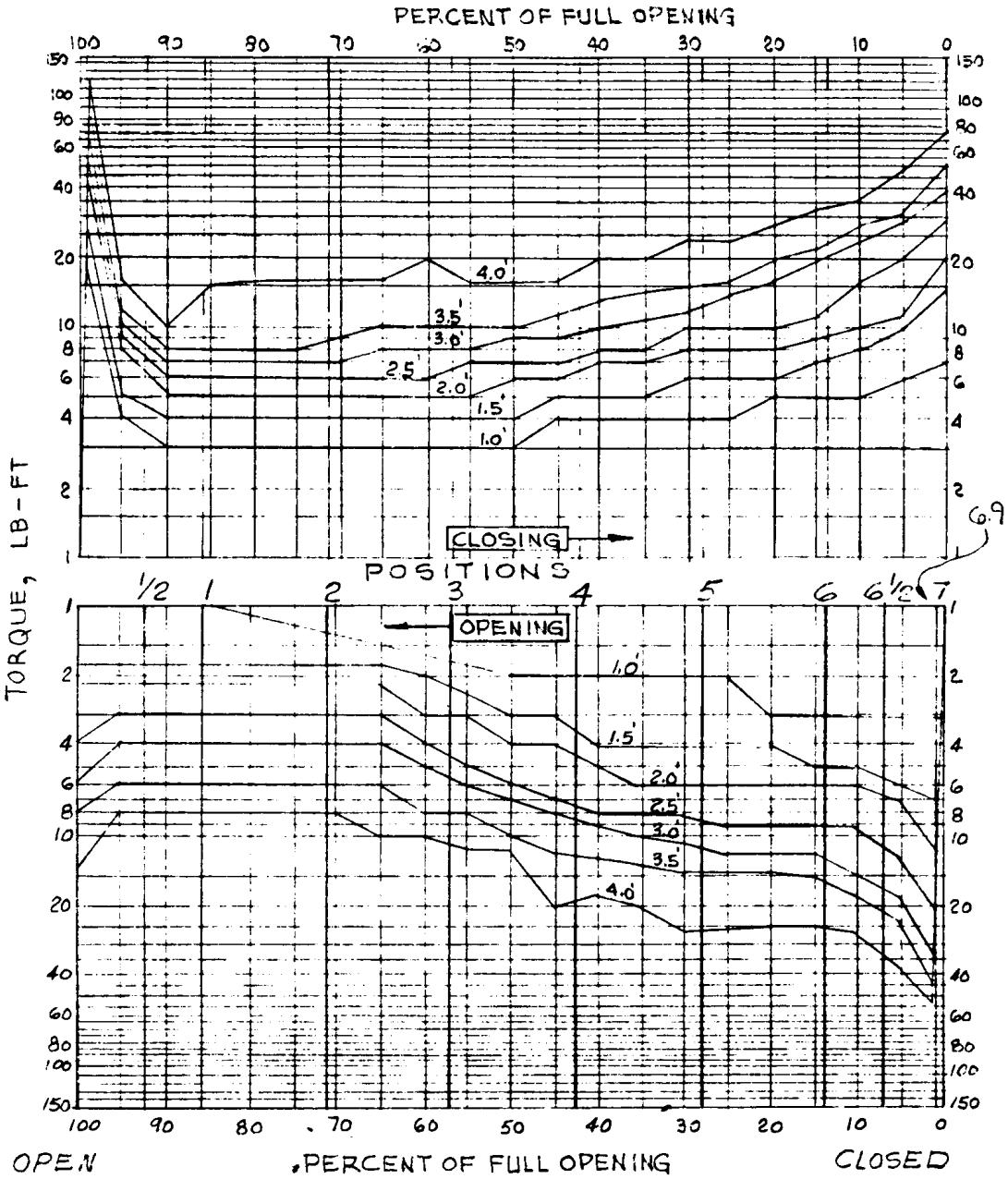

SUBMERGENCE - AS SHOWN IN FEET
CHAMBER LENGTH
UPSTREAM - 25 FT
DOWNSTREAM - 25 FT
BOTTOM CLEARANCE 0.25 FT

OHIO RIVER LINKAGE
EFFECT OF SUBMERGENCE
ON INSTANTANEOUS TORQUE
OPERATING TIME, 20.1 SEC

PLATE B-79
(SHEET 5 OF 12)

OPENING OPERATION

	REQUIRED LOADS										AVAILABLE TORQUE				
	①	②	③	④	⑤	⑥	⑦	⑧	⑨	⑩	⑪	⑫	⑬	⑭	⑮
POSITION	WES TORQUE ABOUT PINTLE LB.-FT	CORR. FACTOR	TORQUE ABOUT PINTLE (ALICE-VILLE) ③=①×② LB-FT	EFFECT. ARM ABOUT PINTLE FT	FORCE IN STRUT ⑤=③/④×1000 KIPS	EFFECT. ARM ABOUT SECTOR FT	TORQUE ABOUT SECTOR (0.95 EFF.) ⑦=⑤×⑥/0.95 FT-KIPS	SECTOR GEAR RADIUS FT	FORCE ON PISTON (0.95 EFF.) ⑨=⑦/⑧×.95 KIPS	CYL PRESS. (93.5"/") ⑩=⑨×1000/93.5 +60 PSI LOSS PSI	CYL PRESS. (93.5"/") PSI	FORCE ON PISTON (0.95 EFF.) ⑫=⑪×93.5 ×0.95 KIPS	TORQUE ABOUT SECTOR (0.95 EFF.) ⑬=⑫×⑧ ×0.95 FT-KIPS	FORCE IN STRUT ⑭=⑬/⑥ KIPS	TORQUE ABOUT PINTLE ⑮=⑭×④ FT-KIPS
0	2.2	56×10^3	123,000	19.71	6.2	6.16	40.	5.0	8.4	150	900	79.9	379.5	61.6	1210
0.5	2.2		123,000	19.64	6.3	7.57	50.		10.5	170				50.1	980
1	2.2		123,000	19.70	6.2	8.73	57.		12.0	190				43.5	860
2	2.2		123,000	19.91	6.2	10.48	68.		14.3	210				36.2	720
3	3.0		168,000	20.00	8.4	11.47	101.		21.3	290				33.1	660
4	4.5		250,000	19.67	12.7	11.62	155.		32.6	410				32.7	640
5	6.0		340,000	18.76	18.1	10.80	206.		43.4	520				35.1	660
6	6.0		340,000	16.99	20.	8.63	182.		38.3	470				44.0	750
6.5	6.7		380,000	15.59	24.	6.70	169.		35.6	440				56.6	880
6.9	12.0		670,000	13.93	48.	4.19	212.		44.6	540				90.6	1260
7	0		0	13.32	0	3.20	0		0	0				119.0	1590

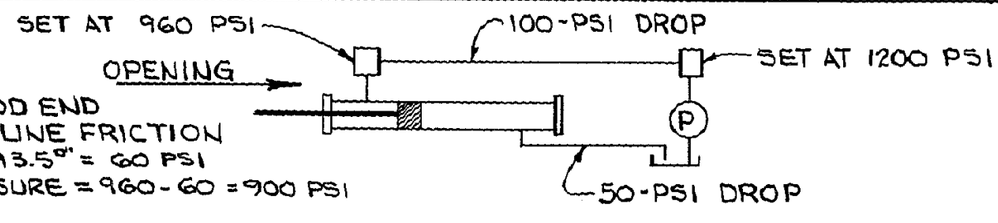

PRESSURE ON ROD END
DUE TO RETURN LINE FRICTION
= 50 PSI × 113.1"/93.5" = 60 PSI
EFFECTIVE PRESSURE = 960 - 60 = 900 PSI

OHIO RIVER LINKAGE
MITER GATE MACHINERY
OPERATING DATA
OPENING

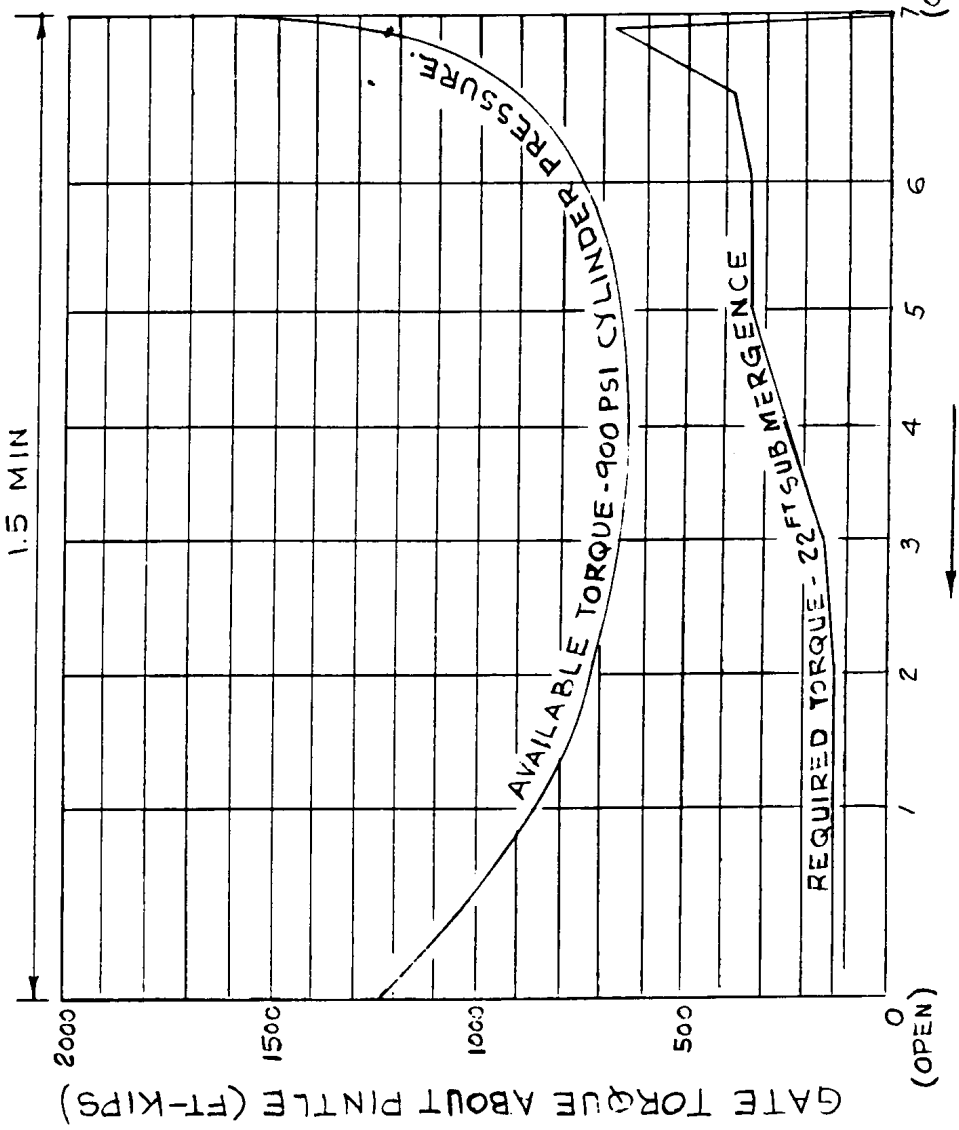

OHIO RIVER LINKAGE
GATE TORQUE ABOUT PINTLE
OPENING TIME
1.5 MIN

OPENING TIME = 1.5 MIN (ASSUMED)

$$\text{FLOW RATE} = \frac{(12^2 - 5^2)\,0.7854 \times 12 \times 12.7234}{231 \times 1.5\,(\text{MIN})} = 41.2 \text{ GPM}$$

$$\text{CLOSING TIME} = \frac{12^2 \times 0.7854 \times 12 \times 12.7234}{41.2 \times 231} = 1.82 \text{ MIN.}$$

CLOSING OPERATION

NOMENCLATURE		WES MODEL		PROPOSED LOCK ALICEVILLE		FACTOR
TIME	T T_2	20.1 SEC'S 90 SEC'S	T_1	110		
ARC OF TRAVEL	K	71.567°	K_1	71.565°	$\frac{T_2}{T_A}$	$\frac{90}{110} = 0.82$

TIME T_1 = 110 SEC

ADJUST T_2 $= T\sqrt{\frac{L_1}{L}} = 20.1\sqrt{20} = 20.1 \times 4.47 = 90$

ADJ. ANGULAR TRAVEL $T_A = T_1\left(\frac{K}{K_1}\right) = 110 \times 1 = 110$

$$\text{FACTOR} = \frac{T_2}{T_A} = \frac{90}{110} = 0.82$$

$$P_1 = P\left(\frac{L_1}{L}\right)^4\left(\frac{S_1}{S_2}\right)^{1.5}\left(\frac{T_2}{T_A}\right)^{1.0}(\text{BOTTOM EFFECT})$$

$$= P\,(20)^4(0.55)^{1.5}(0.82)^{1.0} \times \left(\begin{matrix}\text{INCREASE DUE TO}\\ \text{BOTTOM EFFECT}\end{matrix}\right)$$

$$= P \times 160{,}000 \times 0.408 \times 0.82 \times 1.27$$

$$= P \times 68{,}000$$

CLOSING OPERATION

	REQUIRED LOADS										AVAILABLE TORQUE				
	①	②	③	④	⑤	⑥	⑦	⑧	⑨	⑩	⑪	⑫	⑬	⑭	⑮
POSITION	WES TORQUE ABOUT PINTLE LB-FT	CORR. FACTOR	TORQUE ABOUT PINTLE (ALICEVILLE) ③= ①×② LB-FT	EFFECT. ARM ABOUT PINTLE FT	FORCE IN STRUT ⑤= ③/(④×1000) KIPS	EFFECT. ARM ABOUT SECTOR FT	TORQUE ABOUT SECTOR (0.95 EFF.) ⑦= (⑤×⑥)/0.95 FT-KIPS	SECTOR GEAR RADIUS FT.	FORCE ON PISTON (0.95 EFF.) ⑨= ⑦/(⑧×0.95) KIPS	CYL PRESS. (113.1"') ⑩= (⑨×1000)/113.1 + 40 PSI LOSS PSI	CYL PRESS. (113.1"') PSI	FORCE ON PISTON (0.95 EFF.) ⑫= ⑪×113.1 × 0.95 × 1/1000 KIPS	TORQUE ABOUT SECTOR (0.95 EFF) ⑬= ⑫×⑧×0.95 FT-KIPS	FORCE IN STRUT ⑭= ⑬/⑥ KIPS	TORQUE ABOUT PINTLE ⑮= ⑭×④ FT-KIPS
0	0	68×10^3		19.71		6.16		5.0		0	900	96.7	459.	74.5	1470
0.1	40		2700×10^3	19.68	137.	6.46	930		195	1760				71.0	1400
0.5	6.3		430×10^3	19.64	22.	7.57	175		37.	370				60.6	1190
1.0	5.0		340×10^3	19.70	17.3	8.73	159		33.	330				52.6	1040.
2	5.0		340×10^3	19.91	17.1	10.48	189		40.	390				43.8	870
3	5.0		340×10^3	20.00	17.0	11.47	205		43.	420				40.0	800
4	6.4		440×10^3	19.67	22.	11.62	270		57.	540				39.5	780
5	8.0		540×10^3	18.76	29.	10.80	330		69.	650				42.5	800
6	9.0		610×10^3	16.99	36.	8.63	330		69.	650				53.2	900
7	20.0		1360×10^3	13.32	102	3.20	340		72.	680				143.4	1910

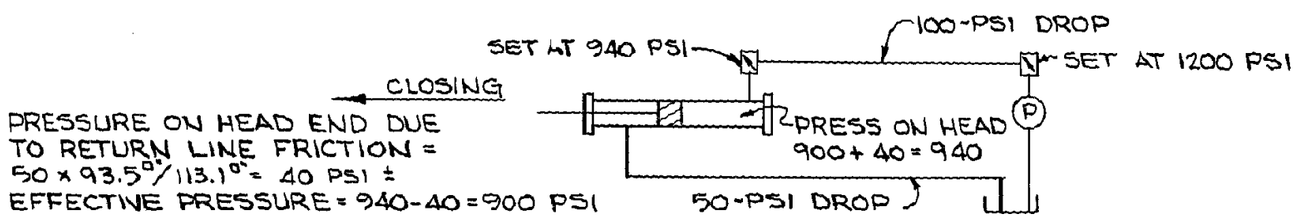

PRESSURE ON HEAD END DUE TO RETURN LINE FRICTION = $50 \times 93.5^{\circ}/113.1^{\circ} = 40$ PSI ±
EFFECTIVE PRESSURE = 940 - 40 = 900 PSI

OHIO RIVER LINKAGE
MITER GATE MACHINERY
OPERATING DATA
CLOSING

* WHEN REQUIRED GATE TORQUE EXCEEDS AVAILABLE TORQUE, SOME HYDRAULIC OIL WILL BE BYPASSED AT RELIEF VALVE AND THE GATE WILL AUTOMATICALLY TRAVEL AT A SPEED THAT WILL REDUCE THE REQUIRED GATE TORQUE TO THE GATE TORQUE AVAILABLE FROM 900 PSI EFFECTIVE CYLINDER PRESSURE.

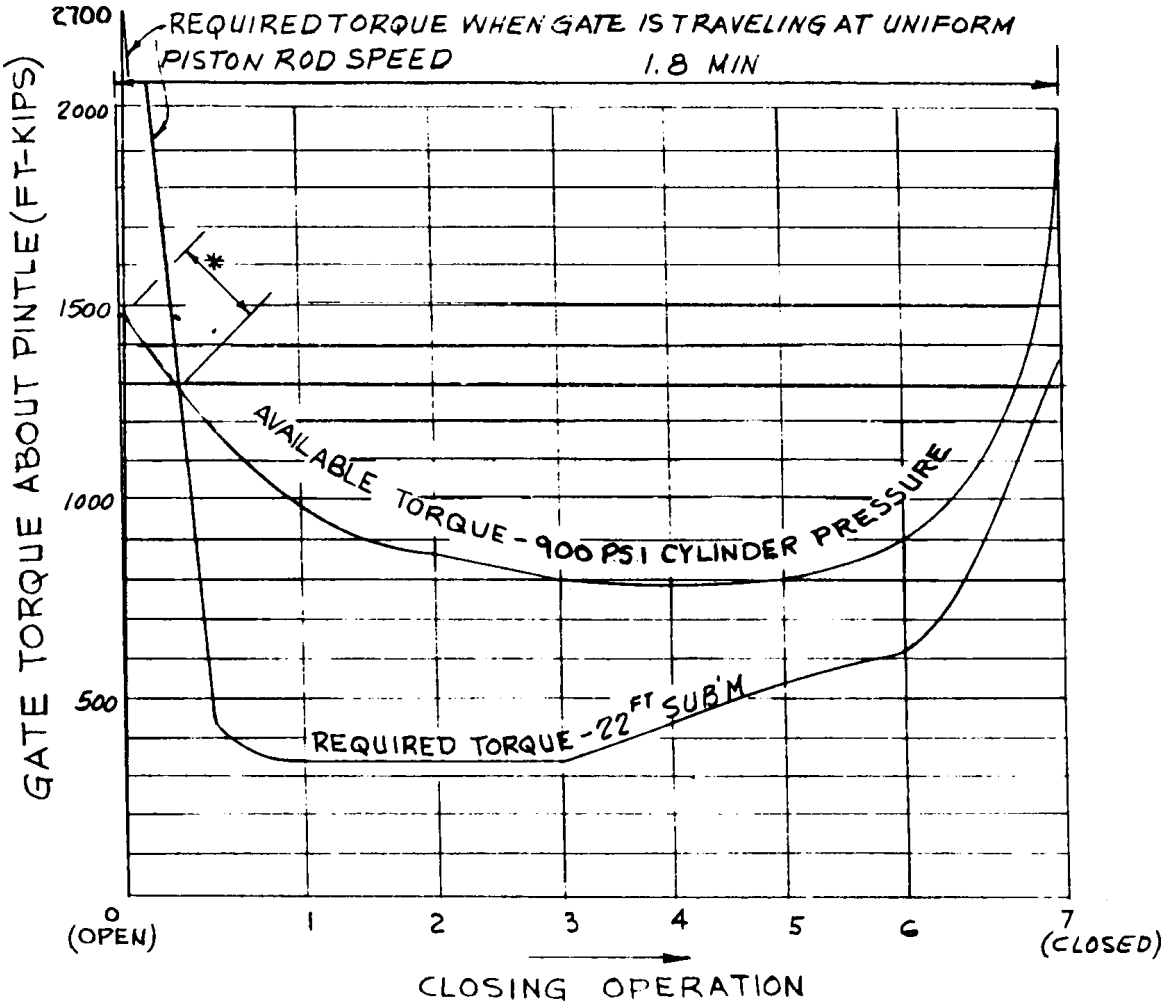

OHIO RIVER LINKAGE
GATE TORQUE ABOUT PINTLE
CLOSING TIME
1.8 MIN

PLATE B-79
(SHEET 10 OF 12)

TEMPORAL LOADING

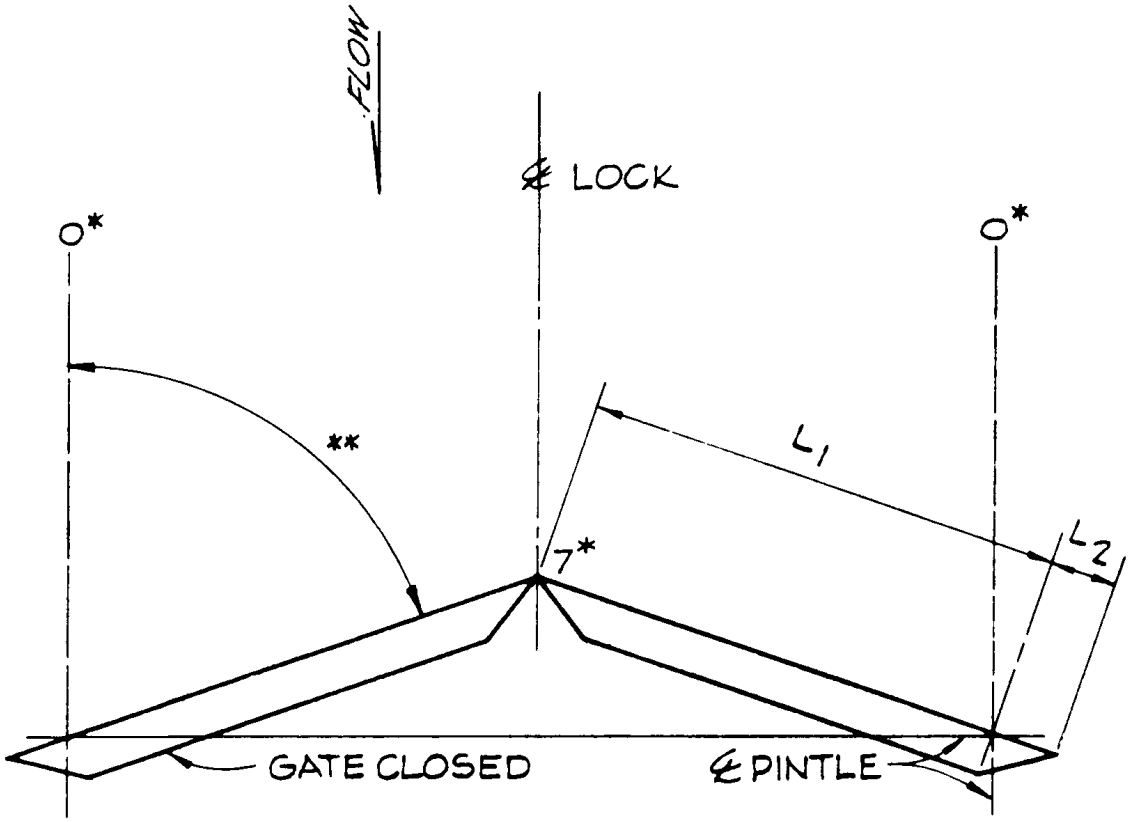

** AREA OF TRAVEL WHERE NORMAL LOADS APPLY

* POSITION WHERE TEMPORAL LOADS APPLY

$$T_t = \frac{62.4}{4}(L_1^2 - L_2^2)(h_2^2 - h_1^2)$$

T_t = GATE TORQUE ABOUT PINTLE DUE TO TEMPORAL LOAD (FT-LB)

L_1 = GATE LENGTH PINTLE TO MITER (FT)

L_2 = GATE LENGTH PINTLE TO QUOIN (FT)

h_1 = GATE SUBMERGENCE (FT)

h_2 = GATE SUBMERGENCE PLUS TEMPORAL HEAD (FT)

TEMPORAL FORCES EXAMPLE COMPUTATIONS

$$T_t = \frac{62.4}{4}(L_1^2 - L_2^2)(h_2^2 - h_1^2)$$

FOR ALICEVILLE LOCKS

$L_1 = 718.34'' = 59.86'$

$L_2 = 21.65'' = 1.804'$

$h_1 = 22'$

$h_2 \quad 23.25'$

$$T_t = \frac{62.4}{4}\left[(59.86)^2 - (1.804)^2\right]\left[(23.25)^2 - (22)^2\right]$$

$$T_t = \frac{62.4}{4}\left[3579.96\right]\left[56.56\right]$$

$T_t = 3{,}159{,}000$ FT-LB

REFERENCE PLATE B-79, SHEET 9, POSITION 7

CALCULATE ⟶ THE FORCE IN THE STRUT FOR A PINTLE TORQUE OF 3,159,000 FT-LB

$$\text{STRUT FORCE} = \frac{3{,}159{,}000}{13.32} = 237{,}000 \text{ LB}$$

$$\text{TORQUE ABOUT SECTOR} = \frac{237{,}000}{0.95} = 798{,}000 \text{ FT-LB}$$

$$\text{FORCE ON PISTON} = \frac{798{,}000}{5.0 \times 0.95} = 168{,}000 \text{ LB}$$

$$\text{CYLINDER PRESSURE} = \frac{168{,}000}{113.1} + 40 \text{ PSI} = 1525 \text{ PSI}$$

A CYLINDER PRESSURE OF 1525 PSI IS REQUIRED TO MAINTAIN THE GATE IN THE MITER POSITION AGAINST A TEMPORAL HEAD OF 1.25 FT.

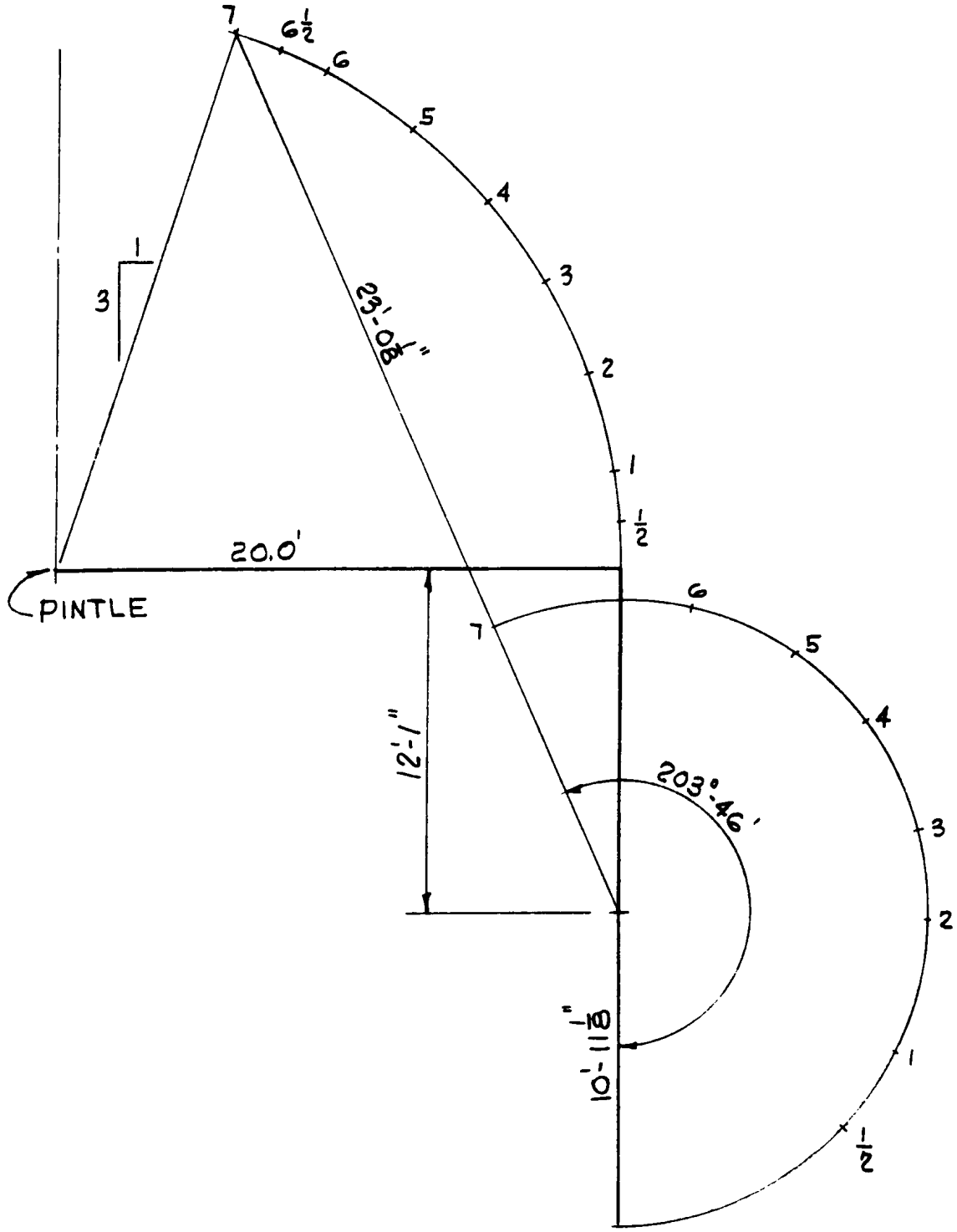

KINEMATICS
PANAMA CANAL LINKAGE
SCALE: 3/16"=1'-0"

PLATE B-80
(SHEET 1 OF 13)

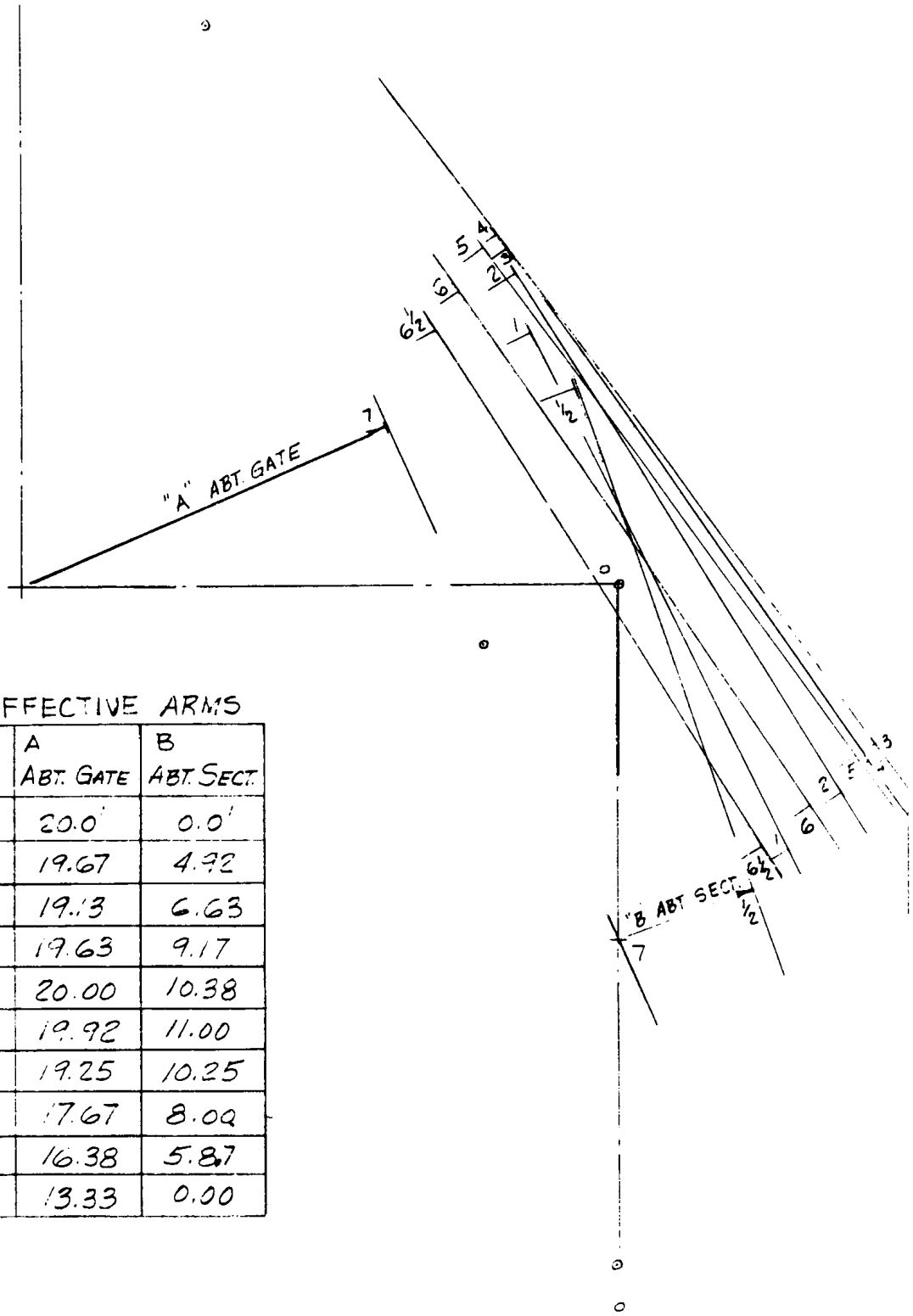

EFFECTIVE ARMS

POS.	A ABT. GATE	B ABT. SECT.
0	20.0'	0.0'
½	19.67	4.92
1	19.13	6.63
2	19.63	9.17
3	20.00	10.38
4	19.92	11.00
5	19.25	10.25
6	17.67	8.02
6½	16.38	5.87
7	13.33	0.00

PLATE B-80
(SHEET 2 OF 13)

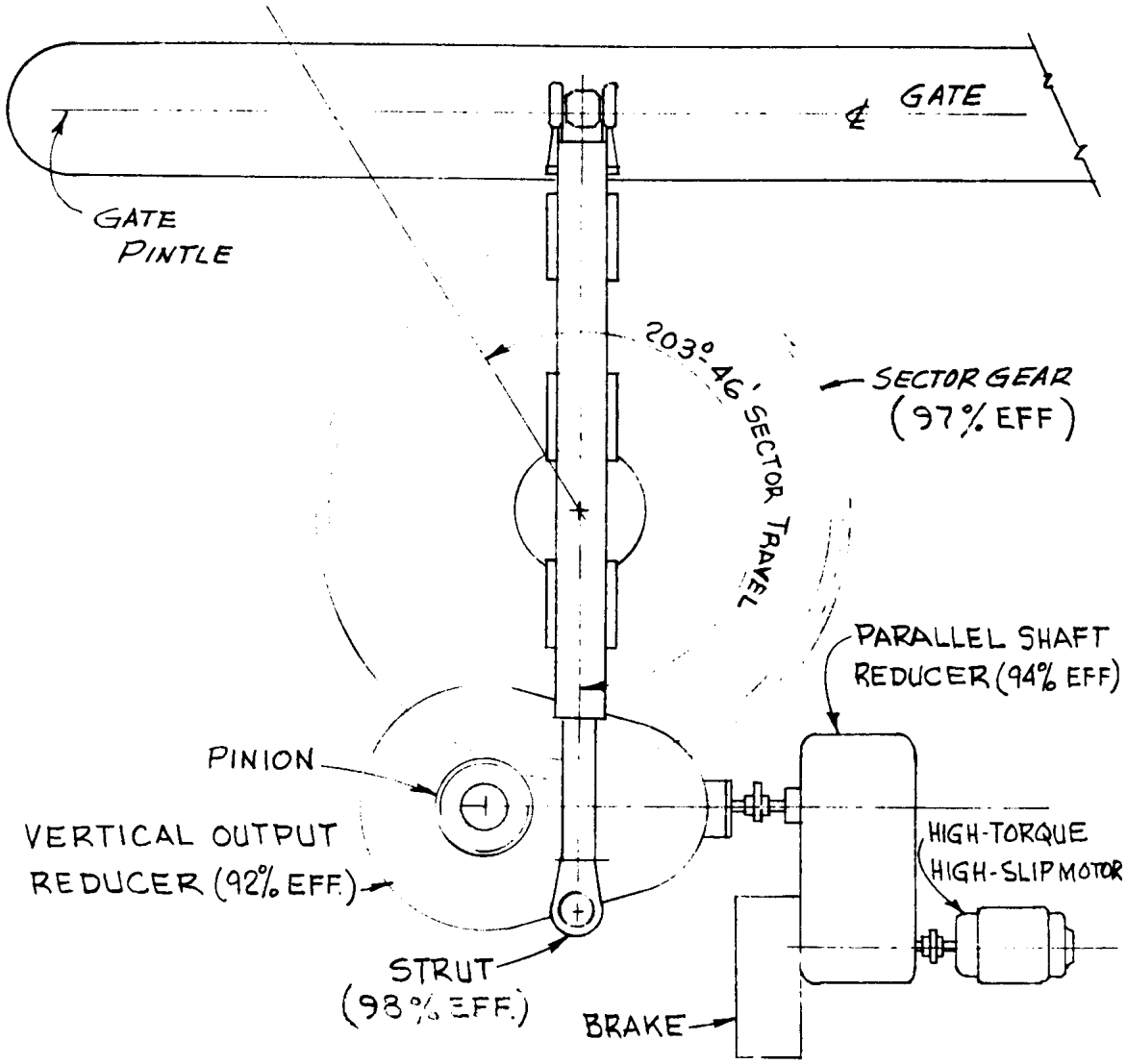

NL SPEED-MOTOR 1800
FL " " 1600

$$\text{RPM OF SECTOR} = \frac{203.765}{1.65 \times 60} = 2.07^{\circ/\text{SEC}} \therefore \frac{2.07 \times 60}{360} = 0.345$$

AVERAGE OPERATING TIME

OVERALL RED. RATIO = 1600/0.345 = 4640 (MOTOR TO SECTOR)

OVERALL EFFICIENCY = 0.98 × 0.97 × 0.92 × 0.94 = 0.82

PLATE B-80
(SHEET 3 OF 13)

PANAMA LINKAGE

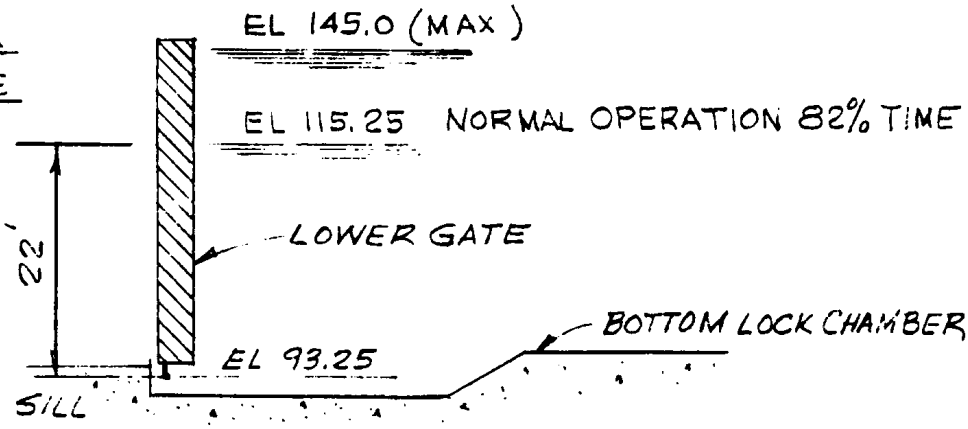

NORMAL OPERATION (ELECTRIC-MOTOR DRIVE)

ASSUME OPENING TIME = 99 SEC (SAME TOTAL TIME AS HYDR OPERATION)

$$\text{HYD OPER} = \left(\frac{1.5 + 1.8}{2}\right) 60 = 99 \text{ SEC}$$

SUBMERGENCE = 22 FT

NOMENCLATURE		PANAMA CANAL		PROPOSED LOCK (ALICEVILLE)		FACTOR
LENGTH GATE	L	84.304	L_1	60.0	L_1/L	= 0.712
SUBMERGENCE	S S_2	82.5 58.7	S_1	22.0	S_1/S_2	= 0.375
TIME	T T_2	120 SEC 101.3 SEC	T_1	99.0	T_2/T_1	= 1.023 SEC
ARC OF TRAVEL	K	63.436°	K_1 T_A	71.565 111.7	T_2/T_A	= 0.907

$$\text{FACTOR } \frac{L_1}{L} = \frac{60}{84.304} = 0.712$$

SUBMERGENCE = 22

$$\text{ADJ. SUBMERGENCE} = S = S_2\left(\frac{L_1}{L}\right) = 82.5 \times 0.712 = 58.7$$

$$\text{FACTOR } \frac{S_1}{S} = \frac{22}{58.7} = 0.375$$

T_1 = TIME FOR PROPOSED LOCK = 99 SEC

T = TIME FOR PANAMA CANAL = 120 SEC

$T_2 = T\sqrt{\frac{L_1}{L}}$ = ADJ TIME = 101.3 MODEL

T_A = ANGULAR ADJ $= T_1\left(\frac{K_1}{K}\right) = 111.7$

TIME T_1 = 99 SEC (PROPOSED GATE)

ADJ TIME $= T_2 = T\sqrt{\frac{L_1}{L}} = 120\sqrt{0.712} = 120 \times 0.844 =$
$= 101.3$ MODEL

ANGULAR TRAVEL $T_A = T_1\left(\frac{K_1}{K}\right) = 99\left(\frac{71.565}{63.436}\right) = 111.7$

ALICEVILLE

PANAMA CANAL

FACTOR $\frac{T_2}{T_A} = \frac{101.3}{111.7} = 0.907$

EFFECT OF BOTTOM CLEARANCE - NO ADJUSTMENT NECESSARY WHEN USING PANAMA TESTS

(NORMAL OPERATION 82% TIME)

$P_1 = P\left(\frac{L_1}{L}\right)^4\left(\frac{S_1}{S}\right)^{1.7}\left(\frac{T_2}{T_A}\right)^{1.3}$ P_o (FROM PANAMA TEST CURVES)

$= P(0.712)^4(0.375)^{1.7}(0.907)^{1.3}$

$= P(0.25)(0.188)(0.881) = P_o(0.0414)$

(MAX SUB'MG - LESS THAN 18% TIME)

H = 145.0 - 93.25 = 51.75' - SAY 52'

ADJ FACTOR $= \frac{52}{58.7} = 0.8859$

$P_1 = P(0.714)^4(0.8859)^{1.7}(0.907)^{1.3}$

$= P(0.25)(0.814)(0.881) = P_o(0.1793)$

CORRECTION FACTOR FOR 52' SUB'MG.)

$\frac{P_{52}}{P_{22}} = \frac{0.1793}{0.0414} = 4.33$

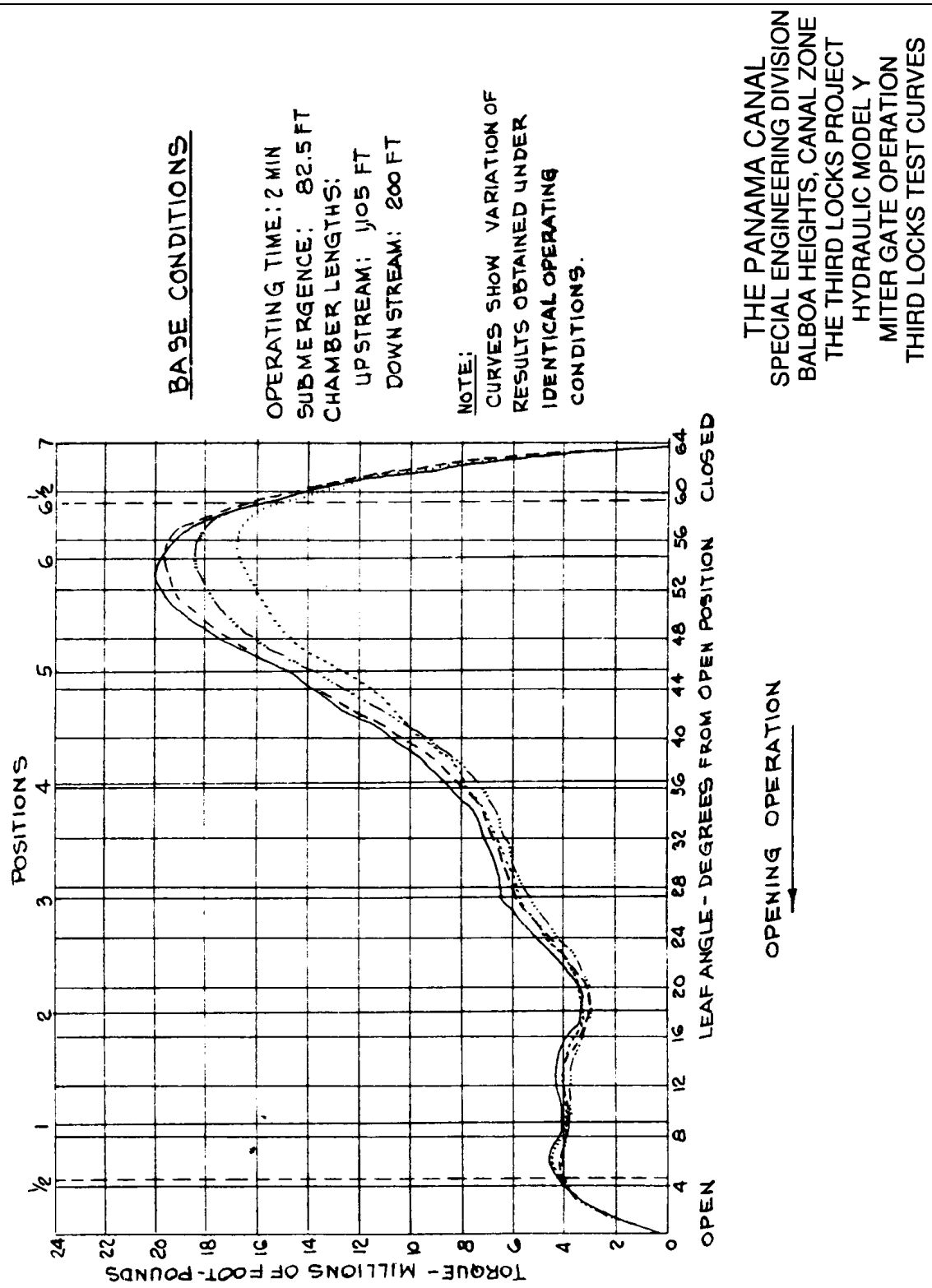

THE PANAMA CANAL
SPECIAL ENGINEERING DIVISION
BALBOA HEIGHTS, CANAL ZONE
THE THIRD LOCKS PROJECT
HYDRAULIC MODEL Y
MITER GATE OPERATION
THIRD LOCKS TEST CURVES

PLATE B-80
(SHEET 6 OF 13)

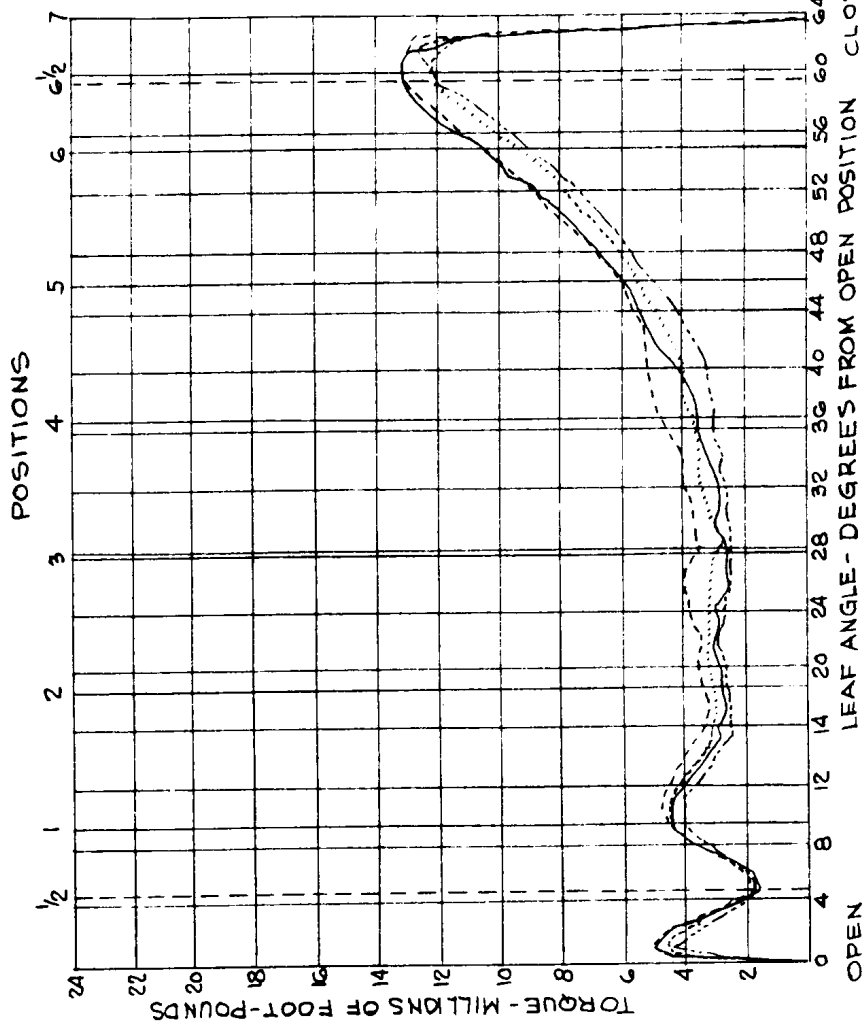

THE PANAMA CANAL
SPECIAL ENGINEERING DIVISION
BALBOA HEIGHTS, CANAL ZONE
THE THIRD LOCKS PROJECT
HYDRAULIC MODEL Y
MITER GATE OPERATION
THIRD LOCKS TEST CURVES

REQ'D POWER - OPENING OPERATION

(22 FT SUB'M)

POS.	TORQUE ABT PINTLE PANAMA C. FT-LB	CORR. FACTOR	TORQUE ABT PINTLE ALICEVILLE FT-KIPS	EFFECT. ARM ABT PINTLE FT	FORCE IN STRUT (0.98 EFF)	EFFECT. ARM ABT SECTOR FT	TORQUE ABT SECTOR (0.97 EFF)	REDUCT RATIO (0.865 EFF)	REQ'D MOTOR TORQUE FT-LBS	HP = $\frac{T \times RPM}{5250}$
0	0	0.0414	0	20.0	0	0	0	4640	0	0
0.5	4.0×10^6		165.6×10^3	19.67	8.59 K	4.92	43.6 K		10.9	3.32
1	3.8×10^6		157.3×10^3	19.13	8.39 K	6.63	57.4 K		14.3	4.4
2	3.0×10^6		124.2×10^3	19.63	6.46 K	9.17	61.0 K		15.2	4.6
3	5.9×10^6		244.3×10^3	20.00	12.46 K	10.38	133.4 K		33.2	10.1
4	7.9×10^6		327.0×10^3	19.92	16.75 K	11.00	190.0 K		47.3	14.4
5	14.0×10^6		579.6×10^3	19.25	30.70 K	10.25	324.7 K		80.9	24.7
6	18.4×10^6		761.8×10^3	17.67	43.99 K	8.00	362.8 K		90.4	27.5
$6\frac{1}{2}$	15.4×10^6		637.6×10^3	16.38	39.72 K	5.87	240.4 K		59.9	18.3
7	0		0	13.33	0	0	0		0	0

FORCES AT MAX SUB'M. (52 FT)

REQUIRED POWER - OPENING OPERATION

POS.	TORQUE FROM P.C. CURVES	CORR FACTOR = 0.1793 / 0.0414	FORCE IN STRUT 22-FT SUB'M.	FORCE IN STRUT 52-FT SUB'M.	TORQUE ABT PINTLE 22-FT SUB'M.	TORQUE ABT PINTLE 52-FT SUB'M.
0	0	4.33	0	0	0	0
0.5	4.0×10^6		8.59 K	37.2	165.6×10^3	717.1×10^3
1	3.8×10^6		8.39 K	36.3	157.3×10^3	681.1×10^3
2	3.0×10^6		6.46 K	28.0	124.2×10^3	537.8×10^3
3	5.9×10^6		12.46 K	53.9	244.3×10^3	1057.8×10^3
4	7.9×10^6		16.75 K	72.5	327.0×10^3	1415.9×10^3
5	14.0×10^6		30.70 K	132.9	579.6×10^3	2509.6×10^3
6	18.4×10^6		43.99 K	190.5	761.8×10^3	3298.6×10^3
$6\frac{1}{2}$	15.4×10^6		39.72 K	172.0	637.6×10^3	2760.8×10^3
7	0		0	0	0	0

MOTOR SELECTION

22' SUB. MOTOR MUST PROVIDE REQ'D TORQUE AT ALL POSITIONS AND AT NORMAL SPEED.

52' SUB. MOTOR MUST PROVIDE PEAK TORQUE W/OUT EXCEEDING 150% OF F.L.T. GATE WILL BE SLOWED DUE TO MOTOR SPEED LOSS AT OVERLOAD. THEREFORE REQ'D TORQUE AS SHOWN IN PLATE B-80, SHEET 11, WOULD REQUIRE CORRECTION.

PEAK OCCURS AT POS 6.
TORQUE ABOUT PINTLE = 3,298.6 FT-LB FOR NORMAL SPEED.

AT 150 % O.L.
MOTOR SPEED = (1,800)(0.77) = 1,386 RPM

1. GATE SPEED AT 1,386 MOTOR RPM

$$T_1 = (99)\left(\frac{1386}{1,600}\right) = 114 \text{ SEC}$$

2. ADJ PINTLE TORQUE FOR CHANGED TIME

$T_1 = 114$

$T_2 = 101.3$

$$T_A = 114\left(\frac{71.565}{63.436}\right) = 128.6$$

FACTOR $T_2/T_A = 101.3 / 128.6 = 0.788$

3. CALCULATE PINTLE TORQUE AT POS 6

$$P_1 = P_o(0.25)(0.814)(0.788)^{1.3}$$
$$= P_o(0.204 * 0.73) = P_o(0.149)$$
$$P_1 = 18.4 \times 10^6 * 0.149 = 2{,}742 \text{ FT-KIPS}$$

4. MOTOR TORQUE AT 150% OL.

$$\text{MOTOR TORQUE} = \frac{2742 \text{ FT-KIPS} * 8.00}{17.67 * 0.98 * 0.97 * 4640 * 0.865} = 322. \text{ FT-LB}$$

$$\text{NORMAL F.L. TORQUE} = \frac{322}{1.5} = 214.7 \text{ FT-LB}$$

$$\text{MOTOR HP} = \frac{214.7 * 1{,}600}{5250} = 65.4 \text{ HP}$$

75 HP REQUIRED.

AVAILABLE POWER-OPENING OPERATION

POS	F.L.* MOTOR TORQUE	RED. RATIO (0.865 EFF)	TORQUE ABT SECTOR	EFFECT. ARM ABT SECTOR (0.97)	FORCE IN STRUT	EFFECT. ARM ABT PINTLE	TORQUE ABT PINTLE (0.98 EFF.)
0	246 FT.LB.	4640	987.3 IK	0	0	20.00	0
0.5	↓		↓	4.92	194.6 K	19.67	3752 FT/K
1				6.63	144.4	19.13	2708
2				9.17	104.4	19.63	2009
3				10.38	92.3	20.00	1808
4				11.00	87.1	19.92	1700
5				10.25	93.4	19.25	1762
6				8.00	119.7	17.67	2073
$6\frac{1}{2}$				5.87	163.1	16.38	2619
7				0	0	13.33	0

* 75 HP AT 1,600 RPM F.L. SPEED

$$T = \frac{HP \times 5250}{RPM} = 246 \text{ FT-LB}$$

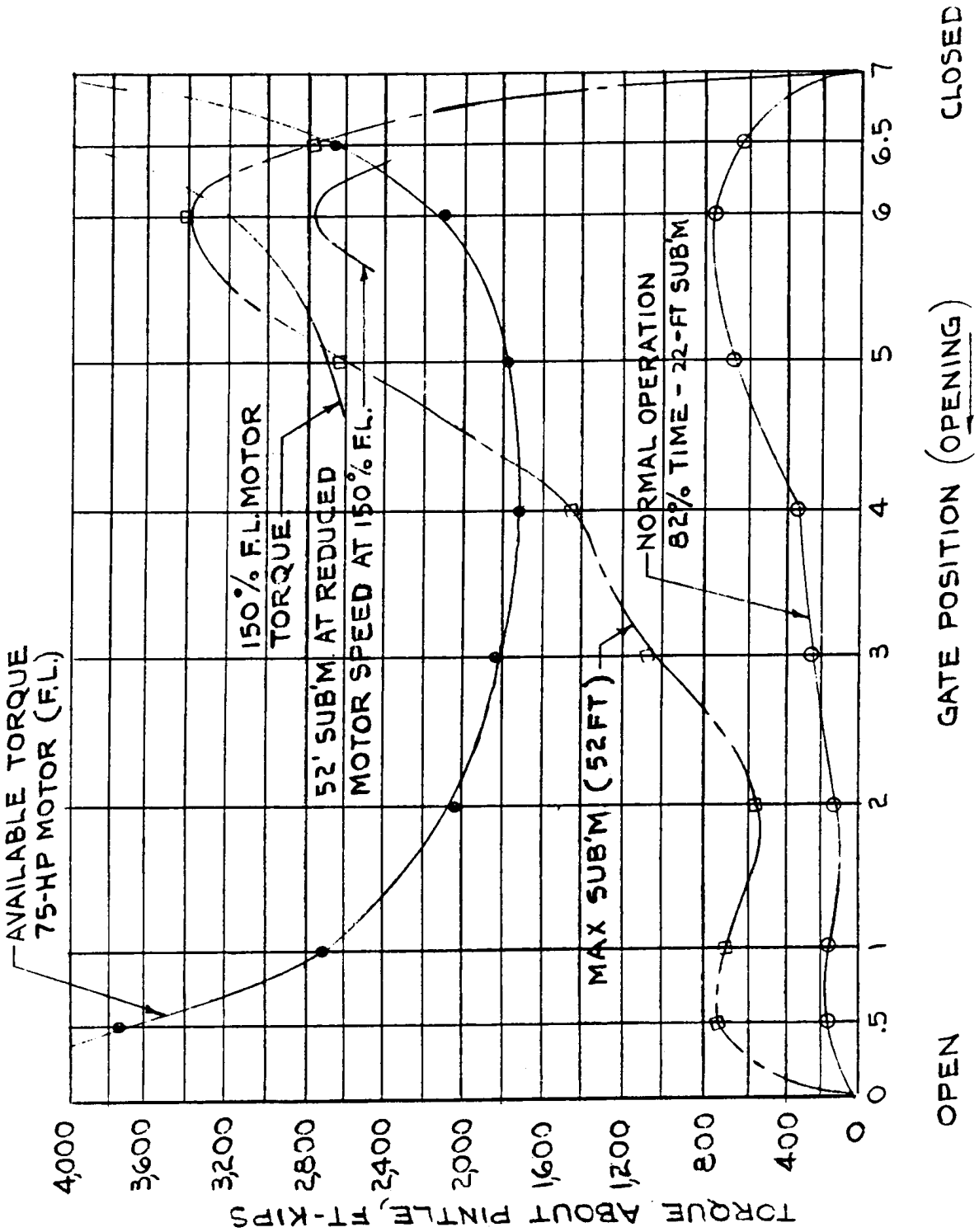

PLATE B-80
(SHEET 13 OF 13)

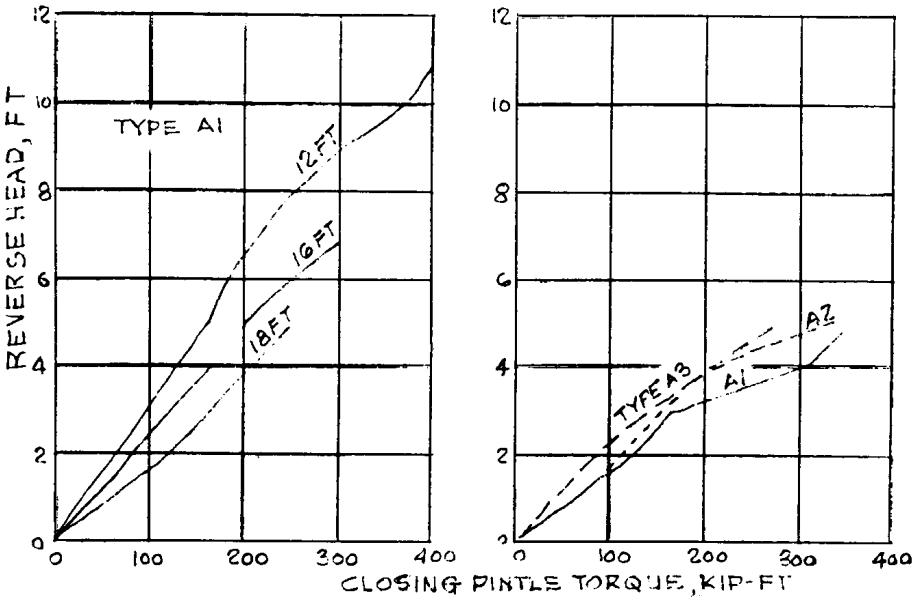

a. GATE OPEN 5 FT
LOWER POOL DEPTHS 12, 16, AND 18 FT

b. GATE OPEN 5 FT
LOWER POOL DEPTH 18 FT

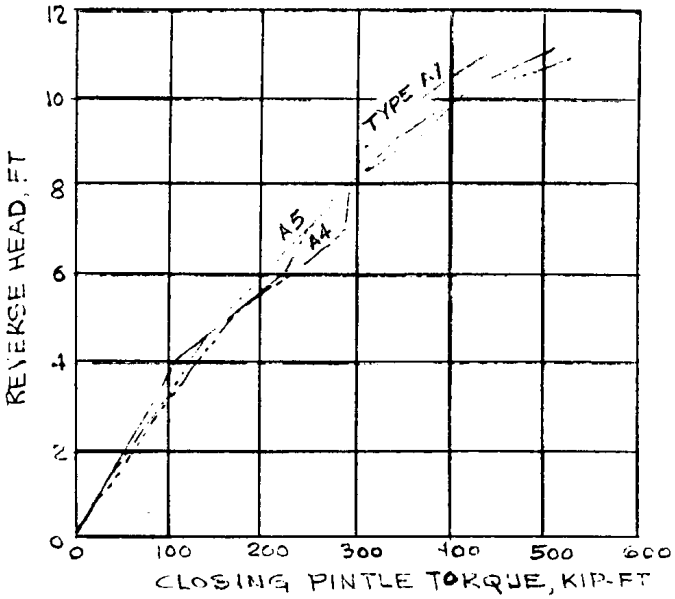

c. GATE OPEN 7 FT
LOWER POOL DEPTH 12 FT

FROM WES OPERATING
FORCES ON SECTOR GATES
WES REPORT H-70-2,
UNDER REVERSE HEADS,
APPENDIX A, PLATE A-4

EFFECTS OF
REVERSE HEAD ON
CLOSING PINTLE TORQUE

SECTOR GATE DESIGN
PINTLE TORQUE FOR REVERSE HEAD

WES TECHNICAL REPORT H-70-2 AND PROTOTYPE STUDY TR H-71-4

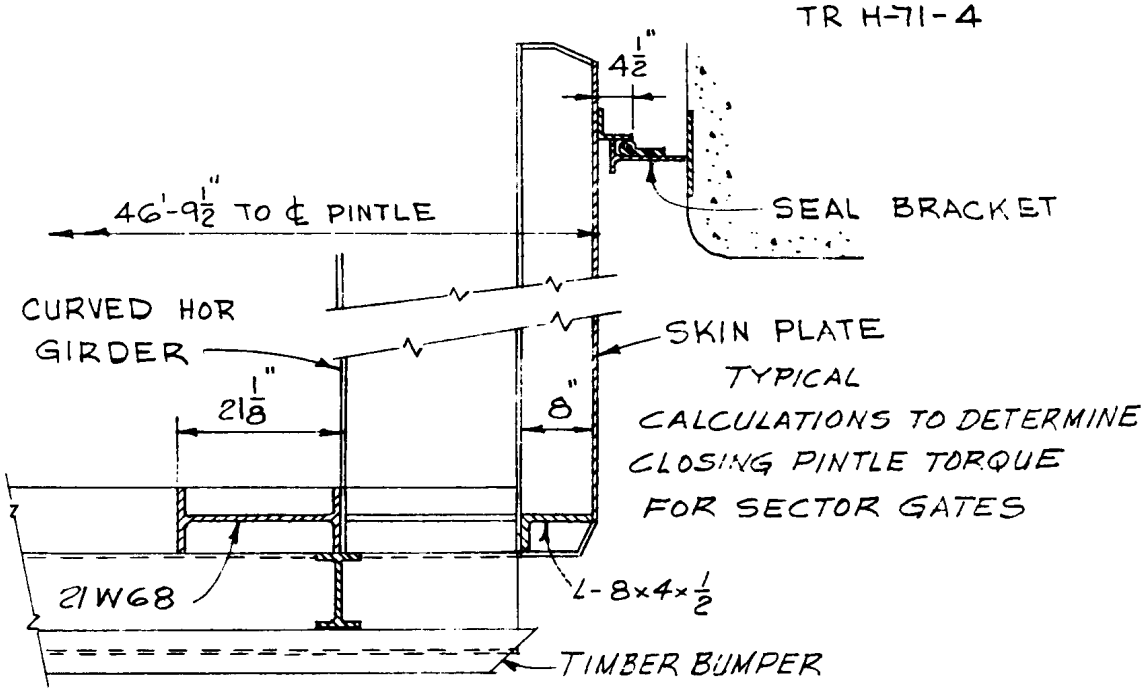

TYPICAL CALCULATIONS TO DETERMINE CLOSING PINTLE TORQUE FOR SECTOR GATES

NOSE AND SEAL DETAIL OF PROPOSED GATE

PROJECTED WIDTH OF MITER BEAM, SKIN PLATE RIB AND SEAL PLATE BRACKET $= 21\frac{1}{8}'' + 8'' + 4\frac{1}{2}'' = 33.625''$

RADIUS OF GATE $= 46'-9\frac{1}{2}'' = 46.792'$

DESIGN CONDITIONS:

5' REVERSE HEAD
16' TAILWATER

(1) TO OBTAIN PEAK PINTLE TORQUE DUE TO WATER LOAD ONLY SEE CURVES, FIG. a, PLATE B-81, FOR 5' REVERSE HEAD AND 16' TAILWATER. = 200 FT-KIPS

FIG. a IS DEVELOPED FOR A GATE WITH RADIUS OF 42 FT AND TOTAL PROJECTED WIDTH OF MITER BEAM, SKIN PLATE RIB, AND SEAL BRACKET OF 30.375"

$= 17\frac{7}{8}'' + 8'' + 4\frac{1}{2}'' = 30.375''$ (SEE WES TECHNICAL REPORT, H-70-2 APP. A, PLATE A1)

PLATE B-82
(SHEET 1 OF 3)

SECTOR GATES,
DETERMINATION OF
TOTAL PINTLE TORQUE

CORRECT MODEL TORQUE FOR RADIUS AND PROJECTED AREA

$$T = 200^{FT/K}\left(\frac{33.625''}{30.375''}\right)\left(\frac{46.792'}{42.0}\right) = 247^{FT/K}$$

(2) COMPUTE TORQUE DUE TO DEAD LOAD AND STATIC WATER LOAD FRICTION:

DEAD LOAD

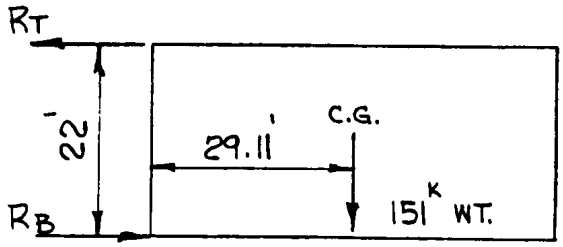

ASSUME:

WEIGHT OF GATE = 151.0K

HINGE PIN DIAM = 12"

PINTLE PIN DIAM = 18"

$$R_T = R_B = \frac{151^K \times 29.11'}{22'} = 200^K$$

WATER LOAD

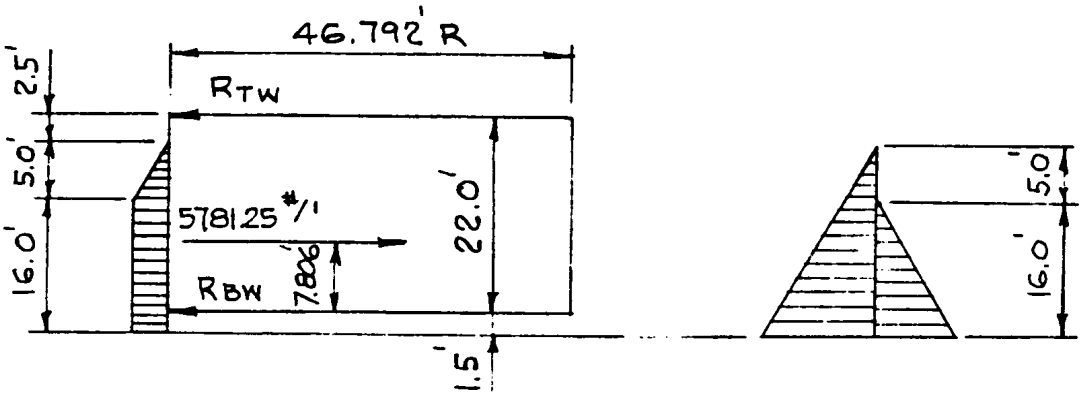

$62.5 \times 5'\text{-}0'' = 312.5^{\#}/\square'$

$312.5 \times \frac{5'\text{-}0''}{2} = 781.25^{\#}/'$

$312.5 \times 16' = 5000.00$

$5{,}781.25^{\#}/'$

$781.25 \times 16.167' = 12{,}630.47'^{\#}$

$5000 \times 6.50' = 32{,}500.00'^{\#}$

$45{,}130.47'^{\#}$

$$C.G = \frac{45{,}130.47}{5{,}781.25} = 7.806'$$

$$R_{TW} = \frac{5781.25 \times 7.806}{22} \times 53.716' = 110.2^K$$

$$R_{BW} = (5781.25 \times 53.716') - 110.2^K = 200.3^K$$

(53.716' IS THE CHORD LENGTH BEHIND THE SKIN PLATE, NOT THE RADIUS OF THE GATE)

HINGE FRICTION TORQUE

ASSUME: (a) WEIGHT OF GATE ACTING AT ONE-HALF OF PIN RADIUS = 9.0"/2 = 4.5"

(b) COEFFICIENT OF FRICTION FOR PINS = 0.25

$$T_{HF} = \left(200^{K} \times 0.25 \times \frac{6''}{12}\right) 4.5^{*} + \left(110.2^{K} \times 0.25 \times \frac{6''}{12}\right)$$

$$= 112.5 \text{ FT-KIPS} + 13.8 \text{ FT-KIPS} = 126.3 \text{ FT-KIPS}$$

* PROTOTYPE FRICTION WAS FOUND TO BE 4.5 TIMES THE CALCULATED FRICTION (SEE WES TECHNICAL REPORT H-71-4, PAR. 14, WES 1971)

$$T_{PF} = \left(151^{K} \times 0.25 \times \frac{4.5''}{12}\right) 4.5^{*} + \left(200^{K} \times 0.25 \times \frac{9}{12}\right) 4.5^{*} - \left(200.3^{K} \times 0.25 \times \frac{9''}{12}\right) = 63.7 \text{ FT-KIPS} + 168.75 \text{ FT-KIPS} - 37.6 \text{ FT-KIPS}$$

$$= 194.8 \text{ FT-KIPS}$$

TOTAL FRICTIONAL TORQUE

$$= 126.3 \text{ FT-KIPS} + 194.8 \text{ FT-KIPS} = 321.1 \text{ FT-KIPS}$$

TOTAL TORQUE FOR DESIGN OF MACHINERY

$$= 247.0 \text{ FT-KIPS} + 321.1 \text{ FT-KIPS} = 568.1 \text{ FT-KIPS}$$

NOTE:

THERE WILL BE NO MOMENT DUE TO SEAL FRICTION AS REVERSE HEAD ELIMINATES MITER SEAL FRICTION.

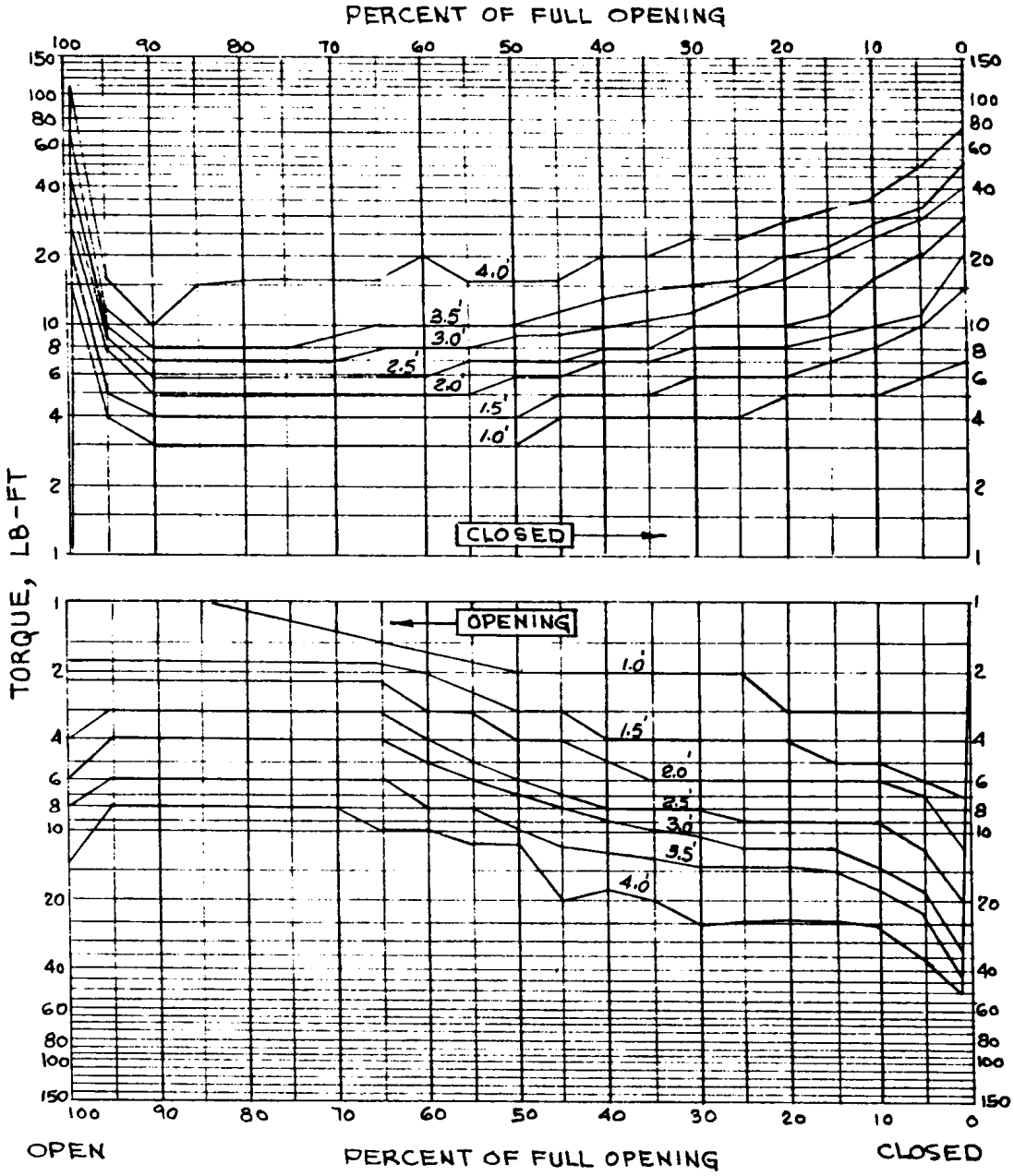

SUBMERGENCE - AS SHOWN IN FEET
CHAMBER LENGTH
UPSTREAM - 25 FT
DOWNSTREAM - 25 FT
BOTTOM CLEARANCE 0.25 FT

MITER GATES
OHIO RIVER LINKAGE
EFFECT OF SUBMERGENCE
ON INSTANTANEOUS TORQUE
OPERATING TIME, 20.1 SEC

PLATE B-83

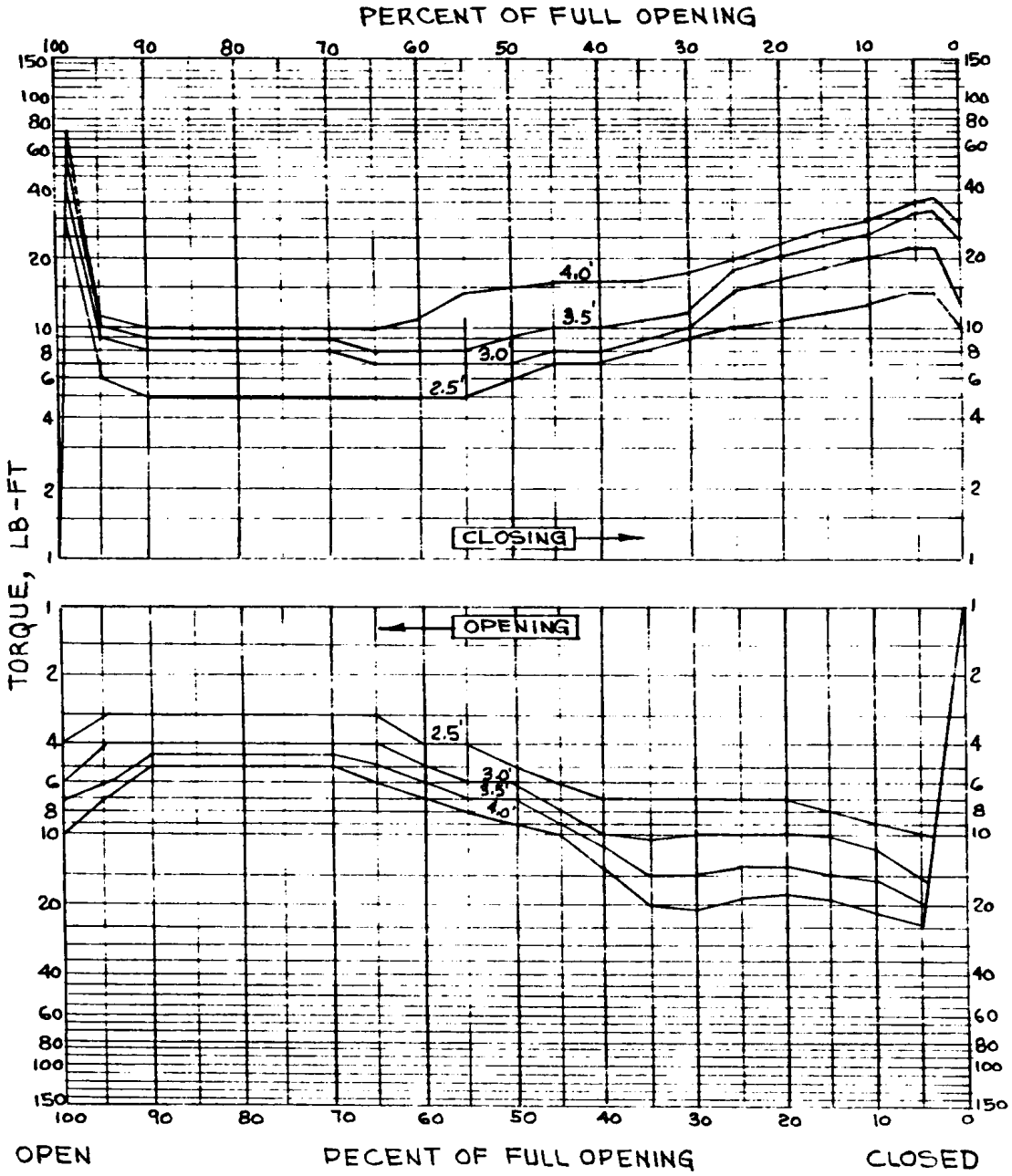

SUBMERGENCE - AS SHOWN IN FEET
BOTTOM CLEARANCE 0.25 FT

MITER GATES
MODIFIED OHIO RIVER LINKAGE
EFFECT OF SUBMERGENCE
ON INSTANTANEOUS TORQUE
OPERATING TIME, 20.1 SEC
CHAMBER LENGTHS, 30 FT

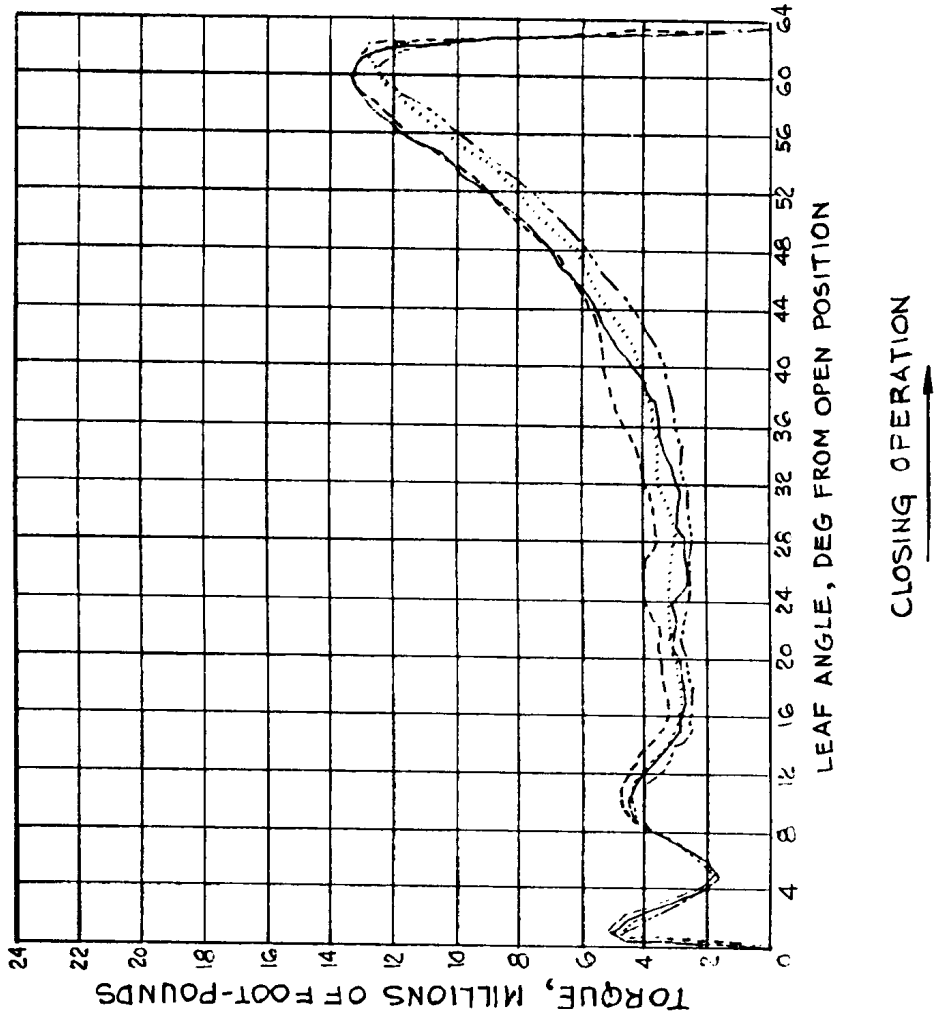

MITER GATES
THE PANAMA CANAL
SPECIAL ENGINEERING DIVISION
BALBOA HEIGHTS, CANAL ZONE
THE THIRD LOCKS PROJECT
HYDRAULIC MODEL Y
MITER GATE OPERATION
THIRD LOCKS TEST CURVES

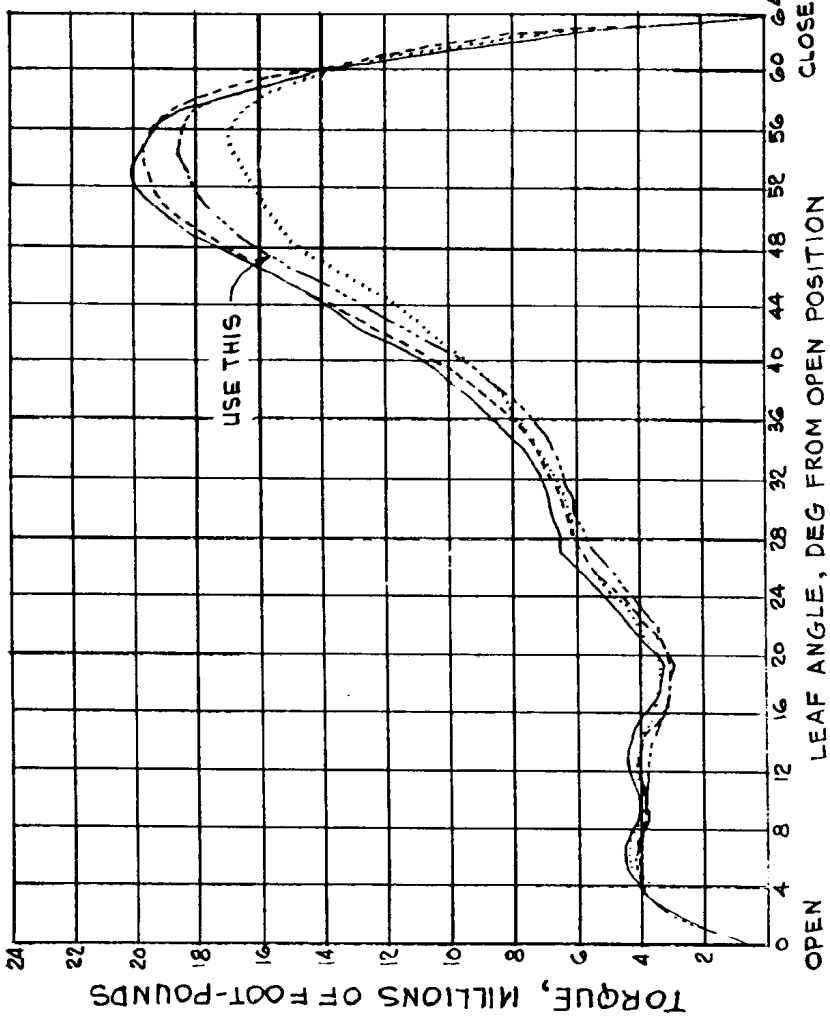

MITER GATES
THE PANAMA CANAL
SPECIAL ENGINEERING DIVISION
BALBOA HEIGHTS, CANAL ZONE
THE THIRD LOCKS PROJECT
HYDRAULIC MODEL Y
MITER GATE OPERATION
THIRD LOCKS TEST CURVES

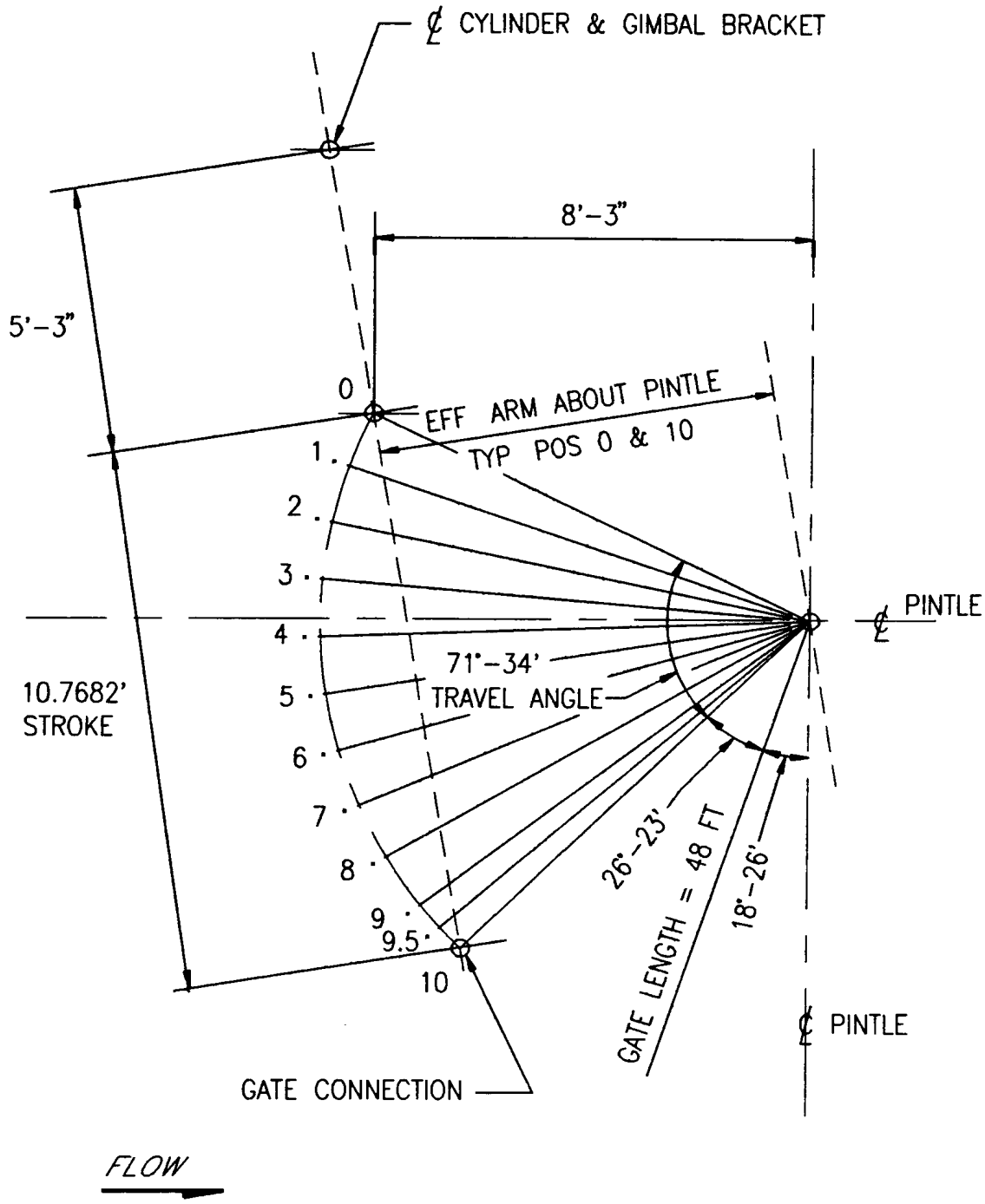

KINEMATICS
DIRECT CONNECTED CYLINDER
SCALE: 1"=3'-0"

PLATE B-87
(SHEET 1 OF 10)

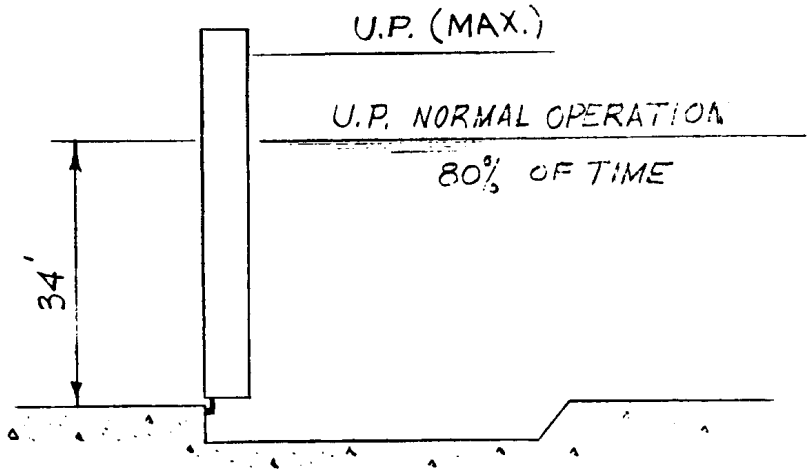

DESIGN CRITERIA (OPENING OPERATION) 80% TIME

OPENING TIME: ASSUME 90 SEC ($1\frac{1}{2}$ MIN) SEE PLATE B-87, SHEET 3

SUBMERGENCE: ASSUME 34 FT. (80% TIME OK LESS)

STROKE OF PISTON: 10.768 FT.

NOMENCLATURE		MODEL (CLAIBORNE L.)		PROPOSED LOCK		FACTOR
LENGTH GATE	L	48.0	L_1	48.0	$\frac{L_1}{L}$	1.0
SUBMERGENCE	S S_2	23.6' 23.6	S_1	34.0	$\frac{S_1}{S_2}$	1.441
TIME	T T_2	109 109	T_1	90	$\frac{T_2}{T_1}$	1.211
ARC OF TRAVEL	K	71.567°	K_1	71.567°	$\frac{K}{K_1}$	1.00

SINCE LENGTH OF GATE, ARC OF TRAVEL, AND CLEARANCE UNDER GATE ARE THE SAME ON MODEL AND PROPOSED LOCK, NO ADJUSTMENTS ARE REQUIRED, FOR THESE FACTORS.

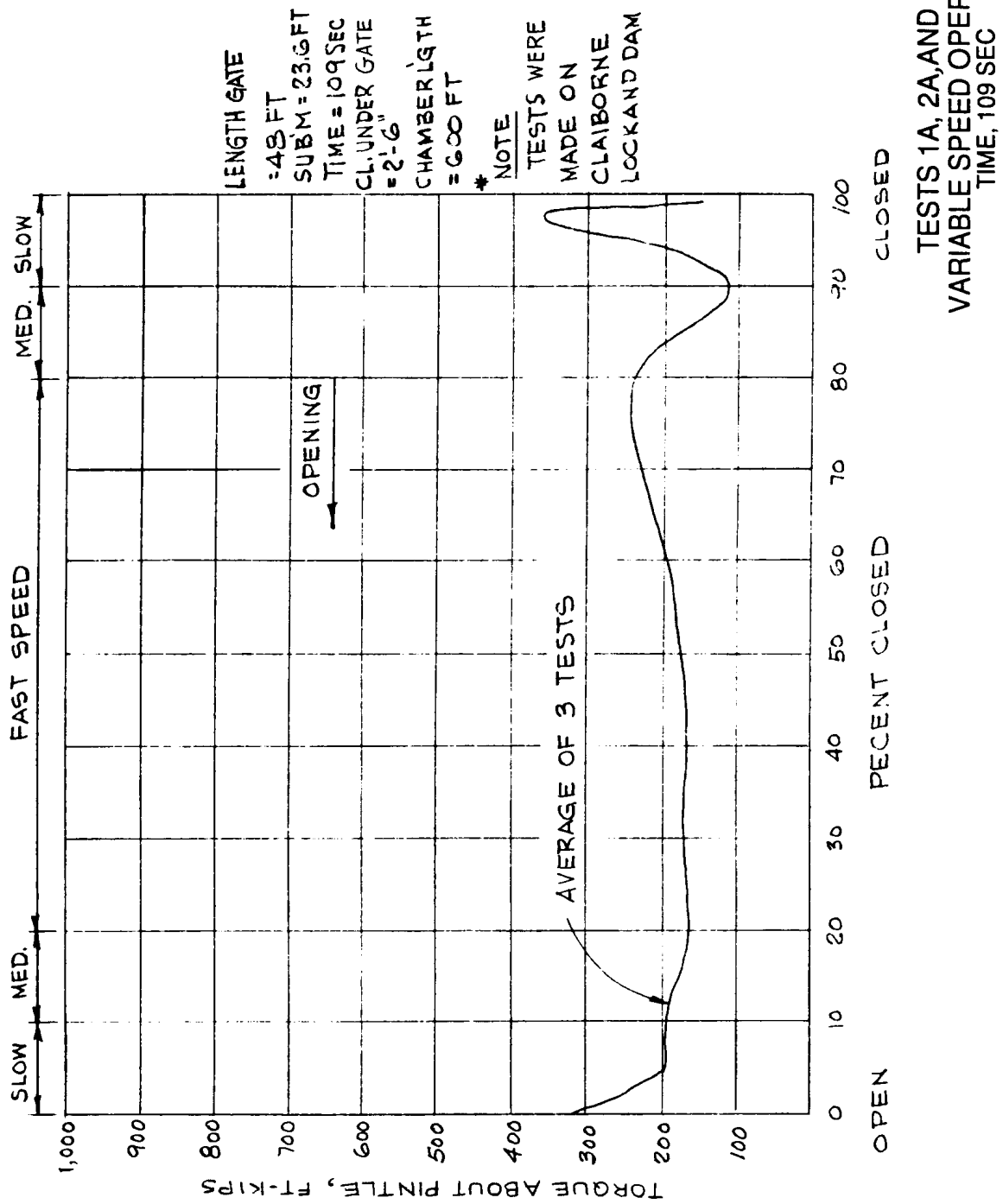

TESTS 1A, 2A, AND 3A
VARIABLE SPEED OPERATION
TIME, 109 SEC

OPENING GATE

$$P_1 = P\left(\frac{L_1}{L}\right)^4\left(\frac{S_1}{S_2}\right)^{1.7}\left(\frac{T_2}{T_1}\right)^{1.3}$$

$$= P(1.0)^4(1.441)^{1.7}(1.211)^{1.3} = P \times 1.86 \times 1.283$$

$$P_1 = 2.39 \times P$$

CLOSING GATE

NOMENCLATURE		MODEL (CLAIBORNE L.)		PROPOSED LOCK		FACTOR
LENGTH GATE	L	48.0 FT	L_1	48.0 FT	$\frac{L_1}{L}$	1.0
SUBMERGENCE	S S_2	23.6 23.6	S_1	34.0	$\frac{S_1}{S}$	1.441
TIME	T T_2	140 SEC 140 SEC	T_1	113	$\frac{T_2}{T_1}$	1.24
ARC OF TRAVEL	K	71.567	K_1	71.565	$\frac{K}{K_1}$	1.0

$$P_1 = P\left(\frac{L_1}{L}\right)^4\left(\frac{S_1}{S}\right)^{1.5}\left(\frac{T_2}{T_1}\right)^{1.1}$$

$$= P(1.0)^4(1.441)^{1.5}(1.24)^{1.1} = P \times 1.0 \times 1.73 \times 1.267$$

$$P_1 = 2.19\,P$$

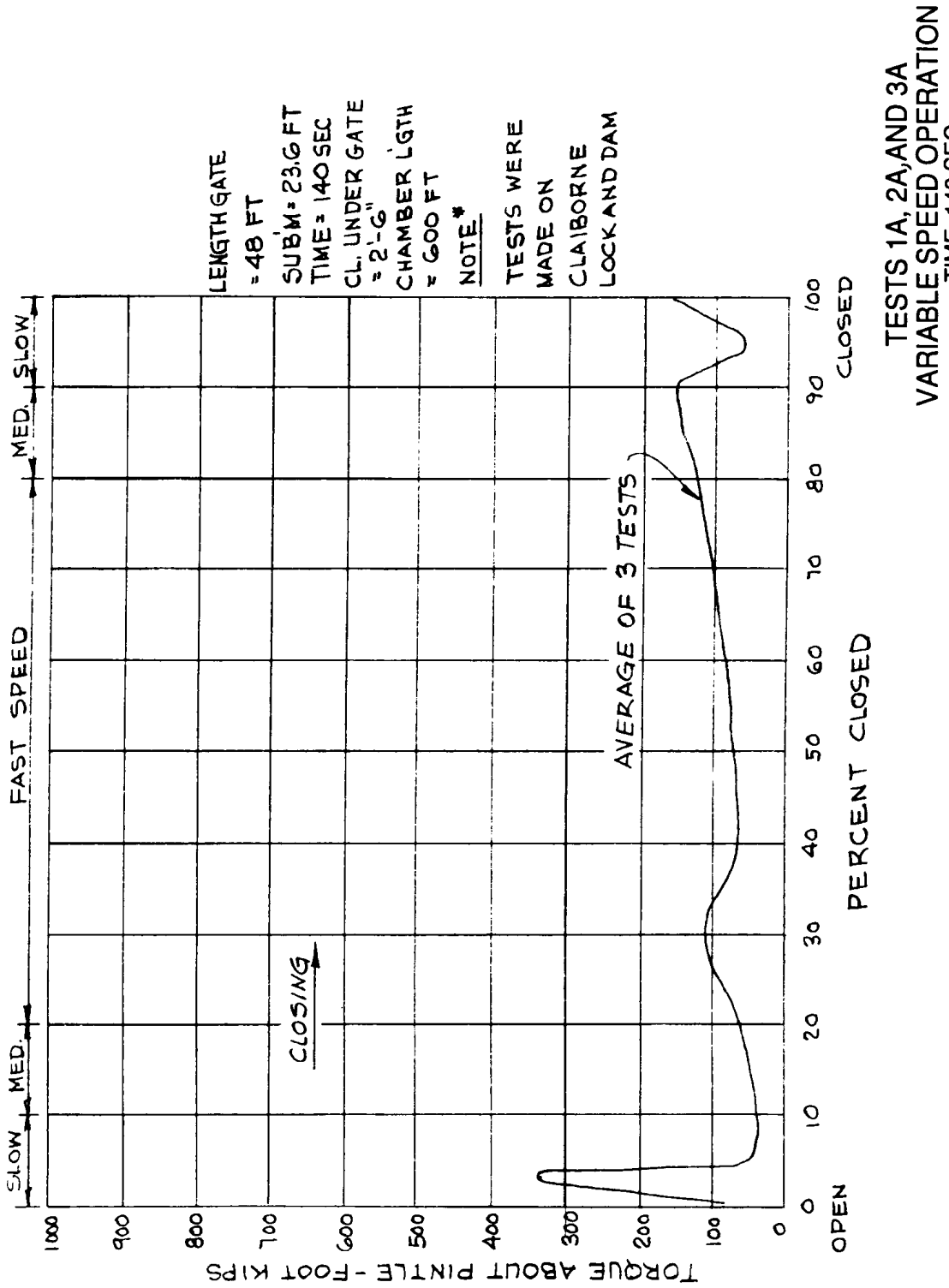

TESTS 1A, 2A, AND 3A
VARIABLE SPEED OPERATION
TIME, 140 SEC

PLATE B-87
(SHEET 5 OF 10)

OPENING GATE

REQUIRED TORQUE										AVAILABLE TORQUE		
1	2	3	4	5	6	7	8	9	10	11	12	13
POS	MODEL TORQUE (CLAIBORNE) (FT-KIPS)	ADJ FACTOR	TORQUE ABT PINTLE (PROPOSED L) FT-KIPS 2 X 3	EFFECT. ARM ABOUT PINTLE (FT)	FORCE ON PISTON ROD (ROD END) KIPS 4÷5÷0.97*	NET AREA HEAD END (SQ IN)	RETARDING FORCE DUE TO 50-PSI FRICT. KIPS 7 X 50 PSI	REQ'D FORCE ROD END KIPS 6+8	REQ'D CYL PRESS. ROD END PSI 9÷150.83**	AVAIL. CYL PRESS. PSI	AVAIL. PISTON FORCE KIPS 11 X 150.83 X 0.97 ÷ 1000 − 8	AVAIL. TORQUE ABOUT PINTLE FT-KIPS 12 X 5
CLOSED 10	0	2.39	0	7.4792	0	201.1	10.1	0	0	850	114.3	854.6
9½	360		860.4	7.6790	112.0			122.1	810			877.4
9	115		274.8	7.8958	35.9			45.9	305			902.2
8	230		549.7	8.2917	68.3			78.4	520			947.4
7	225		537.8	8.6250	64.3			74.3	493			985.5
6	185		442.1	8.8958	51.2			61.2	407			1016.4
5	175		418.3	9.1042	47.4			57.5	381			1040.2
4	170		406.3	9.2083	45.5			55.6	369			1052.1
3	175		418.3	9.1875	46.9			57.0	378			1049.7
2	160		382.4	8.9792	43.9			54.0	358			1025.9
1	190		454.1	8.4688	55.3			65.4	433			967.6
0	315		752.8	7.4792	103.8			113.9	755			854.6

OPEN

* 0.97-EFFIC MACHINE
** AREA ROD END = 150.83 IN²

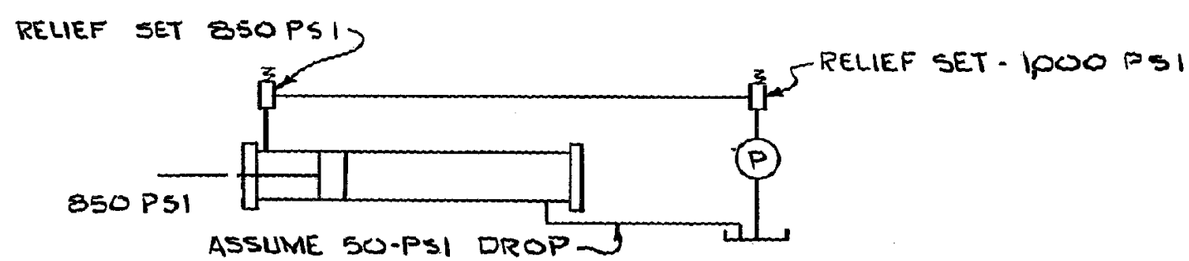

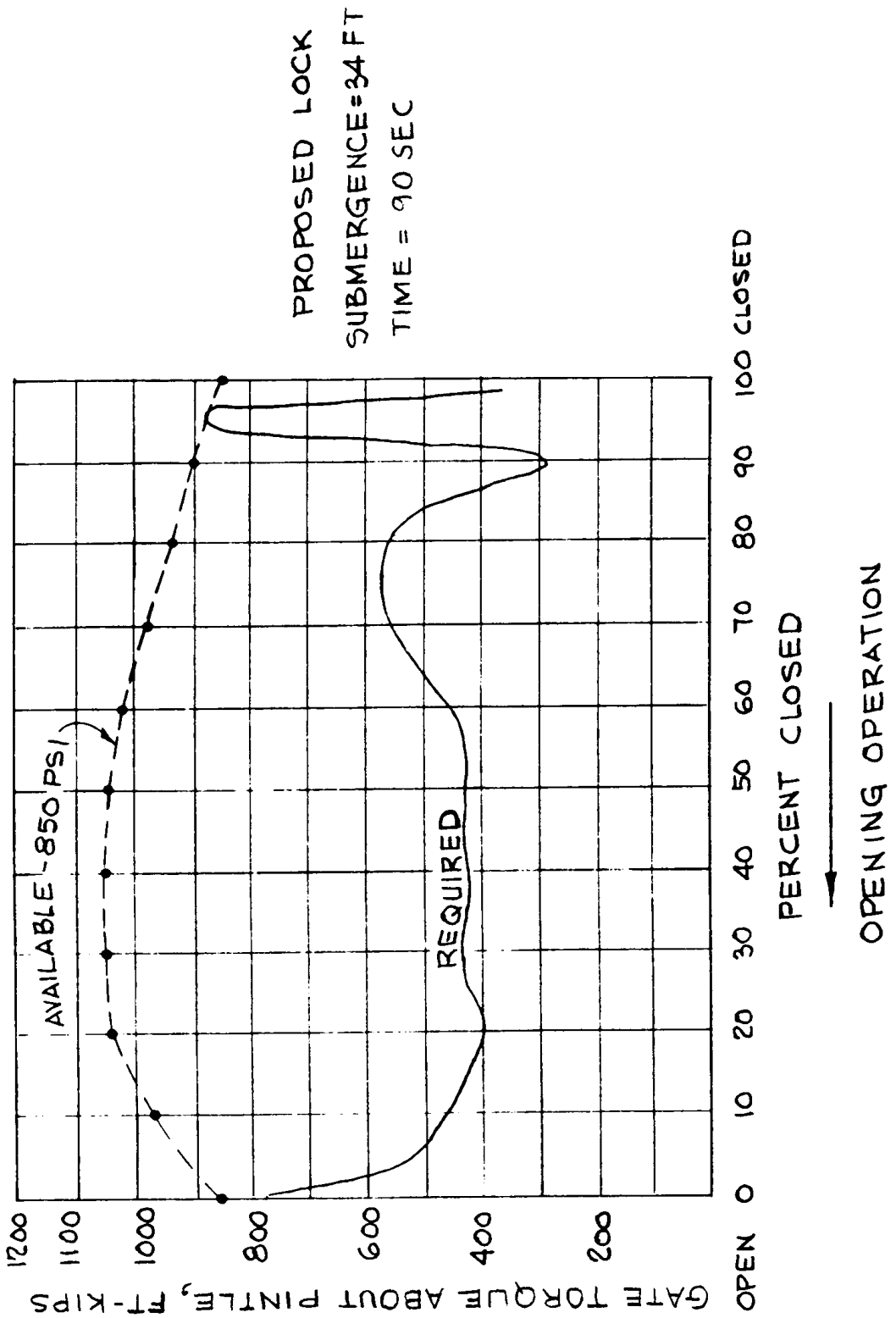

PLATE B-87
(SHEET 7 OF 10)

CLOSING GATE

REQUIRED TORQUE										AVAILABLE TORQUE		
(1)	(2)	(3)	(4)	(5)	(6)	(7)	(8)	(9)	(10)	(11)	(12)	(13)
POS	MODEL TORQUE (CLAIBORNE) (FT. KIPS)	ADJ FACTOR	TORQUE ABT. PINTLE (PROPOSED L.) FT-KIPS (2) x (3)	EFFECT. ARM ABOUT PINTLE (FT)	FORCE ON PISTON ROD (HEAD END) KIPS (4)÷(5)÷0.97*	NET AREA ROD END (SQ IN)	RETARDING FORCE DUE TO 100-PSI FRICT. KIPS (7)x100 PSI	REQ'D FORCE HEAD END KIPS (6)+(8)	REQ'D CYL PRESS. HEAD END PSI (9)÷200.1**	AVAIL. CYL PRESS. PSI	AVAIL. PISTON FORCE KIPS (11)x200.1** x 0.97÷1000-(8)	AVAIL. TORQUE ABOUT PINTLE FT-KIPS (12)x(5)
OPEN 0	0	2.19	0	7.4792	0	150.83	0	0	0	550	91.7	686
½	330		722.7	8.0790	92.2		15.1	107.3	534			741
1	35		76.7	8.4688	9.3			24.4	121			777
2	65		142.5	8.9792	16.4			31.5	157			823
3	110		240.9	9.1875	27.0			42.1	209			842
4	70		153.3	9.2083	17.2			32.3	161			844
5	75		164.3	9.1042	18.6			33.7	168			835
6	85		186.2	8.8958	21.6			36.7	182			816
7	100		219.0	8.6250	26.1			41.3	206			791
8	125		273.8	8.2917	34.0			49.1	245			760
9	160		350.4	7.8958	45.8			60.9	304			724
10	165		361.4	7.4792	49.8			64.9	324			686

CLOSED

* 0.97 - EFFIC MACHINE
** AREA HEAD END = 200.1

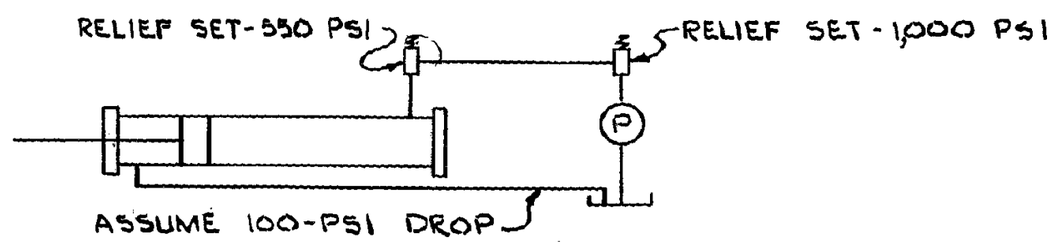

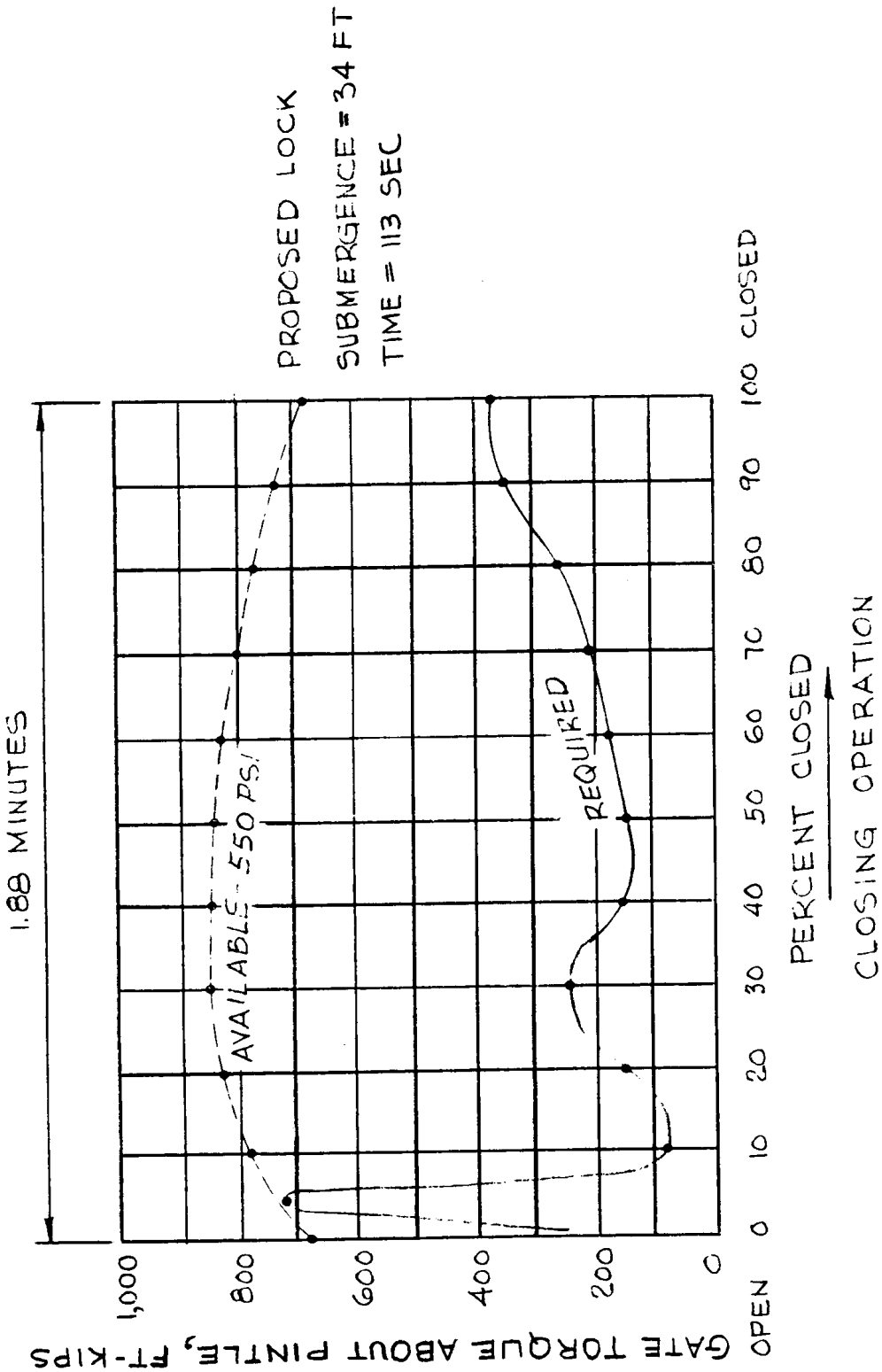

PLATE B-87
(SHEET 9 OF 10)

PUMP CAPACITY:

USE 90 SEC OPERATING TIME-OPENING-SEE PLATE **B-87 SHEET 2**

NET AREA – ROD END = 150.83 □"

$$GPM = \frac{150.83 \times 12 \times 0.1459 \times 60}{231} = 68.6 \text{ FAST SPEED}$$

$$GPM = 68.6 \times 0.8 = 54.9 \text{ MED SPEED}$$

$$GPM = 68.6 \times 0.3 = 20.6 \text{ SLOW SPEED}$$

USE VARIABLE VOLUME PUMP WITH AT LEAST 4 SETTINGS, "NEUTRAL", "SLOW", "MEDIUM", AND "FAST", WITH PUMP DELIVERIES AS SHOWN ABOVE.

DETERMINATION OF LOADS REQUIRED TO RAISE UPSTREAM LEAF (MOVABLE SILL) OF A DOUBLE-LEAF VERTICAL-LIFT GATE:

A. WEIGHT OF UPSTREAM LEAF

B. WEIGHT OF SILT ON UPSTREAM LEAF

C. SLIDING FRICTION OF GATE ON RUBBING STRIPS

D. DOWNWARD HYDROSTATIC LOAD

E. WEIGHT OF RECESS PROTECTION AND TRASH SCREENS LESS WEIGHT OF WATER DISPLACED

F. SIDE SEAL FRICTION

VERTICAL LIFT GATES,
DETERMINATION OF LOADS
FOR UPSTREAM LEAF

PLATE B-88
(SHEET 1 OF 9)

A. WEIGHT OF UPSTREAM GATE

FROM PRELIMINARY CALCULATIONS, WEIGHT OF 14'×110' GATE WAS ESTIMATED TO BE 185,000 LB

WT OF WATER DISPLACED $= \frac{185{,}000 \times 62.4}{489} = 23{,}600$ LB

TOTAL WEIGHT TO BE LIFTED = 185,000 − 23,600 = 161,400 LB

B. WEIGHT OF SILT (IN AIR)

WEIGHT OF SILT = 125 LB/FT³

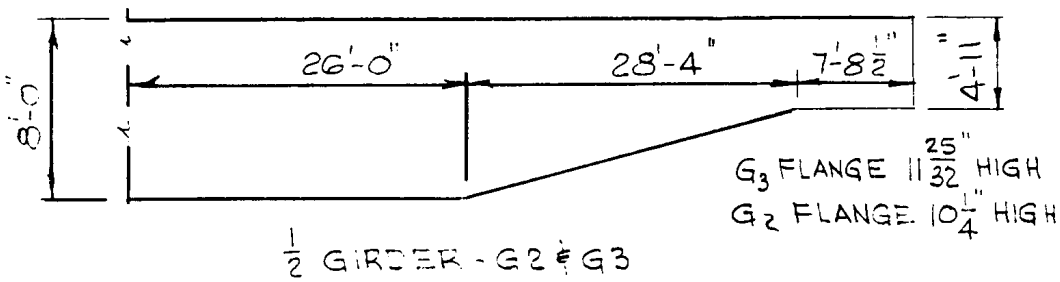

½ GIRDER - G2 & G3

WT OF SILT ON GIRDER G1 IS CONSIDERED NEGLIGIBLE

WT OF SILT ON GIRDER G2

$$W_{G2} = \left[2(125)\frac{10.25}{12}\right]\left[(26.0)(8.0) + \left(\frac{8.0+4.92}{2}\right)(28.33) + (7.71)(4.92)\right]$$

$$= [214]\left[(208) + (183) + (38)\right]$$

$$= (214)(429^{\square\,FT.}) = \underline{91{,}800 \text{ LB}}$$

$$W_{G3} = \left[\frac{(214)(11.78)}{10.25}\right](429) = (246)(429) = \underline{105{,}500 \text{ LB}}$$

$$W_{G1,G2,G3} = 91{,}800 + 105{,}500 = \underline{\underline{197{,}300 \text{ LB}}}$$

C. SLIDING FRICTION OF GATE ON RUBBING STRIPS

SLIDING FRICTION $L_G = P_H A_V C_G H$

P_H = HYDROSTATIC PRESSURE PER FOOT OF HEAD

A_V = AREA OF UPSTREAM SKIN PLATE – SQ FT

C_G = COEF OF FRICTION FOR STEEL ON STEEL, ASSUMED TO BE 0.40

H = SWELL HEAD, ASSUMED TO BE 1.0 FT

$L_G = (62.4)(113.16 \times 13)(0.40)(1.0) = 36{,}718$ LB

D. DOWNWARD HYDROSTATIC LOAD

DOWNWARD LOAD = $L_D = P_H A_T H$

P_H = HYDROSTATIC PRESSURE PER FOOT OF HEAD

A_T = AREA, TOP OF GATE – SQ FT

H = SWELL HEAD, ASSUMED TO BE 1.0 FT

$L_D = (62.4)[(54.71)(8.0)+(6.56)(1.44)+(4.4)(5.0)][2]$

$= (62.4)[437+9.0+22.0][2]$

$= 58{,}400$ LB

E. WT OF RECESS PROTECTION AND TRASH SCREEN MINUS WT OF WATER DISPLACED.

TRASH SCREENS AND RECESS PROTECTION = 18,200 LB*

WT OF DISPLACEMENT = $\frac{18{,}200}{489} \times 62.4$ = 2,320

NET WEIGHT = 15,900 LB

*ESTIMATE FROM PREVIOUS JOB

F. SIDE SEAL FRICTION

$$L_S = \frac{1}{2} P_H A_S C_S H + P_{PRESET} C_S$$

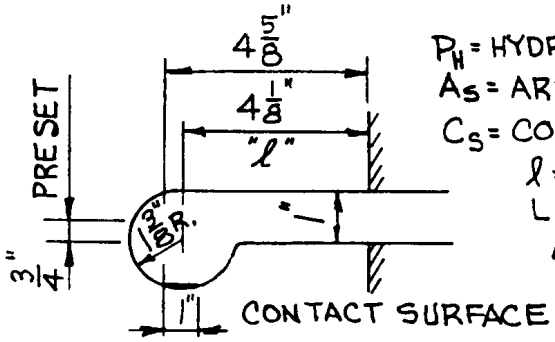

P_H = HYDROSTATIC PRESSURE PER FOOT OF HEAD.
A_S = AREA OF SEAL SUBJECT TO DIFF HEAD
C_S = COEF OF FRICTION, RUBBER ON STEEL = 1.0
ℓ = LENGTH OF CANTILEVER = $4\frac{1}{8}$"
L = LENGTH OF SEAL
Δ = DEFLECTION (PRESET = $\frac{3}{4}$")
E = MOD ELASTICITY-RUBBER 60 DURO. = 2,000 PSI
t = 1"

FORCE DUE TO SEALS ON SIDE (FOR 1 FT)

$$P_{PRESET} = L\left(\frac{3\Delta EI}{\ell^3}\right) = L\left(\frac{3(\frac{3}{4})(2{,}000)(\frac{1}{12})(12)(1)^3}{4.125^3}\right) = L(64.2)$$

$$L = (2 \text{ SIDES})(13'\text{-}7") = 2 \times 13.58 = 27.16$$

$$P_{PRESET} = (27.16)(64.2) = \underline{\underline{1747}} \text{ LB}$$

$$L_S = \frac{1}{2} P_H A_S C_S H + P_{PRESET} C_S \qquad A_S = \left(\frac{4.63}{12}\right)(27.16) = 10.5 \ \square \text{ FT}$$

$$L_S = \frac{1}{2}(62.4)(10.5)(1.0)(1.0) + (1747)(1.0)$$

$$L_S = 328 + 1{,}747 = 2{,}075 \text{ LB} \quad \text{(SIDE SEALS)}$$

FORCE DUE TO SEALS IN RECESS (DISREGARD PRESET)

$$L = 4(7'\text{-}4\tfrac{1}{2}") + 2(5'\text{-}0") = 4(7.38) + 2(5.00) = 39.5 \text{ FT}$$

$$A_S = \left(\frac{5.50}{12}\right)(39.5) = 18.1 \ \square \text{ FT}$$

$$L_S = \frac{1}{2} P_H A_S C_S H = \left(\frac{1}{2}\right)(62.4)(18.1)(1.0)(1.0) = 565 \text{ LB}$$

TOTAL SIDE-SEAL FRICTION

$$L_S = 2{,}075 + 565 = \underline{2{,}640 \text{ LB}}$$

HOIST REEVING FOR RAISING UPSTREAM EMERGENCY GATE.

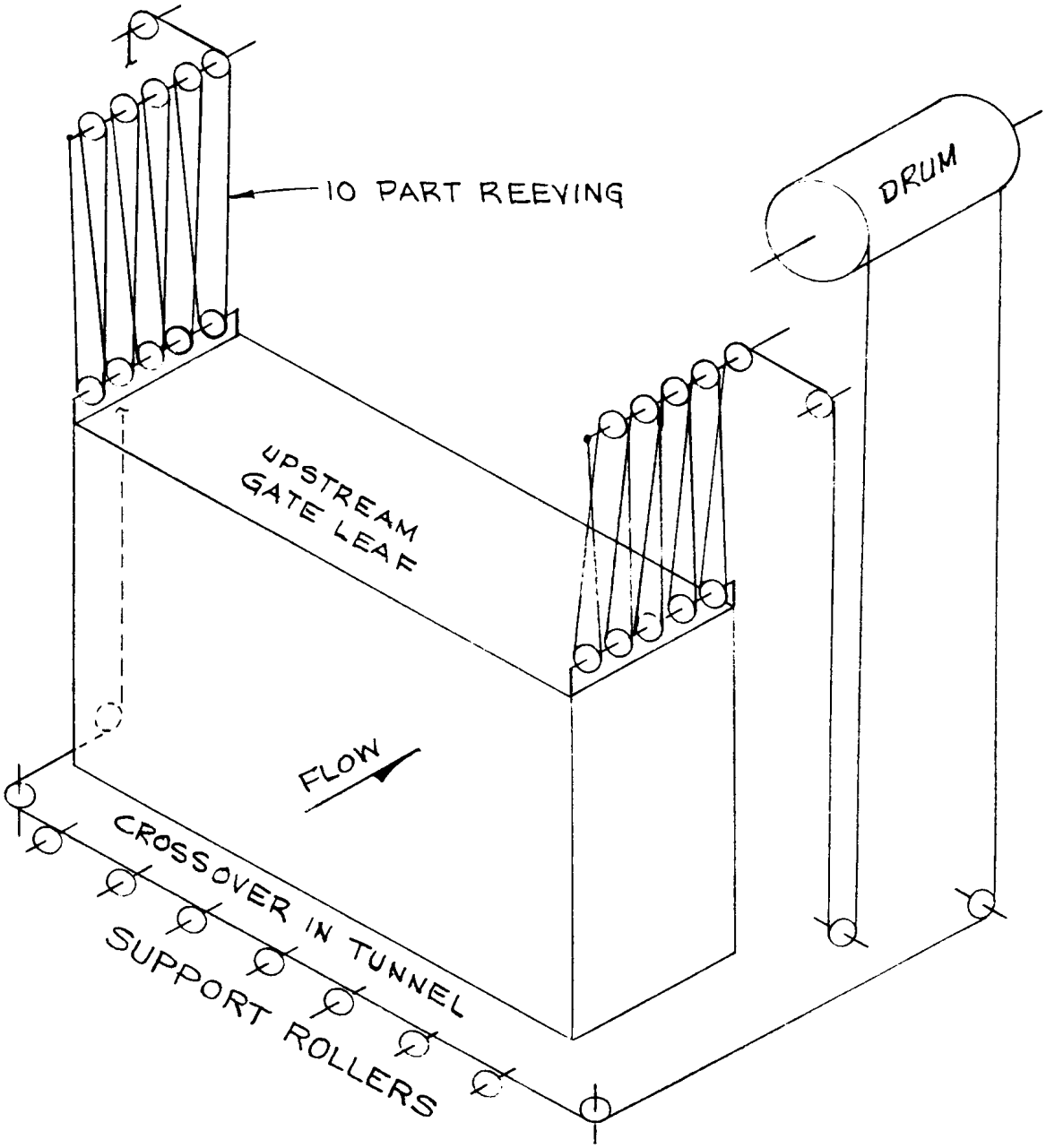

PLATE B-88
(SHEET 5 OF 9)

LOAD IN ROPE THROUGH SHEAVES

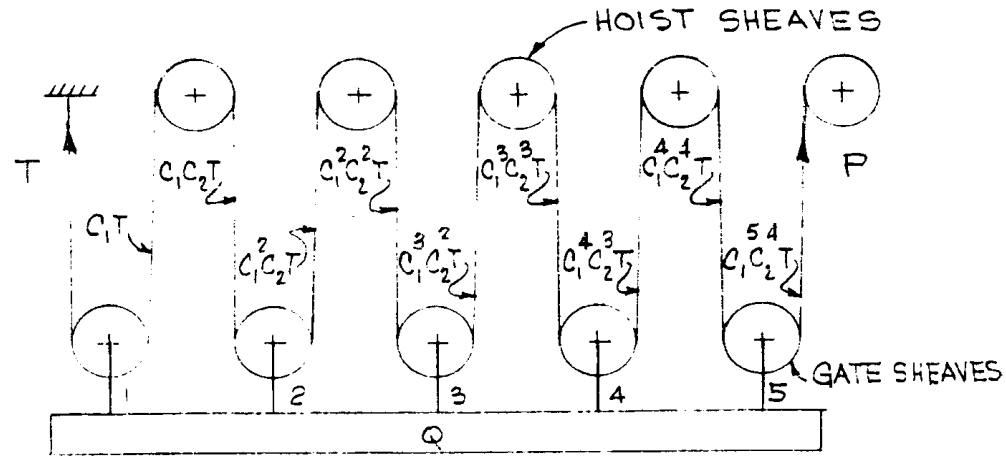

$C_1 = 1.087 \quad C_2 = 1.012$ (SEE PLATE B-89, SHEET 12)

$$Q = T + C_1T + C_1C_2T + C_1^2C_2T + C_1^2C_2^2T + C_1^3C_2^2T + C_1^3C_2^3T + C_1^4C_2^3T + C_1^4C_2^4T + C_1^5C_2^4T$$

$$= [1 + 1.087 + (1.087)(1.012) + (1.087)^2(1.012) + (1.087)^2(1.012)^2 + (1.087)^3(1.012)^2 + (1.087)^3(1.012)^3 + (1.087)^4(1.012)^3 + (1.087)^4(1.012)^4 + (1.087)^5(1.012)^4]\,T$$

$$= [1.00 + 1.087 + 1.10 + 1.196 + 1.210 + 1.315 + 1.331 + 1.447 + 1.464 + 1.592]\,T = 12.742\,T$$

$$T = \frac{Q}{12.742}$$

$$F = C_1^5C_2^4T = (1.087)^5(1.012)^4\,\frac{Q}{12.742}$$

$$= (1.518)(1.049)\,\frac{Q}{12.742} = Q/8.00$$

DRUM LOAD FROM IDLER SIDE

$$P_{DRUM} = C_5 \, C_3^{*5} \, P$$

$$= (1.008)(1.028)^5 P$$

$$= \frac{(1.008)(1.148)}{8.00} Q$$

$$= \frac{Q}{6.91}$$

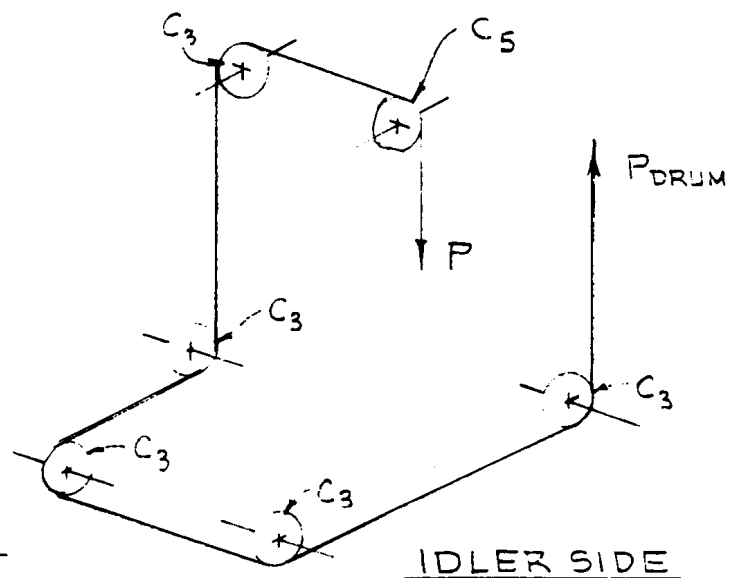

IDLER SIDE

REEVING EFF

$$= \frac{6.91 \times 100}{10 \text{ SHEAVES}}$$

$$= 69.1\%$$

DRUM LOAD FROM MACHINERY SIDE

$$P_{DRUM} = C_5 \, C_3^* \, C_4^* \, P$$

$$= (1.008)(1.028)(1.033) \frac{Q}{8.00}$$

$$= \frac{1.070}{8.00} Q = \frac{Q}{7.47}$$

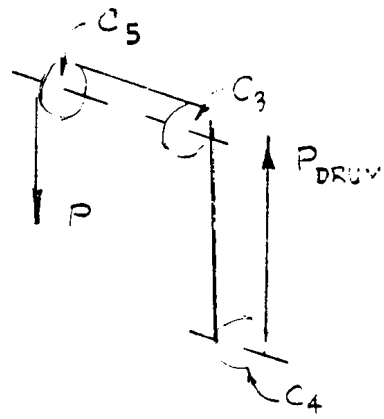

MACHINERY SIDE

REEVING EFF

$$= \frac{7.47 \times 100}{10} = 74.7\%$$

* C_3, C_4 AND C_5 SEE PLATE B-89, SHEETS 12, 13, AND 15

TOTAL LOAD ON HOIST TO RAISE GATE

CONDITION I

DEAD WEIGHT OF GATE IN AIR	185.0 KIPS
SIDE-SEAL PRESET AND TRASH SCREEN WEIGHT	2.6
WEIGHT OF SILT	197.3
TOTAL LOAD	384.9 KIPS

CONDITION II

WEIGHT OF UPSTREAM LEAF IN WATER	161.4 KIPS
WEIGHT OF SILT (IN WATER) $197.3\left(\frac{125-62.4}{125}\right)$	98.8
SLIDING FRICTION	36.7
DOWNWARD HYDROSTATIC LOAD	58.4
WEIGHT OF RECESS PROTECTION AND TRASH SCREENS	15.9
SIDE SEAL FRICTION	2.6
TOTAL LOAD FOR DESIGN	373.8 KIPS
	SAY 385.0 (COND. I)

LOAD ON HOIST ROPES AT DRUM

$$P_{DRUM\ IDLER} = \frac{Q}{6.91} = \frac{\frac{385.0}{2}}{6.91} = 27.9 \text{ KIPS}$$

$$P_{DRUM\ MACHINERY} = \frac{Q}{7.47} = \frac{\frac{385.0}{2}}{7.47} = 25.8 \text{ KIPS}$$

$$P_{DRUM\ TOTAL} = 27.9 + 25.8 = \underline{53.7 \text{ KIPS}} \text{ (DESIGN LOAD)}$$

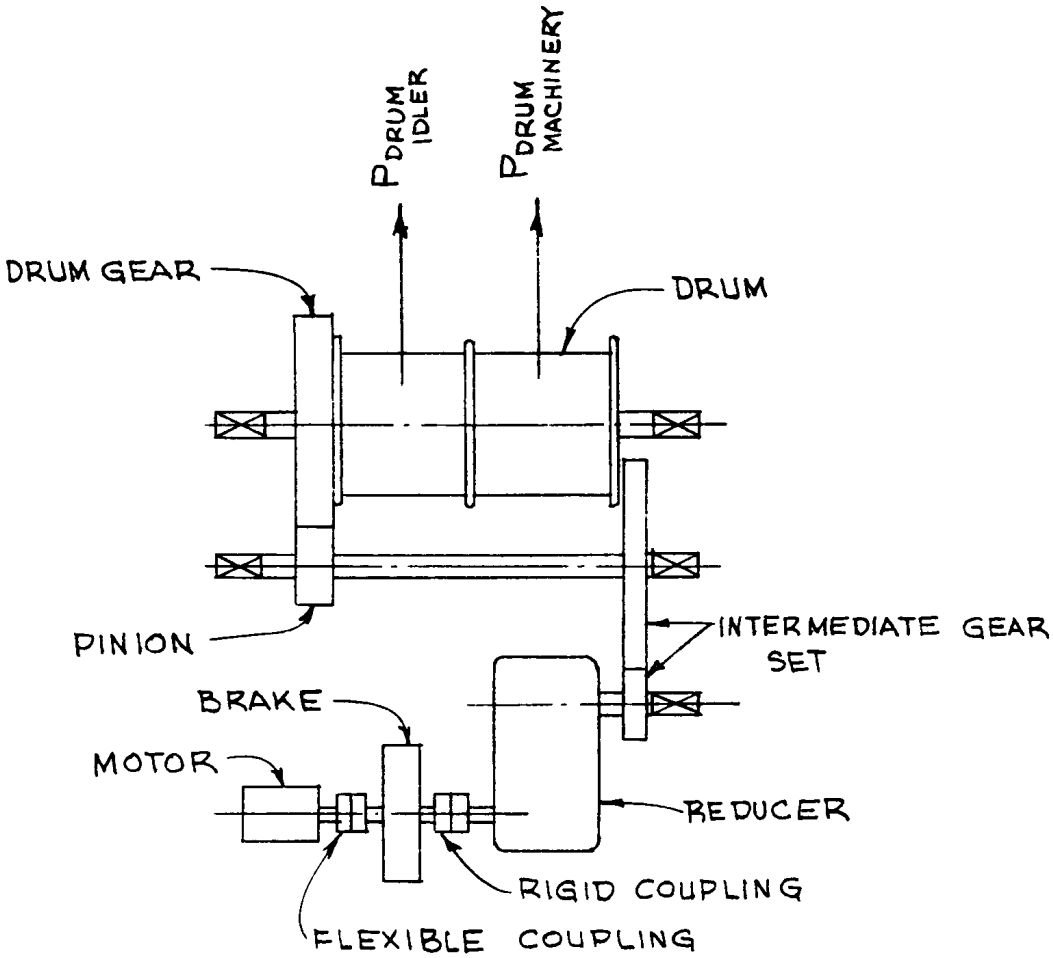

UPSTREAM GATE

HOIST

GENERAL LAYOUT OF HOIST MACHINERY

DETERMINATION OF LOADS REQUIRED TO RAISE DOWNSTREAM LEAF OF A DOUBLE-LEAF VERTICAL LIFT GATE.

A. WEIGHT OF DOWNSTREAM LEAF.

B. WEIGHT OF SILT ON DOWNSTREAM LEAF.

C. HORIZONTAL FORCE ON GATE LEAF (HYDRAULIC)

D. VERTICAL FORCE ON GATE LEAF (HYDRAULIC)

E. GENERAL REEVING LAYOUT FOR DOWNSTREAM GATE

F. LOADS ON HOIST ROPE AT DRUM

G. GENERAL LAYOUT OF MACHINE.

VERTICAL LIFT GATES
DETERMINATION OF LOADS
FOR DOWNSTREAM LEAF

PLATE B-89
(SHEET 1 OF 19)

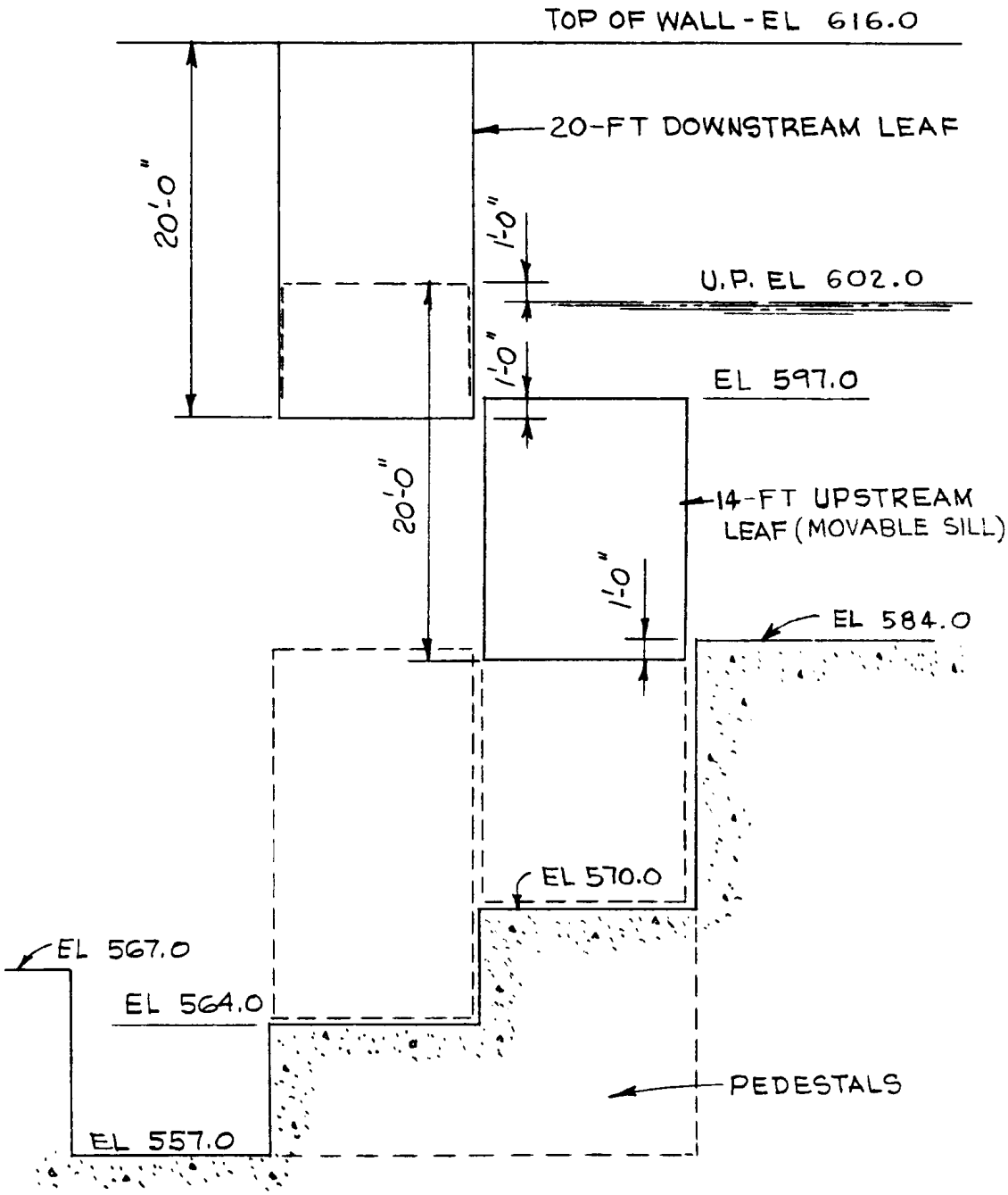

VERTICAL-LIFT GATES
WITH UPSTREAM MOVABLE SILL

PLATE B-89
(SHEET 2 OF 19)

A. WEIGHT OF DOWNSTREAM LEAF

FROM PRELIMINARY CALCULATIONS, WEIGHT OF 20'×110' GATE WAS ESTIMATED TO BE 467,000 LB

B. WEIGHT OF SILT.

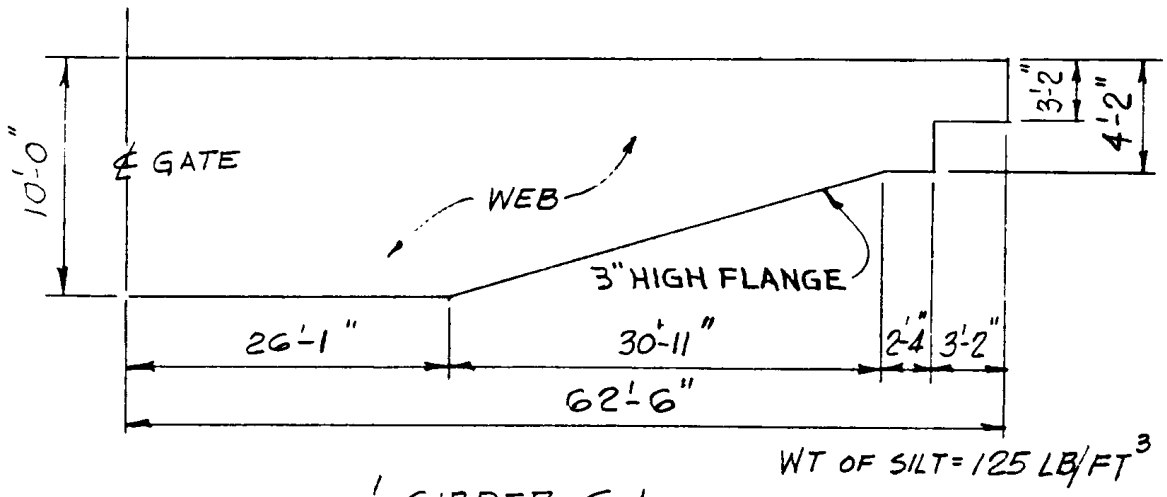

½ GIRDER G-1

WT OF SILT ON G-1

$$W_{G-1} = 2(125)\left(\frac{3}{12}\right)\left[(26.08)(10.0)+\left(\frac{10.0+4.17}{2}\right)(30.92)+(4.17)(2.33)+(3.17)(3.17)\right]$$

$$=(62.5)\left[260.8+219.07+9.7+10.0\right]$$

$$= 62.5\times 499.57 = \underline{31{,}223 \text{ LB}}$$

WT OF SILT (CON'TD)

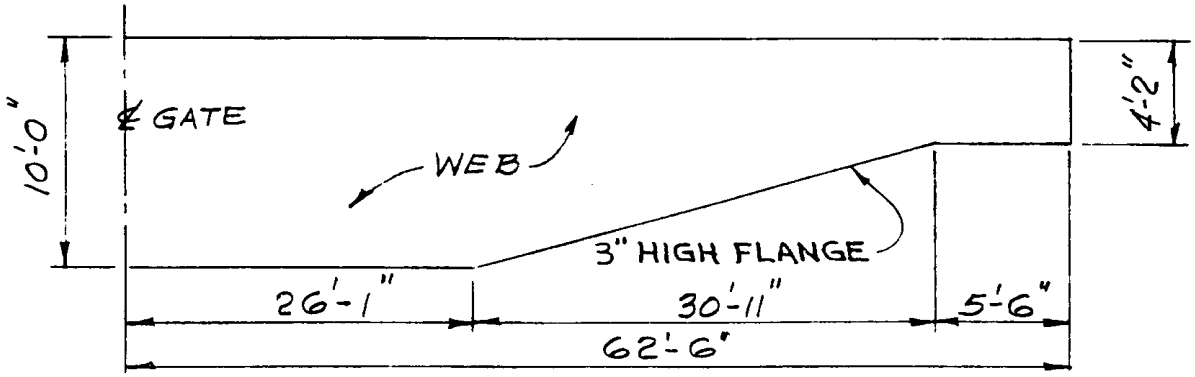

$\frac{1}{2}$ GIRDER G-2, G-3, AND G-4

WT. OF SILT ON G-2, G-3, AND G-4

$$= (3)(2)(125)\left(\frac{3}{12}\right)\left[(26.08)(10.0) + \left(\frac{10.0 + 4.17}{2}\right)(30.92) + (5.50)(4.17)\right]$$

$$= (187.5)\left[260.8 + 219.1 + 22.9\right]$$

$$= 187.5 \times 502.8 = \underline{94{,}275 \text{ LB}}$$

TOTAL WT OF SILT ON GATE = 31,223 + 94,275 = 125.5 KIPS

DEAD WT OF DOWNSTREAM LEAF (TOTAL)

WT = 467.0 + 125.5 = 593.0 KIPS

C. HORIZONTAL FORCE ON GATE LEAF (HYDRAULIC)

USING THE DATA SUPPLIED BY HYDRAULICS BRANCH IN GREEN UP NAVIGATION DAM-ANALYSIS OF HYDRODYNAMIC FORCES ACTING ON EMERGENCY GATE (DATED 7/15/54) AND SUPPLEMENTING THEIR TABLES WITH INTERMEDIATE VALUES, THE HORIZONTAL FORCES ON EMERGENCY GATE VS. FEET GATE RAISED WERE COMPUTED FOR THIS LOCK AND ARE AS FOLLOWS:

AS SOON AS THE EMERGENCY GATE IS LIFTED THE WEIR BECOMES SHARP CRESTED. USE C = 3.5

Q = FLOW IN CFS
L = WIDTH OF WEIR
H = HEIGTH OF WATER ABOVE WEIR

$Q = CL(H)^{\frac{3}{2}}$ (USE END CONTRACTION SUPPRESSED TO GIVE MAX. Q - HANDBOOK OF HYDRAULICS BY KING AND BRATER, PAGE 5-3

$Q = (3.5)(110)(H)^{\frac{3}{2}} = 385\,(H)^{\frac{3}{2}}$

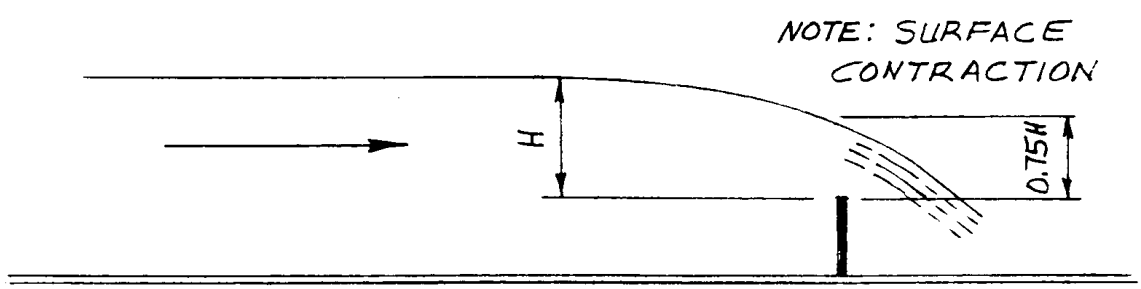

1	2	3	4	5	6
EMERGENCY GATE RAISED (FT)	ELEVATION TOP OF GATE	H = 602 − (2)	$(H)^{\frac{3}{2}}$	3.5 L = 3.5×110	Q = 3.5 L $(H)^{\frac{3}{2}}$ = (4) × (5)
0	584	18	76.36	385	29,401
1	585	17	70.09		26,980
2	586	16	64.00		24,640
3	587	15	58.09		22,360
4	588	14	52.38		20,170
5	589	13	46.87		18,040
6	590	12	41.57		16,000
7	591	11	36.50		14,060
8	592	10	31.62		12,170
9	593	9	27.00		10,400
10	594	8	22.63		8,713
11	595	7	18.60		7,160
12	596	6	14.70		5,659
13	597	5	11.20		4,312
14	598	4	8.00		3,080
15	599	3	5.20		2,000
16	600	2	2.83		1,089
17	601	1	1.00		385
18	602	0	0		0

HORIZONTAL FORCE ON EMERGENCY GATE (CON'T'D)

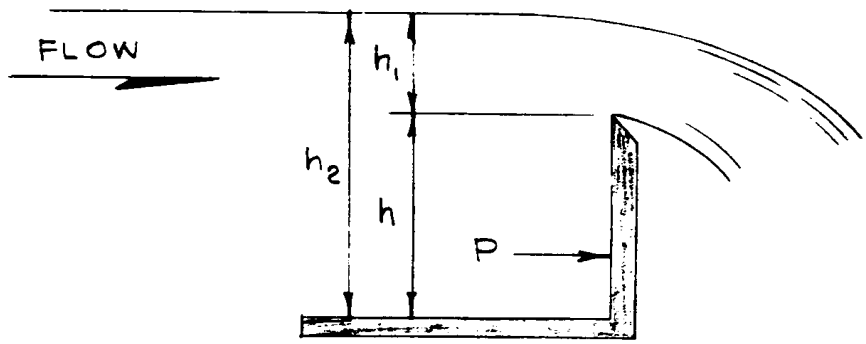

THE FORCE ON THE EMERGENCY GATE WAS COMPUTED USING THE FORMULAS FOR LOADS ON "SHARP-CRESTED WEIRS" FROM ENGINEERING FOR DAMS, VOL. 2 (1945) BY HINDS, CREAGER, AND JUSTIN, PAGES 255-257.

$$P = \frac{1}{2} h_2^2 \omega_2 - \frac{q}{g} \omega_2 \left(K \sqrt{2 g h_1} - \frac{q}{h_2} \right)$$

P' = TOTAL HORIZONTAL LOAD ON GATE

P = HORIZONTAL LOAD ON 1-FT WIDTH OF GATE

h_2 = UPSTREAM HEAD IN FEET

ω_2 = WEIGHT OF WATER - 62.4 LB/CU FT

q = FLOW IN 1-FT OF CHANNEL (SEE PRECEDING PAGE)

g = ACCELERATION DUE TO GRAVITY - 32.2 FT/SEC/SEC

K = 0.81 (DETERMINED BY EXPERIMENT)

h_1 = UPSTREAM HEAD ABOVE WEIR (SEE H, COL 3 OF PRECEDING PAGE)

1	2	3	4	5	6	7	8	9	10	11	12	13	14	15
GATE RAISED (FT) h	Q (CFS)	$q = \frac{Q}{110}$	$\frac{\omega_2}{g} q = 1.938$ (3)	$h_1 = h_2 - h = 18 - (1)$	$\sqrt{h_1}$	$K\sqrt{2g}\sqrt{h_1} = 6.49$ (6)	h_2	$\frac{q}{h_2}$ (3)/(8)	$K\sqrt{2gh_1} - \frac{q}{h_2}$ (7)-(9)	$\frac{q}{g}\omega_2\left(K\sqrt{2gh} - q/h_2\right)$ (4)x(10)	$\frac{\frac{1}{2}h_2^2}{2}$ (8)^2	$\frac{1}{2}h_2^2 \times \omega_2$ (12)x624	P(1FT) (13)-(11)	P' (TOTAL LOAD) (14)x110'
0	29,400	267	518	18	4.24	27.5	18	14.8	12.7	6,561	162	10,109	3,548	390 KIPS
1	26,980	246	477	17	4.12	26.7		13.7	13.0	6,200			3,909	430
2	24,640	224	434	16	4.00	26.0		12.5	13.5	5,860			4,249	467
3	22,360	204	395	15	3.87	25.2		11.3	13.9	5,490			4,619	508
4	20,170	184	357	14	3.74	24.3		10.2	14.1	5,030			5,079	559
5	18,040	164	318	13	3.61	23.4		9.1	14.3	4,550			5,559	611
6	16,000	145	281	12	3.46	22.5		8.1	14.4	4,040			6,069	667
7	14,060	128	248	11	3.32	21.6		7.1	14.5	3,600			6,509	716
8	12,170	111	215	10	3.16	20.5		6.2	14.3	3,070			7,039	774
9	10,400	95	184	9	3.00	19.5		5.3	14.2	2,610			7,499	825
10	8,713	79	153	8	2.83	18.4		4.4	14.0	2,140			7,969	876
11	7,160	65	126	7	2.65	17.2		3.6	13.6	1,710			8,399	923
12	5,659	51	99	6	2.45	15.9		2.8	13.1	1,300			8,809	968
13	4,320	39	76	5	2.24	14.6		2.2	12.4	942			9,167	1,008
14	3,080	28	54	4	2.00	13.0		1.6	11.4	615			9,494	1,043
15	2,000	18	35	3	1.73	11.2		1.0	10.2	480			9,629	1,060
16	1,089	9.9	19	2	1.41	9.2		0.6	8.6	164			9,945	1,093
17	385	3.5	6.8	1	1.0	6.5		0.2	6.3	43			10,066	1,108
18	0	0	0	0	0	0	0	0	0	0			10,109	1,112

K = 0.8

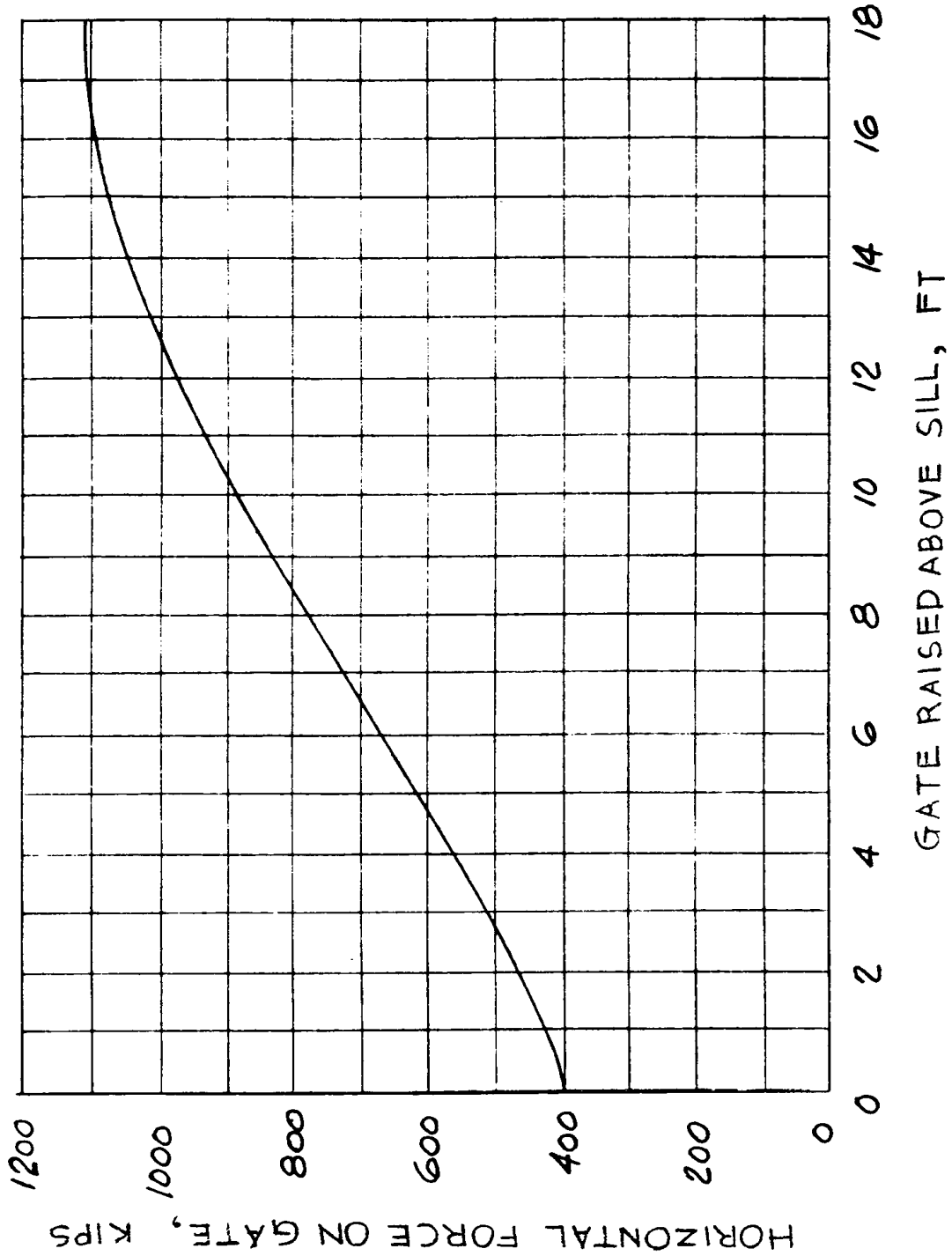

PLATE B-89
(SHEET 9 OF 19)

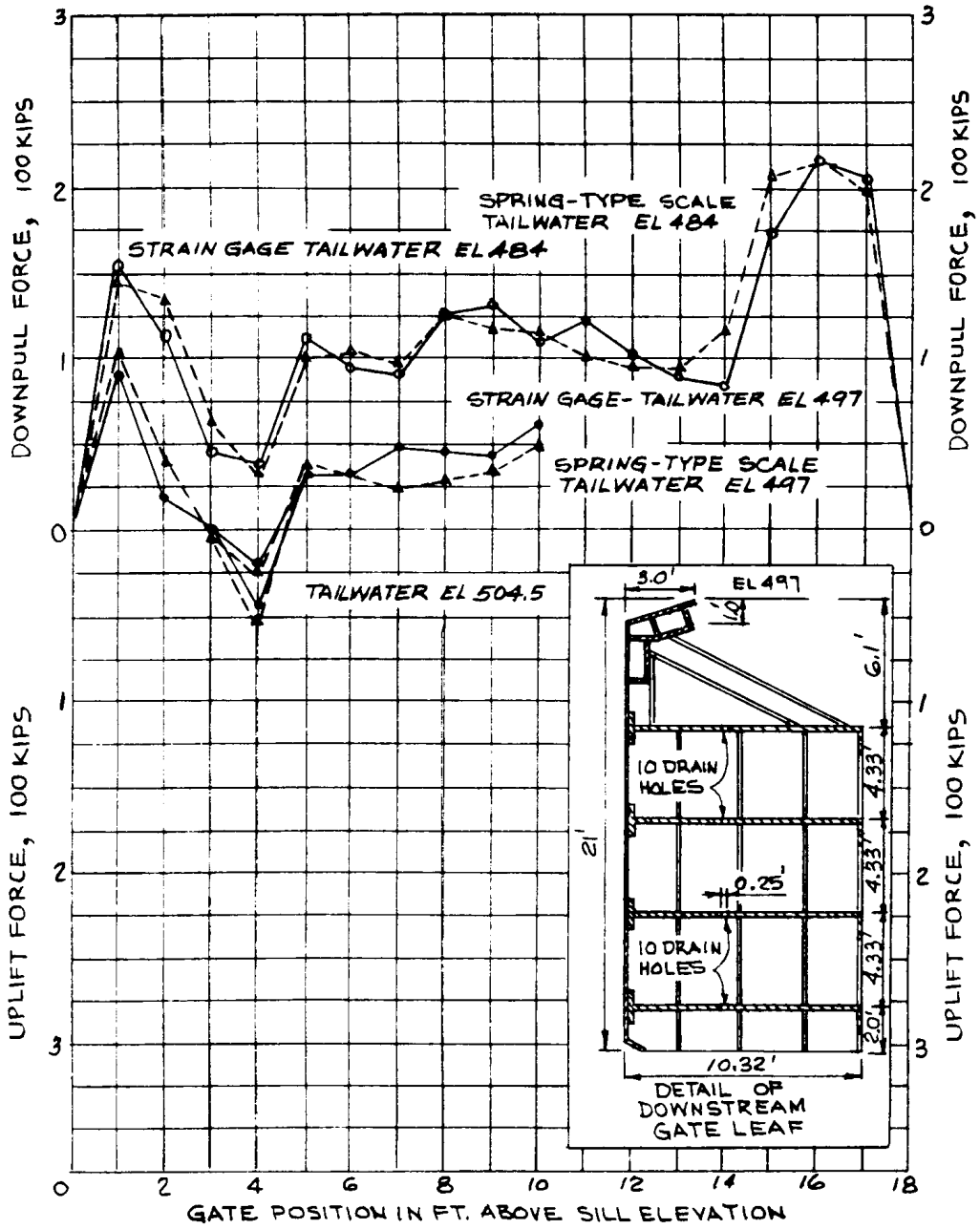

NOTE: OPEN SYMBOLS DESIGNATE LOW TAILWATER. CLOSED SYMBOLS DESIGNATE HIGH TAILWATER GATE SILL ELEVATION 497. DURING OPERATION OF GATE, UPPER POOL ELEVATION WAS MAINTAINED AT 515. AERATION TUBES OPEN DURING TESTS.

EMERGENCY GATE, GREENUP LOCKS, OHIO RIVER, KENTUCKY. LOAD ON DOWNSTREAM LEAF (COMP. FOR RACINE LOCKS)

PLATE B-89
(SHEET 10 OF 19)

HYDRAULIC FORCES
TRIANGULAR - SHAPED
GATE CREST - TYPE 9 (FINAL) DESIGN

E. HOIST REEVING FOR RAISING DOWNSTREAM EMERGENCY GATE.

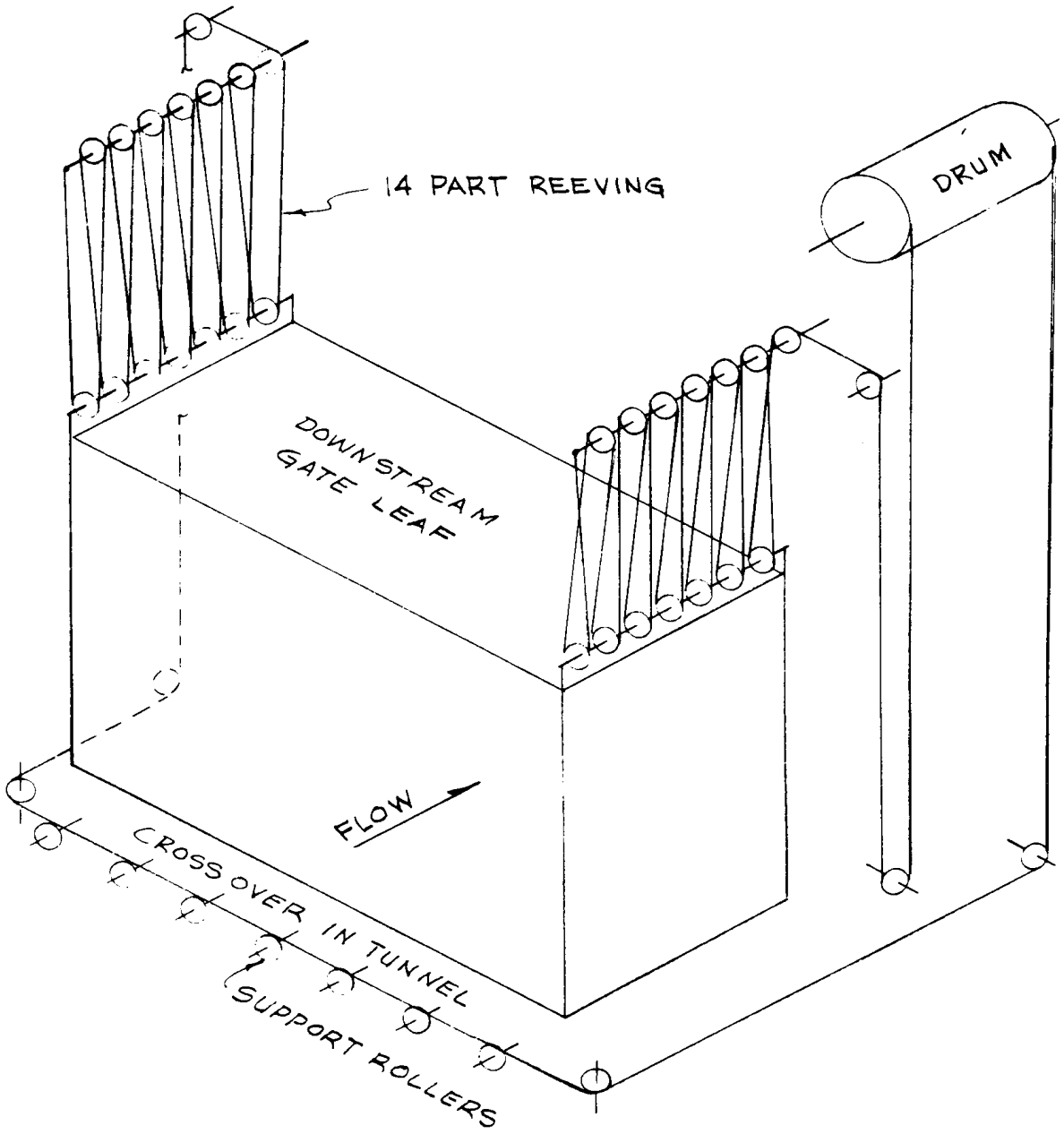

PLATE B-89
(SHEET 11 OF 19)

TENSION RATIOS OF WIRE ROPE SHEAVES

(FROM MACHINE DESIGN BY BLACK AND ADAMS, THIRD EDITION, PAGES 293 THROUGH 299)

$$C = \frac{D + fd + 2e}{D - fd - 2e'}$$

WHERE

C = TENSION RATIO

D = PITCH DIAMETER OF SHEAVE

f = COEFFICIENT OF FRICTION

d = DIAMETER OF PIN

e AND e' = OFFSET OF ROPE DUE TO BENDING

NOTE: e AND e' ARE ASSUMED TO BE NEGLIGIBLE DIMENSIONS AND ARE ESTIMATED AND MUST BE CHECKED.

GATE SHEAVES — TENSION RATIO C_1

D = 36" d = 11.5"

f (BRONZE ON BRONZE) = 0.133

REF. KENT'S MECH. ENG'R HANDBOOK, 1961, PAGE 7-28

$$C_1 = \frac{36 + (0.133)(11.5)}{36 - (0.133)(11.5)} = \frac{36.0 + 1.53}{36.0 - 1.53} = \frac{37.53}{34.47} = \underline{1.087}$$

HOIST SHEAVES — TENSION RATIO C_2

D = 36" $d \cong 14\frac{3}{4}$ 180° TURN

f = 0.0131 (ROLLER BEARING)

REF. KENT'S MECH. ENG'R HANDBOOK, 1961, PAGE 7-31

$$C_2 = \frac{36 + (0.0131)(14.75)}{36 - (0.0131)(14.75)} = \frac{36.0 + 0.193}{36.0 - 0.193} = \frac{36.2}{35.8} = \underline{1.012}$$

90° TURN

$$C_3 = \frac{36 + (0.0131)(14.75)(0.707)}{36 - (0.0131)(14.75)(0.707)} = \frac{36 + 0.137}{36 - 0.137} = \frac{36.14}{35.86} = \underline{1.008}$$

TENSION RATIOS OF WIRE ROPE SHEAVES (CONT'D)

90° TURN

$D = 36''$ $\quad d = 4.75$

$f = 0.133$ (BRONZE BUSHED)

$$C_3 = \frac{36.0 + (0.133)(4.75)(0.707)}{36.0 - (0.133)(4.75)(0.707)} = \frac{36.0 + 0.446}{36.0 - 0.446}$$

$$\frac{36.45}{35.55} = \underline{1.025}$$

180° TURN

$$C_4 = \frac{36.0 + (0.133)(4.75)}{36.0 - (0.133)(4.75)} = \frac{36.0 + 0.632}{36.0 - 0.632} = \frac{36.63}{35.37}$$

$$= \underline{1.036}$$

LOAD IN ROPE THROUGH SHEAVES

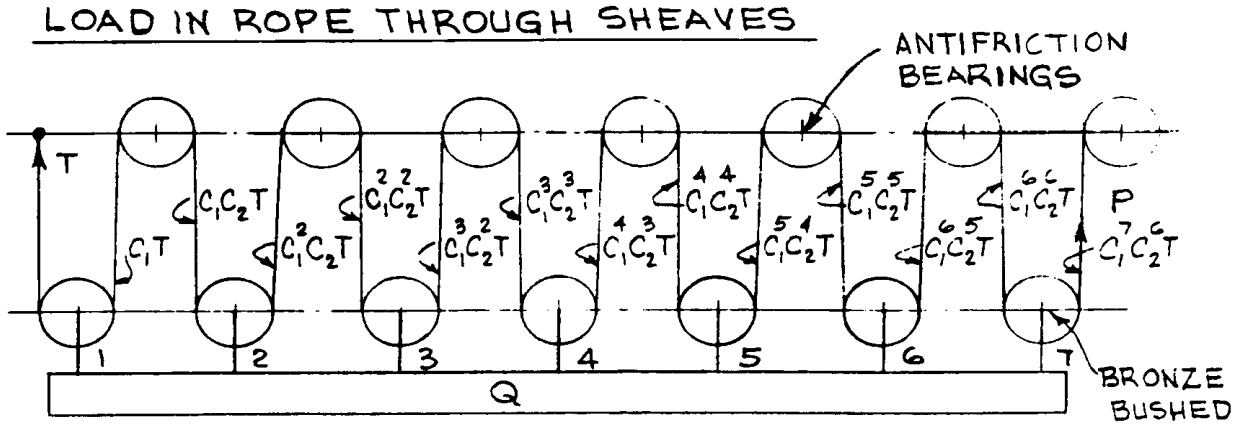

C_1 - LOWER SHEAVES TENSION RATIO COEF.

C_2 - UPPER SHEAVES TENSION RATIO COEF.

ASSUME GATE SHEAVE NO. 4 CARRIES 1/7 OF THE LOAD.

$$\frac{Q}{7} = C_1^3 C_2^3 T + C_1^4 C_2^3 T$$

$$\frac{Q}{7} = (C_1^3 C_2^3 + C_1^4 C_2^3)\,T$$

$$T = \frac{Q}{7(C_1^3 C_2^3 + C_1^4 C_2^3)}$$

$$= \frac{Q}{7[(1.087)^3(1.012)^3 + (1.087)^4(1.012)^3]}$$

$$= \frac{Q}{7[(1.285)(1.036) + (1.397)(1.036)]}$$

$$= \frac{Q}{7[(1.331) + (1.446)]} = \frac{Q}{7(2.777)}$$

$$= \frac{Q}{19.4}$$

LOAD IN ROPE THROUGH SHEAVES (CONT'D)

$$P = C_1^7 C_2^6 T = (1.087)^7 (1.012)^6 \frac{Q}{19.4}$$

$$P = (1.793)(1.074) \frac{Q}{19.4} = \frac{Q}{10.1}$$

DRUM LOAD FROM IDLER SIDE

$$P_{DRUM} = C_5 C_3^5 P$$

$$= (1.008)(1.028)^5 P$$

$$P_{DRUM} = \frac{(1.008)(1.148)\,Q}{10.1}$$

$$P_{DRUM} = \frac{Q}{8.72}$$

$$\text{REEVING EFF.} = \frac{8.72 \times 100}{14}$$

$$= 62.2\%$$

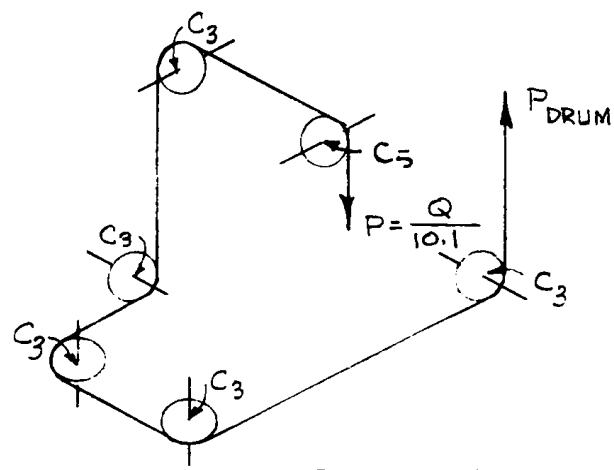

IDLER SIDE

DRUM LOAD FROM MACHINERY SIDE

$$P_{DRUM} = C_2 C_3 C_4 P$$

$$= (1.008)(1.028)(1.033) \frac{Q}{10.1}$$

$$= \frac{1.070}{10.1} Q$$

$$P_{DRUM} = \frac{Q}{9.44}$$

$$\text{REEVING EFF.} = \frac{9.44 \times 100}{14.0} = 67.4\%$$

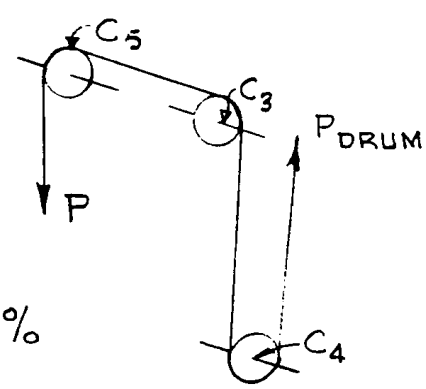

(1)	(2)	(3)	(4)	(5)	(6)	(7)	(8)	(9)	(10)
FT ABOVE SILL	$W_T/2$ ½ DEAD WT OF GATE & SILT KIPS	P/2 ½ FORCE NORMAL TO GATE KIPS	L_S FRICTION FORCE OF ONE SEAL KIPS	L_R ½ FRICTION FORCE OF ROLLERS KIPS	$F_O/2$ ½ DOWN-WARD HYD. FORCE SEE PL. 109 KIPS	LOAD ON ONE GATE SHEAVE ASSY. (2)+(4)+(5)+(6)=Q KIPS	P_{DRUM} IDLER SIDE ROPE LOAD AT DRUM (7)÷8.72 KIPS	P_{DRUM} MACH. SIDE ROPE LOAD AT DRUM (7)÷9.44 KIPS	P_{DRUM} TOTAL (8)+(9) KIPS
0	297	197	0	9.90	0	307	35.2	32.5	67.7
1		215	1.65	10.75	78	387	44.4	41.0	85.4
2		234	1.74	11.70	57	367	42.1	38.9	81.0
3		254	1.81	12.70	23	335	38.4	35.5	73.9
4		280	1.91	14.01	19	332	38.1	35.2	73.3
5		306	2.01	15.31	57	371	42.5	39.3	81.8
6		334	2.12	16.70	47	363	41.6	38.5	80.1
7		358	2.21	17.90	46	363	41.6	38.5	80.1
8		387	2.32	19.36	63	382	43.8	40.5	84.3
9		413	2.43	20.70	67	387	44.4	41.0	85.4
10		438	2.53	21.90	56	377	43.2	39.9	83.1
11		462	2.62	23.10	62	385	44.2	40.8	85.0
12		484	2.70	24.20	52	376	43.1	39.8	82.9
13		504	2.78	25.20	44	369	42.3	39.1	81.4
14		522	2.85	26.10	39	365	41.9	38.7	80.6
15		530	2.88	26.50	87	413	47.4	43.8	91.2
16		547	2.94	27.40	109	436	50.0	46.2	96.2
17		554	2.97	27.70	104	432	49.5	45.8	95.3
18		556	2.98	27.80	14	342	39.2	36.2	75.4

EXAMPLE COMPUTATION USING GATE RAISED 1 (ONE) FT

COL 2 - DEAD WEIGHT OF ½ OF GATE (INCLUDING SILT)

$W/2 = 593.0/2 = 297$ KIPS

COL 3 - NORMAL FORCE ON ½ OF GATE
SEE GRAPH "HORIZONTAL FORCES ON EMERGENCY GATE VS GATE RAISED," PLATE B-89, SHEET 9.
$P'/2 = 430/2 = 215$ KIPS

COL 4 - FRICTION FORCE OF ONE SEAL (FOR LOCATION OF COL. NUMBERS SEE PT. 113)

$C_S = 1.0$ (DESIGN CRITERA)

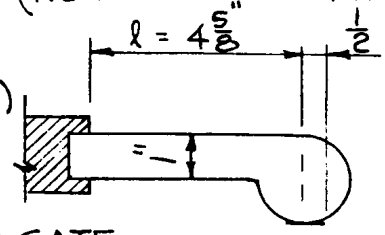

FORCE DUE TO WATER PRESSURE (P_S)

$$P_S = \frac{(F_N)(A_S)(C_S)}{2\,(A_P)}$$

F_N = HORIZONTAL FORCE NORMAL TO GATE

A_S = AREA (SQ FT) SEAL SUBJECT TO DIFFERENTIAL HEAD

A_P = AREA (SQ FT) GATE RAISED ABOVE SILL

$$P_S = \frac{(430)(1.0)(5\frac{1}{8}/12)(1.0)}{(2)(110.5)(1.0)} = 0.830^K$$

FORCE DUE TO PRESET OF $\frac{3}{4}''$ (P_P)

$$P_P = \frac{3\,\Delta\,E\,I}{\ell^3}(L)(C_3)$$

L = LENGTH OF SEAL COMPRESSED

E = 2000 - ELASTIC MOD. - DUROMETER 60 - (SEE KENTS 5-68)

$t = 1''$

$$= \frac{3(0.75)(2000)\left[\frac{1}{12}(12'')(1.0'')^3\right](18')(1.0)}{4.625^3}$$

$$= 0.820^K$$

$$L_S(\text{TOTAL}) = P_S + P_P = 0.830 + 0.820 = 1.65^K$$

COL 5 - ONE HALF FRICTION FORCE OF ROLLERS (L_R)

$$L_R = \frac{F_N}{2}(C_R) \quad \text{WHERE } C_R = 0.05 \text{ (DESIGN CRITERIA)}$$

$$= \frac{430}{2}(0.05) = 10.75^K$$

COL 6 - HYDRAULIC DOWNWARD FORCE ON ONE-HALF GATE - ($F_D/2$)

SEE GRAPH "FORCE UPLIFT OR DOWNPULL VS GATE POSITION ABOVE SILL" (PLATE 107) $\quad \frac{F_D}{2} = \frac{156}{2} = 78^K$

COL 7 - TOTAL LOAD ON ONE GATE SHEAVE ASSEMBLY

$$Q = \frac{W}{2} + L_S + L_R + L_{HYD} = 387^K$$

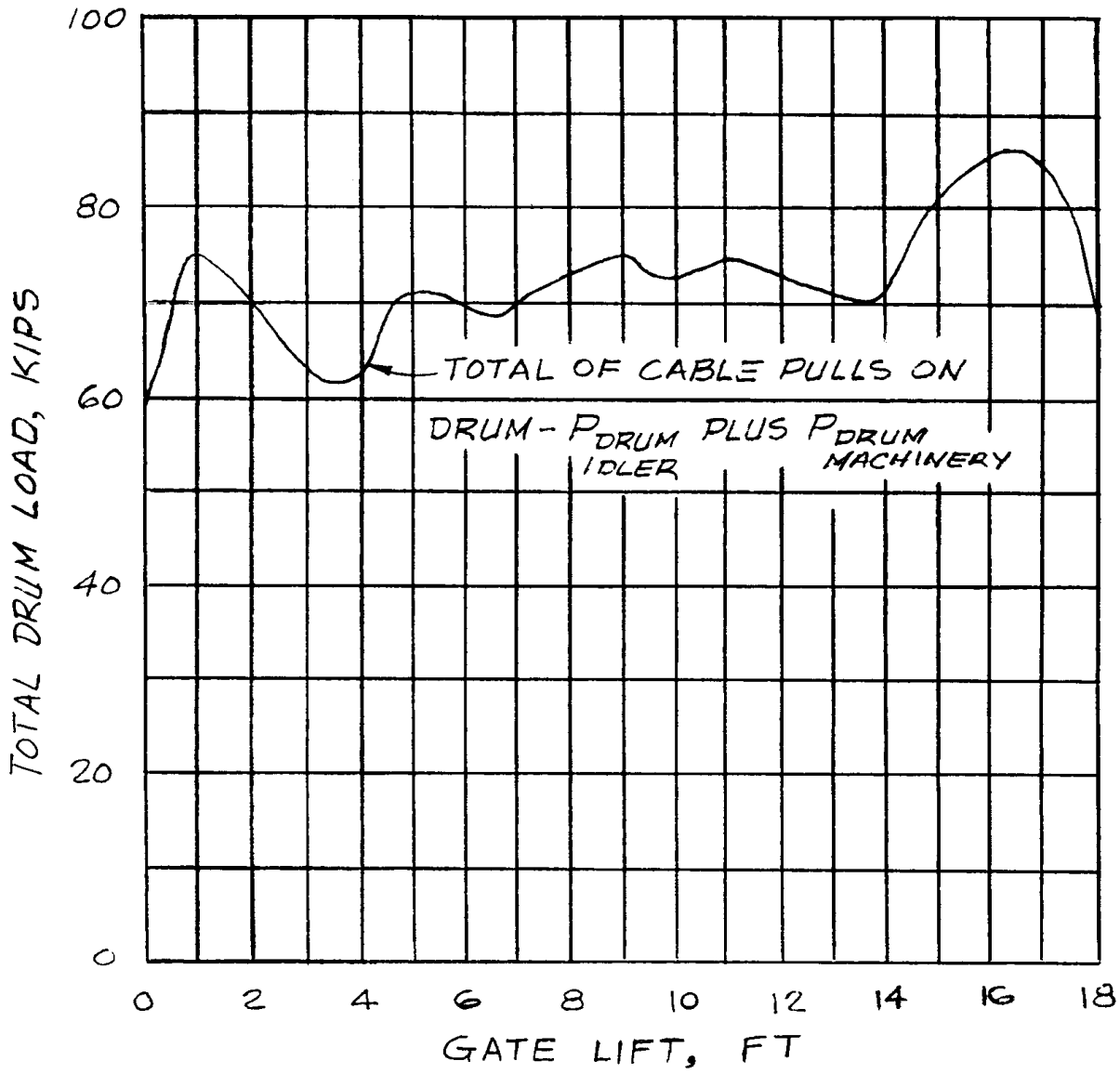

PLATE B-89
(SHEET 18 OF 19)

DOWNSTREAM GATE
GATE LIFT VS. DRUM LOAD
DESIGN LOAD

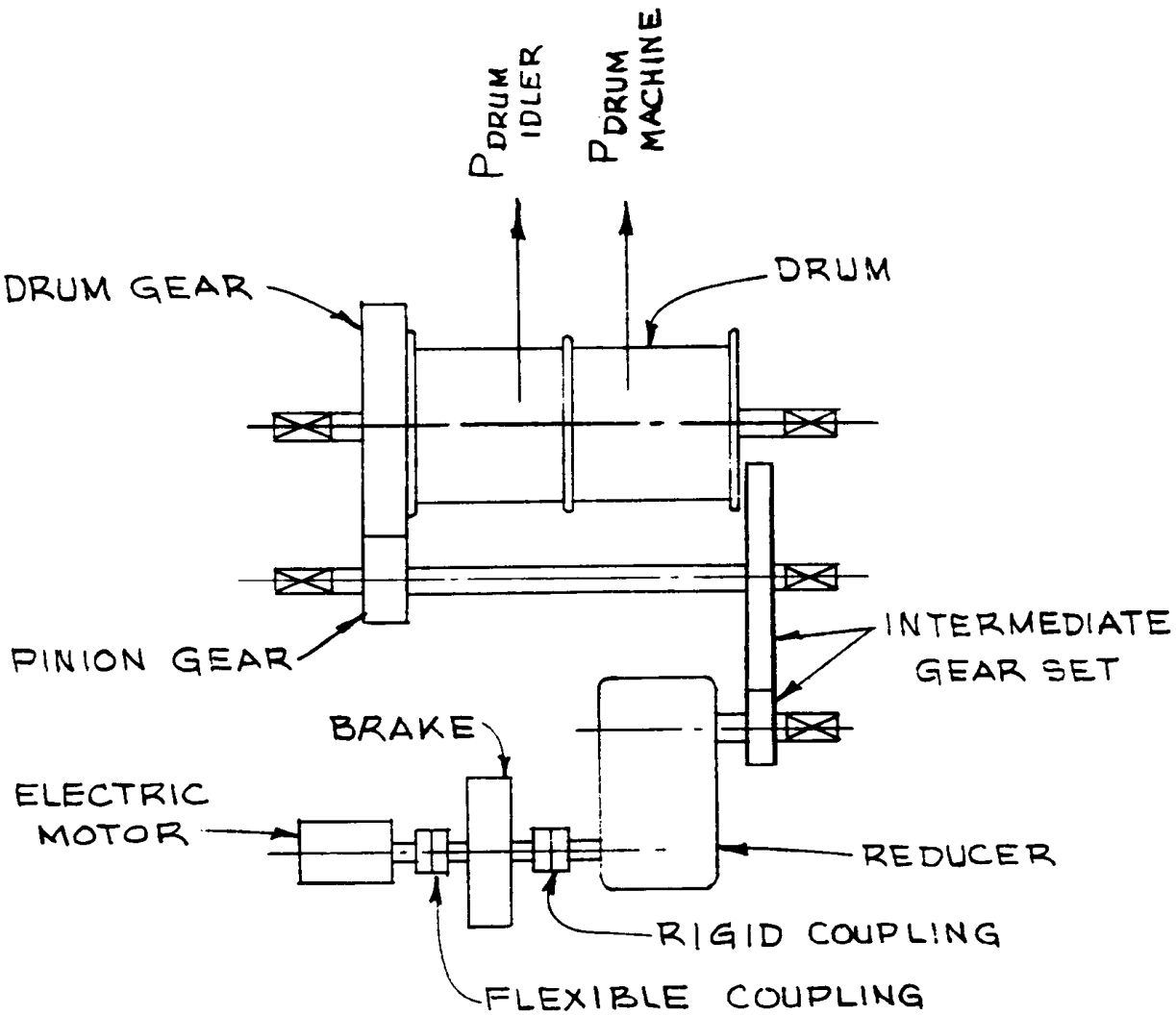

DOWNSTREAM GATE
HOIST
GENERAL LAYOUT OF HOIST MACHINE

PLATE B-89
(SHEET 19 OF 19)

GATE WHEELS (CROWNED TREAD)

LOAD ON WHEEL - MAXIMUM WHEEL LOAD FOR THE FOLLOWING EXAMPLE IS 337.5 KIPS (WHEEL LOADS ARE DETERMINED BY THE STRUCTURAL DESIGNER)

WHEEL - ASSUME THE DIAMETER OF TREAD TO BE 36"

WIDTH OF TREAD:

$$\text{WIDTH} = \frac{\text{LOAD}}{800 \times \text{DIAM (INCHES)}} = \frac{337.5 \times 1000}{800 \times 36}$$

$$= 11.75'' \text{ USE } 12''$$

SEE ROARK, "FORMULAS FOR STRESS AND STRAIN, 2ND. EDITION" PAGE 292, PARAGRAPH 2, WHERE MATERIAL IS EQUAL TO "TOOL STEEL," LOADING IS "SLOW MOTION," AND TYPE OF LOADING IS "CYLINDRICAL ROLLER ON FLAT PLATE".

COMPRESSIVE STRESS AT POINT OF CONTACT

ASSUME THE SURFACE OF THE WHEEL IS TO BE MADE OF WELD DEPOSIT OF E410 OR ER420 ELECTRODES. THESE ELECTRODES ARE 12% CHROMIUM AND GIVE GOOD RESISTANCE TO CORROSION, EROSION, AND ABRASION. SEE WELDING HANDBOOK, SECTION 5, SIXTH EDITION, PAGE 94-29, BY AMERICAN WELDING SOCIETY, 1973.

THE SURFACE OF THE ROLLER SHOULD HAVE A BRINELL HARDNESS OF APPROXIMATELY 360, WHICH IS NORMALLY OBTAINED BY AIR HARDENING.

THE DISTANCE FROM THE CENTER OF WHEEL, X, THAT THE REACTION ON THE TRACK WOULD OCCUR FOR MAXIMUM SLOPE AT VARIOUS CROWN RADII OF WHEEL TREAD.

THE SLOPE OF THE GATE UNDER MAXIMUM LOADING CONDITIONS WAS CALCULATED TO BE AS FOLLOWS:

α (SLOPE) = 0°-12' (AT END OF GATE)

Y_{MAX} = 2.457" (TANα × GATE LENGTH ÷ 2)

Δ_{MAX} = 1.17" (DEFLECTION - CENTER OF GATE)

R = CROWN RADIUS WHEEL TREAD

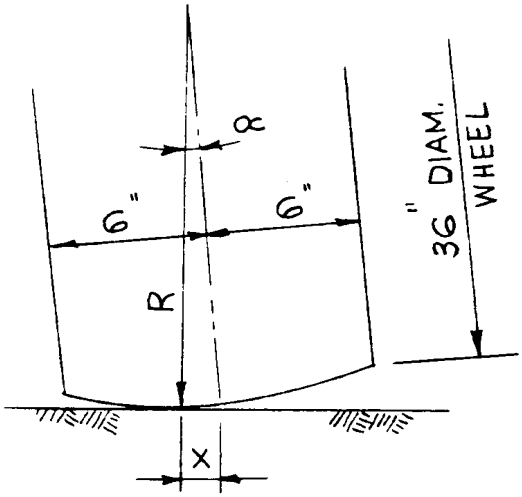

CROWN RADIUS - R	SIN 0°-12'	DISTANCE X (IN.)
20'-0" = 240"	0.00349	0.838
30'-0" = 360"	↓	1.257
40'-0" = 480"	↓	1.675
50'-0" = 600"	↓	2.090
60'-0" = 720"	↓	2.520
70'-0" = 840"	↓	2.930
80'-0" = 960"	↓	3.350

DETERMINE COMPRESSIVE STRESS AT CENTER OF ELLIPTICAL CONTACT SURFACE OF GATE WHEEL RUNNING ON A FLAT PLATE TRACK.

A COMPUTER PROGRAM MAY BE USED TO RAPIDLY COMPUTE THE MAJOR AXIS OF ELLIPSE, MINOR AXIS OF ELLIPSE, MAXIMUM COMPRESSIVE STRESS, AND TOTAL DEFLECTION OF BOTH BODIES.

THE PROGRAM SHOULD BE WRITTEN USING FORMULA'S WHICH ARE TAKEN FROM ROARK, FORMULAS FOR STRESS AND STRAIN, 1965 EDITION, PAGE 321, CASE NO. 8, "GENERAL CASE OF TWO BODIES IN CONTACT."

THE PROGRAM SHOULD ASSUME, FOR THIS PROBLEM, A MODULUS OF ELASTICITY FOR BOTH WHEEL AND FLAT PLATE TRACK TO BE 30×10^6 PSI AND POISSON'S RATIO FOR BOTH BODIES TO BE 0.26.

THE COMPUTER READOUT WOULD BE AS FOLLOWS:

WHEEL DIAM IN.	CROWN RADIUS FT	MAX. COMP STRESS KPSI *	MAJ AXIS ELLIPSE IN.	MIN AXIS ELLIPSE IN.	TOTAL DEFLECTION IN.
36.00	20.00	184	4.34	0.80	0.0142
	30.00	164	5.30	0.73	0.0131
	40.00	158	5.86	0.69	0.0122
	50.00	154	6.30	0.66	0.0116
	60.00	146	6.84	0.64	0.0111
	70.00	142	7.27	0.62	0.0107
	80.00	139	7.62	0.60	0.0104

* MAXIMUM WHEEL REACTION = 337.5 KIPS

SAMPLE COMPUTATION USING 36-IN. DIAMETER WHEEL, 20 FT CROWN RADIUS, AND 337.5 KIPS WHEEL LOAD (USING FORMULAS FROM ROARK)

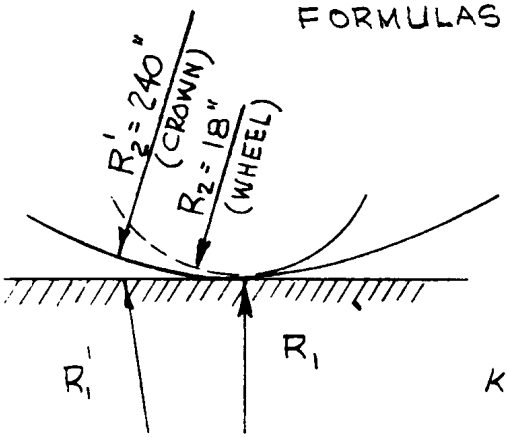

(R_1' AND R_1 ARE INFINITE)

$$\delta = \frac{4}{\frac{1}{INF.} + \frac{1}{R_2} + \frac{1}{INF.} + \frac{1}{R_2'}} = \frac{4}{\frac{1}{18} + \frac{1}{240}}$$

$$= \frac{4}{0.055555 + 0.004167} = \frac{4}{0.0597216}$$

$$= 66.9774$$

$$k = \frac{8}{3} \frac{E_1 E_2}{E_2(1-\nu_1^2) + E_1(1-\nu_1^2)}$$

$$E_1 = E_2 = 30 \times 10^6 \qquad \nu = 0.26$$

$$k = 2.66667 \frac{(30\times10^6)(30\times10^6)}{[30\times10^6(1-0.26^2)] + [30\times10^6(1-0.26^2)]}$$

$$= 2.66667 \frac{9\times10^{14}}{5.5944\times10^7} = 2.66667(1.60875\times10^7)$$

$$= 4.29\times10^7$$

$$\theta = \text{ARC COS}\frac{1}{4}\delta\sqrt{\left(\frac{1}{R_1} - \frac{1}{R_1'}\right)^2 + \left(\frac{1}{R_2} - \frac{1}{R_2'}\right)^2 + 2\left(\frac{1}{R_1} - \frac{1}{R_1'}\right)\left(\frac{1}{R_2} - \frac{1}{R_2'}\right)\cos 2\phi}$$

$$= \text{ARC COS}\frac{66.9774}{4}\sqrt{\left(\frac{1}{INF.} - \frac{1}{INF.}\right)^2 + \left(\frac{1}{18} - \frac{1}{240}\right)^2 + 2\left(\frac{1}{INF.} - \frac{1}{INF.}\right)\left(\frac{1}{18} - \frac{1}{240}\right)\cos 2\phi}$$

$$= \text{ARC COS}\,16.74435\sqrt{(0)^2 - (0.055555 - 0.00416)^2 + 0}$$

$$= \text{ARC COS}\,16.74435(0.0513884)$$

$$= \text{ARC COS}\,0.8604653 = 30^\circ\text{-}38'$$

FROM TABLE (ROARK PAGE 321) INTERPOLATE

θ	30°	$30^\circ - 38'$	35°
α	2.731	2.6876	2.397
β	0.493	0.4978	0.530
λ	1.453	1.4656	1.550

SAMPLE COMPUTATION (CON'TD)

$$c = \text{MAJOR AXIS} = \alpha\sqrt[3]{\frac{P\delta}{k}} = 2.6876\sqrt[3]{\frac{(337{,}500.0)(66.9774)}{4.29\times10^{7}}}$$

$$= 2.6876 \times 0.8077 = 2.17'' \text{ (SEMI-AXIS)}$$

$$d = \text{MINOR AXIS} = \beta\sqrt[3]{\frac{P\delta}{k}} = 0.4978 \times 0.8077 = 0.402'' \text{ (SEMI-AXIS)}$$

S_c = MAX COMPRESSIVE STRESS AT CENTER OF CONTACT

$$= \frac{1.5P}{\pi c d} = \frac{(1.5)(337.5)}{(3.1416)(2.17)(0.402)}$$

$$= \frac{5.0625\times10^{5}}{2.74054} = 184.7 \text{ K/SQ IN.}$$ (COMPARED TO 184 KSI FROM THE COMPUTER PROGRAM, SEE PLATE B-90, SHEET 3)

y = COMBINED DEFORMATION OF BOTH BODIES AT CONTACT.

$$= \lambda\sqrt[3]{\frac{P^2}{K^2\delta}} = 1.4656\sqrt[3]{\frac{(337{,}500.0)^2}{(4.29\times10^{7})^2(66.9774)}}$$

$$= 1.4656\,(0.009739)$$

$$y = 0.0142''$$

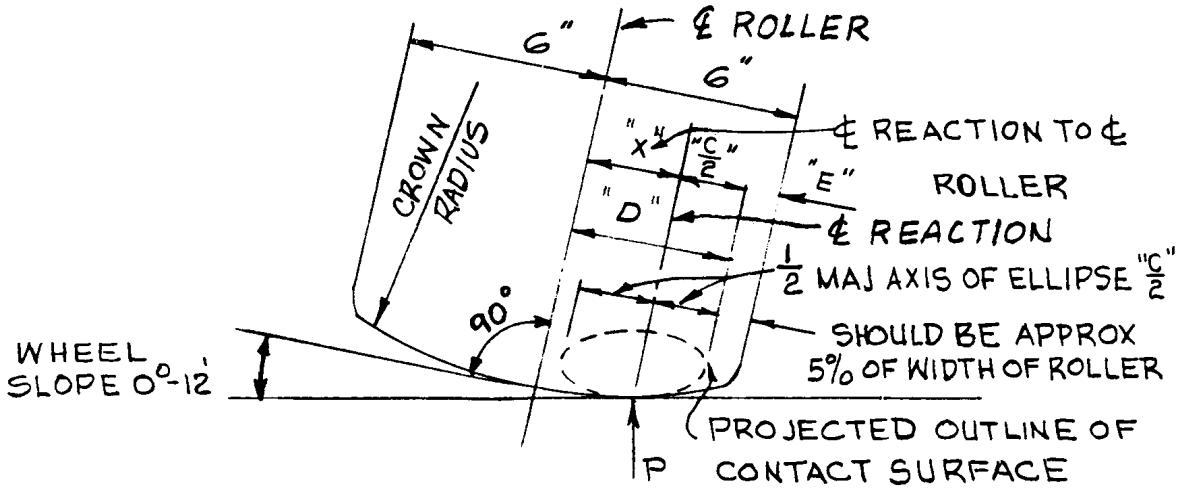

THE CROWN RADIUS OF TREAD SHOULD BE AS LARGE AS POSSIBLE YET SELECTED SO THAT THE EDGE OF THE COMPRESSION AREA SHALL FALL WITHIN THE FACE OF THE ROLLER.

"E" = DISTANCE BETWEEN OUTSIDE EDGE OF ROLLER AND OUTSIDE EDGE OF CONTACT SURFACE (ELLIPSE)

"D" = "X" + "C/2" "E" = 1/2 WIDTH ROLLER MINUS "D"

CROWN RADIUS	"X" - ℄ REACTION TO ℄ ROLLER (PL B-90 SHEET 2)	1/2 MAJOR AXIS (C/2) OF ELLIPSE (PL B-90 SHEET 2)	DISTANCE "D"	EDGE DIST. "E"
20 FT	0.838 IN.	2.17 IN.	3.01 IN.	2.99 IN.
30	1.257	2.65	3.91	2.09
40	1.675	2.93	4.61	1.39
50	2.09	3.15	5.24	0.76
60	2.52	3.42	5.94	0.06
70	2.93	3.64	6.57	-0.57
80	3.35	3.81	7.16	-1.16

THE 50-FOOT CROWN RADIUS SHOULD BE USED SINCE IT IS THE LEAST RADIUS THAT THE ELLIPSE FALLS WITHIN A REASONABLE DISTANCE FROM EDGE OF ROLLER.
(SAY 12" WIDE × 5% = 0.6")

WHEEL DESIGN (CON'TD)

THE WHEEL TREAD SHOULD BE DESIGNED WITH A FACTOR OF SAFETY OF 0.5 BASED ON THE YIELD POINT OF THE MATERIAL INVOLVED AND THE MAXIMUM COMPUTED WHEEL LOAD.

CROWN RADIUS	STRESS IN CONTACT AREA OF WHEEL	MINIMUM YIELD POINT OF REQUIRED MATERIAL
20 FT	184 KSI	92.0 KSI
30	164	82.0
40	158	79.0
50	154	77.0 =< 89 KPS
60	146	73.0
70	142	71.0
80	139	69.5

THE ACTUAL YIELD POINT OF THE WELD DEPOSIT OF E 410 WELDING ELECTRODES CANNOT BE FOUND BUT CAN BE ESTIMATED FROM ITS ULTIMATE STRENGTH AND BRINELL HARDNESS NUMBER, AND THE KNOWN ULTIMATE STRENGTH, YIELD STRENGTH AT ANOTHER BRINELL NUMBER, AS FOLLOWS:

	BHN	YIELD	ULTIMATE
KNOWN	150 *	35,000 *	70,000 *
UNKNOWN	360 **	X ⊕	178,000 ***

* PROPERTIES OF ELECTRODE USED
** HARDNESS OF DEPOSITED WELD METAL
*** PLATE B-90, SHEET 8.

$$\oplus \quad \frac{X}{178{,}000} = \frac{35{,}000}{70{,}000} \qquad X = 89{,}000 \text{ PSI}$$

THE STRESS AT 50 - FT CROWN RADIUS FALLS WITHIN THE ALLOWABLE STRESS, SO USE 50 FT

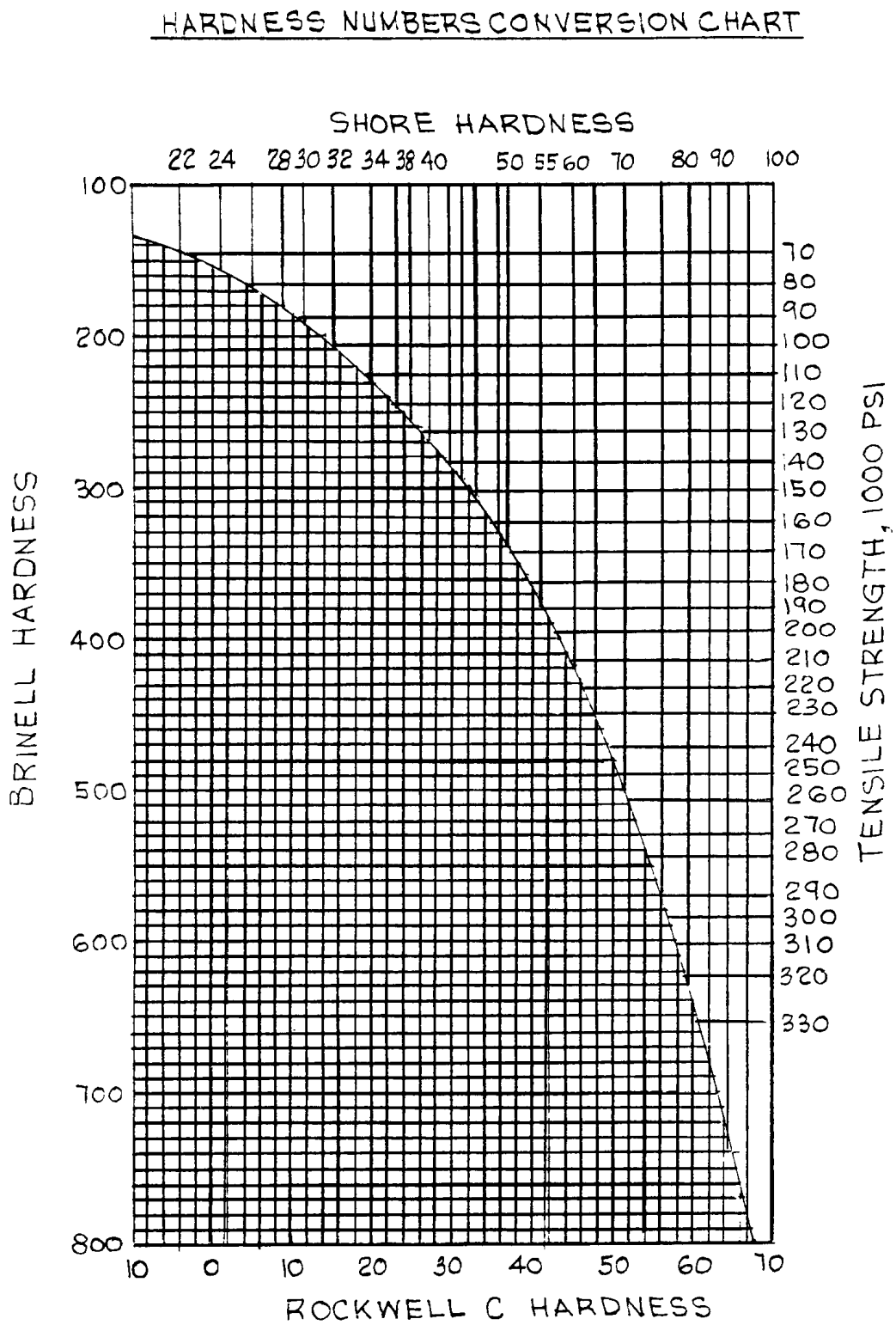

PLATE B-90
(SHEET 8 OF 8)