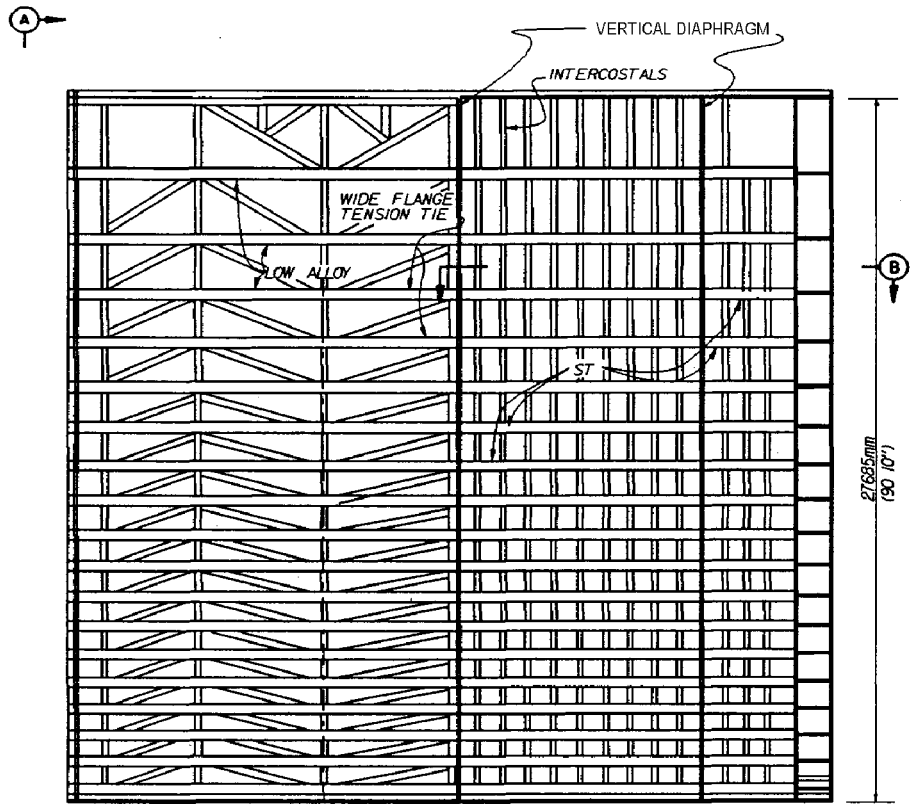

ELEVATION LOOKING UPSTREAM

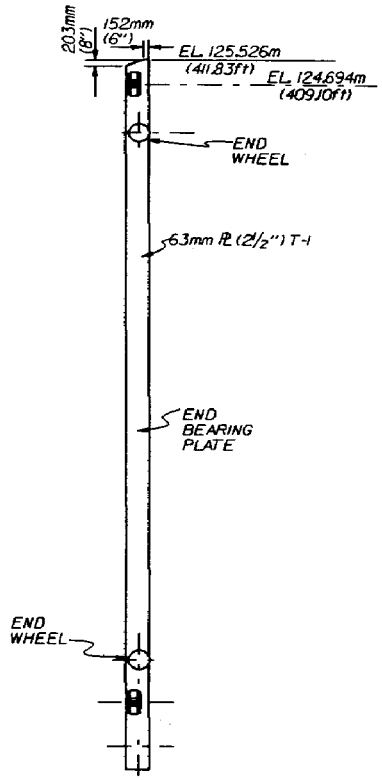

SECTION A

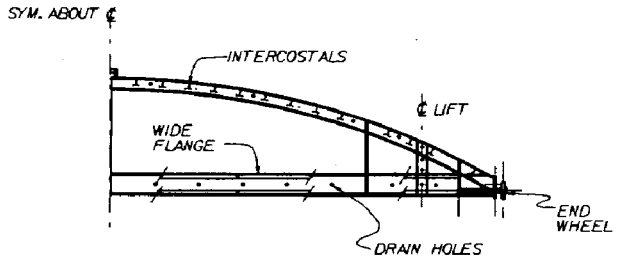

SECTION B

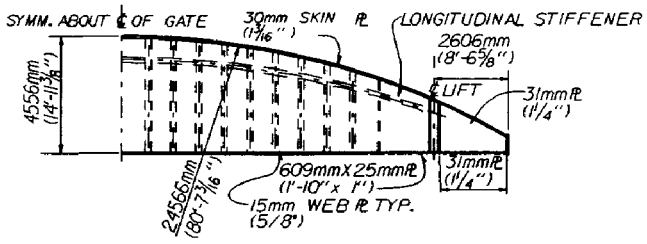

HALF PLAN OF TOP GIRDER

NOTE: NOT TO SCALE

SNAKE RIVER, ORE, IDA, WASH
ICE HARBOR LOCK AND DAM
NAVIGATION LOCK
OLD
DOWNSTREAM LIFT GATE

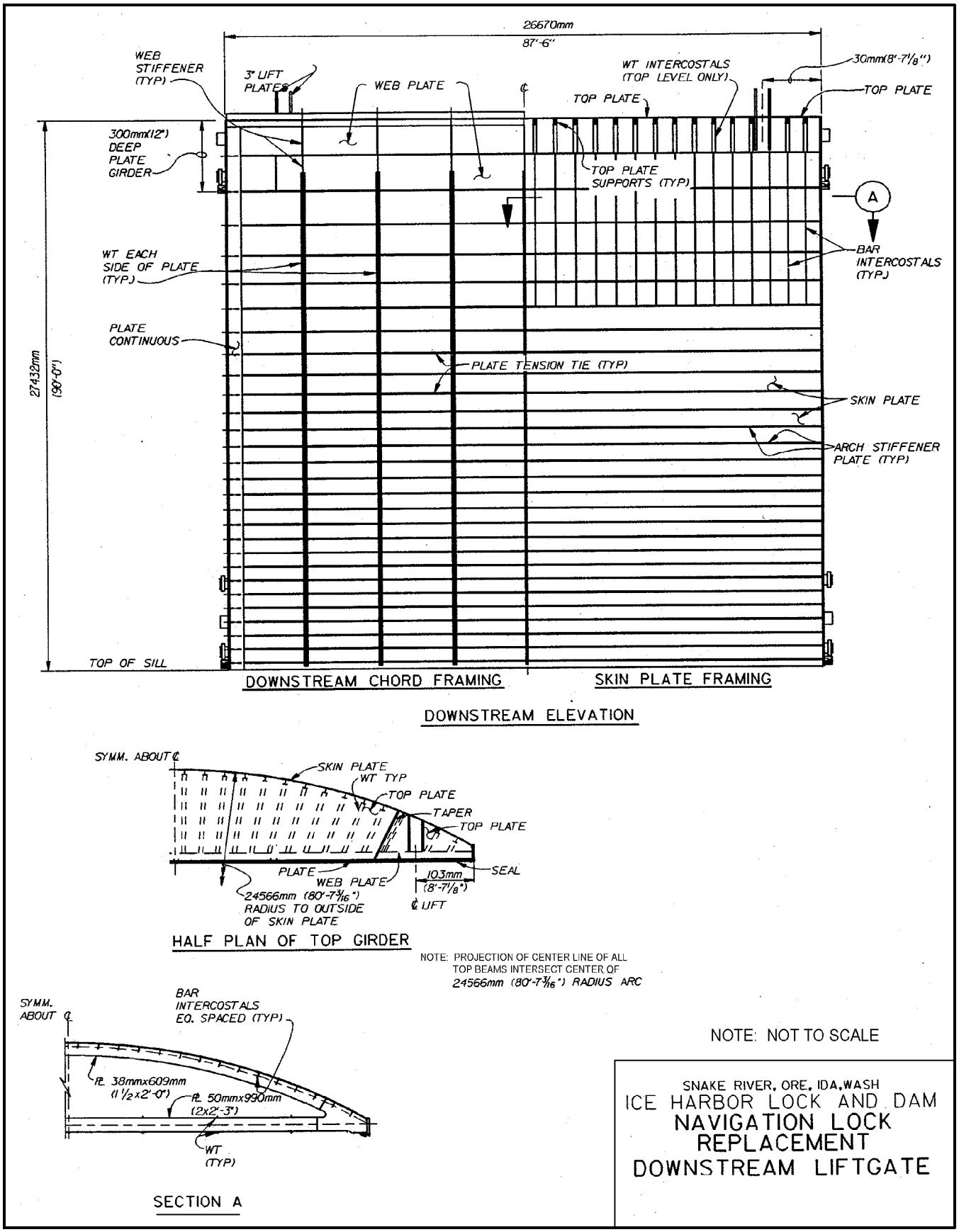
26670mm
87'-6"
WEB STIFFENER (TYP)
3" LIFT PLATES
WEB PLATE
WT INTERCOSTALS (TOP LEVEL ONLY)
30mm(8'-7 1/8")
TOP PLATE
TOP PLATE
300mm(12") DEEP PLATE GIRDER
TOP PLATE SUPPORTS (TYP)
A
BAR INTERCOSTALS (TYP)
WT EACH SIDE OF PLATE (TYP)
PLATE CONTINUOUS
27432mm (90'-0")
PLATE TENSION TIE (TYP)
SKIN PLATE
ARCH STIFFENER PLATE (TYP)
TOP OF SILL
DOWNSTREAM CHORD FRAMING
SKIN PLATE FRAMING
DOWNSTREAM ELEVATION
SYMM. ABOUT ℄
SKIN PLATE WT TYP
TOP PLATE
TAPER
TOP PLATE
PLATE
WEB PLATE
SEAL
103mm (8'-7 1/8")
24566mm (80'-7 3/16") RADIUS TO OUTSIDE OF SKIN PLATE
℄ LIFT
HALF PLAN OF TOP GIRDER
NOTE: PROJECTION OF CENTER LINE OF ALL TOP BEAMS INTERSECT CENTER OF 24566mm (80'-7 3/16") RADIUS ARC
SYMM. ABOUT ℄
BAR INTERCOSTALS EQ. SPACED (TYP)
PL 38mmx609mm (1 1/2x2'-0")
PL 50mmx990mm (2x2'-3")
WT (TYP)
SECTION A
NOTE: NOT TO SCALE
SNAKE RIVER, ORE, IDA, WASH
ICE HARBOR LOCK AND DAM
NAVIGATION LOCK
REPLACEMENT
DOWNSTREAM LIFTGATE

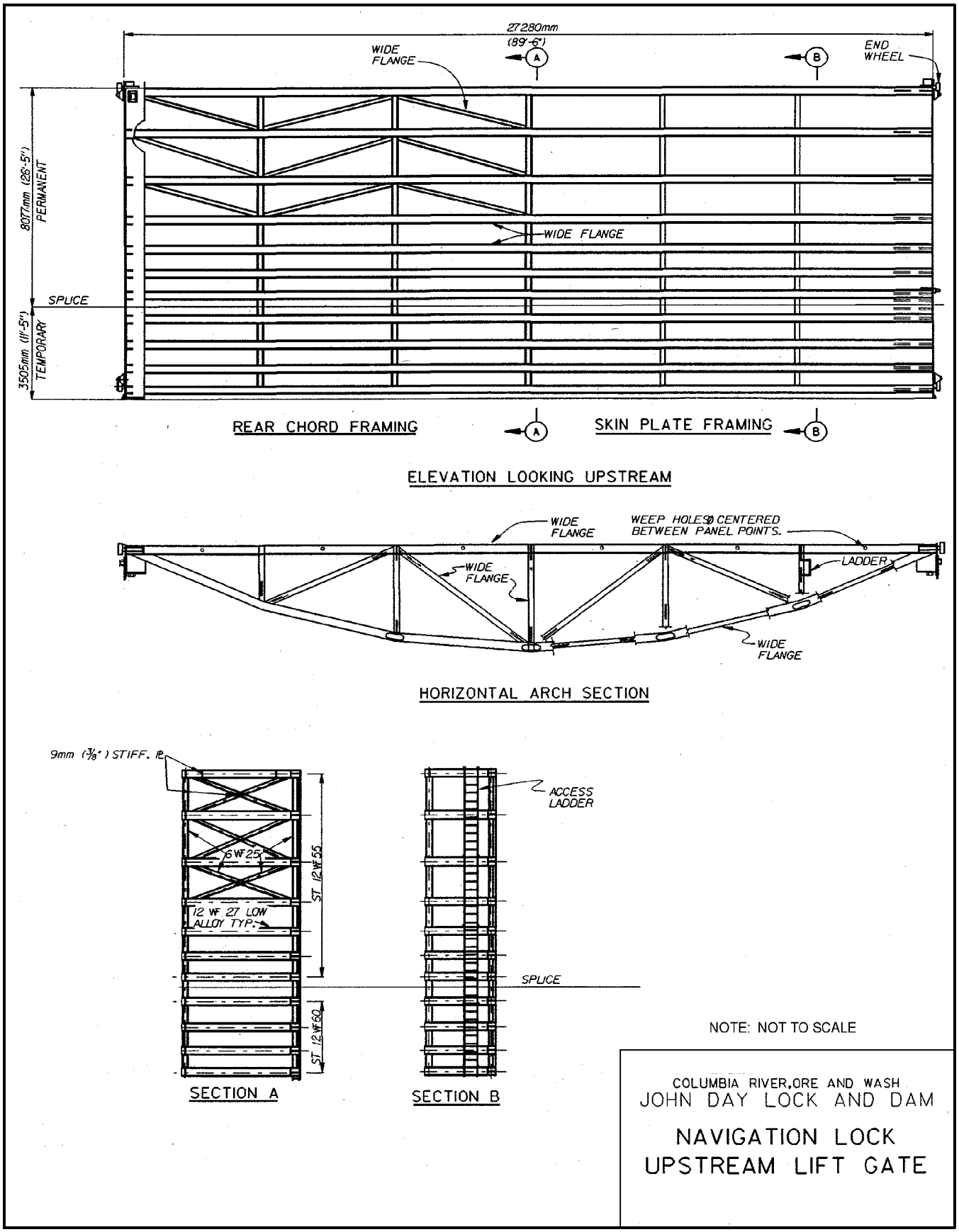
27280mm
(89'-6")
WIDE FLANGE
A
B
END WHEEL
8077mm (26'-5")
PERMANENT
WIDE FLANGE
SPLICE
3505mm (11'-5")
TEMPORARY
REAR CHORD FRAMING
A
SKIN PLATE FRAMING
B
ELEVATION LOOKING UPSTREAM
WIDE FLANGE
WEEP HOLES Ø CENTERED BETWEEN PANEL POINTS.
WIDE FLANGE
LADDER
WIDE FLANGE
HORIZONTAL ARCH SECTION
9mm (3/8") STIFF. PL
6WF25
12 WF 27 LOW ALLOY TYP.
ST 12WF55
ST 12WF60
SECTION A
ACCESS LADDER
SPLICE
SECTION B
NOTE: NOT TO SCALE
COLUMBIA RIVER, ORE AND WASH
JOHN DAY LOCK AND DAM
NAVIGATION LOCK
UPSTREAM LIFT GATE

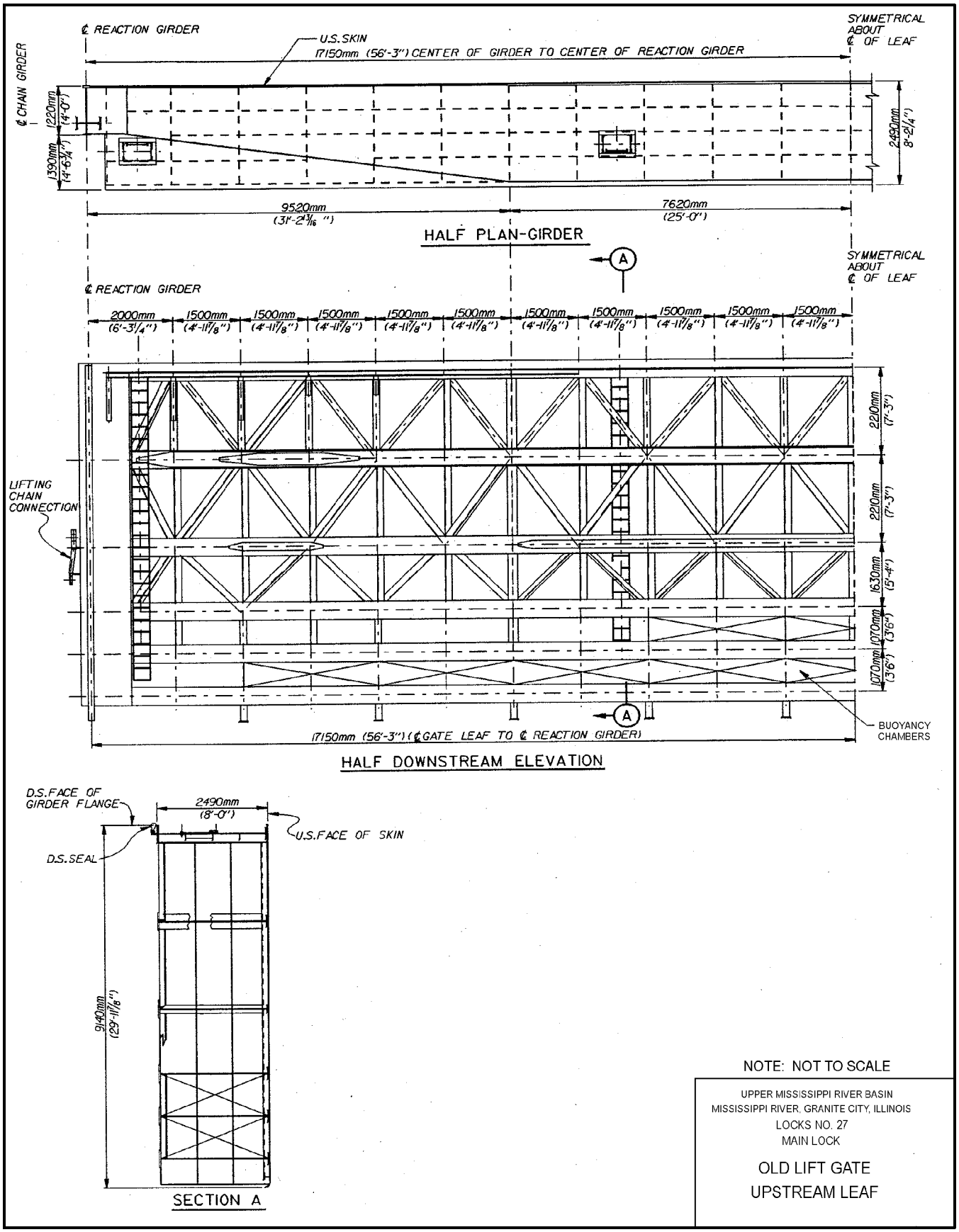
℄ REACTION GIRDER
U.S. SKIN
17150mm (56'-3") CENTER OF GIRDER TO CENTER OF REACTION GIRDER
SYMMETRICAL ABOUT ℄ OF LEAF
℄ CHAIN GIRDER
1220mm (4'-0")
1390mm (4'-6¾")
2490mm (8'-2¼")
9520mm (31'-2 3/16")
7620mm (25'-0")
HALF PLAN-GIRDER
A
SYMMETRICAL ABOUT ℄ OF LEAF
℄ REACTION GIRDER
2000mm (6'-3¼")
1500mm (4'-11⅞")
LIFTING CHAIN CONNECTION
2210mm (7'-3")
2210mm (7'-3")
1630mm (5'-4")
1070mm (3'-6")
1070mm (3'-6")
BUOYANCY CHAMBERS
17150mm (56'-3") (℄ GATE LEAF TO ℄ REACTION GIRDER)
HALF DOWNSTREAM ELEVATION
D.S. FACE OF GIRDER FLANGE
2490mm (8'-0")
U.S. FACE OF SKIN
D.S. SEAL
9140mm (29'-11⅞")
SECTION A
NOTE: NOT TO SCALE
UPPER MISSISSIPPI RIVER BASIN
MISSISSIPPI RIVER, GRANITE CITY, ILLINOIS
LOCKS NO. 27
MAIN LOCK
OLD LIFT GATE
UPSTREAM LEAF

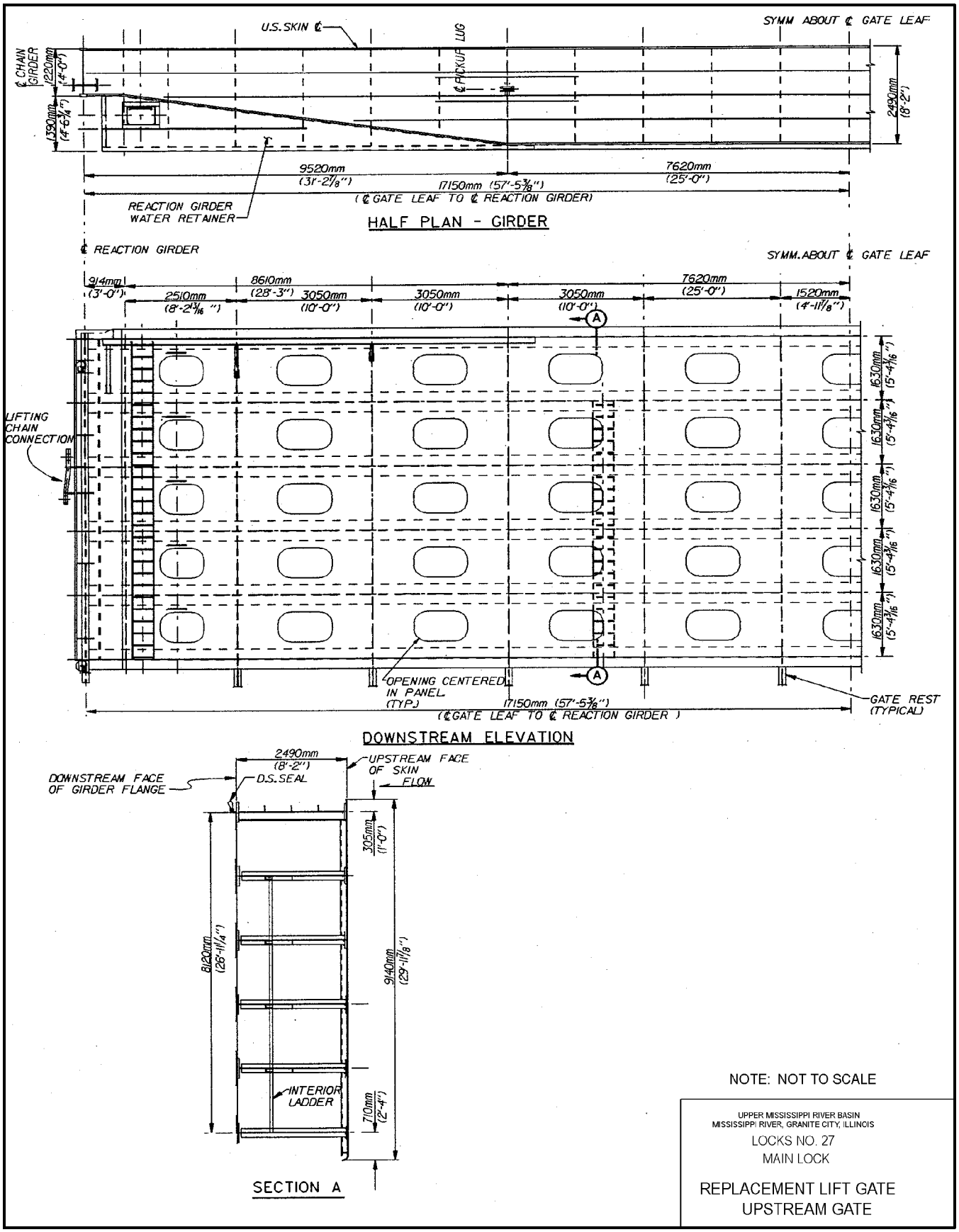

NOTE: NOT TO SCALE

UPPER MISSISSIPPI RIVER BASIN
MISSISSIPPI RIVER, GRANITE CITY, ILLINOIS
LOCKS NO. 27
MAIN LOCK

REPLACEMENT LIFT GATE
UPSTREAM GATE

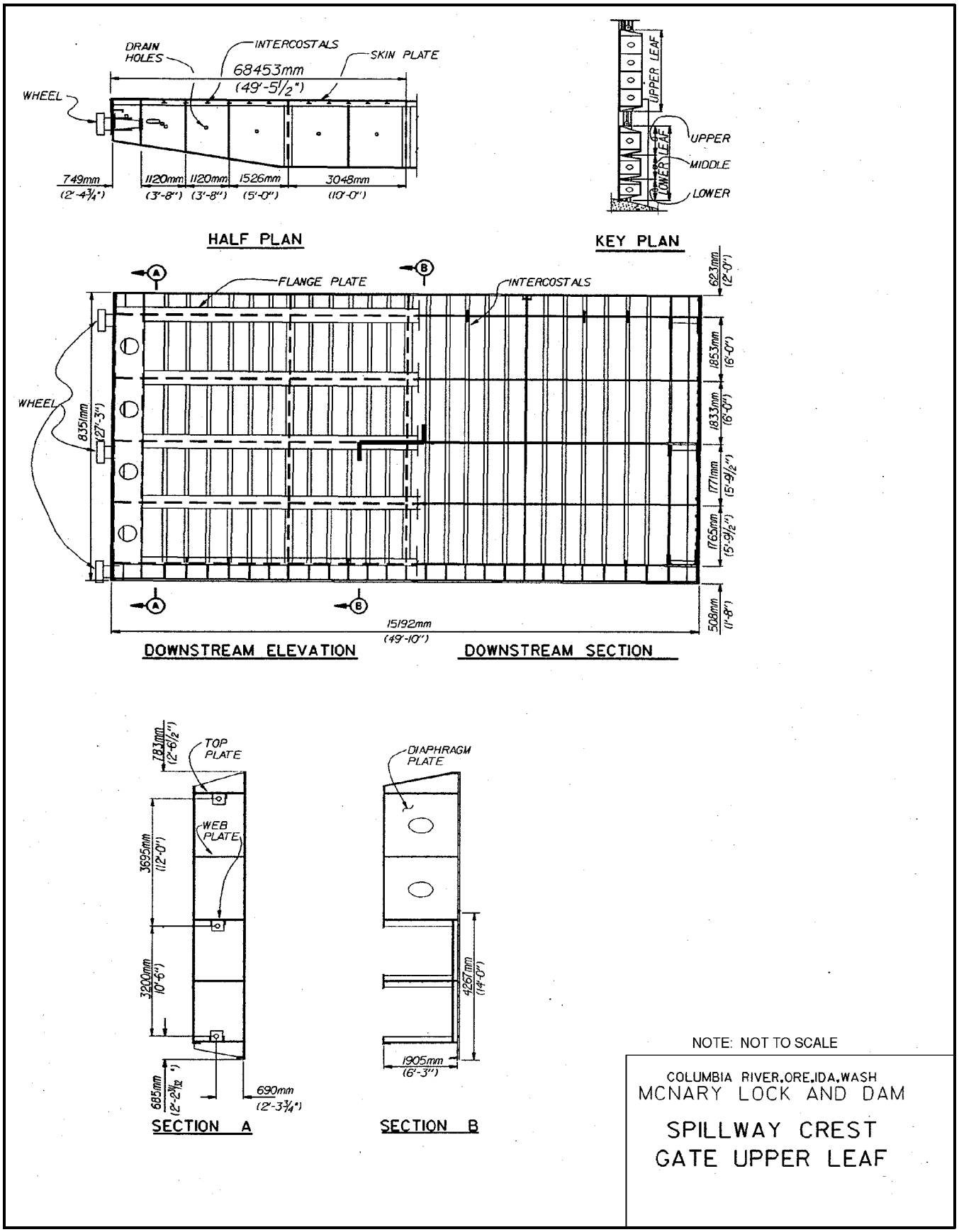
DRAIN HOLES
INTERCOSTALS
SKIN PLATE
68453mm
(49'-5 1/2")
WHEEL
749mm
(2'-4 3/4")
1120mm
(3'-8")
1120mm
(3'-8")
1526mm
(5'-0")
3048mm
(10'-0")
HALF PLAN
UPPER LEAF
LOWER LEAF
UPPER
MIDDLE
LOWER
KEY PLAN
FLANGE PLATE
INTERCOSTALS
WHEEL
8351mm
(27'-3")
623mm
(2'-0")
1853mm
(6'-0")
1833mm
(6'-0")
1771mm
(5'-9 1/2")
1765mm
(5'-9 1/2")
508mm
(1'-8")
15192mm
(49'-10")
DOWNSTREAM ELEVATION
DOWNSTREAM SECTION
783mm
(2'-6 1/2")
TOP PLATE
WEB PLATE
3695mm
(12'-0")
3200mm
(10'-6")
685mm
(2'-2 11/16")
690mm
(2'-3 3/4")
SECTION A
DIAPHRAGM PLATE
4267mm
(14'-0")
1905mm
(6'-3")
SECTION B
NOTE: NOT TO SCALE
COLUMBIA RIVER, ORE. IDA. WASH
MCNARY LOCK AND DAM
SPILLWAY CREST
GATE UPPER LEAF

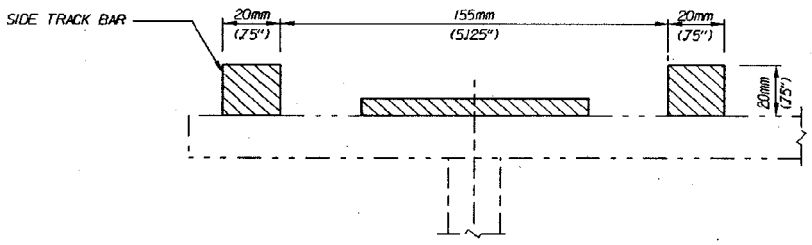

UPSTREAM ROLLER TRACK

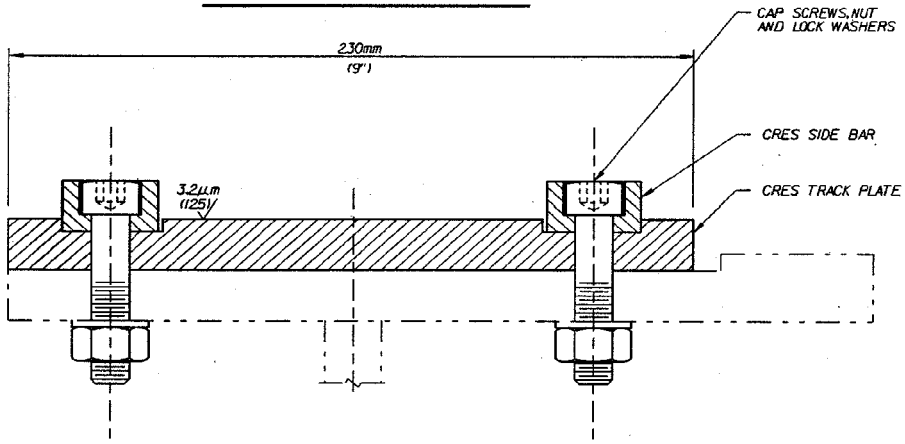

DOWNSTREAM ROLLER TRACK

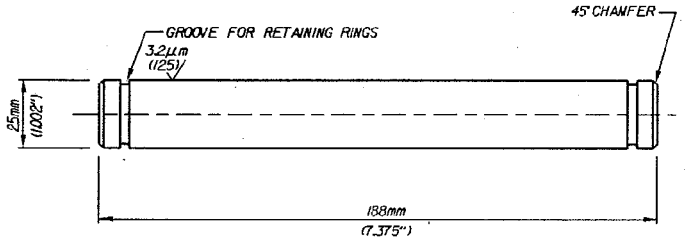

ROLLER PIN

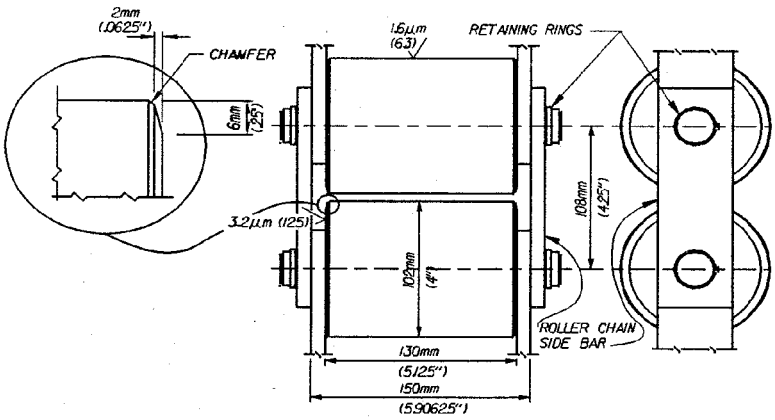

TYPICAL ROLLER ASSEMBLY

CRES = CORROSION RESISTANT STEEL

NOTE: NOT TO SCALE

TRACTOR GATE
CHAIN AND ROLLER
TRACK DETAILS

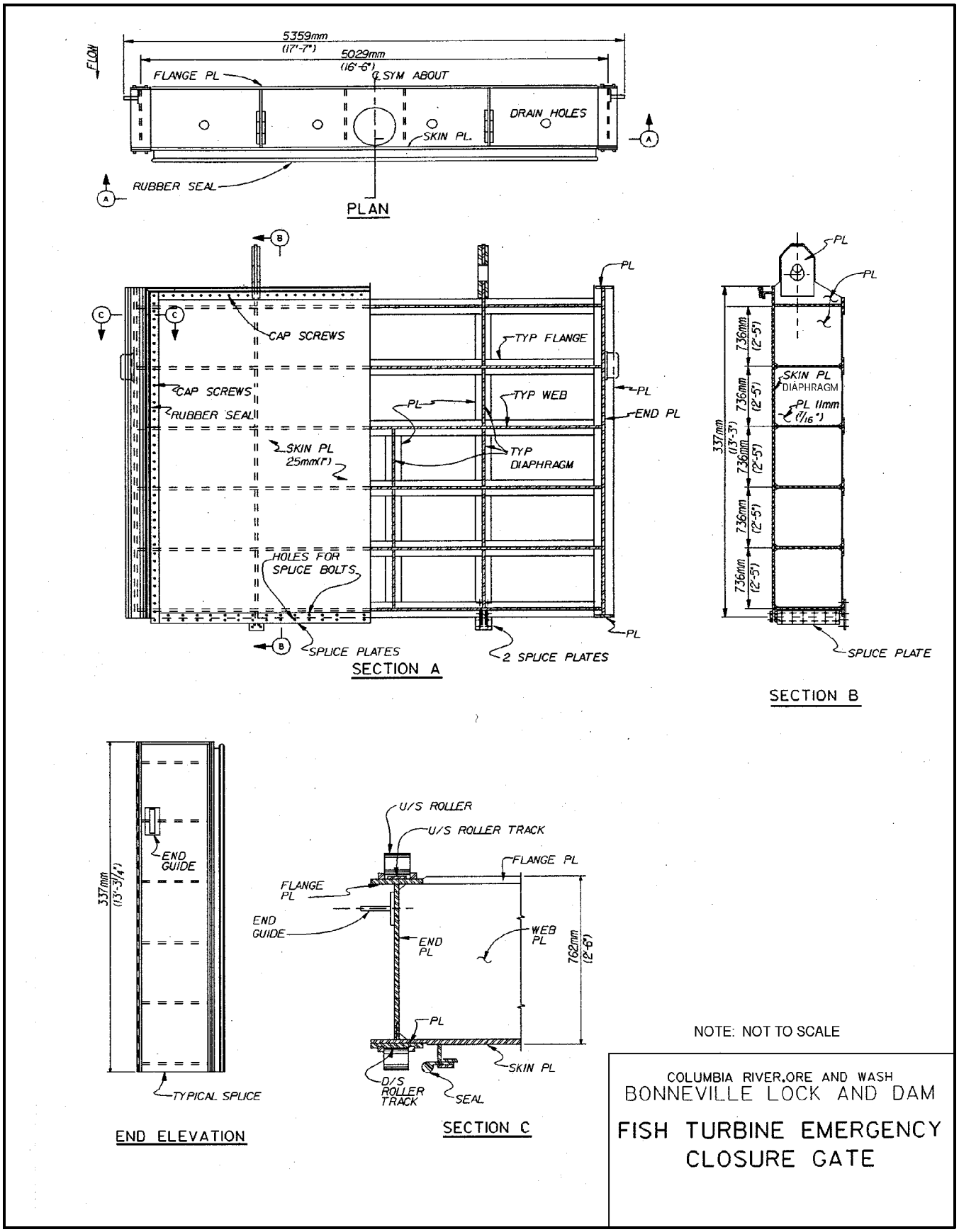
5359mm
(17'-7")
5029mm
(16'-6")
FLOW
FLANGE PL
℄ SYM ABOUT
DRAIN HOLES
SKIN PL.
RUBBER SEAL
PLAN
CAP SCREWS
CAP SCREWS
RUBBER SEAL
SKIN PL
25mm(1")
HOLES FOR
SPLICE BOLTS
SPLICE PLATES
TYP FLANGE
TYP WEB
TYP
DIAPHRAGM
PL
END PL
2 SPLICE PLATES
SECTION A
SKIN PL
DIAPHRAGM
PL 11mm
(11/16")
736mm
(2'-5")
337mm
(13'-3")
SPLICE PLATE
SECTION B
END
GUIDE
337mm
(13'-3/4")
TYPICAL SPLICE
END ELEVATION
U/S ROLLER
U/S ROLLER TRACK
FLANGE PL
FLANGE
PL
END
GUIDE
END
PL
WEB
PL
762mm
(2'-6")
SKIN PL
D/S
ROLLER
TRACK
SEAL
SECTION C
NOTE: NOT TO SCALE
COLUMBIA RIVER,ORE AND WASH
BONNEVILLE LOCK AND DAM
FISH TURBINE EMERGENCY
CLOSURE GATE

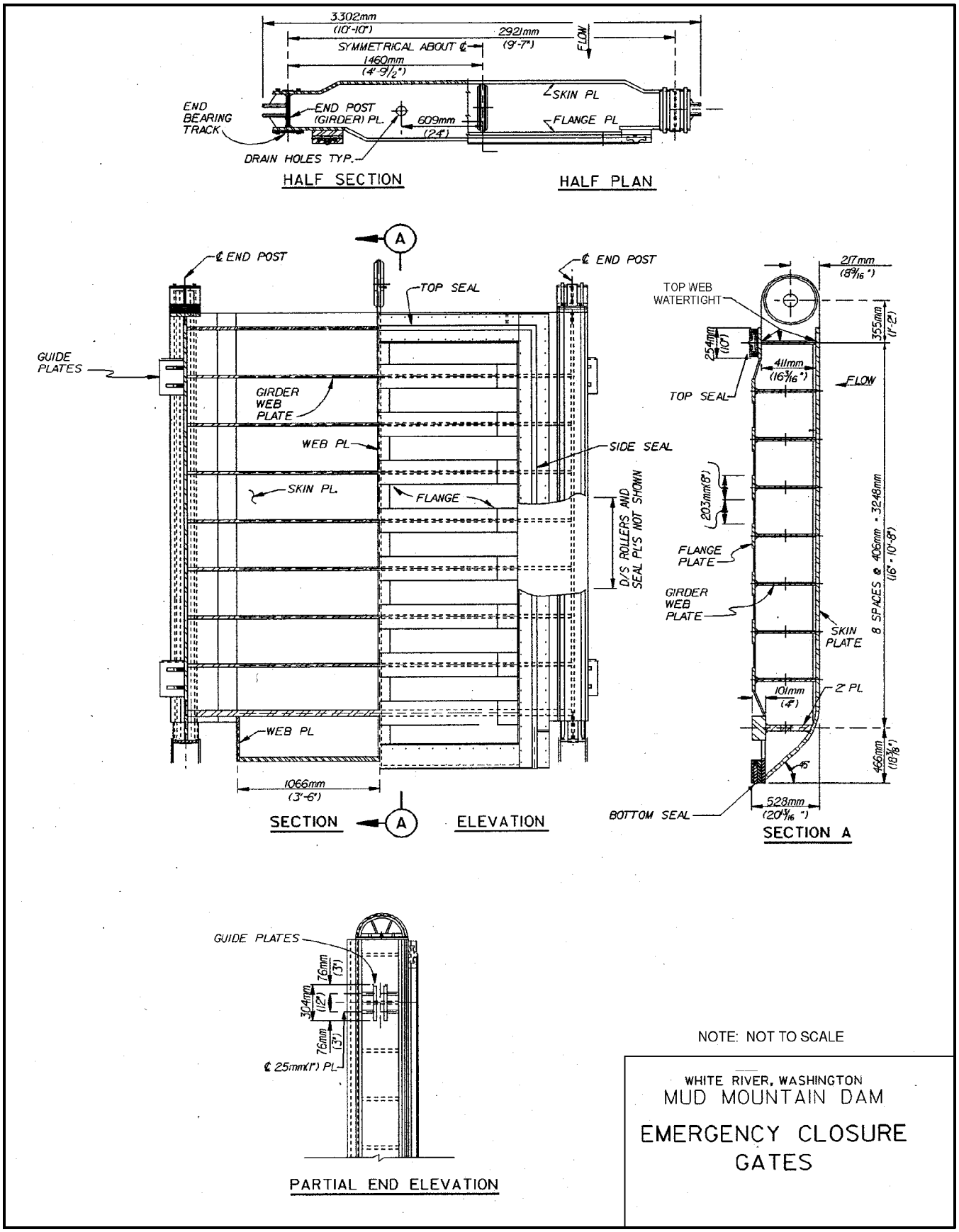
3302mm
(10'-10")
2921mm
(9'-7")
FLOW
SYMMETRICAL ABOUT ℄
1460mm
(4'-9 1/2")
END BEARING TRACK
END POST (GIRDER) PL.
609mm
(24")
SKIN PL
FLANGE PL
DRAIN HOLES TYP.
HALF SECTION
HALF PLAN
A
℄ END POST
TOP SEAL
GUIDE PLATES
GIRDER WEB PLATE
WEB PL
SKIN PL.
FLANGE
SIDE SEAL
D/S ROLLERS AND SEAL PL'S NOT SHOWN
WEB PL
1066mm
(3'-6")
SECTION
ELEVATION
217mm
(8 9/16")
TOP WEB WATERTIGHT
355mm
(1'-2")
254mm
(10")
411mm
(16 3/16")
TOP SEAL
FLOW
203mm(8")
FLANGE PLATE
GIRDER WEB PLATE
8 SPACES @ 406mm = 3248mm
(16'-10'-8")
SKIN PLATE
101mm
(4")
2" PL
466mm
(18 3/8")
45°
528mm
(20 3/16")
BOTTOM SEAL
SECTION A
GUIDE PLATES
76mm
(3")
304mm
(12")
76mm
(3")
℄ 25mm(1") PL
PARTIAL END ELEVATION
NOTE: NOT TO SCALE
WHITE RIVER, WASHINGTON
MUD MOUNTAIN DAM
EMERGENCY CLOSURE GATES

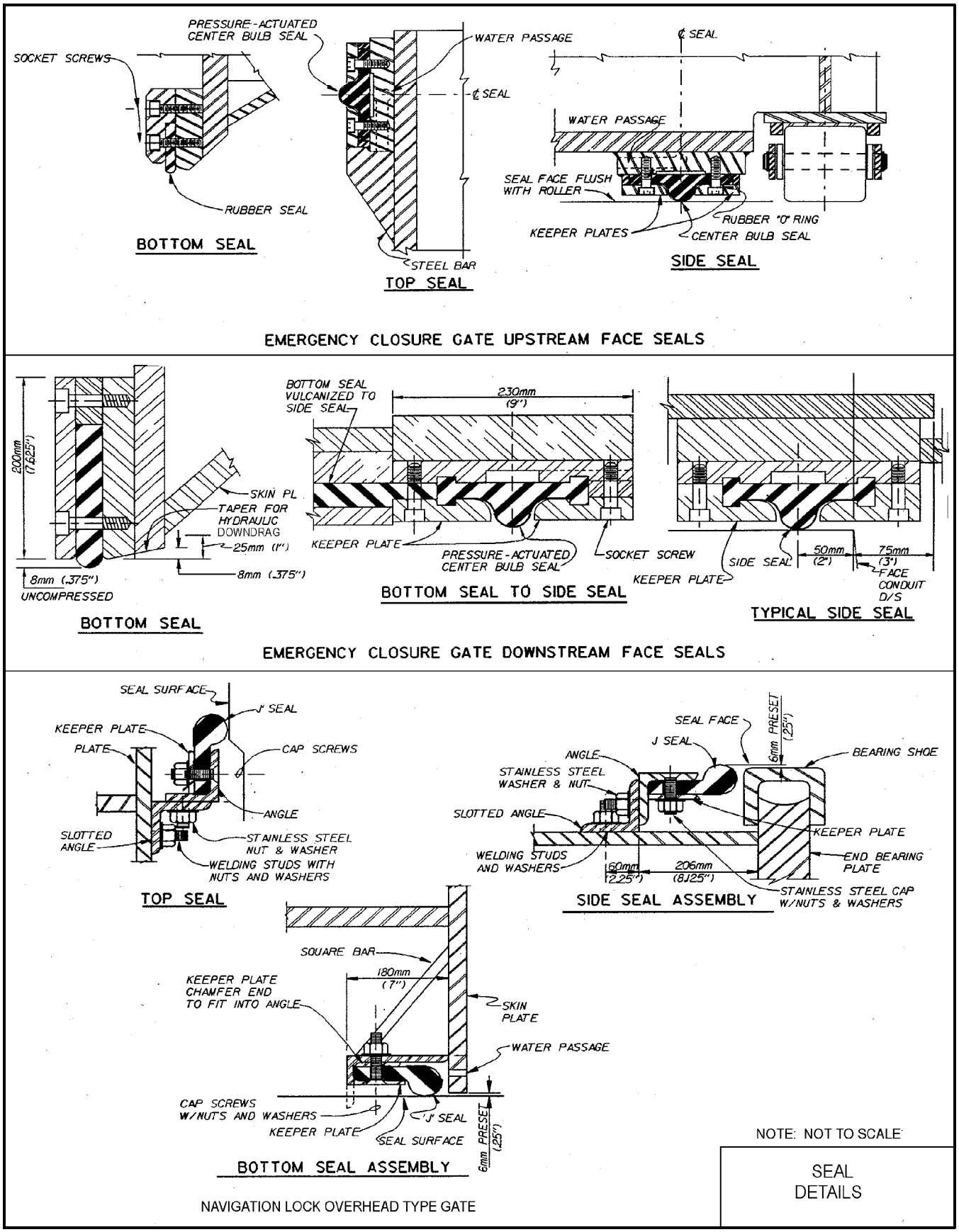
PRESSURE-ACTUATED CENTER BULB SEAL
SOCKET SCREWS
RUBBER SEAL
BOTTOM SEAL
WATER PASSAGE
℄ SEAL
STEEL BAR
TOP SEAL
℄ SEAL
WATER PASSAGE
SEAL FACE FLUSH WITH ROLLER
KEEPER PLATES
RUBBER "O" RING
CENTER BULB SEAL
SIDE SEAL
EMERGENCY CLOSURE GATE UPSTREAM FACE SEALS
200mm (7.625")
SKIN PL
TAPER FOR HYDRAULIC DOWNDRAG
25mm (1")
8mm (.375")
8mm (.375")
UNCOMPRESSED
BOTTOM SEAL
BOTTOM SEAL VULCANIZED TO SIDE SEAL
230mm (9")
KEEPER PLATE
PRESSURE-ACTUATED CENTER BULB SEAL
SOCKET SCREW
BOTTOM SEAL TO SIDE SEAL
SIDE SEAL
KEEPER PLATE
50mm (2")
75mm (3")
FACE CONDUIT D/S
TYPICAL SIDE SEAL
EMERGENCY CLOSURE GATE DOWNSTREAM FACE SEALS
SEAL SURFACE
J SEAL
KEEPER PLATE
PLATE
CAP SCREWS
ANGLE
SLOTTED ANGLE
STAINLESS STEEL NUT & WASHER
WELDING STUDS WITH NUTS AND WASHERS
TOP SEAL
SEAL FACE
J SEAL
6mm PRESET (.25")
BEARING SHOE
ANGLE
STAINLESS STEEL WASHER & NUT
SLOTTED ANGLE
KEEPER PLATE
WELDING STUDS AND WASHERS
END BEARING PLATE
60mm (2.25")
206mm (8.125")
STAINLESS STEEL CAP W/NUTS & WASHERS
SIDE SEAL ASSEMBLY
SQUARE BAR
180mm (7")
KEEPER PLATE CHAMFER END TO FIT INTO ANGLE
SKIN PLATE
WATER PASSAGE
CAP SCREWS W/NUTS AND WASHERS
J SEAL
KEEPER PLATE
SEAL SURFACE
6mm PRESET (.25")
BOTTOM SEAL ASSEMBLY
NOTE: NOT TO SCALE
SEAL DETAILS
NAVIGATION LOCK OVERHEAD TYPE GATE

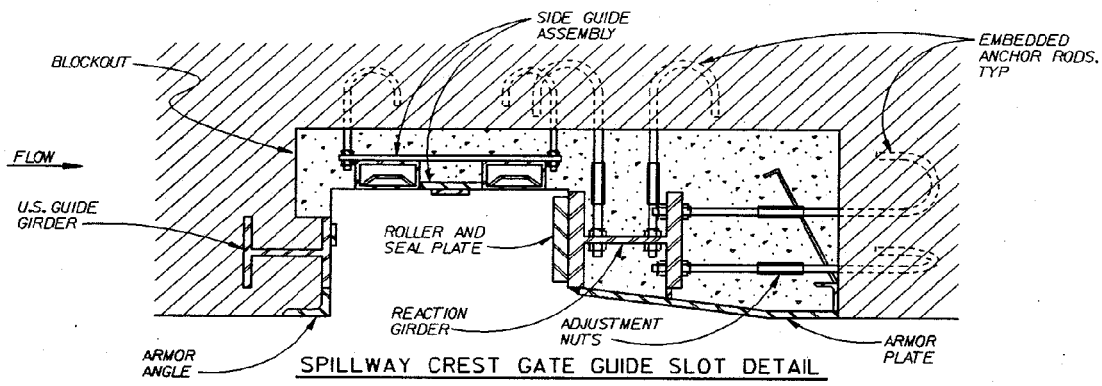

SPILLWAY CREST GATE GUIDE SLOT DETAIL

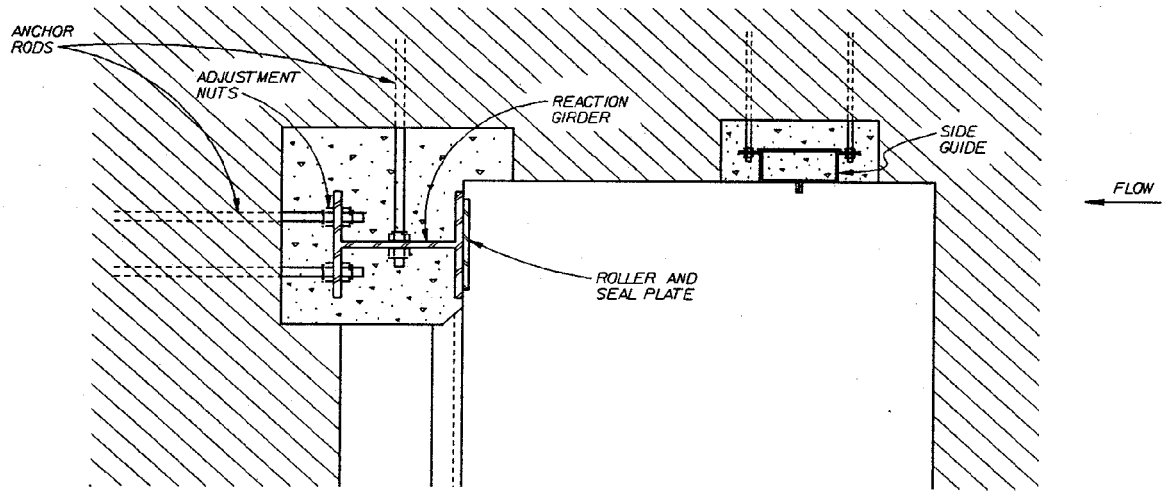

OUTLET WORKS GUIDE SLOT DETAIL

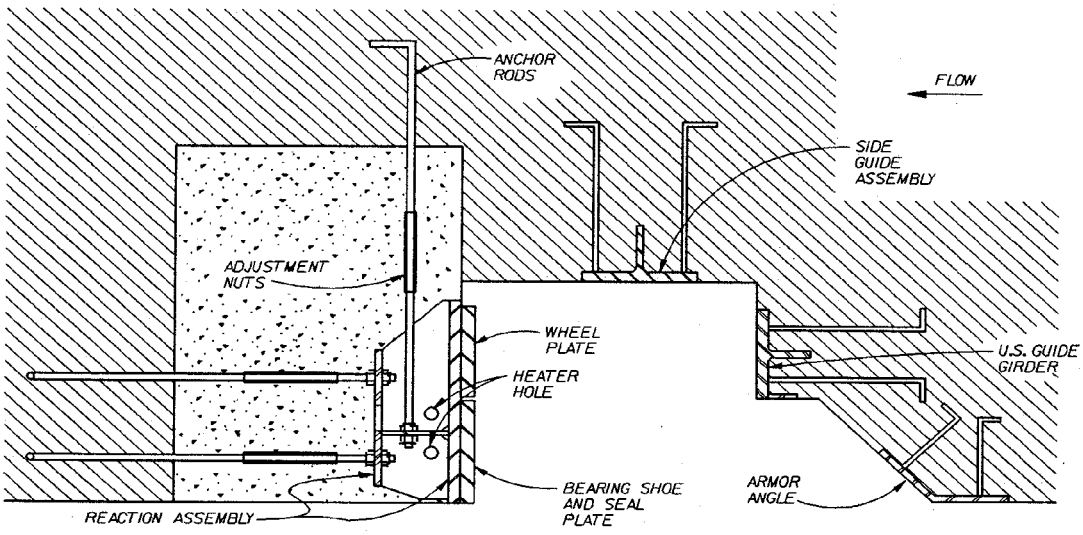

NAVIGATION LOCK OVERHEAD LIFT GATE GUIDE SLOT DETAIL

NOTE: NOT TO SCALE

GUIDE DETAILS

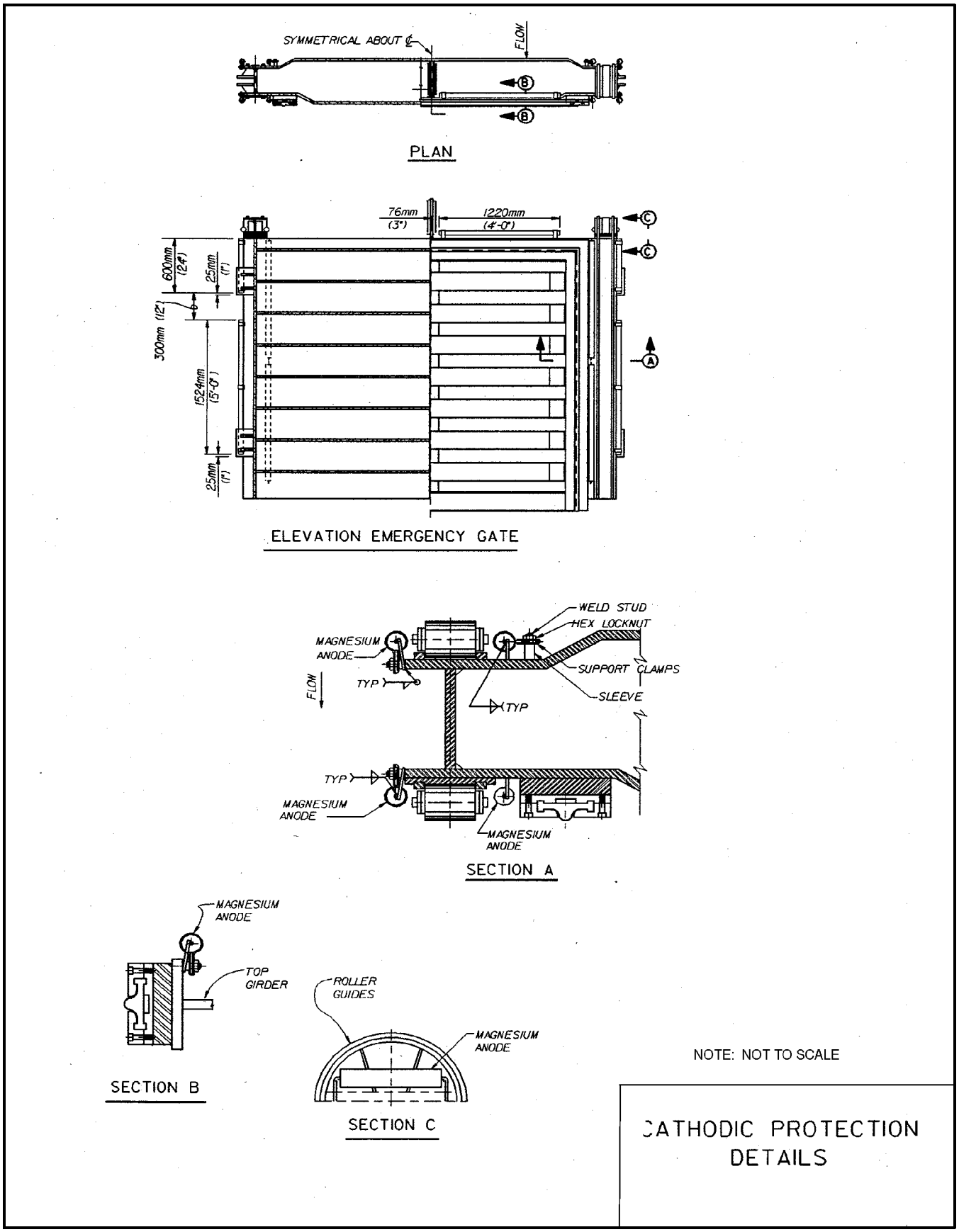
SYMMETRICAL ABOUT ℄
FLOW
PLAN
76mm (3")
1220mm (4'-0")
600mm (24")
25mm (1")
300mm (12")
1524mm (15'-0")
25mm (1")
ELEVATION EMERGENCY GATE
WELD STUD
HEX LOCKNUT
MAGNESIUM ANODE
SUPPORT CLAMPS
SLEEVE
FLOW
TYP
TYP
TYP
MAGNESIUM ANODE
MAGNESIUM ANODE
SECTION A
MAGNESIUM ANODE
TOP GIRDER
SECTION B
ROLLER GUIDES
MAGNESIUM ANODE
SECTION C
NOTE: NOT TO SCALE
CATHODIC PROTECTION DETAILS