CECW-ED 11 June 1990

Errata Sheet

No. 1

ENGINEERING AND DESIGN

Design of Sheet Pile Cellular Structures

EM 1110-2-2503

29 September 1989

Cover Letter: Replace unsigned letter with the enclosed signed letter.

Page A-l: Delete Reference 16. EM 1110-2-2501 has been superceded by EM 1110-2-2502.

EM 1110-2-2503
29 September 1989

US Army Corps
of Engineers

ENGINEERING AND DESIGN

Design of Sheet Pile Cellular Structures

ENGINEER MANUAL

DEPARTMENT OF THE ARMY
U.S. Army Corps of Engineers
Washington, D.C. 20314-1000

EM 1110-2-2503

CECW-ED

Engineer Manual
No. 1110-2-2503

29 September 1989

Engineering and Design
DESIGN OF SHEET PILE CELLULAR STRUCTURES
COFFERDAMS AND RETAINING STRUCTURES

1. Purpose. Provisions for the design of sheet pile cellular cofferdams are set forth in ER 1110-2-2901. This manual is intended to provide guidance for the design of these structures. Geotechnical considerations, analysis and design procedures, construction considerations, and instrumentation are discussed. Special emphasis is placed on all aspects of cellular cofferdams, such as planning, hydraulic considerations, and layout.

2. Applicability. The provisions of this manual are applicable to all HQUSACE/OCE elements and field operating activities having civil. works responsibilities.

FOR THE COMMANDER:

ALBERT J. GENETTI, JR.
Colonel, Corps of Engineers
Chief of Staff

DEPARTMENT OF THE ARMY
U. S. Army Corps of Engineers
Washington, DC 20314-1000

CECW-ED

Engineer Manual
No. 1110-2-2503

29 September 1989

Engineering and Design
DESIGN OF SHEET PILE CELLULAR STRUCTURES COFFERDAMS AND RETAINING STRUCTURES

Table of Contents

Subject		Paragraph	Page
CHAPTER 1.	INTRODUCTION		
	Purpose	1-1	1-1
	Applicability	1-2	1-1
	References	1-3	1-1
	Definitions	1-4	1-1
	Types and Capabilities	1-5	1-1
CHAPTER 2.	PLANNING, LAYOUT, AND ELEMENTS OF COFFERDAMS		
	Areas of Consideration	2-1	2-1
	Elements of Cofferdams	2-2	2-2
CHAPTER 3.	GEOTECHNICAL CONSIDERATIONS		
Section I.	Subsurface Investigations		
	Introduction	3-1	3-1
	Preliminary Investigations	3-2	3-1
	Development of a Boring Plan	3-3	3-2
	Presentation of Data	3-4	3-4
	Investigations During and Following Construction	3-5	3-5
Section II.	Field and Laboratory Testing		
	Estimation of Engineering Properties	3-6	3-6
	Field Testing	3-7	3-6
	Field Seepage Testing	3-8	3-9
	Laboratory Testing	3-9	3-10
	Index Tests	3-10	3-10
	Engineering Property Tests	3-11	3-13
	Permeability of Soils	3-12	3-14
	Permeability of Rock	3-13	3-14
	Shear Strength--General	3-14	3-14
	Shear Strength--Sand	3-15	3-15
	Shear Strength--Clay and Silt	3-16	3-15
	Procedures	3-17	3-16

Subject		Paragraph	Page
Section III	Foundation Treatment		
	Problem Foundations and Treatment	3-18	3-18
	Grouting	3-19	3-18
Section IV.	Sources and Properties of Cell Fill		
	Borrow Area	3-20	3-22
	Location	3-21	3-22
	Selection of Cell Fill	3-22	3-22
Section V.	Seepage Control		
	Seepage Through Cell	3-23	3-23
	Foundation Underseepage	3-24	3-25
Section VI.	Seismic Considerations		
	Structure--Foundation Interaction	3-25	3-25
	Liquefaction Potential	3-26	3-25
CHAPTER 4.	ANALYSIS AND DESIGN		
Section I.	Characteristics		
	Structural Behavior	4-1	4-1
	Forces	4-2	4-1
	Equivalent Cell Width	4-3	4-1
Section II.	Loading Conditions		
	Cofferdams	4-4	4-3
	Retaining Structures	4-5	4-3
	Mooring Cells	4-6	4-5
	Lock Walls	4-7	4-5
	Spillway Weirs	4-8	4-5
Section III	Analysis of Failure Modes		
	External Cell Stability	4-9	4-5
	Deep-Seated Sliding Analysis	4-10	4-17
	Bearing Capacity Analysis	4-11	4-21
	Settlement Analysis	4-12	4-25
	Seepage Analysis	4-13	4-35
	Internal Cell Stability	4-14	4-40
Section IV.	Design Criteria		
	Factors of Safety	4-15	4-53
	Steel Sheet Piling Specifications	4-16	4-53
	Corrosion Mitigation	4-17	4-55
Section V.	Finite Element Method (FEM) for Analysis and Design		
	Background	4-18	4-55
	Finite Element Cofferdam Models	4-19	4-56
	Estimates of Cell Deformations	4-20	4-63
	Structural Continuity Between Cells and Arcs	4-21	4-64
	Structure--Foundation Interaction	4-22	4-65
	Fill Interaction Between Cells and Arcs	4-23	4-65
	Special Cofferdam Configurations	4-24	4-65
	Research and Modeling Developments	4-25	4-66

	Subject	Paragraph	Page
CHAPTER 5.	ENGINEERING CONSIDERATIONS PERTAINING TO CONSTRUCTION		
	General	5-1	5-1
	Failures	5-2	5-1
	Recommended Practices	5-3	5-3
CHAPTER 6.	DEWATERING AND PRESSURE RELIEF		
	Purpose of Design	6-1	6-1
	Dewatering and Pressure Relief	6-2	6-1
	Surface Water Control	6-3	6-3
	Emergency Flooding	6-4	6-3
CHAPTER 7.	INSTRUMENTATION		
	Systematic Monitoring	7-1	7-1
	Proper Planning	7-2	7-1
	Purpose of Instrumentation	7-3	7-2
	Types of Instruments	7-4	7-3
	Accuracy of Required Measurements	7-5	7-6
	Collection, Processing, and Evaluation of Data	7-6	7-8
	Example of Instrumentation	7-7	7-9
APPENDIX A.	REFERENCES AND BIBLIOGRAPHY		A-l
APPENDIX B.	SYMBOLS AND SLIDING STABILITY ANALYSIS OF A GENERAL WEDGE SYSTEM		B-l
APPENDIX c.	EXAMPLE PROBLEMS		C-l

CHAPTER 1

INTRODUCTION

1-1. Purpose. Provisions for the design of sheet pile cellular cofferdams are set forth in ER 1110-2-2901. This manual is intended to provide guidance for the design of these structures. Geotechnical considerations, analysis and design procedures, construction considerations, and instrumentation are discussed. Special emphasis is placed on all aspects of cellular cofferdams, such as planning, hydraulic considerations, and layout.

1-2. Applicability. The provisions of this manual are applicable to all divisions and districts having civil works responsibilities.

1-3. References. References and bibliographical material are listed in Appendix A. The references are referred to by the official number and bibliographical items are cited in the text by numbers (item 1, 2, etc.) that correspond to items in Appendix A-2.

1-4. Definitions. A list of symbols with their definitions relating to Chapter 4, Paragraph 4-9, is shown in Appendix B.

1-5. Types and Capabilities.

a. Uses. Sheet pile cellular structures are used in a variety of ways, one of the principal uses being for cofferdams.

(1) Cofferdams. When an excavation is in a large area overlain by water, such as a river or lake, cellular cofferdams are widely used to form a water barrier, thus providing a dry work area. Cellular structures are economical for this type of construction since stability is achieved relatively inexpensively by using the soil cell fill for mass. Ring or membrane tensile stresses are used in the interlocking steel sheet piling to effect a soil container. The same sheet piling may be pulled and reused unless it has been damaged from driving into boulders or dense soil deposits. Driving damage is not usually a major problem since it is rarely necessary to drive the piling to great depths in soil.

(2) Retaining Walls and Other Structures. Sheet pile cellular structures are also used for retaining walls; fixed crest dams and weirs; lock, guide, guard, and approach walls; and substructures for concrete gravity superstructures. Each of these structures can be built in the wet, thus eliminating the need for dewatering. When used as substructures, the cells can be relied upon to support moderate loads from concrete superstructures. Varying designs have been used to support the concrete loads, either on the fill or on the piling. When danger of rupture from large impact exists, the cells should be filled with tremie concrete. In the case of concrete guard walls for navigation locks, bearing piles have been driven within the cells to provide added lateral support for the load with the cell fill. Precautions must be taken to prevent loss of the fill which could result in instability of the

pile-supported structure. Bearing piles driven within the cells should never be used to support structures subjected to lateral loads.

b. Types. There are three general types of cellular structures, each depending on the weight and strength of the fill for its stability. For typical arrangement of the three types of cells, see Figure 1-1.

(1) Circular Cells. This type consists of a series of complete circular cells connected by shorter arcs. These arcs generally intercept the cells at a point making an angle of 30 or 45 degrees with the longitudinal axis of the cofferdam. The primary advantages of circular cells are that each cell is independent of the adjacent cells, it can be filled as soon as it is constructed, and it is easier to form by means of templates.

(2) Diaphragm Cells. These cells are comprised of a series of circular arcs connected by 120-degree intersection pieces or crosswalls (diaphragms). The radius of the arc is often made equal to the cell width so that there is equal tension in the arc and the diaphragm. The diaphragm cell will distort excessively unless the various units are filled essentially simultaneously with not over 5 feet of differential soil height in adjacent cells. Diaphragm cells are not independently stable and failure of one cell could lead to failure of the entire cofferdam.

(3) Cloverleaf Cells. This type of cell consists of four arc walls, within each of the four quadrants, formed by two straight diaphragm walls normal to each other, and intersecting at the center of the cell. Adjacent cells are connected by short arc walls and are proportioned so that the intersection of arcs and diaphragms forms three angles of 120 degrees. The cloverleaf is used when a large cell width is required for stability against a high head of water. This type has the advantage of stability over the individual cells, but has the disadvantage of being difficult to form by means of templates. An additional drawback is the requirement that the separate compartments be filled so that differential soil height does not exceed 5 feet.

c. Design Philosophy.

(1) Cellular cofferdams, in most instances, serve as a high head or moderately high head dam for extended periods of time, protecting personnel, equipment, and completed work and maintaining the navigation pool. Planning, design, and construction of these structures must be accomplished by the same procedures and with the same high level of engineering competency as those required for permanent features of the work. Adequate foundation investigation and laboratory testing must be performed to determine soil and foundation parameters affecting the integrity of the cofferdam. Hydraulic and hydrologic design studies must be conducted to determine the most economical layout.

(2) The analytical design of cellular cofferdams requires close coordination between the structural engineer and the geotechnical engineer. Close coordination is necessary, not only for the soil and foundation investigations noted above, but also to ensure that design strengths are applied correctly

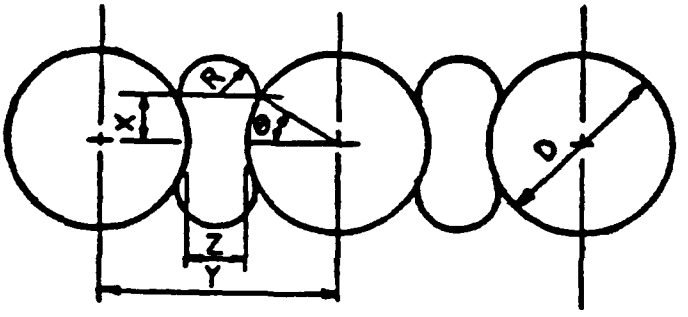

a. Plan circular cell

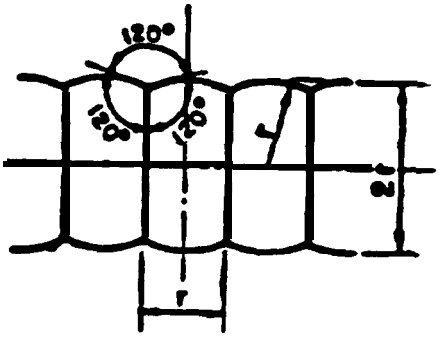

b. Plan arc and diaphragm cell

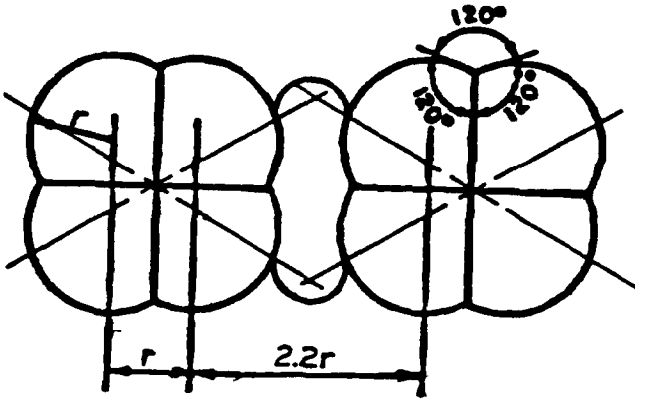

c. Plan clover leaf cell

Figure 1-1. Typical arrangement of circular, diaphragm, and cloverleaf cells

and that assumptions used in the design, such as the saturation level within the cell fill, are realistic. Though cofferdams are often referred to as temporary structures, their importance, as explained above, requires that they be designed for the same factors of safety as those required for permanent structures.

(3) To ensure compliance with all design requirements and conformity with safe construction practices, the cellular cofferdam construction should be subjected to intensive inspection by both construction and design personnel. Periodic and timely visits by design personnel to the construction site are required to ensure that: site conditions throughout the construction period are in conformance with design assumptions, contract plans, and specifications; project personnel are given assistance in adapting the plans and specifications to actual site conditions as they are revealed during construction; and any engineering problems not fully assessed in the original design are observed and evaluated, and appropriate action is taken. Coordination between construction and design should be sufficient to enable design personnel to respond in a timely manner when changed field conditions require modifications of design.

(4) Not all features of a construction cofferdam will be designed by the Government. In particular, the design of the dewatering system, generally, will be the responsibility of the contractor so that the contractor can utilize his particular expertise and equipment. However, the dewatering system must be designed to be consistent with the assumptions made in the cofferdam design, including the elevation of the saturation level within the cell fill and the rate of dewatering. To achieve this, the requirements for the dewatering system must be explicitly stated in the contract specifications, and the contractor's design must be carefully reviewed by the cofferdam designer to ensure that the intent and provisions of the specifications are met.

CHAPTER 2

PLANNING, LAYOUT, AND ELEMENTS OF COFFERDAMS

2-1. Areas of Consideration. For a construction cofferdam to be functional, it must provide a work area free from frequent flooding and of sufficient size to allow for necessary construction activities. These two objectives are dependent on several factors and are interrelated as described below.

a. Height of Protection. The top of the cofferdam should be established so that a dry working area can be economically maintained. To establish an economical top elevation for cofferdam and flooding frequency, stage occurrence and duration data covering the practical range of cofferdam heights must be evaluated, taking into account the required life of the cofferdam. Factors which affect the practical range of cofferdam heights include: effects on channel width to accommodate streamflow and navigation where required; increased flow velocity during high river stages and the resultant scour; effects on completed adjacent structures to which the cofferdam joins (the "tie-in"), i.e., these structures must be designed to resist pools to top of cofferdam; and practical limitations on the size of cell due to interlock stresses and sliding stability. By comparing these factors with the effects of lost time and dewatering and cleanup costs resulting from flooding, an economical top elevation of cofferdam can be established.

b. Area of Enclosure. The area enclosed by the cofferdam should be minimized for reasons of economy but should be consistent with construction requirements. The area often will be limited by the need to maintain a minimum channel width and control scour and to minimize those portions of completed structures affected by the tie-in. The minimum area provided must be sufficient to accommodate berms, access roads, an internal drainage system, and a reasonable working area. Minimum functional area requirements should be established in coordination with construction personnel.

c. Staging. When constructing a cofferdam in a river, the flow must continue to be passed and navigation maintained. Therefore, the construction must be accomplished in stages, passing the water temporarily through the completed work, and making provisions for a navigable channel. The number of stages should be limited because of the costs and time delays associated with the removal of the cells in a completed stage and the construction of the cells for the following stage. However, the number of stages must be consistent with the need to minimize streamflow velocities and their associated effects on scour, streambank erosion, upstream flooding, and navigation. When developing the layout for a multistage cofferdam, special attention should be given to maximizing the number of items common to each stage of the cofferdam. With proper planning some cells may be used for two subsequent stages. In those cells that will be common to more than one stage, the connecting tees or wyes that are to be utilized in a future stage must be located with care.

d. Hydraulic Model Studies. Hydraulic model studies are often necessary to develop the optimum cofferdam layout, particularly for a multistage

cofferdam. From these studies, currents which might adversely affect navigation, the potential for scour, and various remedies can be determined.

2-2. Elements of Cofferdams.

a. Scour Protection. Flowing water can seriously damage a cofferdam cell by undermining and the subsequent loss of cell fill. Still further, scour caused by flowing water can lead to damage by increased underseepage and increased interlock stresses. The potential for this type of damage is dependent upon the velocity of the water, the eddies produced, and the erodibility of the foundation material. Damage can be prevented by protecting the foundation outside of the cell with riprap or by driving the piling to a sufficient depth beneath the anticipated scour. Deflectors designed to streamline flow are effective in minimizing scour along the face of the cofferdam. These deflectors consist of a curved sheet pile wall, with appropriate bracing, extending into the river from the outer upstream and downstream corners of the cofferdam. Figure 2-1 shows a schematic deflector layout. As noted previously, hydraulic model studies are useful in predicting the potential for scour and in developing the most efficient deflector geometry. For a detailed discussion of deflectors, refer to EM 1110-2-1611.

b. Berms. A soil berm may be constructed inside the cells to provide additional sliding and overturning resistance. The berm will also serve to lengthen the seepage path and decrease the upward seepage gradients on the interior of the cells. However, a berm will require a larger cofferdam enclosure and an increase in the overall length of the cofferdam, and will increase construction and maintenance costs. Also, an inside berm inhibits inspection of the inside piling for driving damage and makes cell drainage maintenance more difficult. It is generally advisable, therefore, to increase the diameter of the cells instead of constructing a berm to achieve stability since the amount of piling per lineal foot of cofferdam is, essentially, independent of the diameter of the cells. Any increase in the diameter of the cells must be within the limitations of the maximum allowable interlock stress, as discussed in Chapter 4. In order for a berm to function as designed, the berm must be constantly maintained and protected against erosion and the degree of saturation must be consistent with design assumptions. Berm material properties and design procedures are discussed in Chapters 3 and 4.

c. Flooding Facilities. Flooding of a cofferdam by overtopping can cause serious damage to the cofferdam, perhaps even failure. An overflow can wash fill material from the cells and erode berm material. Before overtopping occurs, the cofferdam should therefore be filled with water in a controlled manner by providing floodgates or sluiceways. The floodgates or sluiceways can also be used to facilitate removal of the cofferdam by flooding. Floodgates are constructed in one or more of the connecting arcs by cutting the piling at the appropriate elevation and capping the arc with concrete to provide a nonerodible surface. Control is maintained by installing timber needle beams that can be removed when flooding is desired. Figure 2-2 shows a typical floodgate arrangement. Sluiceways consist of a steel pipe placed through a hole cut in the piling of a connecting arc. Flow is controlled by means of

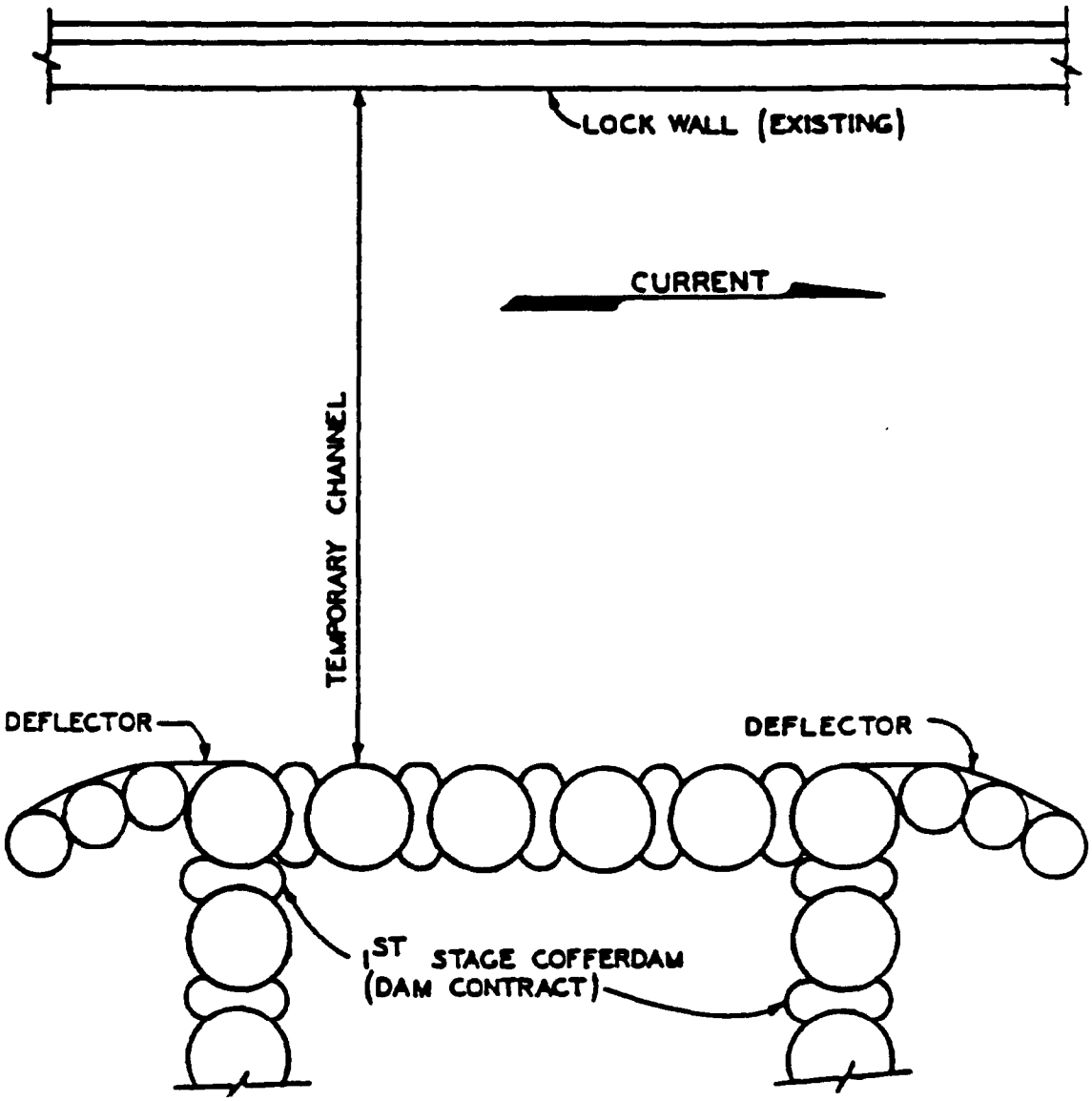

Figure 2-1. Schematic deflector layout

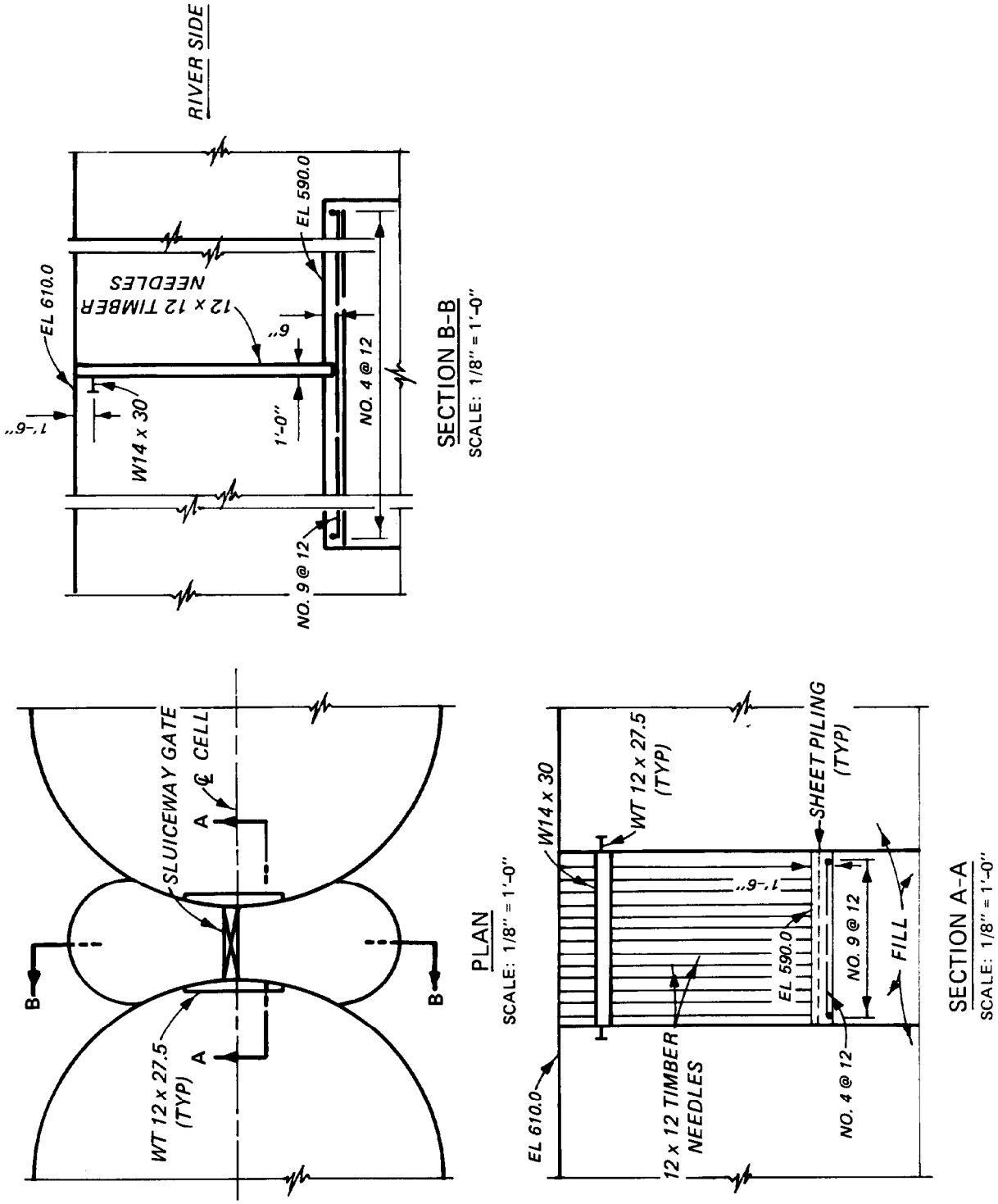

Figure 2-2. Typical floodgate arrangement

a slidegate or valve operated from the top of the cell. The size, number, and invert elevations of the flooding facilities are determined by comparing the volume to be filled with the probable rate of rise of the river. These elements must be sized so that it is possible to flood the cofferdam before it is overtopped. For either system, the adjacent berm must be protected against the flows by means of a concrete flume, a splashpad, or heavy stone.

d. Tie-ins. Cofferdams often must be connected to land and to completed portions of the structure.

(1) Tie-in to Land. Where the cofferdam joins a steep sloping shoreline, the first cell is usually located at a point where the top of the cell intersects the sloping bank. A single wall of steel sheet piling connected to the cell and extending landward to form a cutoff wall is often required to increase the seepage path and reduce the velocity of the water. The length of the cutoff wall will depend upon the permeability of the overburden. The wall should be driven to rock or to a depth in overburden as required by the permeability of the overburden. The depths of overburden into which the cells and cutoff wall are driven should be limited to 30 feet in order to prevent driving the piling out of interlock. Otherwise, it will be necessary to excavate a portion of the overburden prior to driving the piling. Where the cofferdam abuts a wide floodplain which is lower than the top of the cofferdam cells, protection from floodwaters along the land side can be obtained by constructing an earth dike with a steel sheet pile cutoff wall. The dike may join the upstream and downstream arms of the cofferdam or extend from the end of the cofferdam into the bank, depending upon the type of overburden, location of rock, and extent of the floodplain.

(2) Tie-in to Existing Structures. Tie-ins to a vertical face of a structure can be accomplished by embedding a section of sheet piling in the structure to which a tee pile in the cell can be connected. Another method of tie-in to a vertical face consists of wedging a shaped-to-fit timber beam between the cell and the vertical face. As the cofferdam enclosure is dewatered, the hydrostatic pressure outside the cofferdam seats the beam, thus creating a seal. Tie-ins to a sloping face are somewhat more complicated, and it is necessary to develop details to fit each individual configuration. The most common schemes consist of timber bulkheads or timber cribs tailored to fit the sloping face. See Figure 2-3 for typical tie-in details.

e. Cell Layout and Geometry. The cofferdam layout, generally, should utilize only one cell size which satisfies all design requirements. In some areas it might be possible to meet all stability requirements with smaller cells; however, the additional costs resulting from the construction and use of more than one size template will usually exceed the additional cost of an increase in the cell diameter. The geometry of the various cell types was discussed in Chapter 1. For individual cell and connecting arc geometry, the arrangements and criteria contained in the Steel Sheet Piling Handbook published by the U. S. Steel Corporation (items 87 and 88) are recommended. These suggested arrangements should, however, be modified to require an odd number of piles between the connecting wyes or tees as shown in Figure 2-4.

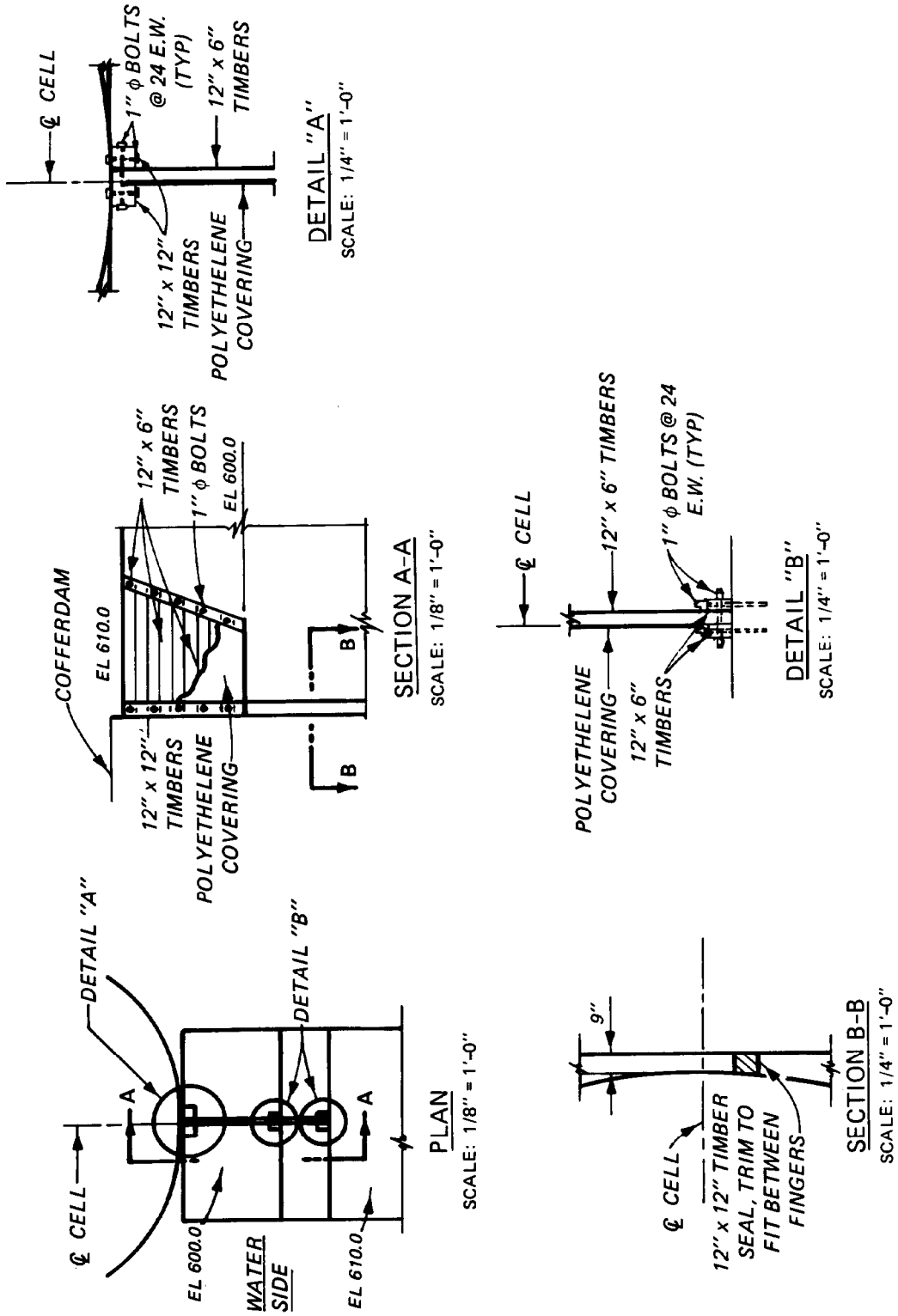

Figure 2-3. Typical tie-in details

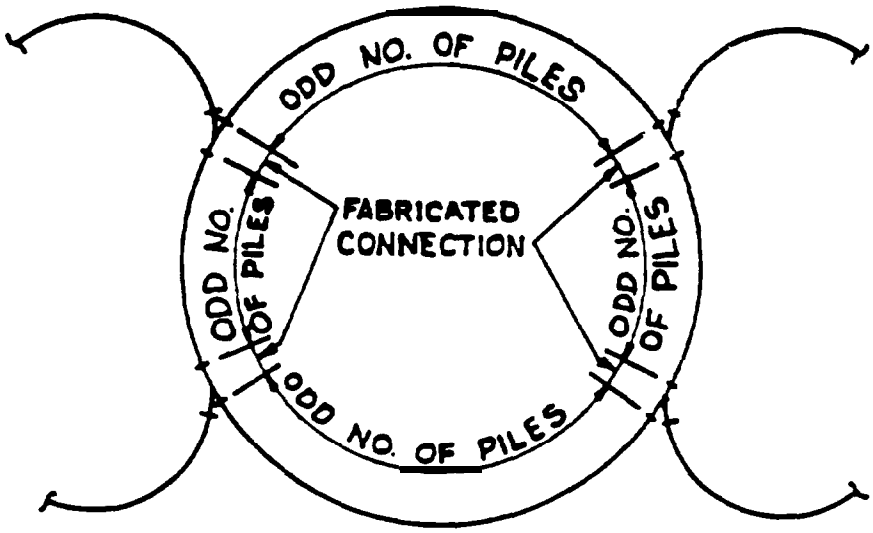

Figure 2-4. Arrangements of connecting wyes and tees

This will allow the use of only one type of fabricated wye or tee rather than two types if an even number of piles are used between connections. Although two additional piles might be required for each cell, this cost would be offset by the ease of checking shop drawings and simplifying construction, i.e., the tees or wyes could not be placed and driven in the wrong location. In developing details for other configurations, special attention should be given to the location of tees or wyes and the number of piles between connections.

f. Protection and Safety Features. Other features which must be considered in the planning and layout of a cofferdam include: a rock or concrete cap on the cell to protect the cell fill from erosion and to provide a suitable surface for construction equipment; personnel safety facilities including sufficient stairways and an alarm system; and navigation warnings, including painting of cells, reflective panels, and navigation lights.

CHAPTER 3

GEOTECHNICAL CONSIDERATIONS

Section I. Subsurface Investigations

3-1. Introduction.

a. The planning, design, and construction of cofferdams should be approached as though the cofferdam is the primary structure of the project, the end result rather than the means to an end. The same degree of care, particularity, and competence should be exercised with the cofferdam as with the main structure. This necessarily involves detailed investigations because the foundation conditions, perhaps more than any other factor, impact on the cost and degree of difficulty in construction and eventual integrity of the cofferdam. Though impractical, if not impossible, to accurately determine all of the subsurface details, the major details should be determined to avoid needless delays and claims as well as possible failure resulting from inadequate subsurface investigations.

b. The investigative program should be such that the cofferdam investigations form an integral part of the overall program for the main structure. By integrating the investigative programs for the various structures, the use of resources and information is maximized. Typically, there are three main investigative stages in the development of a project: the survey investigation which is a combination reconnaissance and feasibility stage made prior to Congressional authorization to determine the most favorable site, engineering feasibility, and costs; the definite project or specifications investigation which is made after Congressional authorization to provide required geologic and foundation data for preparation of contract plans and specifications; and the construction investigation which is made as the work progresses to fill in details.

3-2. Preliminary Investigations.

a. Office Studies. Office studies of the general area of the cofferdam location should be initiated prior to any field work. These preliminary studies should include a review of all geotechnical data compiled during the survey investigation stage for the project, including reports, maps, and aerial photographs. The investigation should include a study of the topography, physiography, geologic history, stratigraphy, geologic structure, petrography, and ground-water conditions. This information should include: bedrock type, occurrence, and general structural relationship; leakage and foundation problems possible if soluble rocks are present; possible results of glaciation (buried valleys, pervious divides, lacustrine deposits); presence or absence of faults and associated earthquake problems; extent of weathering; depth and character of overburden materials; general ground-water conditions; and availability of sources of construction materials. It is essential that the

regional and local geology be known and understood prior to developing and implementing a plan of subsurface investigation.

b. Field Studies. As with the office studies, field reconnaissance and, perhaps, a limited number of subsurface borings and geophysical studies are conducted for the survey investigation. The results of those initial field studies should be incorporated into investigations which are designed to reveal specific information on the cofferdam foundation conditions. The resulting information should include if possible: nature and thickness of the overburden; maps of rock outcrops denoting type and condition of rock, discontinuities, presence or absence of geologic structure; and preliminary ground-water conditions.

3-3. Development of a Boring Plan.

a. Preliminary. After a careful evaluation of all available site data, a limited number of borings should be laid out along the center line of the proposed cofferdam location.

(1) This initial exploration can ordinarily be accomplished with split-spoon standard penetration sampling of the overburden and NX-size diamond coring of the bedrock, supplemented by a number of borings drilled with non-sampling equipment such as roller rock bits. Standard penetration resistances should be obtained at least at 5-foot-depth intervals or at material changes, whichever is the lesser. The NX-size (or comparable wireline equipment) is the smallest size coring equipment that should be used, and only then if acceptable recovery is obtained. The nonsampled borings will provide information on the overburden thickness, the presence or absence of boulders, and the top of rock configuration. A number of the borings should be selected to remain open and function as piezometers to provide ground-water data. If available, downhole geophysical equipment should be used to obtain additional data from each hole. The type of probes used will be necessarily dependent on the foundation material. For example, a gamma probe would be one of the most useful tools in logging interbeds of sand and clay or limestone and shale while a caliper probe might prove invaluable in cavernous limestone. Other important geophysical instruments that might be utilized for the preliminary investigative stage are the portable seismograph and the electrical resistivity instrument. EM 1110-l-1802 covers other methods that are useful. The portable seismograph may be used to obtain information on the bedrock surface that will be invaluable in planning the detailed exploration. The electrical resistivity apparatus may be used to determine approximate depths of weathering, the extent of buried gravel deposits, and the ground-water table. In using these instruments, the investigator must keep in mind that data derived from such tools are general in nature and intended to be used as supplemental data. Care must be exercised to prevent erroneous assumptions or interpretations on unsupported or unconfirmed geophysical data.

(2) Preliminary investigations are intended to provide the general information necessary to supplement the office studies and provide the basis needed to plan a comprehensive final investigative program. Data obtained

from the preliminary program should answer the general questions as to classification of materials including index properties, consistency or relative density, overburden thickness, and ground-water conditions.

b. Final.

(1) After the preliminary investigative program has disclosed the general characteristics of the subsurface materials, a more specific program must then be designed. Economic and time limitations often control the amount of effort expended on subsurface investigations, and although there will never be enough time or money to uncover all defects and their locations, the program must be adequate to define the essential character of the subsurface materials. The program results should enable the investigators to determine the nature of the overburden and the bedrock.

(2) As with any dam, the final number, spacing, and depth of borings for foundation exploration of a cellular cofferdam are determined by several factors, principal among which is the complexity of the geologic conditions. The holes should extend to top of rock if practicable, or at least to a depth where stresses from the structure are small. Again as a general rule, the borings should extend to a depth at least equal to the designed height of the cofferdam. In applying these general rules, care must be exercised to avoid formulating a plan of borings on a predetermined pattern to predetermined depths, possibly losing available information to be gained from the flexibility afforded by a knowledgeable use of the geology. Additional borings should be located, oriented, and drilled to depths to fully and carefully explore previously disclosed trouble areas, such as layers of weak compressible clay, fault zones or zones of highly dissolved rock, or irregular rock surfaces.

(3) The program should be detailed enough to adequately cover sources of common problems in cellular cofferdam construction. Typical obstacles such as boulders in the overburden may cause difficulty in driving the cell sheets and lead to interpretations of a false top of rock. The program should also fully cover foundation features which have resulted in past cellular cofferdam failures, i.e., foundation failures precipitated by faults, slip planes, and high uplift pressures.

(4) The final plan of investigation should include continuous undisturbed sampling of the overburden to provide the necessary samples for laboratory testing. The type, number, and depth of undisturbed sample borings should be determined after an evaluation of information derived from the disturbed sample borings. Bedrock cores should be taken to adequately define the top of rock as well as the presence or absence of discontinuities in the rock. Large diameter cores for testing may not be necessary if such testing has been performed for the main structure and if there is no change in the geology.

(5) The location, orientation, and depth of core borings should be adjusted to recover as much information as possible on the more probable problem defects in the particular rock. For example, the major problem in sandstone is generally the jointing, especially if subjected to folding, whereas the

major problem in limestone is generally associated with solution cavities. Regardless of the degree of care exercised in the core drilling operations, all core may not be recovered. Particular emphasis should be accorded this "lost core," and for design purposes, this loss should be attributed to soft or weak materials unless there is incontrovertible evidence to the contrary. The possibility of such potential sliding planes should always be considered regardless of rock type, because seemingly competent rock may contain weak clay seams and adversely oriented clay-filled joints along which sliding can take place. Borings for top of rock determination should go into the rock sufficiently to determine depth of discontinuities. This depth should be adjusted to fit conditions as determined by other studies, e.g., the depth should be increased if geologic interpretations from core borings and outcrops indicate an average depth of 25 feet of cavernous rock. In addition, if there is evidence of an abrupt change in the top of rock elevation, such as an erosional scarp or severe and widespread solution activity in the limestone, a number of roller rock bit borings should be drilled on close centers to better define the condition.

(6) A reliable estimate of water inflow as well as an accurate determination of the elevation and fluctuation of the ground-water table are primary concerns in the design and construction of any hydraulic structure. One method of obtaining information is the field pumping test which may be performed to determine the permeability of the foundation materials.

(7) The investigation plan should be flexible so that information may be evaluated as soon as possible and adjustments made as needed. The program should begin as soon as possible and should carry through the design stage until adequate information is available for preparation of contract plans and specifications. The program must be refined through analysis of the geologic details to provide specific and reliable information on the character of the overburden; the depth to and configuration of the top of rock; the depth and character of bedrock weathering; the structures or discontinuities, such as faults, shear zones, folds, joints, solution channels, bedding, and schistosity; the physical properties of the foundation materials; the elevation and fluctuation limits of the ground water; and potential foundation problems and their treatment, such as leakage and stability.

(8) The final investigations should supply the necessary information to complete the interpretation or "picture" of subsurface conditions, dispel any reasonable doubts or fears on the practicability of the design, and provide adequate information for reliable estimates on foundation-related bid items for the contract.

3-4. Presentation of Data.

a. Report. Following a complete and thorough evaluation of all geotechnical data, a report should be prepared for inclusion in the design memorandum. Scheduling on a project is usually such that design exploration and actual design are done concurrently. Consequently, the data should be discussed with the design engineers as the data are evaluated. In most cases,

the cellular cofferdam will be included in the feature design memorandum for the primary structure. In any case, the report should include a brief summary of the topography, of the regional and site geology including the seismic history, and of the subsurface investigations and tests that were performed. The summary of the site physiography and geology should emphasize those conditions of engineering significance, i.e., those most pertinent to the engineering structure, in this case, the cofferdam. Such conditions that should be covered are the character and thickness of the overburden with particular note of any potential trouble materials; the estimated top of rock; the type, stratigraphic sequence, and geologic structure of the rock; the nature and depth of rock weathering; and site ground-water conditions. The detailed account of the geotechnical investigations should include the number, type, and location of the explorations as well as an explanation for the particular explorations. A brief description of the various pieces of equipment used should also be provided. The account should contain a summary of the type of tests, both field and laboratory, that were performed and the results that were obtained. And finally, any search for sources of construction materials, whether specifically for the cofferdam or not, should be summarized. The report should include a detailed account of the data that were obtained, conclusions as to the subsurface conditions and their impact on the cellular cofferdam, and recommendations, particularly as to foundation treatment and construction materials. The preponderance of the information contained in this report, minus interpretations, should be presented to contractors for bidding purposes in accordance with the Unified Soil Classification System (item 89).

b. Drawings. Drawings are a necessary part of the report and should include a plan of exploration, boring logs, top of rock map, and geologic interpretations of subsurface conditions at the cofferdam site. The sections must provide the location of the borings; the character and thickness of the overburden with particular note of any potential trouble materials and an interpretation of their extent and configuration; the estimated top of rock line, both weathered and unweathered; the character of the weathered rock zone; overburden and bedrock classification; structural features such as faults, joints, and bedding planes; and ground-water conditions. The boring logs should show the designation and location, the surface elevation, and the overburden/bedrock contact, and should describe the material in terms of the Unified Soil Classification System. The boring logs should also show the depths of material change, blow counts in the overburden or areas of rapid drill penetration, defects, core loss, drill water increase or loss, water level data with dates obtained, pressure test data, the date hole was completed, percentage of core recovery, and size and type of hole. The results of any geophysical survey should be presented to support or supplement other exploratory data. The proposed cellular cofferdam location should be included on the drawings to more accurately depict the founding of the structure in relation to the subsurface conditions and to facilitate review.

3-5. Investigations During and Following Construction.

a. Construction and Postconstruction Data Acquisition. The subsurface investigations must continue throughout the construction and postconstruction

period. Information on foundation conditions should be obtained and recorded whenever and wherever possible during construction and operation of the cofferdam. This information should include volume and thicknesses of any deleterious material such as a weak compressible clay bed that might necessarily be excavated and the depth or elevation of the excavation, increased sheet pile resistance and the reason for the increase such as lenses or zones of cobbles or boulders, depth of sheet pile refusals, and water inflows as evidenced by the volume of pumping required to maintain a dry working area. This information should be continuously compared with data developed for design and for preparation of plans and specifications. The information obtained during and following construction of the cofferdam may prove invaluable in the event that problems with the performance of the structure develop, resulting in remedial action and/or a contract claim.

b. Construction Foundation Report. After completion of the cofferdam construction, an as-built foundation report on construction of the cofferdam must be prepared in compliance with ER 1110-1-1801. Although this report in most cases will be included with the foundation report for the entire project, its initiation and completion should not be delayed. The report must contain all data pertinent to the foundation, including but not limited to a comparison of the foundation conditions anticipated and those actually encountered; a complete description of any materials necessarily excavated and the methods utilized in the excavation; a description, evaluation, and tabulation of the sheet pile driving including method, type, date, and depth; a description of the methods used and any problems encountered in the foundation treatment and any deviations from the design treatment (including reasons for such change); a tabulation and evaluation of the water pumping required as well as a comparison with the anticipated inflow; a detailed discussion of any solutions to problems encountered; and the results and evaluation of, and recommendations based on the instrumentation.

Section II. Field and Laboratory Testing

3-6. Estimation of Engineering Properties. Field and laboratory testing are used to estimate the engineering properties needed for the rational design of both the foundation and the structure. The foundation design requires an estimate of both the strength and seepage qualities of the foundation, The engineering properties of the cell fill can usually be estimated with sufficient accuracy from laboratory index tests.

3-7. Field Testing. During the initial phase of exploration, field tests are generally made to obtain a rough estimate of the strength of the foundation. Later stages may require similar testing to refine or extend the subsurface profile, or more sophisticated testing may be required where better estimates are needed. Field or in situ testing of rock strength is usually expensive and difficult; consequently, most such testing is reserved for projects that are large and/or have complicated or difficult foundation problems. These various in situ rock tests are listed in Table 4-4 of EM 1110-1-1804. Preliminary estimates are commonly made for soils using the methods listed in Table 3-1. Two of these methods are summarized below.

Table 3-1

Methods of Preliminary Appraisal of Foundation Strengths

Method	Remarks
Penetration resistance from standard penetration test	In clays, test provides data helpful in a relative sense; i.e., in comparing different deposits. Generally not helpful where number of blows per foot, N , is low
	In sand, N-values less than about 15 indicate low relative densities
Natural water content of disturbed or general type samples	Useful when considered with soil classification and previous experience is available
Hand examination of disturbed samples	Useful where experienced personnel are available who are skilled in estimating soil shear strengths
Position of natural water contents relative to liquid limit (LL) and plastic limit (PL)	Useful where previous experience is available
	If natural water content is close to PL, foundation shear strength should be high
	Natural water contents near LL indicate sensitive soils with low shear strengths
Torvane or pocket penetrometer tests on intact portions of general samples	Easily performed and inexpensive, but results may be excessively low; useful for preliminary strength estimates
Vane shear	
Quasi-static cone penetration	See FHWA-TS-78-209, 1977 (item 26)

a. Vane Shear Tests. The vane shear test is an in situ test and is often valuable for soft clay foundations where considerable disturbance may occur during sampling. A disturbance, especially when using conventional sampling methods, usually reduces the undrained strength of the sampled soil to a value that often would result in an uneconomical design. Because this test is performed in situ, sample disturbance is minimized. The test usually overestimates the soil's undrained strength and must be reduced by an applicable correction factor. Bjerrum (item 9) recommended a correction that is a function of the clay's plasticity index and varies as shown in Figure 3-1. Appendix D of EM 1110-2-1907 describes this test in detail. The testing procedure should be followed closely because the results can be very sensitive to the testing details. Because of the uncertainty of the results from this test, an independent method of estimating the foundation shear strength should be included in any testing program. Often unconsolidated-undrained triaxial testing of good quality undisturbed samples is a good independent check. A bracket for estimating the foundation shear strength can sometimes be established by taking corrected field vane tests as an upper bound and good quality undisturbed samples tested in undrained compression as a lower bound for shear strength.

b. Standard Penetration Test. This test is one of the most widely used methods for soil exploration in the United States. It is a means of measuring

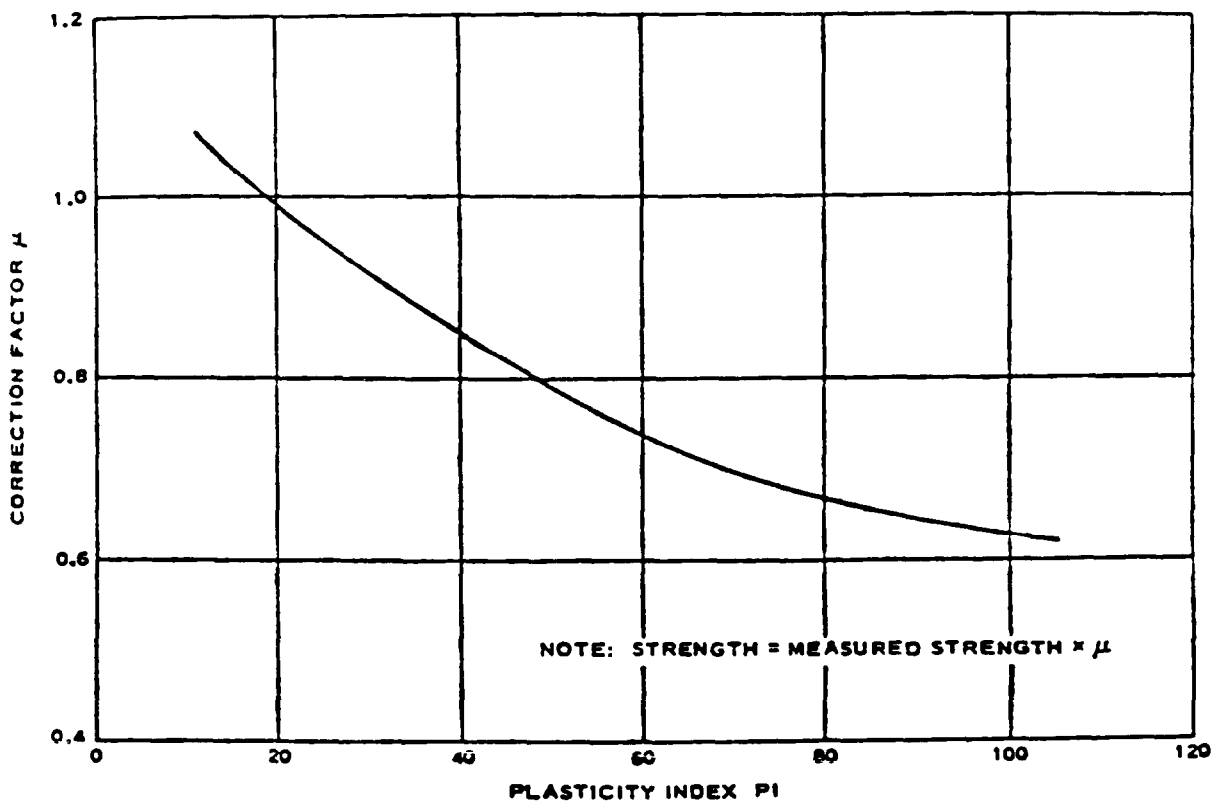

Figure 3-1. Vane shear correction chart (item 11)

the penetration resistance to the split-spoon sampler as well as obtaining a disturbed-type sample. Correlations between the penetration resistance and the consistency of cohesive soils and the relative density of granular soils have been published and are often used to estimate soil strength. These correlations are very rough and, except for the smallest of structures, should be liberally supplemented with other, better quality, strength testing. The designer should be aware of the severe limitations of using the results of this test. For example, the values obtained when testing soft clays, coarse gravels, or micaceous soils are often of little or no value. Procedures for performing the standard penetration test are given in EM 1110-2-1907.

3-8. Field Seepage Testing. The permeability of pervious foundation soils can usually be estimated with sufficient accuracy by using existing correlations with the foundation's grain-size distribution, Figure 3-2. Field pumping tests are a much more accurate means for determining the permeability of the foundation soils, especially for stratified deposits. These tests, however, are expensive and are usually justified only for unusual site

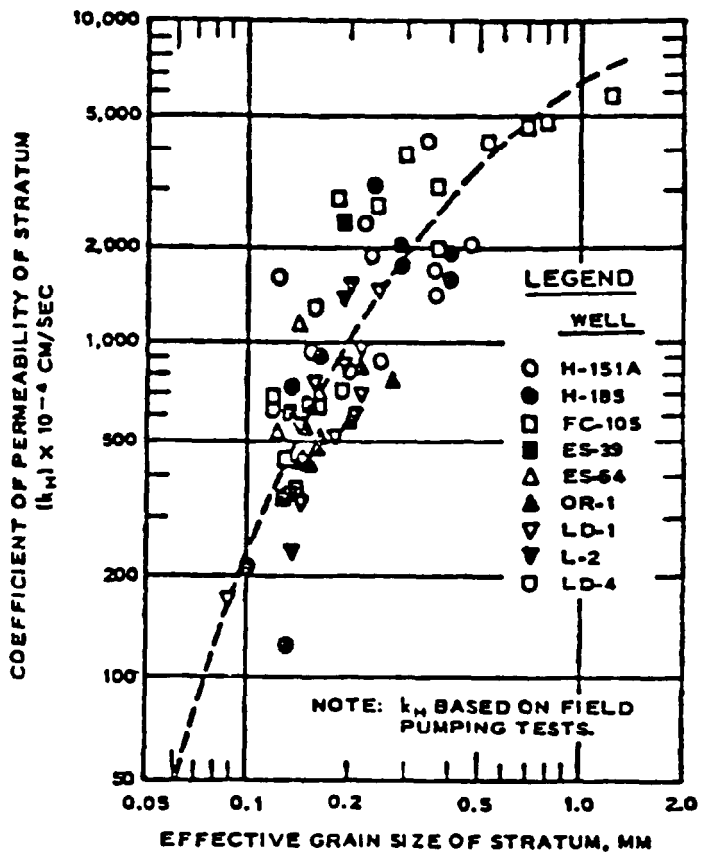

Figure 3-2. Effective grain size of stratum versus in situ coefficient of permeability. Based on data collected in the Mississippi River Valley and Arkansas River Valley (item 1)

conditions. Clay foundations are usually considered impervious for estimates of seepage quantities. However, the effects of discontinuities and thin beds of granular materials are important and should not be neglected. A number of field tests are available to measure rock mass permeability including pumping tests, tracer tests, and injection or pressure tests. The most frequently used field test is the borehole pressure test which is relatively simple and inexpensive. Among the three types of pressure tests, water, pressure drop, and air, water is the most common because it is simple to perform, is not overly time-consuming, and can be performed above or below the ground-water table. A brief description of this test is included in Paragraph 4-22 of EM 1110-1-1804. A suggested method for borehole water pressure testing is presented in the Rock Testing Handbook 381-80 (item 91).

3-9. Laboratory Testing.

a. A laboratory testing program should be designed to supplement and refine the information obtained from the subsurface investigation and field tests. The amount and type of testing depends on the type and variability of the foundation and borrow areas, the size of the structure, the consequences of failure, and the experience of the designer with local conditions. A discussion of further laboratory investigations is presented in Chapter 5 of EM 1110-1-1804.

b. Descriptions of current laboratory testing procedures are detailed in EM 1110-2-1906 and in the Rock Testing Handbook 381-80.

c. The laboratory testing program is typically performed in phases that follow the subsurface investigation program. Initially, index tests are performed on samples obtained from the exploration program. These results are then used as a basis for the selection of samples and the design of a laboratory testing program.

3-10. Index Tests.

a. Index tests are used to classify soil in accordance with the Unified Soil Classification System (Table 3-2), to develop accurate foundation soil profiles, and as an aid in correlating the results of engineering property tests to areas of similar soil conditions. Both disturbed and undisturbed soil samples should be subjected to index-type tests. Index tests should be initiated, if possible, during the course of field investigations. All samples furnished to the laboratory should be visually classified and natural water content determinations made; however, no water content tests need be run on clean sands or gravels. Mechanical analyses (gradations) of a large number of samples are not usually required for identification purposes, Atterberg limits tests should be performed on representative fine-grained samples selected after evaluation of the boring profile. For selected borings, Atterberg limits should be determined at frequent intervals on the same samples for which natural water contents are determined.

Table 3-2

Unified Soil Classification

UNIFIED SOIL CLASSIFICATION
(Including Identification and Description)

Major Divisions 1	Major Divisions 2		Group Symbols 3	Typical Names 4	Field Identification Procedures (Excluding particles larger than 3 in. and basing fractions on estimated weights) 5	Information Required for Describing Soils 6	Laboratory Classification Criteria 7
Coarse-grained Soils. More than half of material is larger than No. 200 sieve size.	Gravels. More than half of coarse fraction is larger than No. 4 sieve size. (For visual classification, the 1/4-in. size may be used as equivalent to the No. 4 sieve size)	Clean Gravels (Little or no fines)	GW	Well-graded gravels, gravel-sand mixtures, little or no fines.	Wide range in grain sizes and substantial amounts of all intermediate particle sizes.	For undisturbed soils add information on stratification, degree of compactness, cementation, moisture conditions, and drainage characteristics.	Determine percentages of gravel and sand from grain-size curve. Depending on percentage of fines (fraction smaller than No. 200 sieve size) coarse-grained soils are classified as follows: Less than 5% = GW, GP, SW, SP. More than 12% = GM, GC, SM, SC. 5% to 12% = Borderline cases requiring use of dual symbols. $C_u = \frac{D_{60}}{D_{10}}$ Greater than 4; $C_c = \frac{(D_{30})^2}{D_{10} \times D_{60}}$ Between 1 and 3
			GP	Poorly graded gravels or gravel-sand mixtures, little or no fines.	Predominantly one size or a range of sizes with some intermediate sizes missing.		Not meeting all gradation requirements for GW
		Gravels with Fines (Appreciable amount of fines)	GM	Silty gravels, gravel-sand-silt mixture.	Nonplastic fines or fines with low plasticity (for identification procedures see ML below).	Give typical name; indicate approximate percentages of sand and gravel, maximum size; angularity, surface condition, and hardness of the coarse grains; local or geologic name and other pertinent descriptive information; and symbol in parentheses.	Atterberg limits below "A" line or PI less than 4
			GC	Clayey gravels, gravel-sand-clay mixtures.	Plastic fines (for identification procedures see CL below).		Atterberg limits above "A" line with PI greater than 7
	Sands. More than half of coarse fraction is smaller than No. 4 sieve size.	Clean Sands (Little or no fines)	SW	Well-graded sands, gravelly sands, little or no fines.	Wide range in grain size and substantial amounts of all intermediate particle sizes.		Above "A" line with PI between 4 and 7 are borderline cases requiring use of dual symbols.
			SP	Poorly graded sands or gravelly sands, little or no fines.	Predominantly one size or a range of sizes with some intermediate sizes missing.		$C_u = \frac{D_{60}}{D_{10}}$ Greater than 6; $C_c = \frac{(D_{30})^2}{D_{10} \times D_{60}}$ Between 1 and 3
		Sands with Fines (Appreciable amount of fines)	SM	Silty sands, sand-silt mixtures.	Nonplastic fines or fines with low plasticity (for identification procedures see ML below).	Example: Silty sand, gravelly; about 20% hard, angular gravel particles 1/2-in. maximum size; rounded and subangular sand grains, coarse to fine; about 15% nonplastic fines with low dry strength; well compacted and moist in place; alluvial sand; (SM).	Not meeting all gradation requirements for SW
			SC	Clayey sands, sand-clay mixtures.	Plastic fines (for identification procedures see CL below).		Atterberg limits below "A" line or PI less than 4
							Atterberg limits above "A" line with PI greater than 7
							Above "A" line with PI between 4 and 7 are borderline cases requiring use of dual symbols.

Fine-grained Soils. More than half of material is smaller than No. 200 sieve size. The No. 200 sieve size is about the smallest particle visible to the naked eye.		Group Symbols 3	Typical Names 4	Identification Procedures on Fraction Smaller than No. 40 Sieve Size: Dry Strength (Crushing characteristics) 5	Dilatancy (Reaction to shaking) 5	Toughness (Consistency near PL) 5	Information Required for Describing Soils 6
Silts and Clays. Liquid limit is less than 50		ML	Inorganic silts and very fine sands, rock flour, silty or clayey fine sands or clayey silts with slight plasticity.	None to slight	Quick to slow	None	For undisturbed soils add information on structure, stratification, consistency in undisturbed and remolded states, moisture and drainage conditions.
		CL	Inorganic clays of low to medium plasticity, gravelly clays, sandy clays, silty clays, lean clays.	Medium to high	None to very slow	Medium	
		OL	Organic silts and organic silty clays of low plasticity.	Slight to medium	Slow	Slight	Give typical name; indicate degree and character of plasticity; amount and maximum size of coarse grains; color in wet condition; odor, if any; local or geologic name and other pertinent descriptive information; and symbol in parentheses.
Silts and Clays. Liquid limit is greater than 50		MH	Inorganic silts, micaceous or diatomaceous fine sandy or silty soils, elastic silts.	Slight to medium	Slow to none	Slight to medium	
		CH	Inorganic clays of high plasticity, fat clays.	High to very high	None	High	
		OH	Organic clays of medium to high plasticity, organic silts.	Medium to high	None to very slow	Slight to medium	Example: Clayey silt, brown; slightly plastic; small percentage of fine sand; numerous vertical root holes; firm and dry in place; loess; (ML).
Highly Organic Soils		Pt	Peat and other highly organic soils.	Readily identified by color, odor, spongy feel and frequently by fibrous texture.			

Use grain-size curve in identifying the fractions as given under field identification.

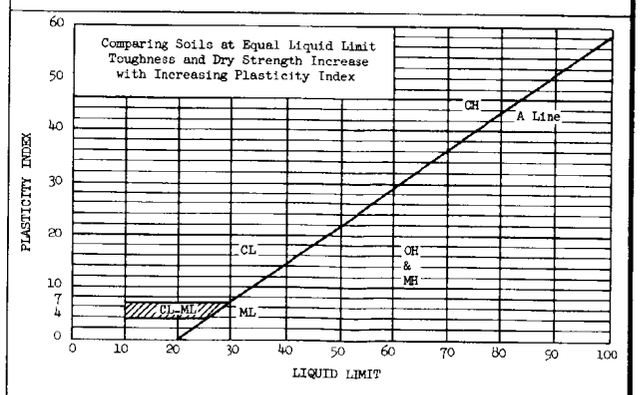

PLASTICITY CHART

For laboratory classification of fine-grained soils

(1) Boundary classifications: Soils possessing characteristics of two groups are designated by combinations of group symbols. For example GW-GC, well-graded gravel-sand mixture with clay binder. (2) All sieve sizes on this chart are U. S. standard.

FIELD IDENTIFICATION PROCEDURES FOR FINE-GRAINED SOILS OR FRACTIONS

These procedures are to be performed on the minus No. 40 sieve size particles, approximately 1/64 in. For field classification purposes, screening is not intended, simply remove by hand the coarse particles that interfere with the tests.

Dilatancy (reaction to shaking)

After removing particles larger than No. 40 sieve size, prepare a pat of moist soil with a volume of about one-half cubic inch. Add enough water if necessary to make the soil soft but not sticky.

Place the pat in the open palm of one hand and shake horizontally, striking vigorously against the other hand several times. A positive reaction consists of the appearance of water on the surface of the pat which changes to a livery consistency and becomes glossy. When the sample is squeezed between the fingers, the water and gloss disappear from the surface, the pat stiffens, and finally it cracks or crumbles. The rapidity of appearance of water during shaking and of its disappearance during squeezing assist in identifying the character of the fines in a soil.

Very fine clean sands give the quickest and most distinct reaction whereas a plastic clay has no reaction. Inorganic silts, such as a typical rock flour, show a moderately quick reaction.

Dry Strength (crushing characteristics)

After removing particles larger than No. 40 sieve size, mold a pat of soil to the consistency of putty, adding water if necessary. Allow the pat to dry completely by oven, sun, or air-drying, and then test its strength by breaking and crumbling between the fingers. This strength is a measure of the character and quantity of the colloidal fraction contained in the soil. The dry strength increases with increasing plasticity.

High dry strength is characteristic for clays of the CH group. A typical inorganic silt possesses only very slight dry strength. Silty fine sands and silts have about the same slight dry strength, but can be distinguished by the feel when powdering the dried specimen. Fine sand feels gritty whereas a typical silt has the smooth feel of flour.

Toughness (consistency near plastic limit)

After particles larger than the No. 40 sieve size are removed, a specimen of soil about one-half inch cube in size, is molded to the consistency of putty. If too dry, water must be added and if sticky, the specimen should be spread out in a thin layer and allowed to lose some moisture by evaporation. Then the specimen is rolled out by hand on a smooth surface or between the palms into a thread about one-eighth inch in diameter. The thread is then folded and rerolled repeatedly. During this manipulation the moisture content is gradually reduced and the specimen stiffens, finally loses its plasticity, and crumbles when the plastic limit is reached.

After the thread crumbles, the pieces should be lumped together and a slight kneading action continued until the lump crumbles.

The tougher the thread near the plastic limit and the stiffer the lump when it finally crumbles, the more potent is the colloidal clay fraction in the soil. Weakness of the thread at the plastic limit and quick loss of coherence of the lump below the plastic limit indicate either inorganic clay of low plasticity, or materials such as kaolin-type clays and organic clays which occur below the A-line.

Highly organic clays have a very weak and spongy feel at the plastic limit.

021260A

b. Normally, Atterberg limits, determinations, and mechanical analyses are performed on a sufficient number of representative samples from preliminary borings to establish the general variation of these properties within the foundation, borrow, or existing fill soils. A typical boring log is shown in Figure 3-3.

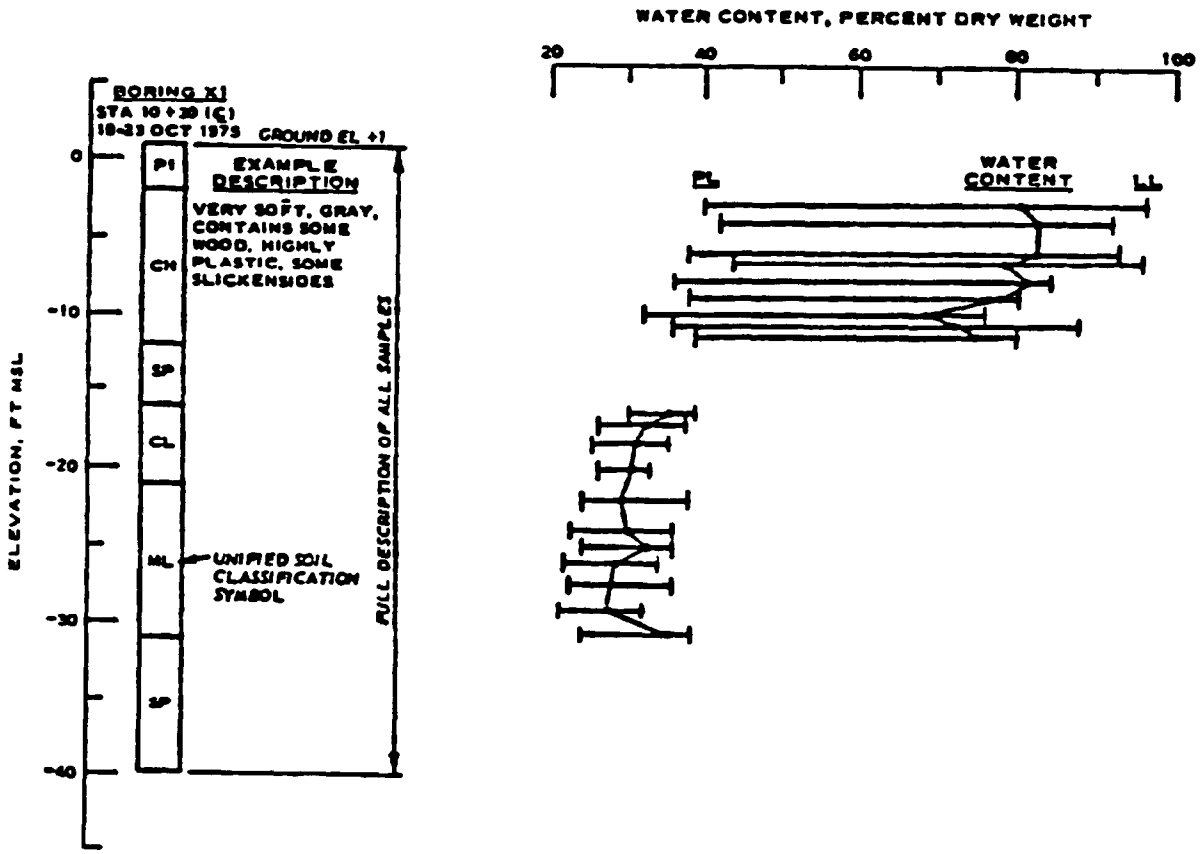

Figure 3-3. Typical boring log with results of Atterberg limits and water content tests

c. All rock cores should be logged in the field by a geologist, preferably as the cores come from the hole. A number of laboratory classification and index tests for rock are listed in Table 5-4 of EM 1110-1-1804. These tests include water content, unit weight, porosity, and unconfined compression, all of which should be performed on representative samples.

3-11. Engineering Property Tests. A good estimate of the strength and seepage characteristics of the foundation is necessary for an adequate foundation design. The estimate of the foundation strength is usually the most critical design parameter. Seepage characteristics are usually estimated based on the gradation of the foundation soils and an evaluation of geologic properties, especially discontinuities. The properties of the cell fill are usually estimated based on gradation analyses and the anticipated method of placement of the fill.

3-12. Permeability of Soils.

a. Fine-Grained Soils. There is generally no need for laboratory permeability tests on fine-grained fill material or clay foundation deposits. In underseepage analyses, simplifying assumptions must be made relative to thickness and soil types. Furthermore, stratification, root channels, and other discontinuities in fine-grained materials can significantly affect seepage conditions.

b. Coarse-Grained Soils. The problem of foundation underseepage requires reasonable estimates of permeability of coarse-grained pervious deposits. However, because of the difficulty and expense in obtaining undisturbed samples of sand and gravel, laboratory permeability tests are rarely performed on foundation deposits. Instead, correlations developed between grain size and coefficient of permeability, such as that shown in Figure 3-2 are generally utilized. This correlation explains the need for performing gradation tests on pervious materials where underseepage problems are indicated.

3-13. Permeability of Rock. The determination of rock mass permeability quite often depends on secondary porosity produced through fracturing and solution rather than on primary porosity of the rock. Consequently, geologic interpretations and evaluations are extremely important in determining the discontinuities that serve as ready passageways for ground-water flows.

3-14. Shear Strength--General.

a. There are three primary types of shear strength tests for soils, each representing a certain loading condition. The Q-test represents unconsolidated-undrained conditions; the R-test, consolidated-undrained conditions; and the S-test, consolidated-drained conditions. The unconsolidated-undrained strength generally governs the design of foundations on fine-grained deposits. R-tests are generally not needed for most cellular structure designs. S-tests are used where long-term stability of a fine-grained foundation is to be checked or if the soil to be tested is a granular material.

b. Q- and R-tests are performed in triaxial testing devices while S-tests are performed using direct shear and triaxial testing devices. The unconfined compression (UC) test is a special case of the Q-test in that it also represents unconsolidated-undrained conditions but is run with no confining pressure. Also, rough estimates of unconsolidated-undrained strength of clay can be obtained through the use of simple hand devices such as the pocket penetrometer or Torvane. However, these devices should be correlated with the results of Q- and UC-tests.

c. The discussion in paragraphs 3-15 and 3-16 relates the applicability of each test to the different general soil types. The applicability of the results of the different shear tests to field loading conditions and the different cases of stability are discussed in Chapter 4.

d. There are two basic types of shear strength tests utilized to obtain values of cohesion and angles of internal friction to determine strength parameters of the foundation rock: the triaxial and the direct shear. The data to determine rock strength in an undrained state under three-dimensional loading are obtained from the triaxial test. This test is performed on intact cylindrical rock samples not less than NX core size, i.e., approximately 2-1/8 inches in diameter. The direct shear test, an undrained type, is performed on core samples ranging from 2 to 6 inches in diameter. In this test, the samples are oriented such that the normal load is applied perpendicular to the feature being tested. These normal loads should be comparable to those loads anticipated in the field. Details of these tests are presented in the Rock Testing Handbook. For moisture-sensitive rocks such as indurated clays and compaction shales, soil property test procedures described in EM 1110-2-1906 should be used.

3-15. Shear Strength--Sand. Since consolidation of sand occurs simultaneously with loading, the appropriate shear strength of sands for use in design is the consolidated-drained, S-strength. However, the shear strength of sand in the foundation or cell, regardless of the method of placement, is not normally a critical or controlling factor in design. Therefore, excessive laboratory testing to determine the shear strength of sand is usually not warranted. Satisfactory approximations for most sand can also be made from correlations with standard penetration resistances and relative densities. Such correlations can be found in most standard engineering texts on soil mechanics (Figure 3-4). Seepage forces, discussed in detail in Chapter 4, can reduce the shear resistance, especially at the toe of the structure, to undesirable levels.

3-16. Shear Strength--Clay and Silt.

a. The undrained shear strength parameters should be determined for all fine-grained materials in the foundation. In areas of soft, fine-grained foundations, it is imperative that an adequate shear testing program be accomplished to establish the variation in unconsolidated-undrained shear strength with depth within the foundation (usually expressed as the ratio of undrained shear strength s_u to effective vertical stress σ'_v) as shown in Figure 3-5. A sufficient number of Q-tests, supplemented by UC tests, where appropriate, should be performed throughout the critical foundation stratum or strata. Data obtained from any field vane shear strength tests may also be helpful in establishing this variation.

b. R-tests can be helpful in estimating the variation in undrained shear strength with depth, and in determining the increase in undrained shear strength with increased effective consolidation stress. This may be necessary in estimating the gain in shear strength with time after loading.

c. The results of S-tests are used in evaluating the long-term stability of the foundation and in judging the stability of structures where pore pressure data, such as those obtained from piezometers, are available.

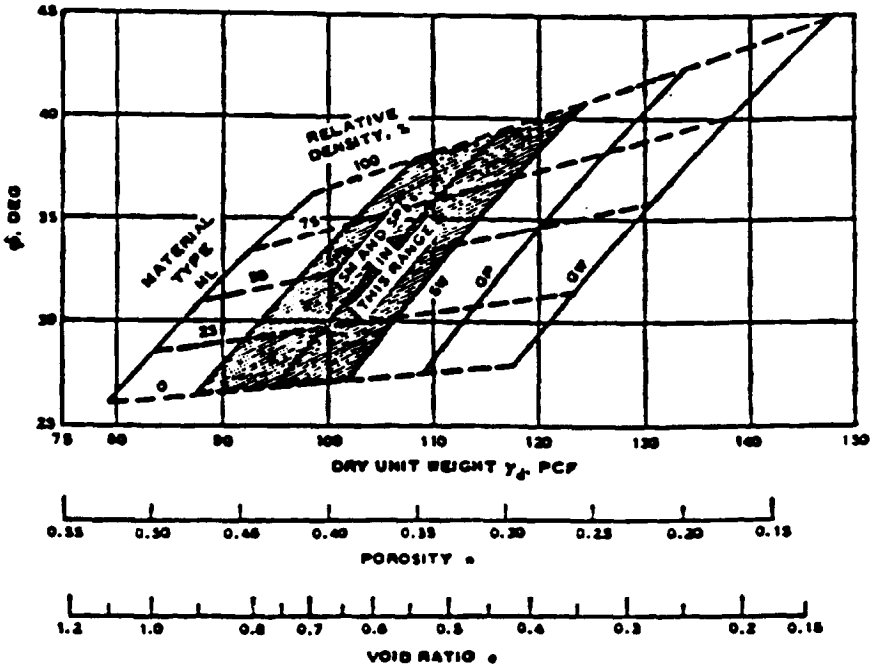

Figure 3-4. Angle of internal friction versus density for coarse-grained soils (item 50)

3-17. Procedures. Procedures for the performance of previously discussed shear tests are outlined in EM 1110-2-1906 and in Rock Testing Handbook 381-80 (item 91). In performing these tests, one should be sure that field conditions are duplicated as closely as possible. Confining pressures for triaxial tests and normal loads for direct shear tests should be chosen such that the anticipated field pressures are bracketed by the laboratory pressures based on depth and location of sample and anticipated field loadings. All samples should be sheared at a rate of loading slow enough that there will be no significant time-rate effect. The specimen size should also be chosen such that scale effects are minimized. Standard size of samples for triaxial testing of soils is 1.4 inches in diameter by 3 inches in height. However, if the sample is fissured or contains an appropriate amount of large particles such as shells, gravel, etc., then a larger size sample (2.8 inches in diameter by 6 inches in height) can be utilized in order to obtain valid results. Guidance on minimizing the effects of rate of loading, size, etc., is also contained in EM 1110-2-1906.

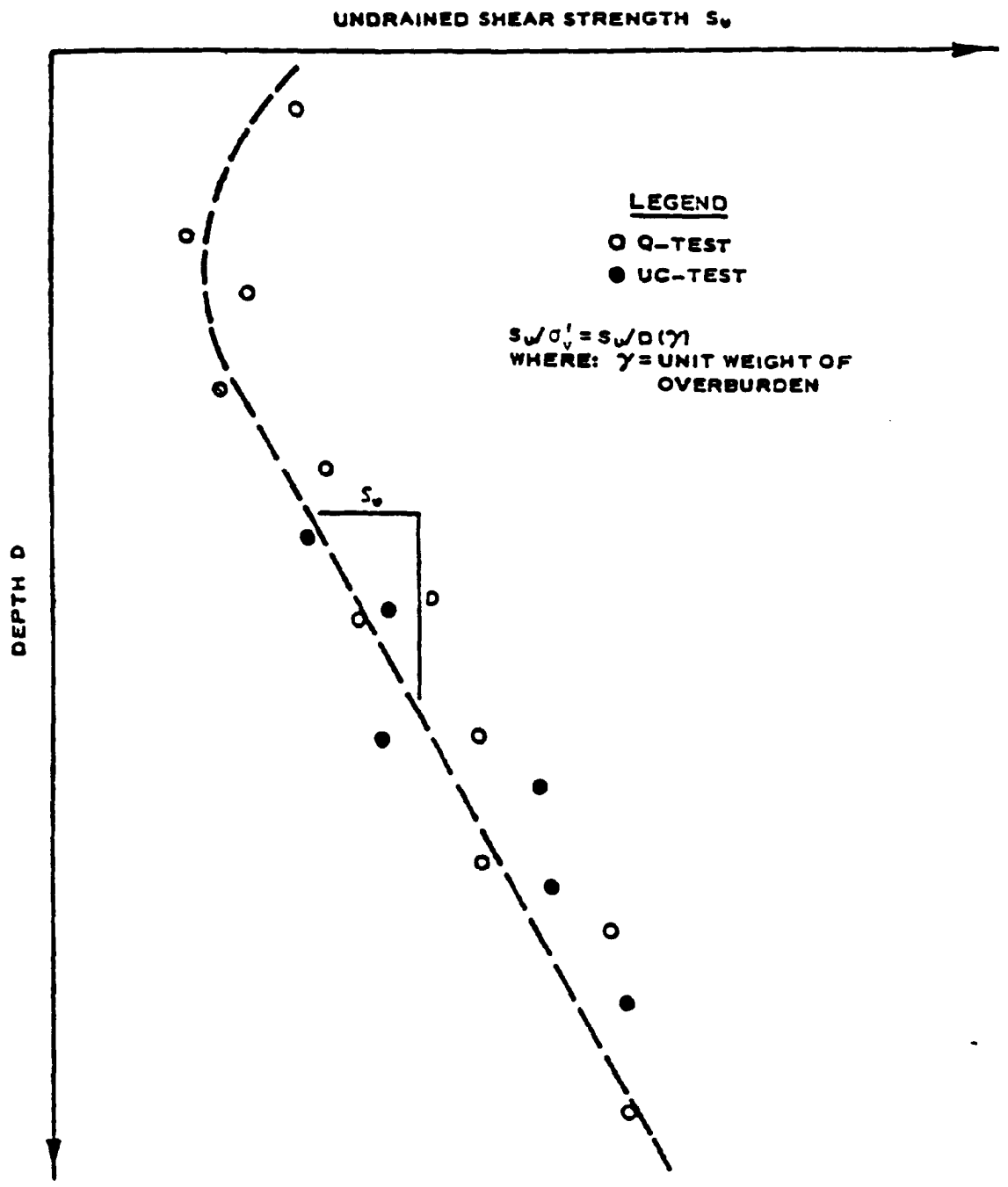

Figure 3-5. Typical plot showing variation of unconsolidated-undrained shear strength with depth

Section III. Foundation Treatment

3-18. Problem Foundations and Treatment.

a. Foundation treatment is sometimes considered for foundations with insufficient bearing capacity or problem seepage conditions. Problem seepage conditions can be the result of excessive seepage quantities or high seepage forces.

b. The following foundation treatment methods can be used to improve a deficient foundation.

(1) Removal of objectionable material. Removal may be before or after the piles are driven to form the cell.

(2) In situ compaction. Several methods are available and include vibroflotation, compaction piles, surcharge loads, and dynamic surface loads.

(3) Deep penetration of sheet piling. For design purposes, a trial penetration of two thirds of the cell height is usually considered when the cell is sited on a pervious foundation. An adjustment of this length should be based on a careful analysis of the seepage forces at the toe of the structure.

(4) Berms and blankets. Impervious blankets may be located on the outside of the cells to reduce seepage quantities and pressures. Interior berms reduce the likelihood of boiling at the toe of the structure.

(5) Consolidation. The strength of foundation material, especially fine-grained material, may be increased by consolidation. Surface preloading of the foundation and the use of sand drains are two of the methods used to accelerate consolidation of the foundation.

3-19. Grouting.

a. Correctional Methods. As for all such structures, foundation treatment should be carefully considered for cellular cofferdams. In many cases, removal of the unfavorable foundation material may be impracticable, if not impossible, and other methods of treatment must be selected. Grouting is one such method which should be considered, especially in instances where the piling of a cellular cofferdam will be driven to rock. During the evaluation of the data developed during the subsurface investigations, special note should be made of any unfavorable foundation condition that would justify at least some consideration of grouting. Such unfavorable foundation conditions might be noted as a result of evidences of solution activity such as soluble rock or drill rods dropping during drilling, open joints or bedding planes, joints or bedding planes filled with easily erodible material, faults, loss of drill fluid circulation, or unusual ground-water conditions, Generally, the problems related to such unfavorable foundation conditions can be grouped into

two categories: problems related to the strength of the foundation material and problems related to the permeability of the foundation material.

b. Problems Related to Strength. Among the problems related to strength that should be anticipated are: insufficient bearing capacity, insufficient resistance to sliding failure, and general structural weaknesses due to underground caverns or solution channels, or due to voids that develop during or following construction. Problem 3 is closely related to Problems 1 and 2 and should be considered jointly. In developing parameters for allowable bearing capacity, deficiencies noted in Problem 3 must be carefully considered. All too often, rock strength parameters are used in stability analyses that are based on rock sample strengths rather than mass rock strengths. The various discontinuities that reduce the foundation rock strengths may result in consequential reductions in the ultimate bearing capacity. As mentioned above, the bedrock may contain bedding plane cavities and solution channels that can extend to considerable depth (low crossbed shear strength). In recognizing the presence of such discontinuities, the possibility must also be recognized that an unfavorable combination of these discontinuities could exist under the cellular cofferdam, thus adversely affecting the sliding stability of the structure. The presence of these weak planes must be carefully considered when doing a sliding stability analysis.

c. Problems Related to Permeability. Among the problems related to permeability that should be anticipated are: reduction in the strength of the foundation materials due to high seepage forces, high uplift forces at the base of the structure, and inability to economically maintain the coffered area in an unwatered state. In many cases, the piling of a cellular cofferdam will be driven to rock. The presumption should be that some seepage will occur not only at the piling/bedrock contact, but also through openings in the bedrock. This seepage may result in piping of materials through the bedrock openings below the cofferdam, greatly reducing the strength of the foundation. These openings along bedding planes can also result in high uplift pressures. Quite often, the vertical permeability of the rock above the open bedding plane is only a small fraction of the permeability along the plane. If such a situation exists, it is possible that the high uplift pressures will jack the foundation. The size and continuity of solution channels acting as water passageways may have a serious economic impact on the dewatering of the work area within the cofferdam. Unfortunately, there is no way to accurately estimate the dewatering problems and costs that might result from such solution channels in the foundation.

d. Selection of Treatment. Treatment of the cofferdam foundation by grouting may be used to lessen, if not eliminate, defects in the foundation, resulting in a strengthened foundation with reduced seepage; see EM 1110-2-3506. Grouting should be selected as a method of foundation treatment only after a careful and thorough evaluation of all pertinent factors. Primary factors that must be necessarily considered before selection of grouting as the method of treatment are the engineering design requirements, the subsurface conditions, and the economic aspects. Although cost is just one factor to consider, in many circumstances, cost may be the controlling factor. The

cost of grouting must be weighed against such other costs as that of pumping, delays, claims, and/or failure. It may be that there is no benefit in reducing minor leakage by costly grouting.

(1) General. Information obtained and evaluated during the subsurface investigations for design of the structure should be adequate to plan the grouting program. If the grouting program is properly designed and conducted, it becomes an integral part of the ongoing subsurface investigations. A comprehensive program must necessarily take into account the type of structure, the purpose of the structure, and the intent of the grout program. As an example, foundation grouting for a cellular cofferdam is not intended to be permanent nor 100 percent effective. The program should be designed to provide the desired results as economically as possible. The program should be flexible enough to be revised during construction and performed only where there is a known need.

(2) To Strengthen. Grouting has been used on occasion to strengthen the foundation by area or consolidation grouting under the cells to increase the load-bearing capacity of the rock. This may be a viable option if the grouting is intended to increase the already acceptable factor of safety. However, if it appears that the factor of safety falls appreciably below the allowable factor of safety, total reliance should not be placed on grouting. The effectiveness of such grouting is impossible to predict or to evaluate. Certainly complete grouting is impossible because of the irregularity of the openings as well as the amount and character of any filling material.

(3) To Reduce Seepage. The principal purpose of grouting for cellular cofferdams has been in conjunction with seepage control and drainage. Curtain grouting is one method used to reduce uplift pressures and leakage under the cofferdam and thus reduce total dewatering costs. Although a single line curtain will suffice in most cases, the rock conditions may be such that it will be necessary to install a multiline curtain or a curtain with multiline segments. The exact location of the grout curtain will be influenced by a number of factors including the type of structure, the foundation conditions peculiar to the site, and the time the curtain is installed. For most cellular cofferdams, the grout curtain is located on or near the axis of the structure. However, if the curtain is not installed until the cofferdam has been constructed, it may be impracticable to drill holes through the cell fill. In this case the grout line should be moved off and just outside the cells. When installing the grout curtain, the flow of grout must be carefully controlled to prevent the grout from flowing too far, resulting in grout waste. To prevent such waste, it may be necessary to limit the quantity of grout injected, or to add a "stopper" line grouted at low pressure. The orientation and inclination of the holes should be adjusted to intercept the principal water passageways. Occasionally, however, conditions may render this impracticable and it may be that vertical holes on closer centers are more feasible.

(4) Development of Program. Following an evaluation of the foundation conditions and the selection of grouting as a method of foundation treatment, the evaluations, conclusions, and recommendations should be included in the

report of the subsurface investigations. Using data developed from the investigations, the pertinent reference manuals, and especially past experience, plans and specifications should be prepared for the grouting program. After having reviewed all available and pertinent data and having decided on the particular grouting program to be implemented, a number of basic factors must be decided: the area selected for grouting, the selection of the grout, the selection of the type of grouting, and the need for special instructions, provisions, or restrictions.

(a) Selection of Location. The area indicated for grouting should be a zone large enough to include any anticipated treatment. This is especially important in installing a grout curtain for a cellular cofferdam. This should be coincidental with provisions to provide for grouting anytime within the contract period without additional mobilization and demobilization costs to the Government. The drawings rightfully should show a grout curtain to be installed beneath the cofferdam along an approximate alignment and to definite limits. However, because of the numerous unknowns inherent in a grouting program, the plans and specifications should provide that the area of grouting extend some distance beyond the limits shown.

(b) Selection of Grout. The selection of the grout should be made only after a careful evaluation of the foundation conditions or materials being tested. The type of grout used in reducing or stopping high velocity flows would be different from that used for slow seeps, or the grout used to fill large cavities might be different from that used to fill small voids. A factor to be considered in sealing high velocity flow would be the time of set; the large quantities and costs would necessarily be considered in filling large cavities; while in filling small voids, the size of the void and the particle size of the grout are necessary considerations.

(c) Selection of Type of Grouting. Grouting may be done before, during, and/or after installation of the cofferdam or other construction activities in any given area. In the installation of a grout curtain, all or portions of the curtain may be constructed from the original ground surface and/or from floating plant in the river. If done from floating plant, in general, stop-grouting methods should be used because it is not practical to stage drill and grout from floating plant. Drilling and grouting from floating plant by the stop-grouting method should be considerably less costly than stage grouting, the holes being drilled and grouted to the bottom of the curtain in one setup.

(d) Special Instructions. In drilling from floating plant, it should be expressly understood that the depth of water penetrated will not be credited to the drilling footage for payment. If drilling and grouting are performed from the cofferdam, only drilling that is required below the original ground surface should be paid for. To effectively grout water-bearing openings associated with cavernous rock, the following general procedure should be followed: the grout holes should be drilled through the overburden and the casing should be seated a minimum of 1 foot in rock; the hole should be drilled at least 5 feet into rock, if the top of rock is lower than

anticipated; if stop-grouting methods are used, grouting of the rock should be performed through a packer set just below the bottom of the casing; should a special feature be encountered in the hole, the packer setting may be varied to isolate and treat this feature. Grouting of the overburden, if necessary, can then be done immediately following the rock grouting. The specifications should provide that if, as the work progresses, supplemental grouting is required at any area within specified limits at any time, such additional grouting will be at the established contract unit prices for the items of work involved. Although pressure testing should be provided for in the specifications, the condition of the foundation may be such that all grout holes should be grouted, in which case, pressure testing would not be necessary. If at all possible, the initial dewatering of the cofferdam should be performed at the lowest possible river stage or other measures should be taken to ensure a stable cofferdam capable of being unwatered until the foundation and the adequacy of the foundation treatment can be checked.

Section IV. Sources and Properties of Cell Fill

3-20. Borrow Area. Borrow-related problems occur frequently in earth-work-related construction, and sometimes result in costly design changes and contract modifications. Special diligence during the exploration and characterization of borrow fill will be beneficial during both the design and construction of the project.

3-21. Location. Borrow areas are generally located as close to the project site as possible to reduce hauling costs. The final selection of the borrow site, however, is governed by several additional considerations.

a. Cell Fill Properties. When the most desirable cell fill is not locally available, the cost of processing or designing the structure around marginal cell fill should be compared with the increase in cost due to longer haul distances.

b. Land Use. Although cell fill is often dredged from river channels, it is sometimes desirable to locate the borrow areas outside of the river. When this occurs, special consideration and planning should be initiated to provide proper reclamation of the area.

c. Environmental Aspects. Environmental considerations may restrict the use of certain potential borrow sites. An early review of the probable borrow sites for any detrimental environmental consequences should be considered. These consequences are sometimes mitigated by placing restrictions on the use of the borrow area and by special reclamation of the site. For example, wildlife habitats or recreational areas can sometimes be created at these sites with a small additional cost.

3-22. Selection of Cell Fill.

a. Almost all modern cellular sheet pile structures are designed based on the assumption that a free-draining granular fill will be available near

the construction site. Soils with less than about 5 percent of the particles by weight passing the No. 200 sieve and 15 percent passing the No. 100 sieve are usually termed free draining. Granular fills with many fines and even fine-grained fills have occasionally been used in the past; however, the poor performance of these fills usually favors use of better quality fill.

b. The performance of the sheet pile structure is directly related to the drainage characteristics of the cell fill. Free-draining fill will have a lower seepage line within the fill than less pervious material. The lower seepage line improves the cell performance by:

(1) Reducing the sheet pile interlock force. (Reducing this force is especially beneficial for high cells or where marginal material is used. However, a reduction in the interlock force may reduce the stiffness of the structure, with slightly larger structural movements.)

(2) Increasing the effective stress at the base of the cell, increasing lateral sliding resistance.

(3) Increasing the internal shear resistance.

Section V. Seepage Control

3-23. Seepage Through Cell.

a. The location of the free water surface in a cell is usually estimated using empirical relationships based on the type of cell fill. The recommendations in Figure 3-6 serve as a guide and starting point for estimating the location of the seepage line. These recommendations are conservative for most applications; however, each design should be evaluated for conditions that would tend to raise the seepage line. If both the quality of the cell fill and the assurance of proper inspection cannot be guaranteed during the design of the project, full saturation of the cell should be considered for design purposes. Some conditions that require evaluation are:

(1) Possible leakage from pipelines crossing the cells.

(2) Waves overtopping the outboard piles.

(3) Excessive leakage through the outboard piles.

(4) Poor drainage through the inboard piles.

(5) Lower permeability than expected of the cell fill.

(6) Hydraulic filling of cell fill.

b. The quantity of seepage through the cell is a function of both the tightness and integrity of the outboard piles and the type of cell fill, the chief barrier being the outboard piling. The tightness of the outboard piling

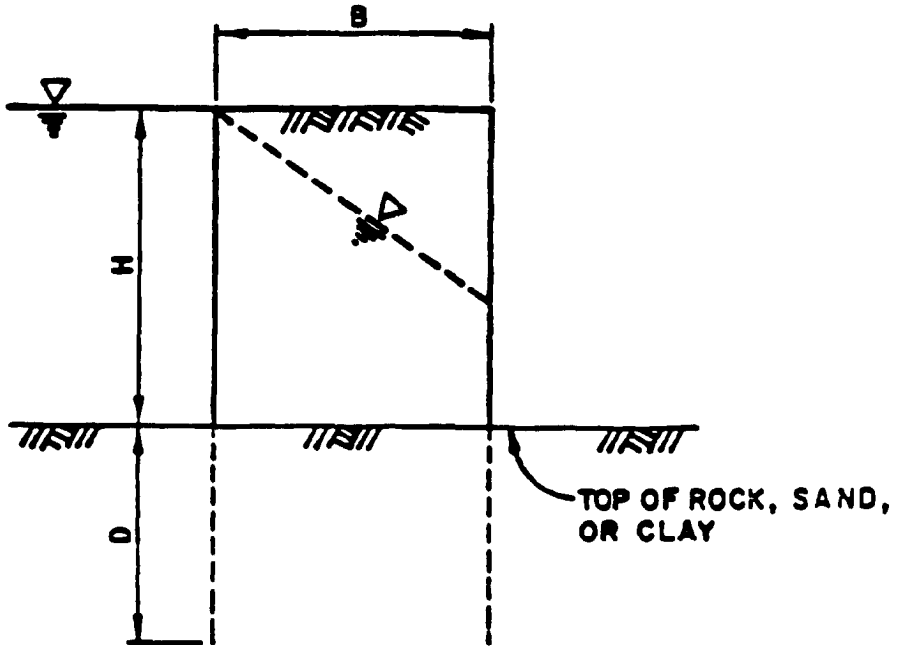

SLOPE OF FREE-WATER SURFACE IN CELLS DEPENDS ON PERMEABILITY OF CELL FILL. UNLESS SPECIAL DRAINAGE IS PROVIDED AND SLOPE IS CONTROLLED, ASSUME THE FOLLOWING:

- FREE-DRAINING COARSE-GRAINED FILL (GW, GP, SW, SP): SLOPE 1 VERTICAL TO 1 HORIZONTAL
- SILTY COARSE-GRAINED FILL (GM, GC, SM, SC): SLOPE 1 VERTICAL TO 2 HORIZONTAL
- FINE-GRAINED FILL: SLOPE 1 VERTICAL TO 3 HORIZONTAL

Figure 3-6. Estimate of free water location in fill

depends on the physical condition of the piling and the piling interlock force. An increase in seepage through the cell can generally be expected when:

(1) Second-hand piling is used. New piling in good condition should be considered for major structures. For other structures, used piling may be considered when either seepage conditions are slight or pose little threat to the safety to the structure.

(2) Rough driving is experienced during construction. The foundation exploration program should investigate conditions that lead to rough driving. Contract specifications, discussed in Chapter 7, should restrict hard driving.

(3) The interlock forces are small. The increase in seepage due to this condition is usually small, and is usually not considered.

3-24. Foundation Underseepage.

a. Foundation underseepage is generally not a problem for structures built on clay or good quality rock foundations. Problems almost always are confined to coarse-grained soil such as gravel and sand and sometimes silty materials. The most treacherous conditions occur where undetected pervious seams exist in the foundation.

b. Cofferdams on sand are often designed using a trial sheet pile penetration of two thirds of the height of the structure above-the dredgeline. A flow net is most often used to estimate the seepage forces. If the exit gradient at the toe of the structure is large, a loaded filter or a wide-base berm should be considered.

c. Depending on the site conditions, up to 50 percent of the passive resistance, even with 2/3H penetration, at the toe can be lost due to seepage forces. This loss increases the possibility of excessive penetration of the inboard piles. Methods and criteria for seepage control are discussed in Chapter 5.

Section VI. Seismic Considerations

3-25. Structure-Foundation Interaction. The susceptibility of cellular structures to damage due to earthquake loadings depends on the complex interaction of the structure and the foundation. Structural design for dynamic loading is reviewed in Chapter 4. In addition to these loads, a reduction in strength of the foundation, cell fill, or backfill behind a cellular bulkhead can also simultaneously occur during an earthquake. Structures founded on saturated, cohesionless materials or cohesive soils that contain lenses of saturated, cohesionless soil can lose practically all of their foundation support when subjected to a vibratory loading, such as an earthquake. Similarly, the cell fill or the backfill can also liquefy, increasing the lateral loading against the cell.

3-26. Liquefaction Potential.

a. The significant factors influencing the liquefaction potential of the foundation or fill include: soil type, relative density or void ratio, initial confining pressure, intensity of ground shaking, and duration of ground shaking. The vulnerability of liquefaction-susceptible foundations can be initially estimated using simplified methods and charts that incorporate the most important variables that contribute to liquefaction.

b. Seed and Idriss (item 67) and Christian and Swiger (item 17) discuss these methods. Figures 3-7 and 3-8 define conditions where liquefaction is: very likely to occur, not very likely to occur, or a marginal condition exists where additional factors or further analysis should be considered. Charts of this nature are frequently updated and improved. For this reason, more recent material should be consulted for marginal or complex conditions. An estimate of the degree of seismic activity in the region can be obtained from ER 1110-2-1806.

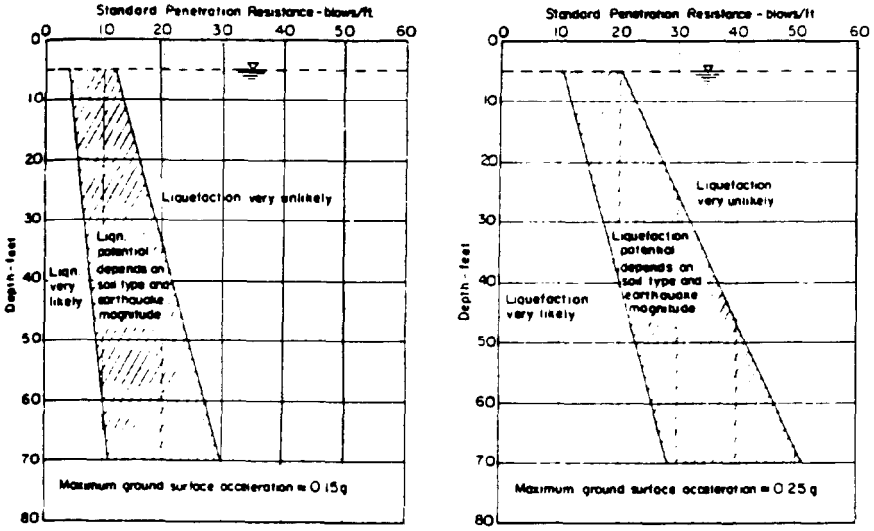

Figure 3-7. Liquefaction potential evaluation charts for sands with water table at depth of about 5 feet (item 67)

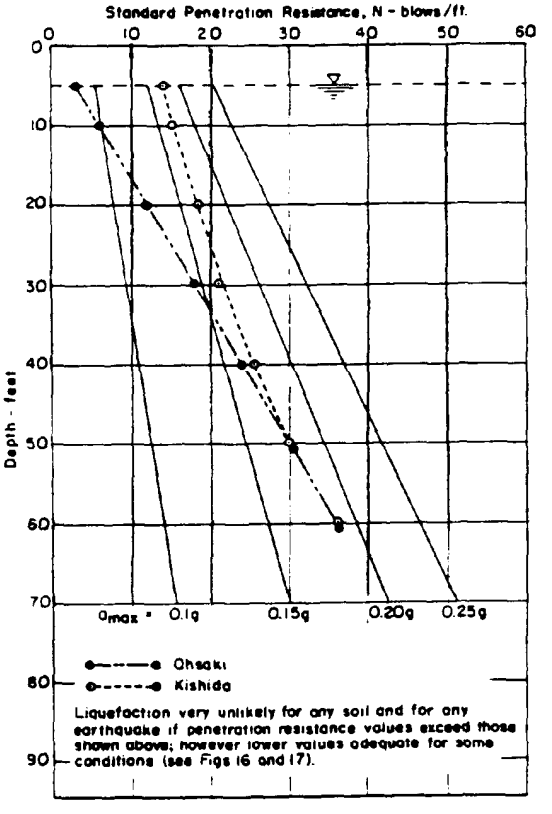

Figure 3-8. Penetration resistance values for which liquefaction is unlikely to occur under any conditions (item 67)

CHAPTER 4

ANALYSIS AND DESIGN

Section I. Characteristics

4-1. Structural Behavior. The stability of a sheet pile cell results from the composite action of the soil fill and the interlocking steel piling. The structural behavior of a cellular structure is governed by the engineering properties of the cell fill and the steel pile shell that contains and stiffens the cell fill. Because of this composite action, cells cannot be classified as a traditional concrete gravity monolith or a flexible earth embankment.

4-2. Forces.

a. Applied External Forces. Steel sheet pile cells are subject to external forces resulting from static water head, wave action, lateral earth pressure, and surcharge due to live load, earthquake, etc. These forces should be computed and applied as specified in the various engineer manuals referenced in Appendix A.

b. Reactive Berm Force. The passive force developed by a berm should be determined by a wedge analysis that accounts for the intersection of the failure wedge with the back slope of the berm. The Coulomb method of analysis or a Culmann graphical solution can be used when appropriate. The resistance provided by the berm should be limited to a value consistent with the berm reaction resulting from a sliding analysis.

4-3. Equivalent Cell Width. The equivalent width B of a sheet pile cellular structure is defined as the width of an equivalent rectangular section having a section modulus equal to that of the actual structure. For design purposes this definition can be simplified to equivalent areas as follows:

$$B = \frac{A}{2L}$$

where

B = equivalent width

A = area of main cell, plus one connecting cell

2L = center-to-center distance between main cells

See Figure 4-1.

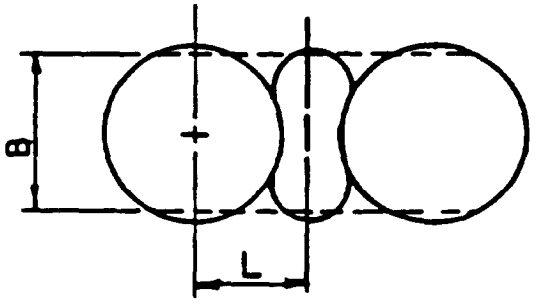

a. Plan circular cell

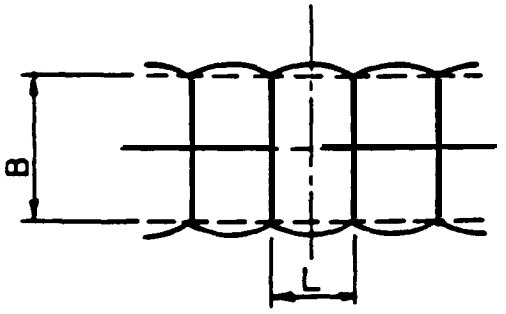

b. Plan arc and diaphragm cell

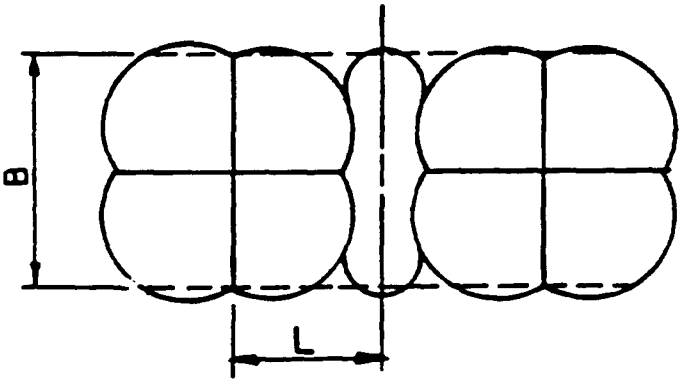

c. Plan clover leaf cell

Figure 4-1. Typical cellular cofferdam geometry

Section II. Loading Conditions

4-4. Cofferdams. The following loading conditions and requirements must be investigated:

a. Case I, Maximum Pool Condition. River pool to top of cell; cell fill saturation line assumed to slope from top outboard face of the cell to the inboard face, the slope being dependent upon the type of fill, the presence of a berm, and any positive measures taken to control the phreatic surface in the cell or the berm such as weep holes in the cell or drains and pumped wells in the berm, Figure 4-2a. It should be emphasized that the saturation level within the cell fill is perhaps the single most important consideration in the design of the cells; therefore, its location must be estimated with extreme care.

b. Case II, Initial Filling Condition. Balanced pools on both the inside and outside of the cofferdam; for determination of maximum interlock stress, cell fill is assumed to be completely saturated to top of cell unless positive measures are taken to preclude fill saturation, Figure 4-2b.

c. Case III, Drawdown Condition. Pool level inside cofferdam some specified distance below pool level outside cofferdam; cell fill saturation level varies uniformly between the outside pool level and some specified distance above the pool level inside the cofferdam, Figure 4-2c. This condition is checked to determine the maximum rate of dewatering. This condition can be critical for stability and interlock stress. The designer establishes the maximum rate of dewatering, as influenced by the cell fill saturation level, at which level the allowable interlock stress should not be exceeded and all factors of safety should be met. Since the cell fill saturation level is critical, the actual saturation level must be monitored in the field during dewatering to verify the assumed conditions. Instructions to this effect and the critical parameters should be included in the contract specifications and/or in "Special Instructions" to the resident engineer. Note that the forces acting upon a cofferdam can change with time. For example, overburden may be present on the inside of a cofferdam when it is initially dewatered; however, the overburden may subsequently be excavated, thus perhaps adversely affecting the stability of the cofferdam. In short, loading conditions not present during construction and initial dewatering must be anticipated and taken into account during design.

4-5. Retaining Structures. Cellular-type retaining walls are designed in accordance with those loading conditions and forces specified in the engineer manuals listed in Appendix A. The application of these loading criteria is basically the same if the structure is constructed of mass concrete or is a sheet pile cell filled with soil, the exception being that cells are not rigid structures; therefore, they should be designed for active earth backfill pressures. The most critical element in designing a stable cellular retaining structure is the degree of saturation of the cell fill. Consequently, the design should be based on the worst saturation condition both during construction and in-service.

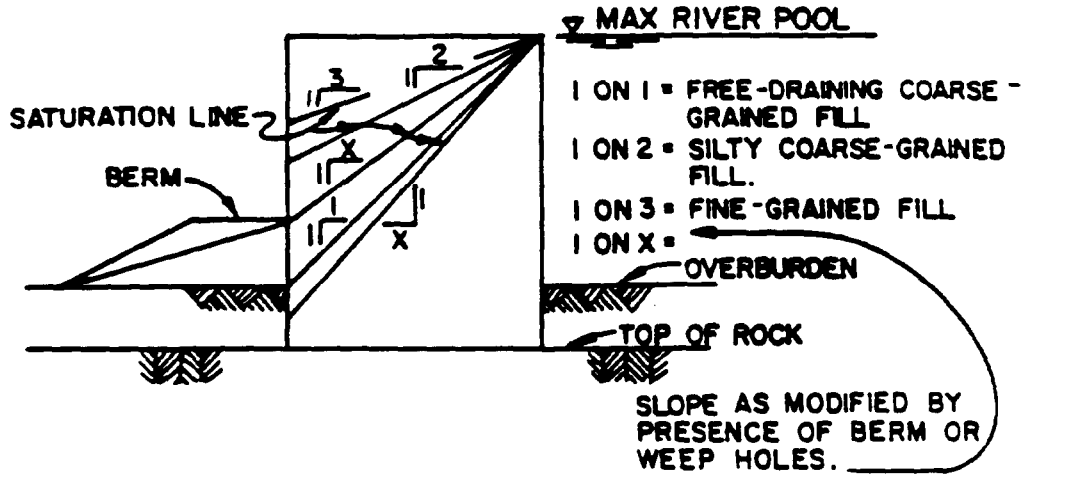

a. Case I, maximum pool condition

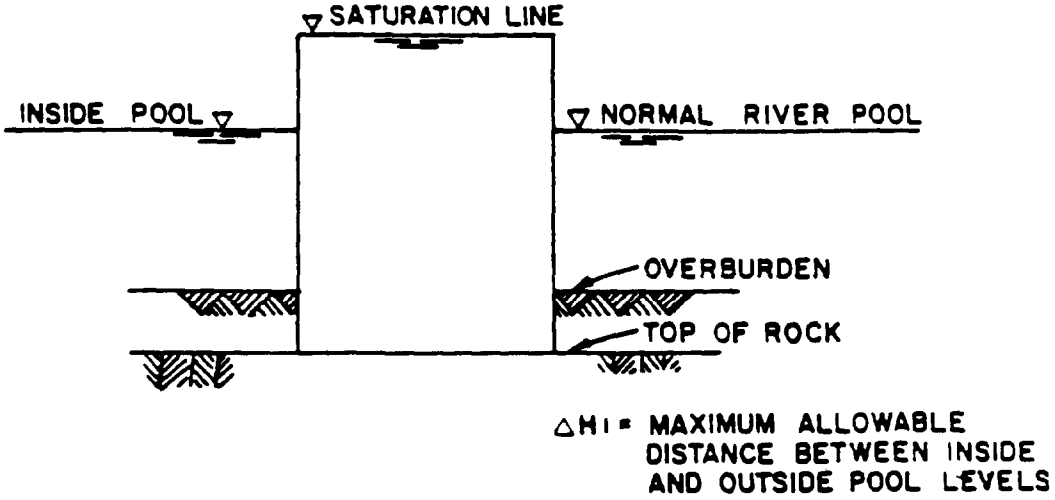

b. Case II, initial filling condition

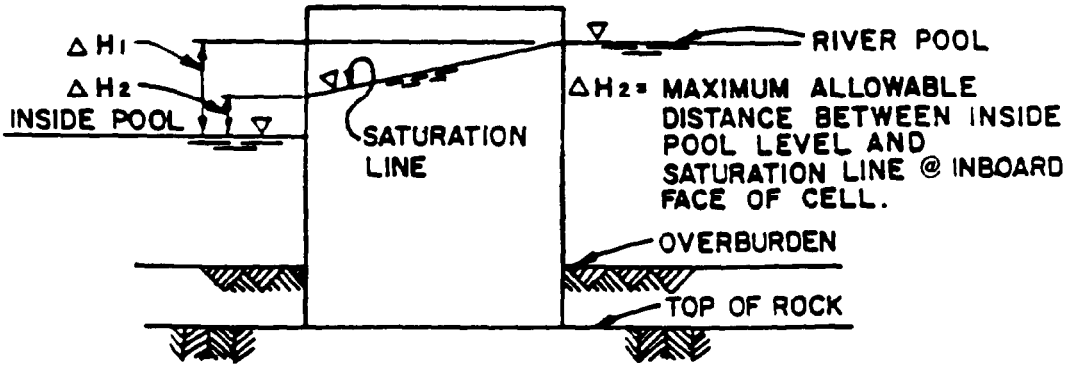

c. Case III, drawdown condition

Figure 4-2. Cofferdam loading conditions

4-6. Mooring Cells. Mooring cells are individual cells designed to resist live loads due to barge impact or line pull and the accompanying earth pressures depending on the direction of loading. The magnitudes of the impact and line pull loads are dependent on such circumstances as the size of tows, tow winch capacity, and other similar considerations. Attention should be paid to special loading cases such as fill placed hydraulically during construction, the placement of which could govern design because of the high interlock stresses due to the saturated fill.

4-7. Lock Walls. Cellular lock walls, including chamber walls and approach-type walls, are designed in accordance with the loading conditions outlined in the engineer manuals listed in Appendix A. Essentially, land lock walls are a special type of retaining wall and, due to the rapidly fluctuating pool of the lock chamber, care must be taken in establishing the most severe saturation condition for each load case. The degree of saturation of the cell fill is critical in the design. Controlling load cases must be determined for the various types of walls for which cells are adaptable. These include lock chamber land, river, and intermediate walls, and upper and lower approach walls.

4-8. Spillway Weirs. Cellular fixed weir structures consist of circular cells and connecting areas filled with rock or other granular material topped off by a concrete cap with a fixed concrete crest. Because of the flow over the weir, permanent upstream and downstream rock berms extending the full height of the cells are usually constructed for stability and scour prevention. In-service lateral loads are produced by upper and lower pool levels, earth pressures, and such special considerations as earthquake and ice thrust. Maximum interlock stresses will probably occur in the construction condition when the cells are filled and before the berms are built. Again, cell fill saturation is critical in designing for interlock stresses, especially if the cells are hydraulically filled or if construction is in the wet with the possibility of a rapidly fluctuating river.

Section III. Analysis of Failure Modes

4-9. External Cell Stability.

a. Sliding. For design and investigation of sheet pile cellular structures, the procedures outlined in the following paragraphs should be used to assess sliding stability on rock and soil foundations.

(1) Design Process. An adequate assessment of sliding stability must account for the basic structural behavior, the mechanism of transmitting compressive and shearing loads to the foundation, the reaction of the foundation to such loads, and the secondary effects of the foundation behavior on the structure. A fully coordinated team of geotechnical and structural engineers and geologists should ensure that the results of the sliding analyses are properly integrated into the design. Critical aspects of the design process which require coordination include: preliminary estimates of geotechnical data, subsurface conditions, and type of structure; selection of loading

conditions, loading effects, potential failure mechanisms, and other related features of the analytical models; evaluation of the technical and economic feasibility of alternative structures; refinement of the preliminary design to reflect the results of detailed geotechnical site explorations, laboratory testing, and numerical analyses; and modification of the structure during construction due to unexpected variations in the foundation conditions.

(2) Method of Analysis. The sliding analysis is based on the principles of structural and geotechnical mechanics, which apply a safety factor to the material strength parameters in a manner that places the forces acting on the structure and foundation wedges in sliding equilibrium. The factor of safety (FS) is defined as the ratio of the shear strength and the applied shear stress as follows.

$$FS = \frac{\tau_F}{\tau}$$

and

$$\frac{\tau_F}{FS} = \frac{\sigma \tan \phi}{FS} + \frac{c}{FS}$$

where

τ_F = shear strength

τ = applied shear stress

σ = normal stress

ϕ = angle of shearing resistance, or internal friction

c = cohesion

See Figure 4-3. A sliding mode of failure will occur along a presumed failure surface when the applied shearing force exceeds the resisting shearing forces. The failure surface can be any combination of plane and curved surfaces, but for simplicity, all failure surfaces are assumed to be planes which form the bases of wedges. The critical failure surface with the lowest safety factor is determined by an iterative process. Sliding stability of most sheet pile cellular structures can be adequately assessed by using a limit equilibrium

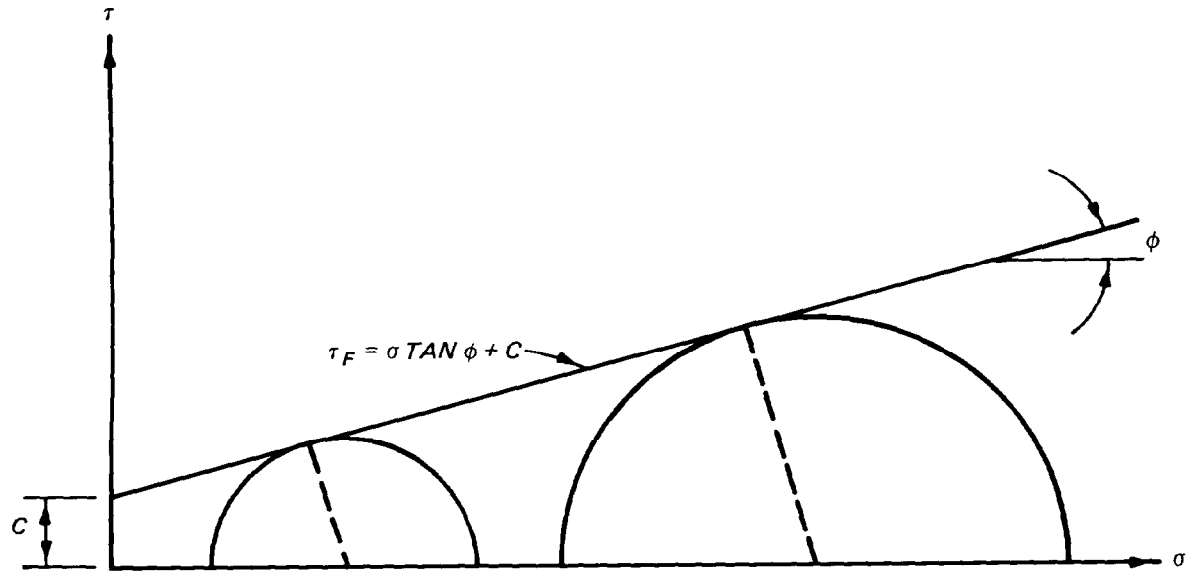

Figure 4-3. Shear strength envelope

approach. Designers must exercise sound judgment in performing these analyses. Assumptions and simplifications are as follows:

(a) A two-dimensional analysis is presented. These principles should be extended if unique, three-dimensional, geometric features and loads critically affect the sliding stability of a specific structure.

(b) Only force equilibrium is satisfied in this analysis. Moment equilibrium is not used. The shearing force acting parallel to the interface of any two wedges is assumed to be negligible. Therefore, the portion of the failure surface at the bottom of each wedge is loaded only by the forces directly above or below it. There is no interaction of vertical effects between the wedges.

(c) Analyses are based on assumed plane failure surfaces. The calculated safety factor will be realistic only if the assumed failure mechanism is kinematically possible.

(d) Considerations regarding displacements are excluded from the limit equilibrium approach. The relative rigidity of different foundation materials and the sheet pile cellular structure may influence the results of the sliding stability analysis. Such complex structure-foundation systems may require a more intensive sliding investigation than a limit equilibrium approach. The effects of strain compatibility along the assumed failure surface may be included by interpreting data from in situ tests, laboratory tests, and finite element analyses.

(e) A linear relationship is assumed between the resisting shearing force and the normal force acting along the failure surface beneath each wedge.

(3) Multiwedge System Analysis. A general procedure for analyzing multiwedge systems includes:

(a) Assuming a potential failure surface which is based on the stratification, location and orientation, frequency and distribution of discontinuities of the foundation material, and the configuration of the structure.

(b) Dividing the assumed slide mass into a number of wedges, including a single structural wedge.

(c) Drawing free body diagrams which show all the forces assumed to be acting on each wedge.

(d) Solving for the safety factor by direct or iterative methods. A derivation of the governing wedge equation for a typical wedge is shown in Appendix B. The governing wedge equation is

$$(P_{i-1} - P_i) = \frac{[(W_i + V_i)\cos\alpha_i - U_i + (H_{Li} - H_{Ri})\sin\alpha_i]\dfrac{\tan\phi_i}{FS_i}}{\cos\alpha_i - \sin\alpha_i\dfrac{\tan\phi_i}{FS_i}}$$

$$\frac{(H_{Li} - H_{Ri})\cos\alpha_i + (W_i + V_i)\sin\alpha_i + \dfrac{c_i}{FS_i}L_i}{\cos\alpha_i - \sin\alpha_i\dfrac{\tan\phi_i}{FS_i}}$$

where

i = number of wedges

$(P_{i-1} - P_i)$ = summation of applied forces acting horizontally on the ith wedge. (A negative value for this term indicates that the applied forces acting on the ith wedge exceed the forces resisting sliding along the base of the wedge. A positive value for the term indicates that the applied forces acting on the ith wedge are less than the forces resisting sliding along the base of that wedge.)

W_i = total weight of water, soil, rock, etc., in the ith wedge

V_i = any vertical force applied above top of the ith wedge

α_i = angle between the inclined plane of the potential failure surface of the ith wedge and the horizontal (positive is counterclockwise)

U_i = uplift force exerted along the failure surface of the ith wedge

H_{Li} = any horizontal force applied above the top or below the bottom of the left-side adjacent wedge

H_{Ri} = any horizontal force applied above the top or below the bottom of the right-side adjacent wedge

ϕ_i = angle of shearing resistance or internal friction of the ith wedge

c_i = cohesion or adhesion, whichever is the smaller on the potential failure surface of the ith wedge. (Cohesion should not exceed the adhesion at the structure-foundation interface.)

L_i = length along the failure surface of the ith wedge

The governing equation applies to the individual wedges. For a system of wedges to act as an integral failure mechanism, the factors of safety (FS) for all wedges must be identical, therefore

$$FS_1 = FS_2 = \ldots FS_{i-1} = FS_i = FS_{i+1} = \ldots FS_N$$

where N = number of wedges in the failure mechanism. The actual FS for sliding equilibrium is determined by satisfying overall horizontal equilibrium ($\Sigma F_H = 0$) for the entire system of wedges; therefore

$$\sum_{i=1}^{N} (P_{i-1} - P_i) = 0$$

and $P_o = P_N = 0$. Usually an iterative solution process is used to determine the actual FS for sliding equilibrium. The analysis proceeds by assuming trial values of the safety factor and unknown inclinations of the slip path until the governing equilibrium conditions, failure criterion, and definition of FS are satisfied. An analytical or a graphical procedure may be used for this iterative solution.

(4) Design Considerations. Some special considerations for applying the general wedge equation to specific site conditions are discussed below.

(a) The interface between the group of active wedges and the structural wedge is assumed to be a vertical plane located at the heel of and extending to the base of the structural wedge. The magnitudes of the active forces depend on the actual values of the FS and the inclination angles, a α , of the slip path. The inclination angles, corresponding to the maximum active forces for each potential failure surface, can be determined by independently analyzing the group of active wedges for a trial FS. In rock, the inclination may be predetermined by discontinuities in the foundation. The general equation only applies directly to active wedges with assumed horizontal active forces,

(b) The governing wedge equation is based on the assumption that shearing forces do not act on the vertical wedge boundaries; hence there can only be one structural wedge because the structure transmits significant shearing forces across vertical internal planes. Discontinuities in the slip path beneath the structural wedge should be modeled by assuming an average slip plane along the base of the structural wedge.

(c) The interface between the group of passive wedges and the structural wedge is assumed to be a vertical plane located at the toe of the structural wedge and extending to the base of the structural wedge. The magnitudes of the passive forces depend on the actual values of the safety factor and the inclination angles of the slip path. The inclination angles, corresponding to the minimum passive forces for each potential failure mechanism, can be determined by independently analyzing the group of passive wedges for a trial safety factor. The general equation only applies directly to passive wedges with assumed horizontal passive forces.

(d) Sliding analyses should consider the effects of cracks on the active side of the structural wedge in the foundation material due to differential settlement, shrinkage, or joints in a rock mass. The depth of cracking in cohesive foundation material can be estimated in accordance with the following:

$$d_c = \frac{2c_d}{\gamma} \tan\left(45° - \frac{\phi_d}{2}\right)$$

where

d_c = depth of crack in cohesive foundation material

$$c_d = \frac{c}{FS}$$

$$\phi_d = \tan^{-1}\left(\frac{\tan\phi}{FS}\right)$$

The value d_c in a cohesive foundation cannot exceed the embedment of the structural wedge. Cracking depth in massive strong rock foundations should be assumed to extend to the base of the structural wedge. Shearing resistance along the crack should be ignored, and full hydrostatic pressure should be assumed to act at the bottom of the crack. The hydraulic gradient across the base of the structural wedge should reflect the presence of a crack at the heel of the structural wedge.

(e) The effects of seepage forces should be included in the sliding analysis. Analyses should be based on conservative estimates of uplift pressures. For the estimation of uplift pressures on the wedges, it can be assumed that the uplift pressure acts over the entire area of the base of the wedge and if seepage from headwater to tailwater can occur across a cell, the pressure head at any point should reflect the head loss due to water flowing through the medium. The approximate pressure head at any point can be determined by the line-of-seepage method, which assumes that the head loss is directly proportional to the length of the seepage path. The seepage path for the structural wedge extends from the upper surface of the untracked material adjacent to the heel of the cell, along the embedded perimeter of the structural wedge, to the upper surface adjacent to the toe of the cell. Referring to Figure 4-4, the seepage distance is defined by points "a" and "b." The pressure head at any point is equal to the elevation head minus the produce of the hydraulic gradient times the distance along the seepage path to the point in question. Estimates of pressure heads for the active and passive wedges should be consistent with those of the heel and toe of the structural wedge. Uplift pressures can be reduced by pressure relief systems. The pressure heads acting on the wedges developed from the line-of-seepage analysis should be modified to reflect the effects of pressure relief systems. Uplift forces used for the sliding analyses should be selected in consideration of conditions which are presented in the applicable design memoranda. For a more detailed discussion of the line-of-seepage method, refer to EM 1110-2-2501. For the majority of structural stability computations, the line-of-seepage method is considered to be sufficiently accurate. However, there may be special situations where the flow net method is required to evaluate seepage forces.

(5) Seismic Sliding Stability. The sliding stability of a sheet pile cellular structure for an earthquake-induced base motion should be checked by assuming that the specified horizontal earthquake acceleration, and the vertical earthquake acceleration if in the analysis, will act in the most unfavorable direction. The earthquake-induced forces on the structure and foundation wedges can then be determined by a rigid body analysis. The horizontal earthquake acceleration can be obtained from seismic zone maps (ER 1110-2-1806) or, in the case where a design earthquake has been specified for the structure, an acceleration developed from analysis of the design earthquake. The vertical earthquake acceleration is normally neglected but can be taken as two-thirds of the horizontal acceleration, if included in the analysis. The added mass of the retained pool and soil can be approximated by Westergaard's parabola (EM 1110-2-2200), and the Mononobe-Okabe method (EM 1110-2-2502),

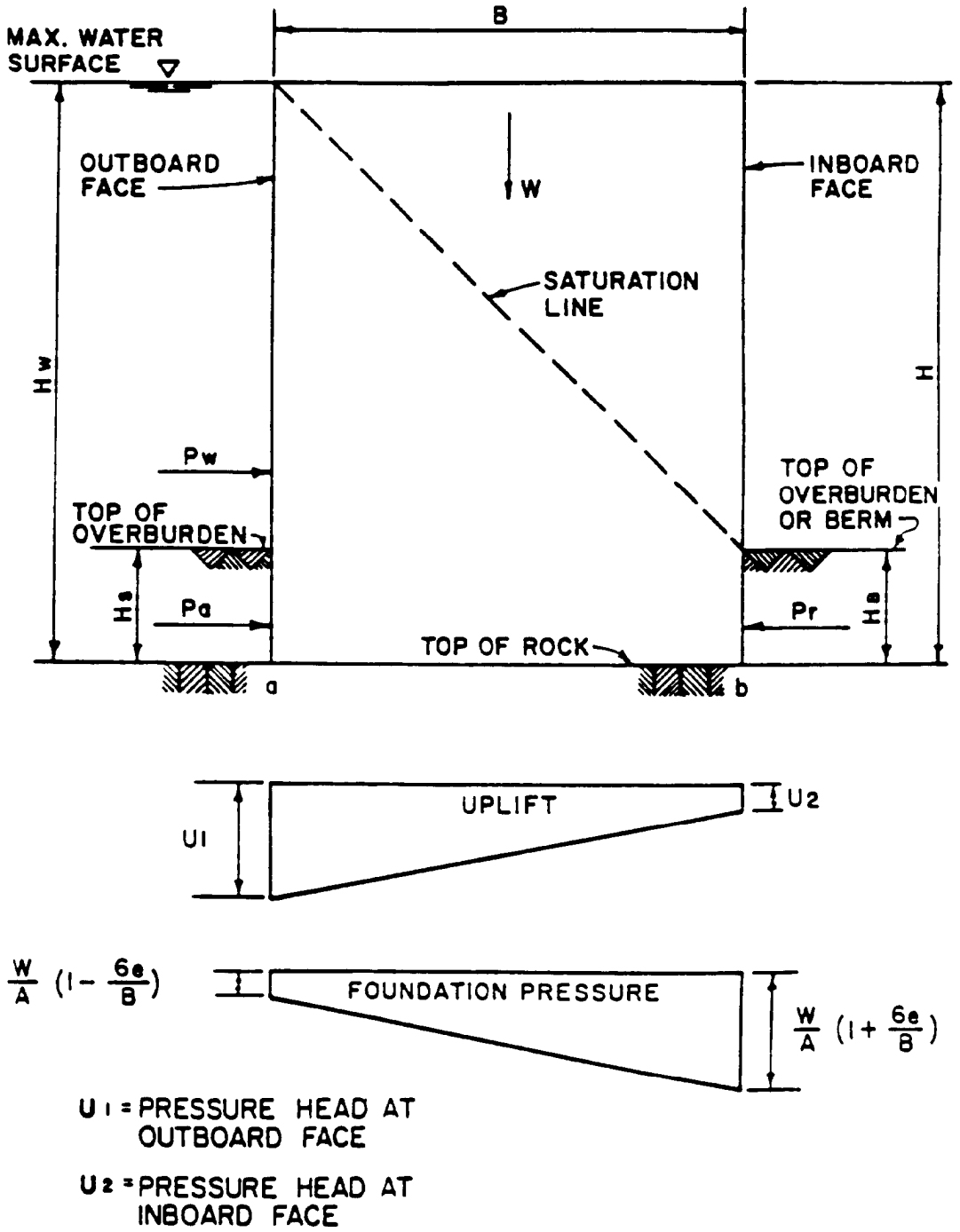

Figure 4-4. Overturning stability, typical loading and nomenclature

respectively. The structure should be designed for a simultaneous increase in force on one side and decrease on the opposite side of the cell when such can occur.

b. Overturning. A soil-filled cellular structure is not a rigid gravity structure that could fail by overturning about the toe of the inboard side. Before overturning could occur, the structure must have failed from causes such as pullout of the sheet piles at the heel and subsequent loss of cell fill. Nevertheless, a gravity-block analysis may serve as a starting point for determining the required cell diameter. Considering that the cell fill cannot resist tension, the cell should be proportioned so that the resultant of all forces falls within the middle one third of the equivalent rectangular base. This type of analysis will also serve to determine foundation pressures with

$$FP = \frac{W}{A}\left(1 \pm \frac{6e}{B}\right)$$

where

FP = computed foundation pressure

w = effective weight of cell fill

A = area of base = B x 1.0 for l-foot strip

e = eccentricity of resultant of all forces from center of cell

B = effective width of cell

See Figure 4-4. Again, it must be emphasized that overturning computations based on the gravity block concept do not give a true indication of cell stability.

c. Rotation (Hansen's Method).

(1) This method considers cellular structures to act as rigid bodies. For cells founded on rock, failure occurs along a circular sliding surface in the cell fill intercepting the toe of the sheet piles; however, for ease of calculation it is convenient to assume a logarithmic spiral of radius

$$r_\theta = r_o e^{\theta \tan \phi}$$

where

r_θ and θ = variables in the polar coordinate system

r_o = radius for $\theta = 0$

e = base of natural logarithms

ϕ = angle of internal friction of cell fill

As shown in Figure 4-5, the resultant of the unknown internal forces on the spiral will pass through the pole ω of the spiral and thus not enter into the equation of moments about the pole.

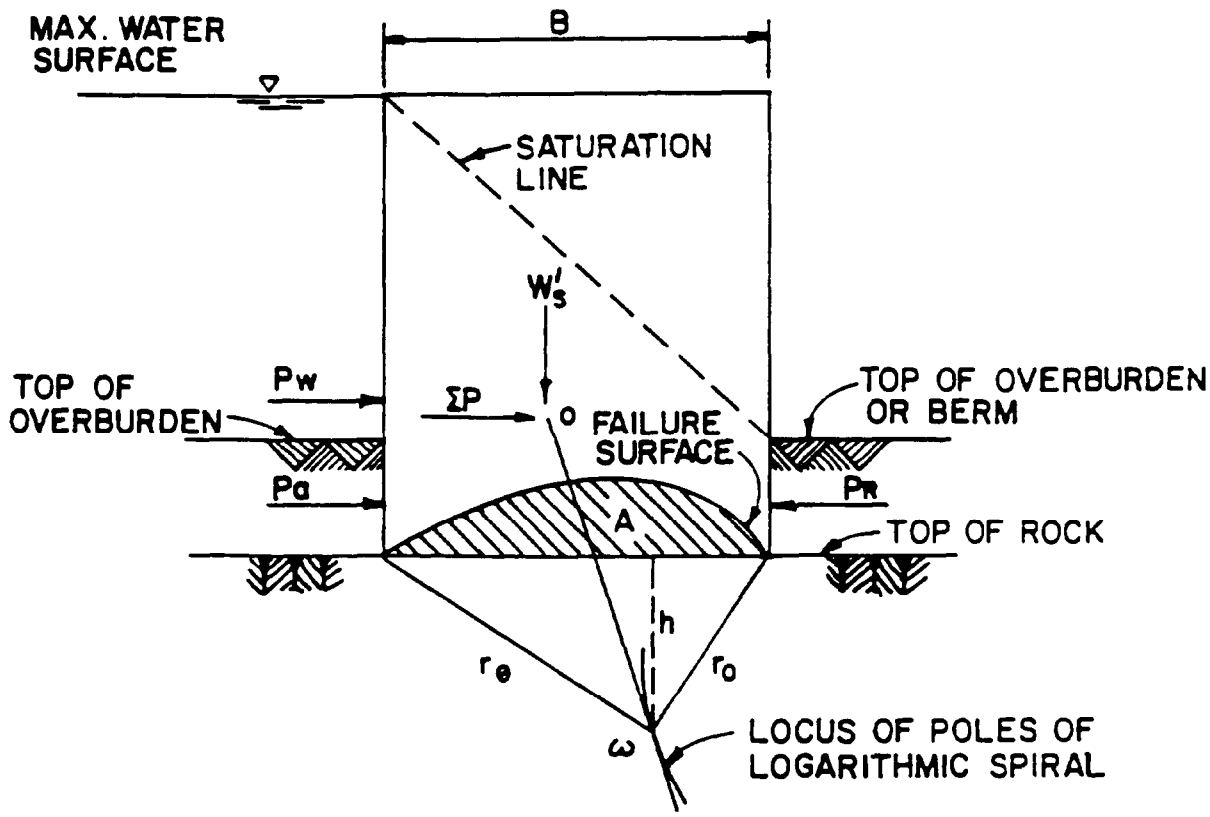

$$A = \frac{r_e^2 - r_o^2}{4 \tan \phi} - \frac{hB}{2}$$

o = INTERSECTION OF ΣP AND W_s'

oω = TANGENT FROM O TO LOCUS OF POLES OF LOGARITHMIC SPIRAL TO LOCATE ω

Figure 4-5. Rotation--Hansen's method, cell founded on rock

(2) The FS against failure is defined as the ratio of moments about the pole, that is, the ratio of the effective weight of the cell fill above the failure surface to the net overturning force. Thus

$$FS = \frac{M_B}{M_\omega}$$

where

M_B = moment about pole of W'_s

W'_s = effective weight of cell fill above failure surface

M_ω = moment about pole due to resultant overturning force ΣP

$\Sigma P = P_w + P_a - P_r$) as shown in Figure 4-5

(3) The pole of the logarithmic spiral may be found by trial until the minimum factor of safety is determined. However, since the pole of the failure spiral is on the locus of poles of the logarithmic spirals which pass through the toes of the sheet piles, the failure plane pole can be found by drawing the tangent to this locus from the intersection of W'_s and ΣP .

(4) Hansen's method, as applied to cells founded on rock, is applicable only where the rock is not influenced by discontinuities in the foundation to at least a depth h (Figure 4-5).

(5) The Hansen method of analysis for cells founded on soil is similar to that of cells founded on rock, except that the failure surface can be convex or concave, i.e., the surface of rupture can be in the cell fill or in the foundation. Both possibilities must be investigated to determine the minimum FS. The FS is defined as

$$FS = \frac{M_B}{M_\omega}$$

where

M_B = moment about pole due to ΣR

ΣR = resultant of W'_s , Pe_a , Pe_R , and U

W'_s = total weight of cell fill above failure surface

Pe_a and Pe_R = active and passive forces on embedded portion of cell, respectively

M_ω and ΣP = as previously defined

See Figure 4-6.

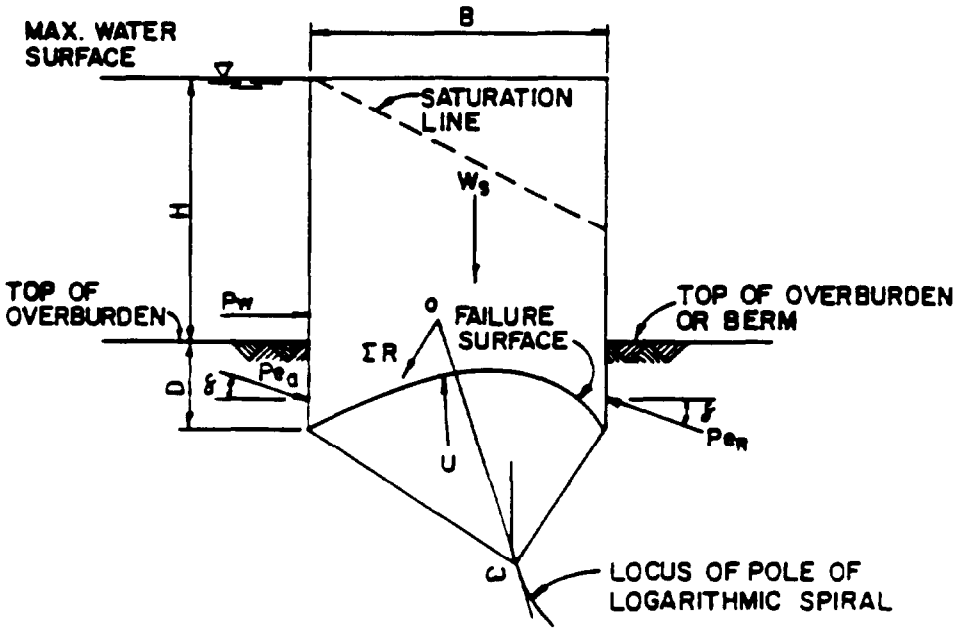

a. Rupture surface into the cell fill

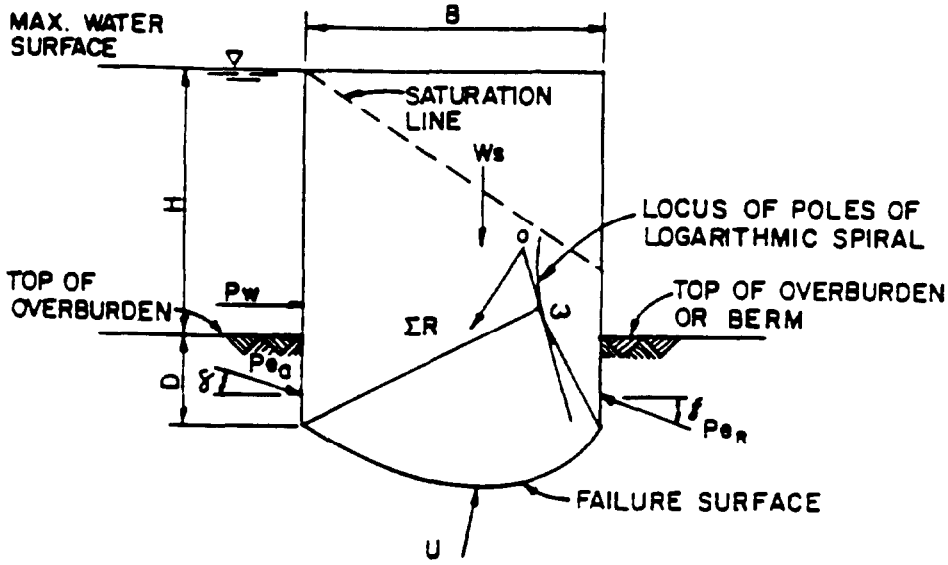

δ = ANGLE OF WALL FRICTION

b. Rupture surface into the foundation

Figure 4-6. Rotation--Hansen's method, cell founded on soil

(6) Stability, as determined by the Hansen method, is directly related to the engineering properties of the cell fill and the foundation and properly considers the saturation level within the cell as well as seepage forces beneath the cell. This method of analysis is particularly appropriate for cells founded in overburden. A more detailed explanation of this method can be found in discussions by Hansen (item 35) and Ovesen (item 55).

4-10. Deep-Seated Sliding Analysis.

a. Introduction.

(1) Sliding stability has been discussed in Paragraph 4.9a. In general, a cell on rock will very rarely fail on its base, probably because of friction of the fill and anchoring of the sheet pile penetrated to some distance into the rock (items 7, 19, 76, 77, and 78). Analysis and tests on sheet pile cells driven into sand indicated that failure by tilting due to overturning moment should occur long before the maximum sliding resistance is reached (item 55). Failure by sliding would occur if the resultant lateral force acts near the base of the cell, which is an unlikely event (item 47).

(2) However, sedimentary rock formations frequently contain clay seams between competent rock strata (item 31). Slickensides or a plane of weakness in a rock shelf may exist beneath the cell (items 7 and 77). Seams of pervious sand within the clay deposit, which may permit the development of excess hydrostatic pressure below the base of the cell, may also exist. Excess hydrostatic pressure reduces the effective stress and, subsequently, reduces shearing resistance to a very small value. This is a very common occurrence in alluvial soils (items 97 and 43).

(3) Drop of shear strength of clay shale to its residual strength due to removal of overburden pressure after excavation was observed by Bjerrum (item 8). Fetzer (item 30) reported a progressive failure of clay shale below Cannelton cofferdam.

(4) Hence, the possibility of a deep-seated failure along any weak seam below a cellular structure always exists before any other type of failure could occur. A detailed study of the subsurface below the design bottom of the cell and an adequate sliding analysis should, therefore, be conducted at the time of a cellular cofferdam design. If any potential for a sliding failure exists, adequate measures to prevent such failure should be incorporated in the cell design. Details of such investigation and preventive measures are discussed in subsequent paragraphs. Figure 4-7 illustrates how a deep-seated sliding failure may occur below a cell.

b. Study of Subsurface Conditions. The subsurface investigation should be extended to at least 15 to 20 feet below the design base level of the cell. Continuous sampling of soils or coring of rock should be performed in the presence of experienced geotechnical personnel to identify and locate any weak seam below the base. The presence of any cracks or joint pattern in the apparently competent rock mass below the base should be carefully investigated

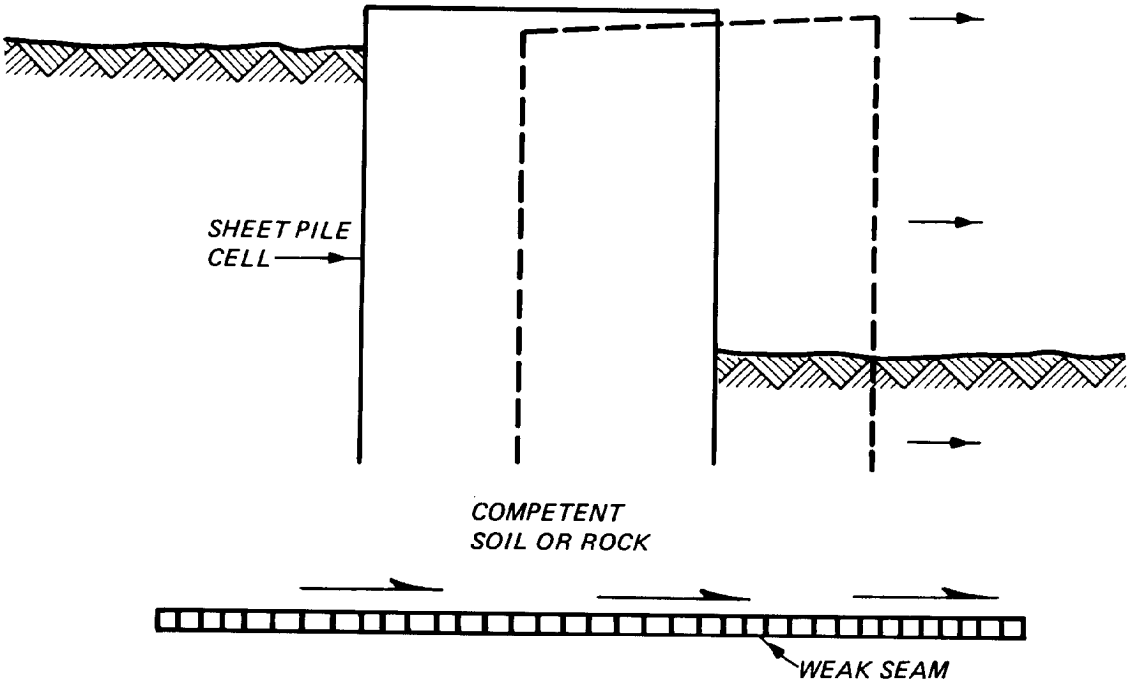

Figure 4-7. Deep-seated sliding failure

(item 13). If soft seams or presheared surfaces due to faulting are found, extremely low shear strengths approaching the residual strengths should be used in the analysis. Unless 100 percent core recovery is achieved, the presence of a soft or presheared seam should be assumed where the core is missing (item 30). Investigation of any weak seam below the cell should be extended to some distance beyond the inboard and the outboard sides of the cofferdam. This information will be useful in conducting sliding stability analyses.

c. Methods of Sliding Stability Analysis.

(1) Wedge Method.

(a) The FS against sliding failure along a weak seam below the cell can be determined by using the method of wedge analysis described in paragraph 4.9a. This method is discussed in detail in ETL 1110-2-256.

(b) For deep-seated sliding, a major portion of the failure mass slides along the weak seam. Hence, for each trial analysis, a large part of the failure surface should pass through the weak seam. The structural wedge is formed by the boundary of the cell section extended downward to the assumed failure surface. This wedge acts as the central block between the active and the passive wedge systems. Other assumptions including some simplifications made in the sliding analysis are the same as those discussed in paragraph 4-9a.

(c) The effects of cracks in the active wedge system and of seepage within the sliding mass including the uplift pressure beneath the structural wedge should be considered in the manner described in paragraph 4.9a(4). For each trial failure surface system, the minimum FS should be determined. The lowest value from all of these trials is likely to be the actual FS against sliding failure. A FS of 1.5 is adequate against a deep-seated sliding failure.

(2) Approximate Method. The approximate method may be used when the weak seam is located near the bottom of the sheet pile. The active and passive pressures acting on the sheet pile walls and the shearing resistance of the weak seam near the cell bottom are shown in Figure 4-8. Notation for Figure 4-8 follows:

B = equivalent width of cell, as discussed in paragraph 4-3

H_W = head of water on the outboard side

H_S = height of overburden on the outboard side

H_B = height of berm or overburden on the inboard side

W = weight of cell fill above the weak seam

p_W = hydrostatic pressure due to head, H_W

P_a = active earth pressure due to overburden of height, H_S

P_R = resultant of passive earth pressure due to buoyant weight of the berm + hydrostatic pressure due to height, H_B

R_S = lateral resistance along weak seam

Considering unit length of the cofferdam wall,

$$W = \frac{1}{2}(\gamma_c + \gamma_c')B(H_W - H_B) + \gamma_c' B H_B$$

where

γ_c = unit weight of cell fill

γ_c' = submerged unit weight of cell fill

$$R_S = W \tan \phi + Bc$$

where

ϕ = angle of shearing resistance

c = cohesion of materials in the weak seam

For clay, $\phi = 0$ and c=c

For sand, $\phi = \phi$ and c=o

$$P_W = 1/2\gamma_W H_W^2$$

where γ_W = unit weight of water

$$P_a = 1/2K_a\gamma' H_S^2$$

where K_a = active earth pressure coefficient of overburden materials, and γ' = submerged unit weight of overburden materials.

$$P_R = P_P = 1/2\gamma_W H_B^2$$

where P_P = passive earth pressure of the saturated berm or overburden. Hence, the FS against sliding is

$$FS = \frac{W \tan \phi + B_c + P_R}{P_W + P_a}$$

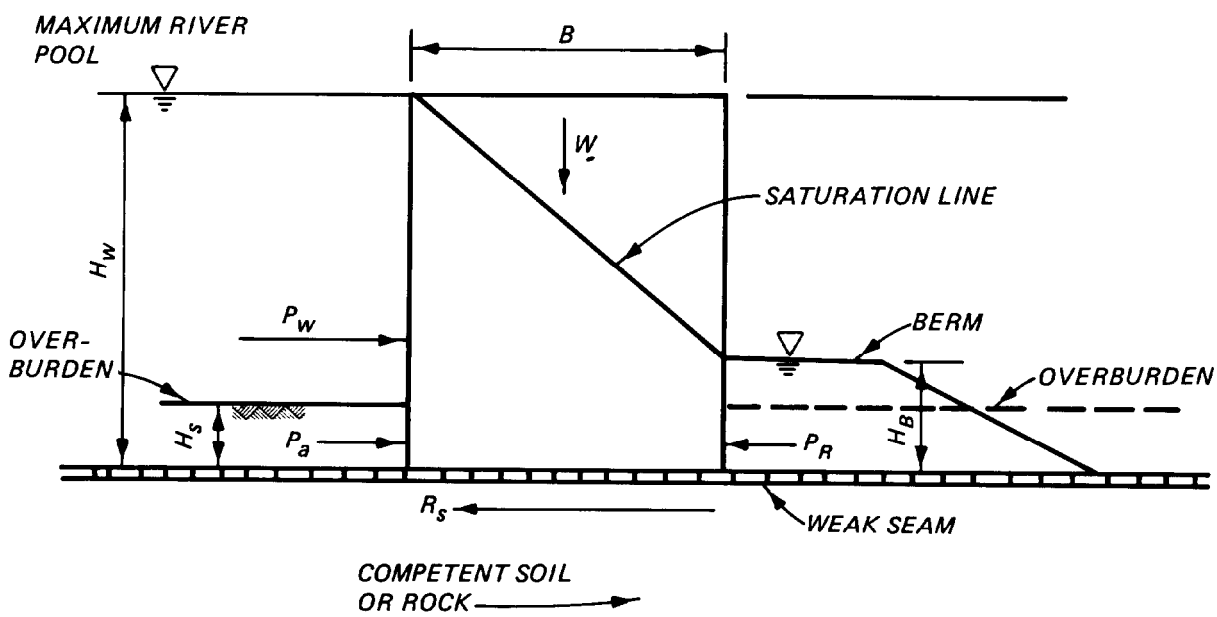

Figure 4-8. Sliding along weak seam near bottom of cell (approximate method)

(3) Culmann's Method. For a berm with combined horizontal and inclined surfaces, passive pressure should be calculated using Culmann's graphical method or any other suitable method. The lateral resistance at the interface of the berm and the weak seam should also be calculated. The smaller of the lateral resistance and the passive pressure should be considered in calculating the FS against sliding (item 27). For overburden with the horizontal surface to a great distance on the inboard side, the passive pressure can be calculated, using the passive earth pressure coefficient K_p. Since no effect of the weak seam is considered in the passive pressure calculation, the FS based on this passive pressure may be somewhat approximate. For more precise analysis, the wedge method described previously should be adopted.

d. Prevention of Sliding Failure. The potential for sliding stability failure can be considerably reduced by adopting the following measures.

(1) Seepage Control Below Cell. The extension of the sheet piles to considerably deeper levels below the cell will develop longer drainage paths and reduce the flow rate through the foundation materials, thereby decreasing the uplift pressure below the structural and the passive wedge systems and increasing the FS against sliding failure.

(2) Dissipation of Excess Hydrostatic Pressure. Excess hydrostatic pressure within a sand seam between clay strata below the cell will be dissipated quickly if adequate relief wells are installed within the seam. The shear strength of the sand seam will be increased and the potential for sliding failure along the seam will be reduced.

(3) Berm Construction on the Inboard Side. An inside berm will increase the passive resistance and will also aid in lengthening the seepage path discussed above only if impermeable berm is used. The berm should be constructed of free-draining sand and gravel so as to act as an inverted filter maintaining the free flow of pore water from the cell fill and the foundation materials. The increase in the passive resistance due to berm construction will improve the FS against sliding failure.

4-11. Bearing Capacity Analysis. The cells of a cofferdam must rest on a base of firm material that possesses the bearing capacity to sustain the weight of the filled cells (EM 1110-2-2906). Presence of weak soil beneath the cell may cause a bearing capacity failure of the entire structure inducing the cell to sink or rotate excessively (item 46). Figure 4-9 shows graphically bearing capacity failure of a cell supported on weak soil. The bearing capacity of rock is usually controlled by the defects in the rock structure rather than the strength alone. Defective and weak rock, such as some chalks, clay shales, friable sandstones, very porous limestones, and weathered, cavernous, or highly fractured rock may cause very large settlements under a relatively small load and reduce the load bearing capacity. Interbedding of hard (such as cemented sandstone) and very soft (such as claystone) layers may also cause bearing capacity problems (items 33 and 74). A cofferdam on rock

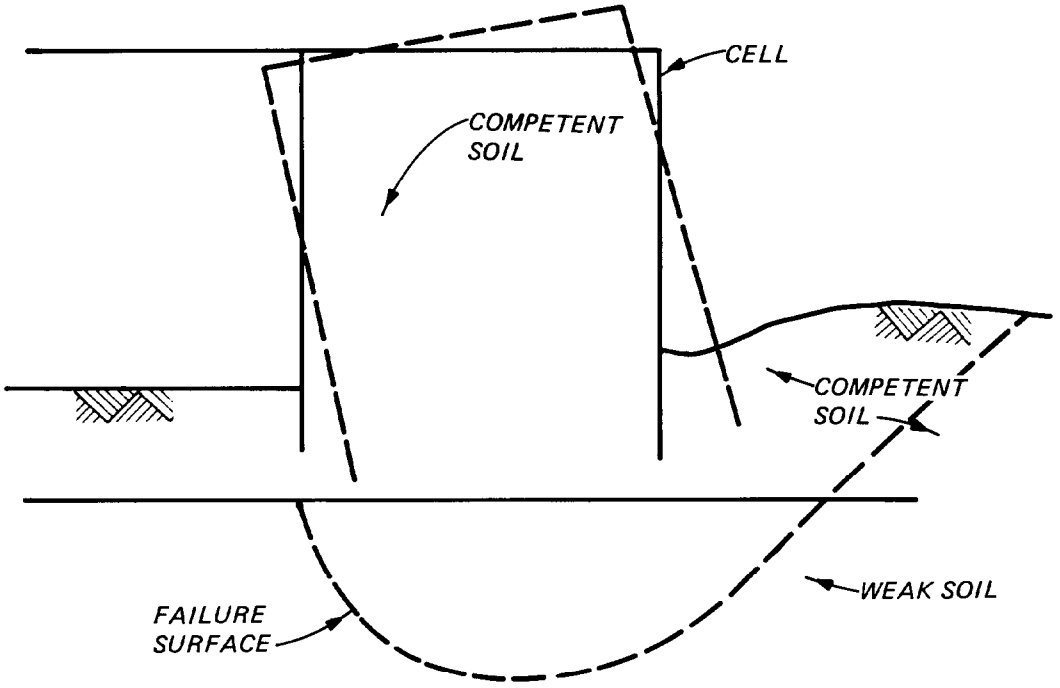

Figure 4-9. Bearing capacity failure

may not function properly due to shear failure of soil on the base of the rock or by deep-seated sliding along any weak seam within the rock. This aspect of the design has been discussed in paragraph 4-10. The methods of determining bearing capacity of soils and rock to support a sheet pile cellular structure are discussed below:

a. Bearing Capacity of Soils. The bearing capacity of granular soils is generally good if the penetration of the sheet piles into the overburden is adequate and seepage of water underneath the cell base is controlled. The seepage which reduces the shear strength of the soil on the inboard side of the cofferdam and thus reduces the bearing capacity can be controlled by using an adequate berm on the inboard side. Cellular structures on clay are not very common. The bearing capacity of clay depends on the consistency of the soils; the stiffer or harder the clay, the better the bearing capacity. For a good bearing capacity, the clay should be stiff to hard. However, even on relatively soft soils, cellular structures have been successfully constructed using heavy sand or rockfill berms (EM 1110-2-2906 and item 19). The bearing capacity of both cohesive and granular soils supporting cellular structures can be determined by Terzaghi's method of analysis (EM 1110-2-2906 and items 52, 27, and 85). However, the failure planes assumed for the development of the Terzaghi bearing capacity factors (item 80) do not appear to be as realistic as those developed specifically for cellular structures by Hansen (item 36). Hence, for bearing capacity investigation, the Hansen method of analysis should also be used (item 31). The investigation of failure along any weak stratum below the cell can be conducted by using the limit

equilibrium analysis, as discussed previously in paragraph 4-9a. Methods of determining bearing capacity of soils are given below:

(1) Terzaghi Method, The ultimate bearing capacity is given by

$$q_f = 1/2\gamma BN_\gamma + cN_c + \gamma D_f N_q \qquad [4\text{-}1]$$

for strip loaded area and by

$$q_f = 0.6\gamma BN_\gamma + 1.3\ cN_c + \gamma D_f N_q \qquad [4\text{-}2]$$

for circular loaded area

where

γ = unit weight of soil around cell

B = equivalent cell width, as discussed in paragraph 4-3

N_c, N_q, N_γ = the Terzaghi bearing capacity factors (item 82) depending on the angle of shearing resistance, ϕ, of the soil

c = cohesion of soil

D_f = distance from the ground surface to the toe of the cell

The relevant tests to determine the strength parameters c and ϕ for the bearing capacity analysis are mentioned in EM 1110-2-1903. The FS against bearing capacity failure should be determined by the maximum pressure at the base of the cellular structures. Figure 4-10 shows the section of cofferdam of equivalent width, B , and subjected to a hydrostatic pressure of P_W , and active and passive pressures of P_a and P_R , respectively. The net overturning moment due to these lateral pressures is given by

$$M = 1/3(P_W H_W + P_a H_S - P_R H_B) \qquad [4\text{-}3]$$

where H_W , H_S , and H_B are as shown in Figure 4-10. The bearing soil is subjected to a uniform vertical compressive stress of W/B , where W is the weight of the cell fill. In addition, the soil is also subjected to a compressive stress developed due to the net overturning moment, M (equation [4-3]). This stress is equal to $6M/B^2$ (Figure 4-10). Hence, the FS against bearing capacity failure

$$FS = \frac{q_f}{\frac{W}{B} + \frac{6M}{B^2}}$$

where q_f can be determined from equation [4-1] or [4-2]. The FS for sand should not be less than 2 and for clay not less than 3, as given in Table 4-4.

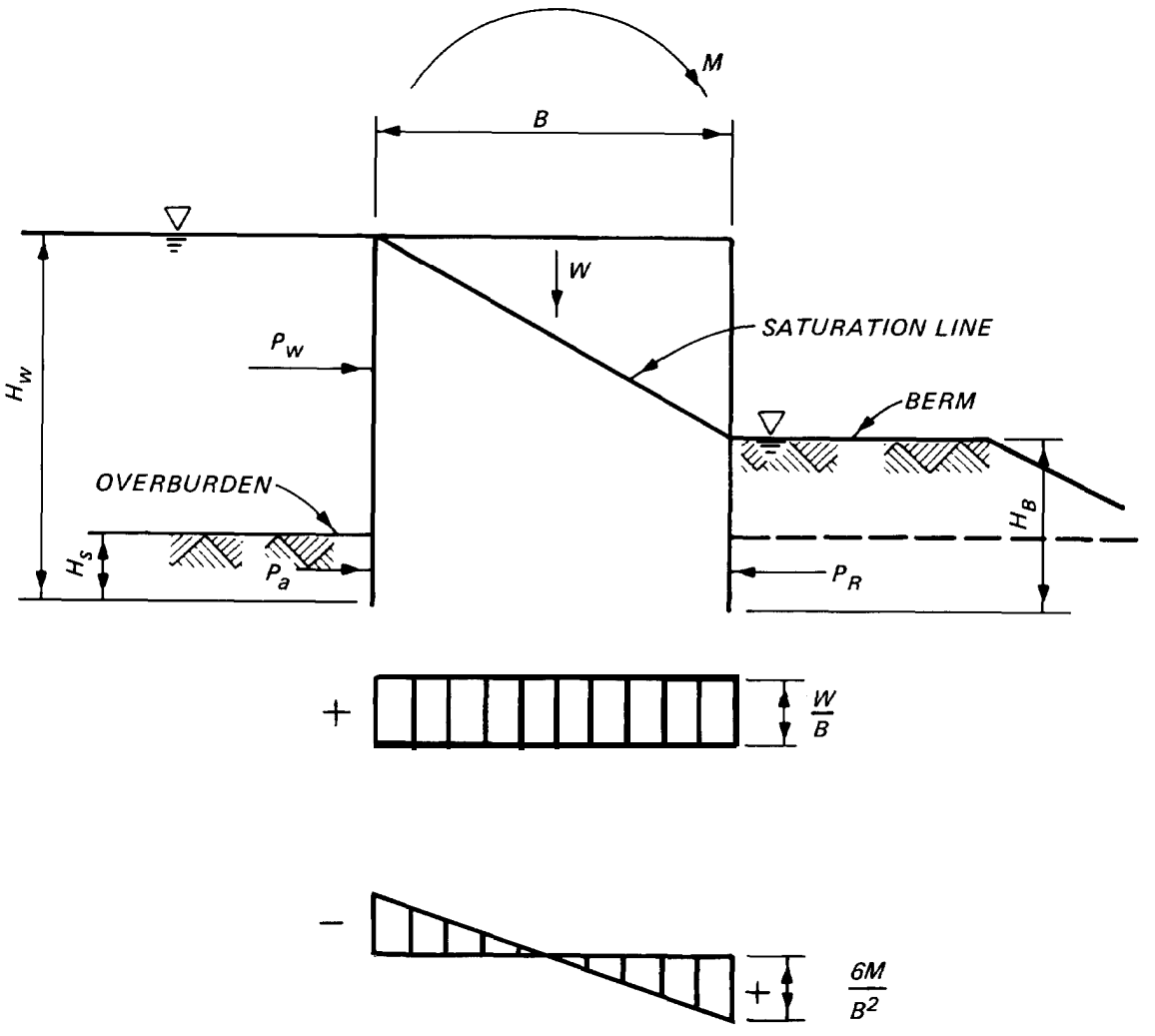

NET OVERTURNING MOMENT, $M = \frac{1}{3}\ (P_W H_W + P_a H_s - P_R H_B)$

Figure 4-10. Base soil pressure diagram

(2) Hansen Method. In the Hansen method of analysis, cells supported on soils are assumed to have surface of rupture within the cell fill (convex failure surface) or in the foundation soils below the cell (concave failure surface). Both possibilities must be investigated to determine the minimum FS. Details of this method of analysis have been discussed in paragraph 4-9c.

(3) Limit-equilibrium Method. This analysis is based on assumed plane failure surfaces which form the bases of the failure wedges. A FS is applied to the material strength parameters such that the failure wedges are in limiting equilibrium. The critical failure surface with the lowest safety factor is determined by trial wedge method. Details of this method of analysis have been discussed in paragraph 4-9. For the preliminary design of a cofferdam on soils, bearing capacity can be determined by the Terzaghi method. However, more rigorous analysis by the limit-equilibrium method should be applied for the final design. Hansen's method of analysis should be used to determine FS against a rotational failure of the cellular structure.

b. Bearing Capacity of Rock. The bearing capacity of rock is not readily determined by laboratory tests on specimens and mathematical analysis, since it is greatly dependent on the influence of nonhomogeneity and microscopic geologic defects on the behavior of rock under load (items 20, 33, and 74). The bearing capacity of homogeneous rock having a constant angle of internal friction ϕ and unconfined compressive strength q_u can be given as

$$q_f = q_u(N_\phi + 1) \qquad [4\text{-}4]$$

where $\tan^2\left(45° + \frac{\phi}{2}\right)$. To allow for the possibility of unsound rock, a high value of the FS is generally adopted to determine allowable bearing pressure (item 11). A FS of 5 may be used to obtain this allowable pressure from equation [4-4]. Even with this FS, the allowable loads tend to be higher than the code values sampled in Table 4-1. In the absence of test data on rock samples, the somewhat conservative values in Table 4-1 may be used for preliminary design. When the rock is not homogeneous, the bearing capacity is controlled by the weakest condition and the defects present in the rock. For a rock mass having weak planes or fractures, direct shear tests conducted on presawn shear surfaces give lower bound residual shear strengths (item 18). A minimum of three specimens should be tested under different normal stresses to determine cohesion c and angle of internal friction ϕ. The ultimate bearing capacity can then be determined from equations [4-1] and [4-2] (Terzaghi method) by using the c and ϕ values obtained as described above. A FS of at least 3 should be adopted to determine allowable bearing pressure. Cells founded on rock should also be checked for rotational failure using Hansen's method as discussed in paragraph 4-9c. The minimum FS for this failure is 1.5, as given in Table 4-4.

4-12. Settlement Analysis. Generally two types of settlement can occur within a sheet pile cellular structure supported on compressible soils: the settlement of the cell fill and the settlement of the sheet piles. In some

Table 4-1

Allowable Bearing Pressures for Fresh Rock of Various Types (According to typical building codes, reduce values accordingly to account for weathering or unrepresentative fracturing.[1] Values are from Thorburn (item 83) and Woodward, Gardner, and Greer (item 96).)

Rock Type	Age	Location	Allowable Bearing Pressure (MPa) (1 MPa = 10.4 tsf)
Massively bedded limestone[2]		United Kingdom[3]	3.8
Dolomite	Late Paleozoic	Chicago	4.8
Dolomite	Late Paleozoic	Detroit	1.0-9.6
Limestone	Upper Paleozoic	Kansas City	0.5-5.8
Limestone	Upper Paleozoic	St. Louis	2.4-4.8
Mica schist	Precambrian	Washington	0.5-1.9
Mica schist	Precambrian	Philadelphia	2.9-3.8
Manhattan schist[4]	Precambrian	New York	5.8
Fordham gneiss[4]	Precambrian	New York	5.8
Schist and slate		United Kingdom[3]	0.5-1.2
Argillite	Precambrian	Cambridge, MA	0.5-1.2
Newark shale	Triassic	Philadelphia	0.5-1.2
Hard, cemented shale		United Kingdom[3]	1.9
Eagleford shale	Cretaceous	Dallas	0.6-1.9
Clay shale		United Kingdom[3]	1.0
Pierre shale	Cretaceous	Denver	1.0-2.9
Fox Hills sandstone	Tertiary	Denver	1.0-2.9
Solid chalk	Cretaceous	United Kingdom'	0.6
Austin chalk	Cretaceous	Dallas	1.4-4.8
Friable sandstone and claystone	Tertiary	Oakland	0.4-1.0
Friable sandstone (Pica formation)	Quaternary	Los Angeles	0.5-1.0

Notes:

1. When a range is given, it relates to usual rock conditions.
2. Thickness of beds greater than 1 m, joint spacing greater than 2 m; unconfined compressive strength greater than 7.7 MPa (for a 4-inch cube).
3. Institution of Civil Engineers Code of Practice 4.
4. Sound rock such that it rings when struck and does not disintegrate. Cracks are unweathered and open less than 1 cm.

areas settlement may also be caused by dewatering of the cofferdam area. Details of these settlements are discussed below:

a. Settlement of Cell Fill. The settlement of cell fill occurs under the self load of the fill placed within the cell. In normal construction procedure hydraulic fill is pumped into the cell in layers. Each increment of fill consolidates under its own weight and also under the load of the layers above it. Thus, the settlement of the lower fill has progressed by the time the last fill is placed (item 92). For granular fill, generally a majority of the settlement will have been accomplished soon after the fill placement. Hence, the postconstruction settlement of granular cell fill under its own weight is, generally, insignificant. No reliable method of settlement estimate of the cell fill during placement is currently available. This settlement is also of not much importance, since most of this settlement occurs before any additional vertical or lateral loads are applied to the cell. Any volume decrease of the cell fill due to settlement can always be compensated by placing additional fill in the cell before any other load is applied to the cell. Hence, no method of settlement estimate of the cell fill has been included herein. Cell fill can be densified by using vibratory probes to prevent seismically induced liquefaction, minimize settlements, and obtain necessary density of the cell fill required for cofferdam stability (items 65 and 72). However, generation of excess pore pressure in the cell fill and increase in interlock tension were reported during compaction by vibration. Hence, a pore pressure relief system should also be provided within the cell fill to limit excess pore pressures and to aid the compaction by draining water from the soil.

b. Settlement of Sheet Pile Cofferdam. A cellular cofferdam underlain by compressible soils below its base will undergo settlement due to the weights of the cell and berm fills. As observed by Terzaghi (item 81), if the compressible soils below the cofferdam continue to consolidate after the overturning moment has been applied, a relatively small moment suffices to produce a very unequal distribution of pressure at the base of the cell. This reduces the capacity of the cofferdam to carry overturning moment. Large postconstruction settlements of cellular wharf structure might damage the deck slab and interfere with all normal operations from the deck. A study of settlement behavior of a cellular structure is an essential part of the design; This settlement can be computed by the Terzaghi method (item 44) if the cell is underlain by clay, and by the Schmertmann (item 63) or Buisman (item 62) method if underlain by granular soils. Details of settlement analysis are discussed below:

(1) Settlement of Cofferdam on Clay. In a clay layer beneath the cofferdam, more settlement will occur below the center than will occur below the edges of the cofferdam because of larger stresses below the center than the edges under the uniform flexible load of the cell fill at the base of the cells. Additional unequal settlements will occur below the cells if berm or backfill is present on one side of the cofferdam. Figure 4-11 is a sketch of a cell on compressible soils underlain by rock.

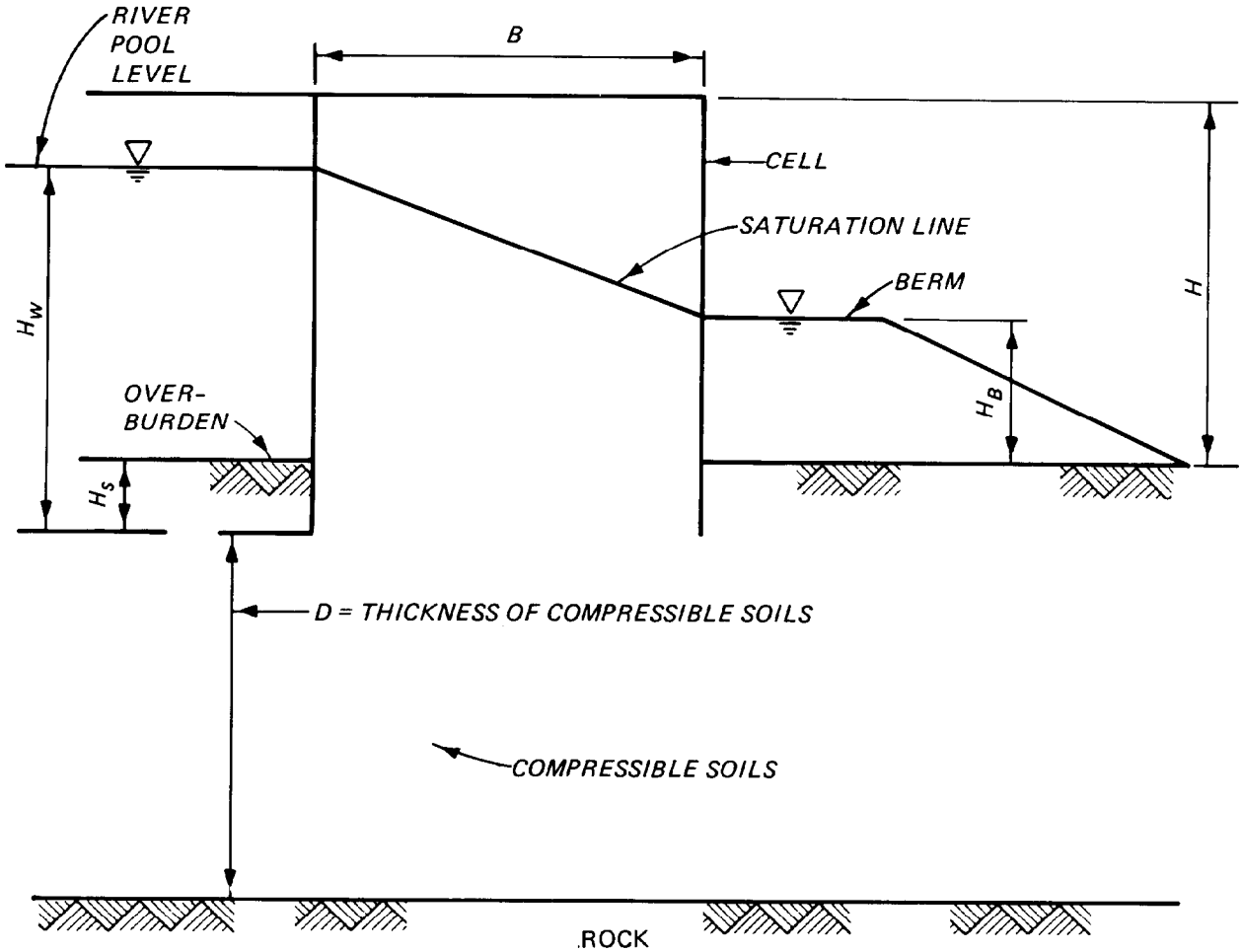

Figure 4-11. Cellular cofferdam on compressible soils

(a) Stresses Below Cell. Stresses at various levels below the center and the sides of the cellular cofferdam can be determined using Boussinesq's theory of stress distribution. The load due to cell fill in the cofferdam may be assumed to be a uniformly distributed contact pressure of a continuous footing of equivalent width B as defined in paragraph 4-3. For preliminary calculation, B may be taken as 0.85 times the cell diameter. If no rock is encountered at a relatively shallow depth, Fadum's chart in conjunction with the method of superposition of areas as given in EM 1110-2-1904 may be used to compute stresses in the compressible soil below any point in the cofferdam. If rock is encountered at a relatively shallow depth, stresses may be computed from the influence values given in the Sovinc (item 73) chart which includes correction for the finite thickness of the stressed medium (Figure 4-12). The trapezoidal section of the berm fill may be approximated to a rectangular section and the stresses may then be computed as described before. Alternately, the berm section may be divided into a rectangular and a triangular section. The stresses below the cell, due to these rectangular and triangular surface

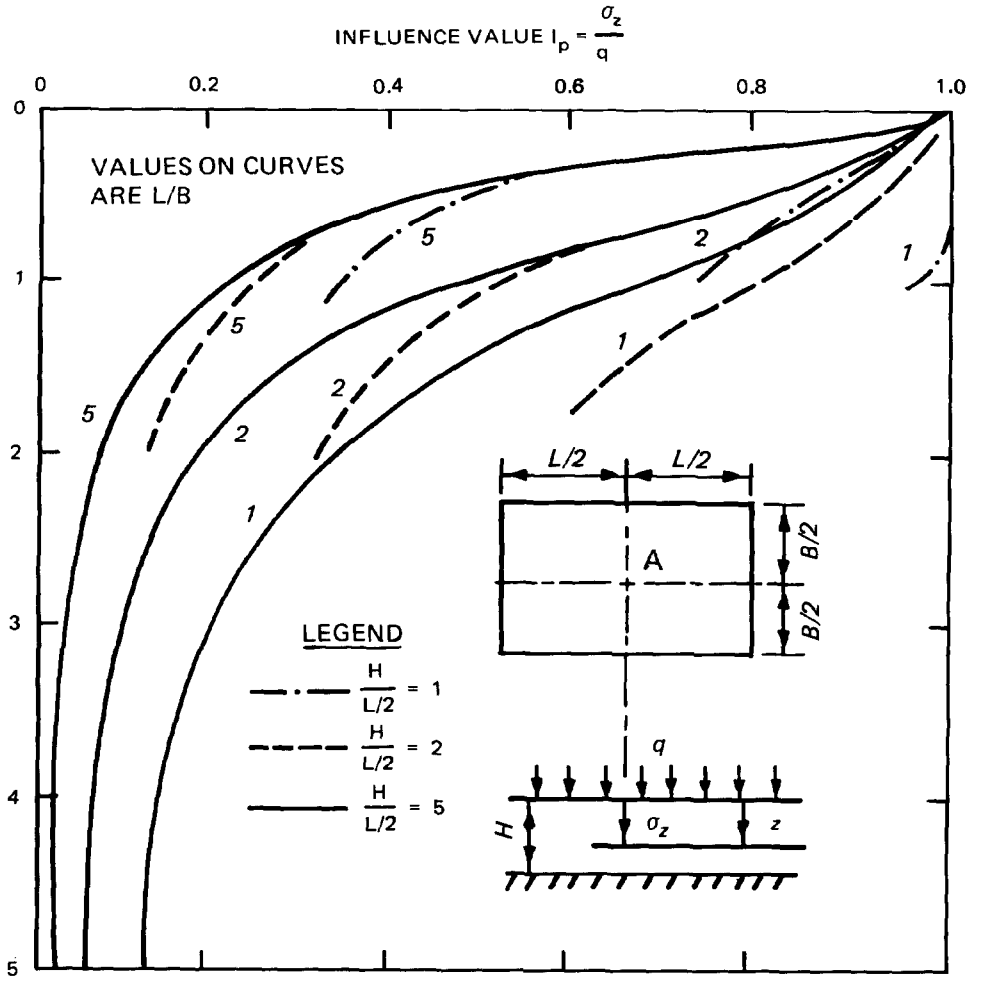

Figure 4-12. Influence value I_p for vertical stress σ_z at depth 2 below the center of a rectangular loaded area on a uniformly thick layer resting on a rigid base (item 73)

loadings, may then be calculated using vertical stress tables by Jumikis (item 41) or from appropriate charts given in textbooks. Stresses below surface can also be determined by using a suitable computer program, e.g. "Vertical Stresses Beneath Embankment and Footing Loadings," developed by US Army Engineer District, St. Paul, and available from WES.

(b) Settlement Computation. The clay stratum below the cell should be divided into several layers of smaller thicknesses. The stresses at the center of these layers should then be determined from the charts, tables, or by

computer, as discussed above. The settlement of each layer can be given as

$$\Delta H_1 = \frac{H_1 C_c}{1 + e_o} \log_{10} \frac{\sigma_o + \Delta\sigma}{\sigma_o}$$

where

ΔH_1 = settlement of layer of thickness, H_1

C_c = compression index determined from the e versus log σ' curve

e = void ratio at any effective stress, σ'

e_o = initial void ratio

σ_o = effective overburden pressure

$\Delta\sigma$ = stress increment at the center of the layer due to cell and berm fills

Total settlement of clay below cell is

$$\Delta H = \sum \frac{HC_c}{1 + e_o} \log_{10} \frac{\sigma_o + \Delta\sigma}{\sigma_o} \qquad [4\text{-}5]$$

(2) Settlement of Cofferdam on Sand. The settlement of a foundation on sand occurs at a a very rapid rate following application of the load. For a cellular cofferdam on sand, a large part of the settlement of the foundation soils would occur during placement of fill inside the cells. As discussed before, the estimate of the total and differential settlements of a cellular structure is very important to examine any possibility of damage due to such settlements. The settlement of a structure on granular soils can be calculated by the Schmertmann or Buisman method, as described below.

(a) Schmertmann Method. This method is generally suitable for computing settlement below a rigid foundation, where the settlement is approximately uniform across the width of the foundation. However, the Schmertmann method has earlier been successfully used by Davisson and Salley (item 21) to predict average settlements of flexible foundations. Hence, the average settlement of a cellular cofferdam on granular soils may be determined using this method. To calculate the central and edge settlements below the flexible bottom of the cofferdam, the Buisman method with necessary correction suggested by Schmertmann may be used, as described later. The Schmertmann method utilizes the static cone penetration test values to estimate the elastic modulus of the soil layers. The settlement is calculated by integrating the strains, shown as follows:

$$S = \int_0^{\infty} \varepsilon_z \, dz = \Delta\sigma \int_0^{\infty} \left(\frac{I_z}{E_s}\right) dz$$

[4-6]

$$= C_1 C_2 \Delta\sigma \sum_1^n \left(\frac{I_z}{E_s}\right) \Delta z$$

where

S = total settlement

C_1 = foundation embedment correction factor

C_2 = correction factor for creep settlement

$\Delta\sigma$ = net foundation pressure increase at the base of the cell

$= \sigma - \sigma_o'$

σ = stress due to fill load at the base of the cofferdam

σ_o' = effective overburden pressure at the base of the cofferdam

I_z = strain influence factor at the center of each sublayer with constant q versus depth diagrams are shown in Figure 4-13(a)

q_c = static cone penetration resistance

E_s = modulus of elasticity of any sublayer

Δz = thickness of the sublayer

As recommended by Schmertmann, Hartman, and Brown (item 64), the peak value of the strain influence factor

$$I_{z\sigma} = 0.5 + 0.1 \left(\frac{\Delta\sigma}{\sigma_{y\sigma}'}\right)^{1/2}$$

where

$\sigma_{y\sigma}'$ = effective overburden pressure at depth B/2 or B , as explained in Figure 4-13(b)

n = number of q_c sublayers to depth below footing which is equal to 2B (square or circular footing--axisymmetric case) or 4B (continuous footing--plane strain case).

B = equivalent width of the cofferdam, as explained before

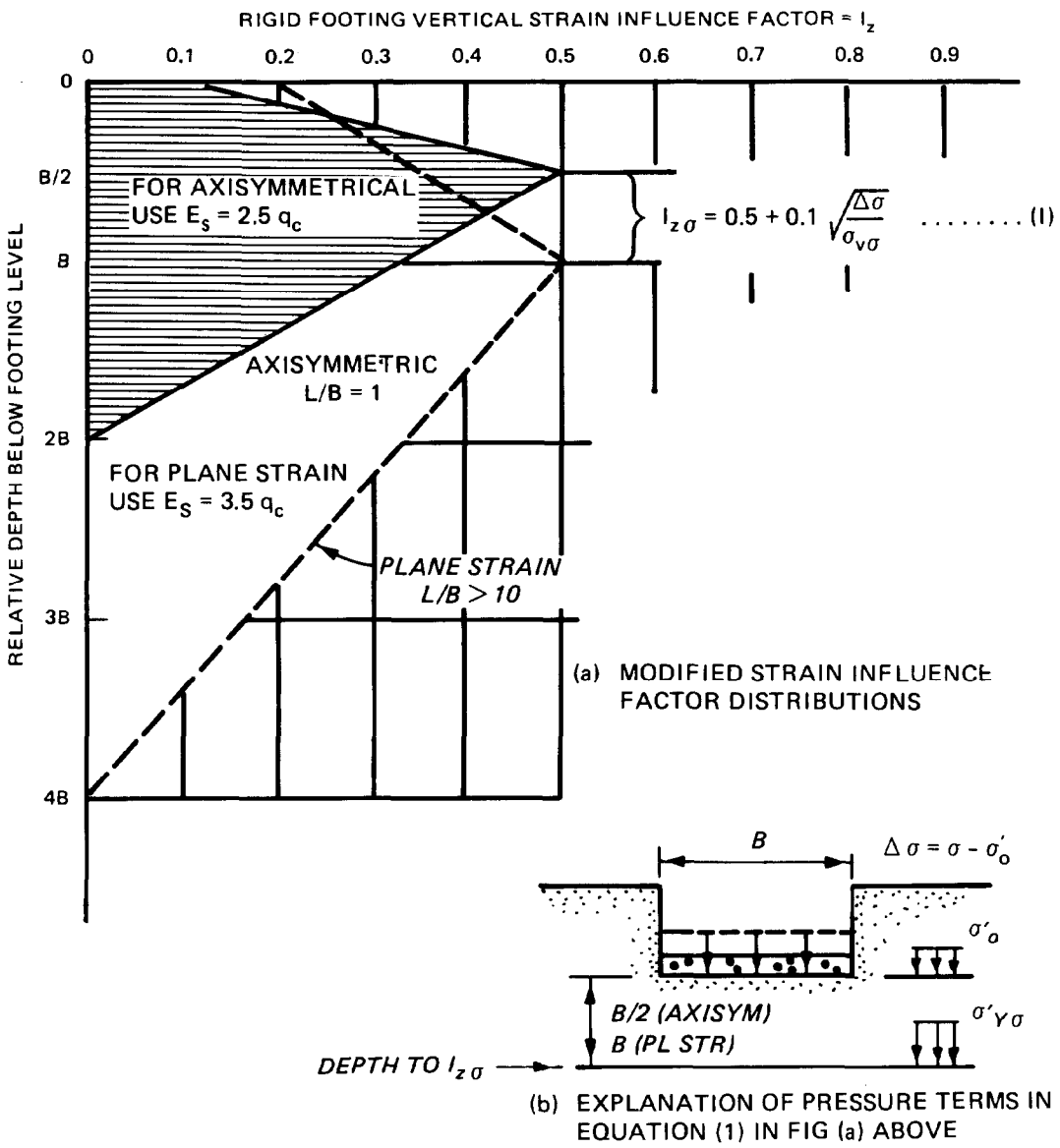

Figure 4-13. Recommended values for strain influence factor diagrams and matching E_s values (item 64)

The embedment correction factor

$$C_1 = 1 - 0.5\left(\frac{\sigma'_o}{\Delta\sigma}\right)$$

However, C_1 should equal or exceed 0.5. The correction for creep settlement

$$C_2 = 1 + 0.2 \log_{10}\left(\frac{t_{yr}}{0.1}\right)$$

where

t_{yr} = time in years from application of $\Delta\sigma$ on the foundation. The modulus of elasticity

$E_S = 2.5q_c$ for square or circular footing

and

$E_S = 3.5q_c$ for continuous footing

The following procedures should be adopted to compute settlement by the Schmertmann method:

- Obtain the static cone bearing capacity q_c for soils from the bottom of the cells to the significant depth which is equal to 2B for an axisymmetric case, or 4B for a plane strain case, e.g. for a cofferdam (L/B > 10), or to a boundary layer that can be assumed incompressible, whichever occurs first.

- Divide the soil depth, discussed above, into a succession of layers such that each layer has approximately a constant q_c .

- Superimpose the appropriate strain factor diagram shown in Figure 4-13 over the q_c - log discussed in step above. The strain influence factor diagram should be truncated at any rigid boundary layer if present within the significant depth discussed in step above. In this case, no vertical strains occur below this rigid boundary.

- Compute the total settlement, summing the settlements of individual layers using equation [4-6] and correcting for the embedment of the foundation and creep. In the expression for creep correction, C_2 , t_{yr} may be assumed as 5 years.

- For a cofferdam having 1 < L/B < 10 , the settlement should be computed for both axisymmetric and plane strain case, and then interpolated.

The settlement can also be calculated, but with somewhat reduced accuracy, using standard penetration test data (N) which should be converted to cone penetration resistance as suggested by Schmertmann (item 63). The ratios shown below are valid only for q_c values in tons per square foot.

Soil Type	q_c/N
Silts, sandy silts, slightly cohesive silt-sand mixture	2.0
Clean, fine to medium sands, and slightly silty sands	3.5
Coarse sand and sands with little gravel	5.0
Sandy gravel and gravel	6.0

(b) Buisman Method. As discussed before, the Schmertmann method is suitable for predicting settlement of a rigid foundation. The settlement computed by this method thus gives a somewhat average settlement of the cofferdam foundation which is essentially a flexible foundation. The Buisman method, like the Terzaghi method, determines settlement at any point within the soils below foundation. For the flexible foundation of the cofferdam, the stresses within the soils below the foundation can be determined using any of the suitable methods mentioned earlier for settlement on clay. The settlement of any granular stratum under these stresses can then be calculated using the Buisman expression:

$$\Delta H_1 = \frac{H_1}{C} \ln \frac{\sigma_o + \Delta\sigma}{\sigma_o}$$

where ΔH_1, H_1, σ_o, and $\Delta\sigma$ are same as explained in Schmertmann's method, and

$$C = \frac{1.5q_c}{\sigma_o}$$

Since the Buisman method highly overestimates the settlement, Schmertmann (item 63) suggested use of $2q_c$ instead of $1.5q_c$ as the elastic modulus of the soils in the above expression for C . Hence,

$$C = \frac{2q_c}{\sigma_o}$$

should be used to incorporate Schmertmann's correction in settlement calculation. Substituting this value of C in the settlement expression on the preceeding page

$$\Delta H_1 = \frac{H_1 \sigma_o}{2q_c} \times 2.303 \log_{10} \frac{\sigma_o + \Delta\sigma}{\sigma_o}$$

$$= \frac{1.151 \sigma_o H}{q_c} \times \log_{10} \frac{\sigma_o + \Delta\sigma}{\sigma_o}$$

Hence, total settlement at the point under consideration is given by

$$\Delta H = 1.151 \sum \frac{\sigma_o H}{q_c} \log_{10} \frac{\sigma_o + \Delta\sigma}{\sigma_o} \qquad [4\text{-}7]$$

This expression can be used to determine settlements at the center and the edges of the cofferdam to examine any possibility of the failure of the cofferdam due to excessive tilting under the loads of the cell fill, berm, or backfill.

c. Settlement Due to Dewatering of Cofferdam Area. Dewatering may cause drawdown of water levels within soil layers below existing structures or utility lines in the vicinity of the cofferdam area. This drawdown increases the effective weight of the soil layers previously submerged. Drawdown of water levels below the dredge level increases the effective stress in soils below the base of the cell. This increase in effective stress causes settlements of compressible soils underneath the structures within the drawdown zone (item 45). An estimate of these settlements is possible by using the methods discussed in paragraph 4-12b utilizing the drawdown depths to be determined by procedures described in Chapter 6.

4-13. Seepage Analysis. Generally two types of seepage are to be considered for designing a cellular cofferdam: seepage through the cell fill and foundation underseepage.

a. Seepage Through Cell Fill.

(1) The free water surface within the cell fill is to be estimated in order to check the stability of the assumed cell configuration. In general, the slope of the free water surface or saturation line may be assumed to be as shown in Figure 4-2. The effects on the saturation line during maximum pool, initial filling, and drawdown conditions have been discussed in paragraph 4-4. For simplifying seepage computations, a horizontal line may be chosen at an elevation representative of the average expected condition of saturation of the cell fill (item 86). However, adequate measures (e.g., providing weep holes and keeping free-draining quality of cell fill) should always be adopted to assure a reasonable low elevation of saturation.

(2) The zone of saturation within the cell fill is influenced by the following factors:

(a) Leakage of water into the cell through the outboard piles.

(b) Drainage of water from the cell through the inboard piles.

(c) Lower permeability than expected of the cell fill.

(d) Flood overtopping the outboard piles or wave splash.

(e) Possible leakage of water into the cell fill from any pipeline crossing the cells.

(3) Sometimes leakage through torn interlocks may occur if secondhand piles are used. For a permanent structure to retain high heads of water, new sheet piles in good condition should preferably be used (item 77).

(4) The hoop stresses due to cell fill are much smaller near the top than at the bottom of the cell. Hence, during the high flood period when the water rises near the top of the cell, water may leak into the cell through the top of the interlocks because of relaxation of the interlock joints. Therefore, the drainage facilities of the cell fill should always be well maintained.

(5) Floodgates should be provided such that the interior of the cofferdam can be flooded before the cells are overtopped by the rising water. Details of flooding the cofferdam are discussed in Chapter 6.

(6) Very hard driving in dense stratum or rock may open the sheet pile joints near the bottom of the cell causing leakage of water into the cell. If subsurface investigation indicates presence of such stratum, limitations regarding hard driving of sheet piles should be included in the contract specifications.

b. Foundation Underseepage. Cofferdams are primarily used for dewatering of construction areas and must sometimes withstand very high differential heads of water. If the cofferdam is supported on sand, seepage of water from the upstream to the downstream sides will occur through the sand stratum underneath the sheet piles due to the differential heads. Foundation problems, because of this seepage, have been discussed in EM 1110-2-2906 and various other publications (items 31, 52, and 81). Major problems associated with seepage below a sheet pile cellular structure are:

- Formation of pipe, boils, or heave of the soil mass in front of the toe because of the exit gradient exceeding the critical hydraulic gradient. Boils and heave will considerably lower the bearing capacity of the soil resulting in toe failure of the cell. Piping causes loss of materials underneath the cell foundation and may cause excessive settlement and eventual sinking of the cell.

- Upward seepage forces at the toe may excessively reduce the passive resistance of the soil. This loss of lateral resistance may cause sliding failure of the cell.

- Seepage forces acting on the soils at the inboard face of the cell may increase the hoop stress excessively in the sheet piles (item 46). This may increase the possibility of interlock failure of the sheet piles and result in the loss of cell fill.

(1) Studies of seepage by flow nets. The possibilities of different types of failures due to seepage through granular soils can be studied by flow net analysis. The quantity by seepage into the excavation can also be computed from the flow net. This can be used in designing pumping requirements to maintain a dry construction area. A typical flow net under a cell on sand is shown in Figure 4-14. The permeability of sand can be determined by field method (e.g., pumping test) or indirect method (e.g., grain size distribution curves) (EM 1110-2-1901 and item 79). The flow net below the cell can be constructed using a graphical, trial sketching method, generally called the Forchheimer solution (item 79). For anisotropic soil conditions the flow net must be drawn on a transformed section which can be used to determine the quantity of seepage. However, to determine magnitude and direction of seepage forces this transformed section should be reconstructed on the natural section (item 16).

(2) Seepage Quantity. The quantity of seepage can easily be determined once the flow net is available. The total number of flow channels and the total number of equipotential drops along each channel can be counted on any flow net. These numbers are N_f and N_p, respectively. If h is the head causing flow (Figure 4-14), then the quantity of seepage under the unit length of the cofferdam in unit time can be given by

$$Q = \frac{N_f}{N_p} kh \qquad [4\text{-}8]$$

where k is the coefficient of permeability which can be determined by the pumping test or the indirect method mentioned before.

(3) Heaving and Boiling. The average hydraulic gradient for any element, such as an element e in Figure 4-14, can be determined by the equation

$$i = \frac{\Delta h}{\Delta L}$$

where Δh is the head loss between the two potential boundaries of the square element and ΔL is the average length of the flow path between these boundaries. For the element e which is at the discharge face, the gradient is termed as the exit gradient or the escape gradient. The seepage force F acting on a volume V of an element is given by

$$F = i\gamma_w V \qquad [4\text{-}9]$$

where γ_w is the unit weight of the water. The direction of this force is approximately along the average direction of flow through the element. Heaving and subsequent piping failures can be expected to occur at the downstream side when the uplift forces of seepage exceed the downward forces due to the submerged weight of the soil. For sand, the submerged unit weight is very close to the unit weight of water. Hence, at the point of heaving, from equation [4-8], the hydraulic gradient becomes approximately equal to 1. This hydraulic gradient is termed as "critical hydraulic gradient i_c." For clean sand, exit gradients between 0.5 and 0.75 will cause unstable conditions for men and equipment (item 52). To provide security against piping failures, exit gradients should not exceed 0.30 to 0.40. High values of the hydraulic gradient near the toe of the cell greatly reduce the effective weight of the sand near the toe and decrease the passive resistance of the soils. This will increase the possibility of sliding failures of cofferdams.

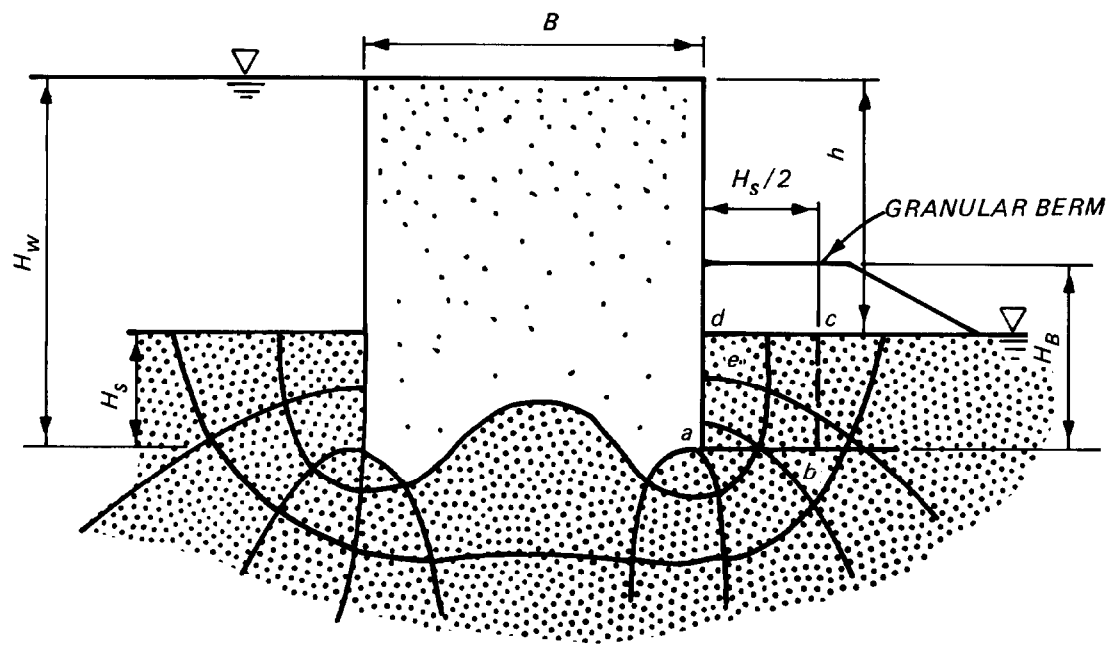

Figure 4-14. Partial flow net beneath a cell on sand

(4) Factor of Safety Against Piping Failure. It was observed from model tests that the heaving due to piping failure extends laterally from the downstream sheet pile surface to a distance equal to half the depth of sheet pile penetration (item 82). Figure 4-14 shows the prism 'abcd' subjected to seepage force causing piping failure. The distribution of the excess hydrostatic pressure at the base of the prism can be calculated from the flow net. If U is the excess hydrostatic force acting per unit length of the prism, then the FS against piping can be given by

$$FS = \frac{W'}{U} \qquad [4\text{-}10]$$

where W' is the submerged weight of the prism of unit length. To avoid any unstable condition of the downstream surface, a FS of at least 1.5 should be provided against piping failure. If the FS is less, adequate seepage control as discussed below should be done.

c. Control of Seepage. The following methods may be adopted to prevent seepage problems:

(1) Penetration of Sheet Piles to Deeper Levels. The penetration of sheet piles deep into the sand stratum below the dredgeline will increase the length of the percolation path that the water must travel to flow from the upper to the lower pool under the cofferdam (EM 1110-2-2906, items 52, 81, and. 94). The exit gradient to be determined from the new flow net can be lowered to an acceptable value of 0.3 to 0.4, as discussed before, by adequately increasing the penetration depth of the sheet piles. The excess hydrostatic force U acting on prism abcd (Figure 4-14) will also be reduced to yield a higher value of the FS as given by equation [4-10]. Terzaghi recommends a penetration depth equal to (2/3)H to reduce hydraulic gradients at critical locations, where H is the upstream head of water. However, critical hydraulic gradients should always be checked by actual flow net analysis.

(2) Providing Berm on the Downstream Surface. Deeper penetration of sheet piles in some cases may be uneconomical and impractical. A pervious berm can then be used on the downstream side to increase the FS against piping failures. The berm being more permeable than the protected soil will not have any influence on the flow net, but will counteract the vertical component of the seepage force. If the added weight of this berm acting as inverted filter is W , then the new FS according to equation [4-10] will be

$$FS = \frac{W + W'}{U}$$

(3) Increasing the Width of Cofferdam. The equivalent width of the cofferdam can be increased by using larger diameter cells. This will increase the percolation path of water under the cell from the outboard to the inboard sides. Adequate design may completely eliminate the necessity of berm on the downstream side. This may be very convenient for construction but is very expensive.

(4) Installation of Pressure Relief Systems. The exit gradient can also be reduced using adequate pressure relief systems that will lower the artesian head below the bottom of excavation to control upward seepage force (item 48). The relief wells act as controlled artificial springs that prevent boiling of soil (EM 1110-2-1905). If the discharge required to produce head reduction is not excessive, a wellpoint system can be effectively used. To relieve excess hydrostatic pressure in deep strata, a deep well system can be used. The well

can be pumped individually by turbine pumps or connected to a collector pipe with a centrifugal wellpoint pump system. Details of design of the relief well system have been discussed by Mansur and Kaufman and in EM 1110-2-1905. Details of dewatering are also included in Chapter 6 of this manual.

4-14. Internal Cell Stability.

a. Pile Interlock Tension. A cell must be stable against bursting pressure, i.e., the pressure exerted against the sheets by the fill inside the cell must not exceed the allowable interlock tension. The FS against excessive interlock tension is defined as the ratio of the interlock strength as guaranteed by the manufacturer to the maximum computed interlock tension. The interlock tension developed in a cell is a function of the internal cell pressure. The internal horizontal pressure p at any depth in the cell fill is the sum of the earth and water pressures. The earth pressure is equal to the effective weight of the cell fill above that depth times the coefficient of horizontal earth pressure K . This coefficient should ideally vary with the loading condition and the location within the cell; however, the actual variation is erratic and impossible to predict. It is recommended that a coefficient in the range of $1.2K_a$ to $1.6K_a$ is the coefficient of active earth pressure. The coefficient is dependent upon the type of cell fill material and the method of placement. See Table 4-2 for recommended values.

Table 4-2

Coefficients of Internal Pressure

Method of Placement	Type of Material				
	Crushed Stone	Coarse Sand and Gravel	Fine Sand	Silty Sand and Gravel	Clayey Sand and Gravel
Hydraulic dredge	$1.4K_a$		$1.5K_a$		$1.6K_a$
Placed dry and sluiced		$1.4K_a$		$1.5K_a$	
Wet clammed	$1.3K_a$		$1.4K_a$		$1.5K_a$
Dry material placed in dry		$1.3K_a$		$1.4K_a$	
Dumped through water	$1.2K_a$		$1.3K_a$		$1.4K_a$

Interlock tension is also proportional to the radius of the cell. The maximum interlock tension in the main cell is given by

$$t = pr$$

where

p = maximum inboard sheeting pressure

r = radius

The interlock tension at the connections between the main cells and the connecting arcs is increased due to the pull of the connecting arcs, as illustrated in Figure 4-15, and can be approximated by

$$t_{max} = pL \sec$$

where

t_{max} = interlock tension at connection

p = as previously defined

L = as shown in Figure 4-15

It must be emphasized that the above equation is an approximation since it does not take into account the bending stresses in the connection sheet pile produced by the tensile force in the sheet piles of the adjacent cell. Consequently, for critical structures, special analyses such as finite element should be used to determine interlock tension at the connections. In computing the maximum interlock tension, the location of the maximum unit horizontal

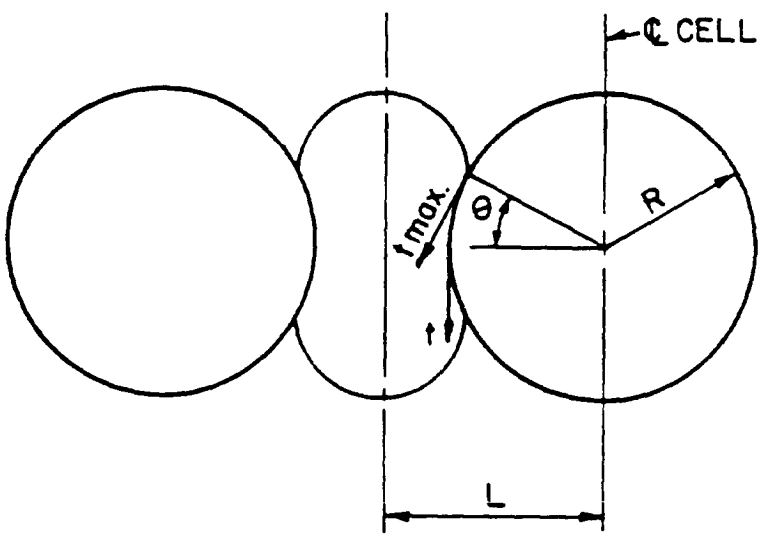

Figure 4-15. Interlock stress at connection

pressure p should be assumed to occur at a point one fourth of the height of the cell above the level at which cell expansion is fully restrained. Full restraint can be assumed to be where the external passive forces, due to overburden or a berm, and hydrostatic forces equal the internal cell pressures. In this case, it is generally sufficiently accurate and conservative to assume the point of maximum pressure to be at the top of the overburden or berm. When there is no overburden or berm, full restraint can be assumed to be at top of rock if the piling is seated on and bites into the rock. Maximum pressure should be assumed to occur at the base of cells which are neither seated in rock nor fully restrained by overburden or berm. See Figure 4-16 for typical pressure distributions. As stated previously, future changes in the depth of overburden, removal of berms, changes in saturation level in the cell fill, rate of dewatering, etc., must be anticipated when determining the maximum interlock tension.

b. Interlock Tension. In order to minimize interlock tension, the following details should be considered:

(1) Adequate weep holes should be provided on the interior sides of the cells in cofferdams to reduce the degree of saturation of the cell fill. The weep holes should be adequately maintained during the life of the cofferdam.

(2) Interlock tension failure has often occurred immediately after filling of the cells and can usually be traced to driving the sheets out of interlock. This results from driving through excessive overburden or striking boulders in the overburden. Overburden through which the piling must be driven should be limited to 30 feet. If the overburden exceeds this depth, consideration should be given to removing the excess prior to pile driving. The degree to which boulders may interfere with watertightness and driving of the cells can be estimated after a complete foundation exploration program.

(3) In an effort to reduce the effect of the connecting arc pull on the main cells, wye connectors are preferable to tees since the radial component of the pull on the outstanding leg is less for arcs of equal radius.

(4) Pull on the outstanding leg of connector piles can be reduced by keeping the radius of the connecting arc as small as practicable. The arc radius should not exceed one half of the radius of the main cell.

(5) Since tees and wyes are subjected to high local bending stresses at the connection, strong ductile connections are essential. Welded connections do not always meet this requirement because neither the steel nor the fabrication procedure is controlled for weldability. Therefore all fabricated tees, wyes, and cross pieces shall utilize riveted connections. In addition, the piling section from which such connections are fabricated shall have a minimum web thickness of one-half inch.

(6) Only straight web pile sections shall be used for cells as the hoop-tension forces would tend to straighten arch webs, thus creating high bending stresses.

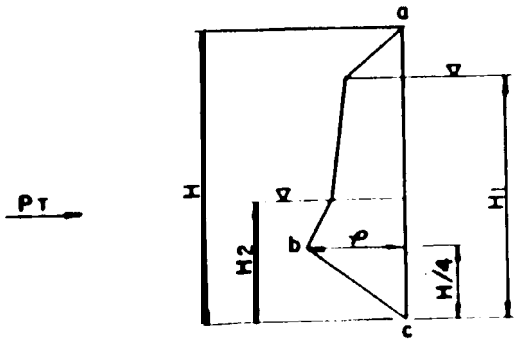

H1 = AVERAGE HEIGHT OF SATURATION LINE

H2 = HEIGHT OF SATURATION LINE AT INBOARD FACE

FIG. 4-16a PILING SEATED ON ROCK, NO OVERBURDEN OR BERM, p max @ H/4

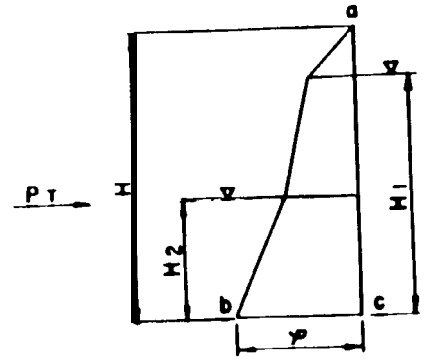

FIG 4-16c PILING NOT SEATED IN ROCK, p max @ BASE OF CELL. PILING NOT FULLY RESTRAINED BY BERM OR OVERBURDEN, p max @ TOP OF BERM OR OVERBURDEN

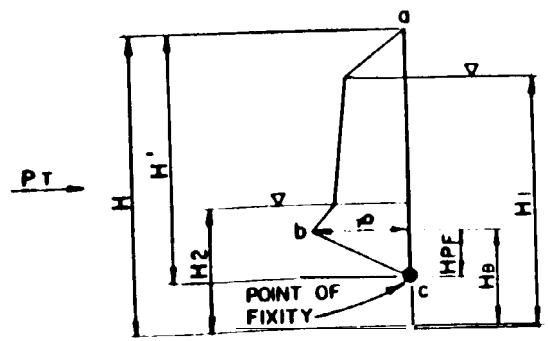

HB = HEIGHT OF BERM OR OVERBURDEN

HPF = DISTANCE FROM TOP OF BERM OR OVERBURDEN TO POINT OF FIXITY

H' = HEIGHT OF CELL ABOVE POINT OF FIXITY

FIG 4-16b PILING FULLY RESTRAINED BY EXTERNAL PASSIVE AND HYDROSTATIC FORCES, p max @ H'/4 OR TOP OF BERM OR OVERBURDEN

Figure 4-16. Resultant interlock pressure and point of maximum horizontal pressure

(7) Used piling is often utilized with little regard to the manufacturer. Because of small differences in interlock configuration and dimensional tolerances, sheets from different manufacturers may not be compatible and may not develop the assumed interlock strength. Splices have been made without considering the dimensions of the sheets joined. Splicing two sheets that do not have exactly the same width can cause a stress concentration in the narrower sheet. Where previously used piling is employed, care should be taken to ensure that the sheets are gaged and will interlock and that the sheets are compatible for splicing.

c. Shear Failure Within the Cell (Resistance to Tilting). Tilting of cofferdam cells is resisted by both the vertical and horizontal shear resistance of the soil in the cell, to which the frictional resistance of the steel sheet piling is added. Vertical shear resistance is determined by the theory developed by Terzaghi (item 81). The horizontal shear resistance is determined by the theory proposed by Cummings (item 19). Both of these methods of analysis should be used independently to determine the adequacy of the cell to resist tilting. Additionally, tilting resistance of cells founded in overburden should be investigated by the theory proposed by Schroeder and Maitland (item 66).

(1) Vertical Shear Resistance. Excessive shear on a vertical plane through the center line of the cell is a possible mode of failure by tilting. For stability, the shearing resistance along this plane, together with the frictional resistance in the interlocks, must be equal to or greater than the shear due to the overturning forces. The frictional resistance in the interlocks must be included since shear failure cannot occur without simultaneous slippage in the interlocks. Figure 4-17a shows the assumed stress distribution on the base due to the net overturning moment. The total shearing force on the neutral plane at the center line of the cell is equal to the area of the triangle. Therefore

$$Q = \left(\frac{1}{2}\right)\left(\frac{B}{2}\right)\left(\frac{6M}{B^2}\right) = \frac{3M}{2B}$$

where

Q = total shearing force

M = net overturning moment

To prevent rupture, the shear resistance on the neutral plane must be equal to the shearing force Q on this plane. The shear resistance on the neutral plane is due to the lateral pressure of the cell fill and is equal to this pressure times the coefficient of internal friction of the cell fill. Thus, as illustrated in Figure 4-17b

$$Ps = \frac{1}{2}\gamma K(H - H_1)^2 + \gamma K(H - H_1)\,H_1 + \frac{1}{2}\gamma K H_1^2$$

where

Ps = total lateral pressure, per unit length of cofferdam, due to cell fill

= unit weight of cell fill above saturation line

= submerged unit weight of cell fill

$K = \frac{\cos^2 \phi}{2 - \cos^2 \phi}$, empirical coefficient of earth pressure as suggested by Kryine

ϕ = angle of internal friction of cell fill

The total center-line shear resistance per unit length of cofferdam is

$$Ss = Ps \tan \phi$$

where

Ss = total vertical shear resistance

$\tan \phi$ = coefficient of internal friction of cell fill

The frictional resistance in the sheet pile interlock is equal to the interlock tension times the coefficient of friction of steel on steel. The resistance against slippage per unit length is therefore

$$S_F = fP_T$$

where

S_F = frictional resistance against slippage

f = coefficient of friction of steel on steel at the interlock = 0.3

P_T = resultant interlock pressure (area abc on Figure 4-16)

The total shearing resistance S_T along the center line of the cell is then

$$S_T = Ss + S_F = Ps \tan \phi + fP_T$$

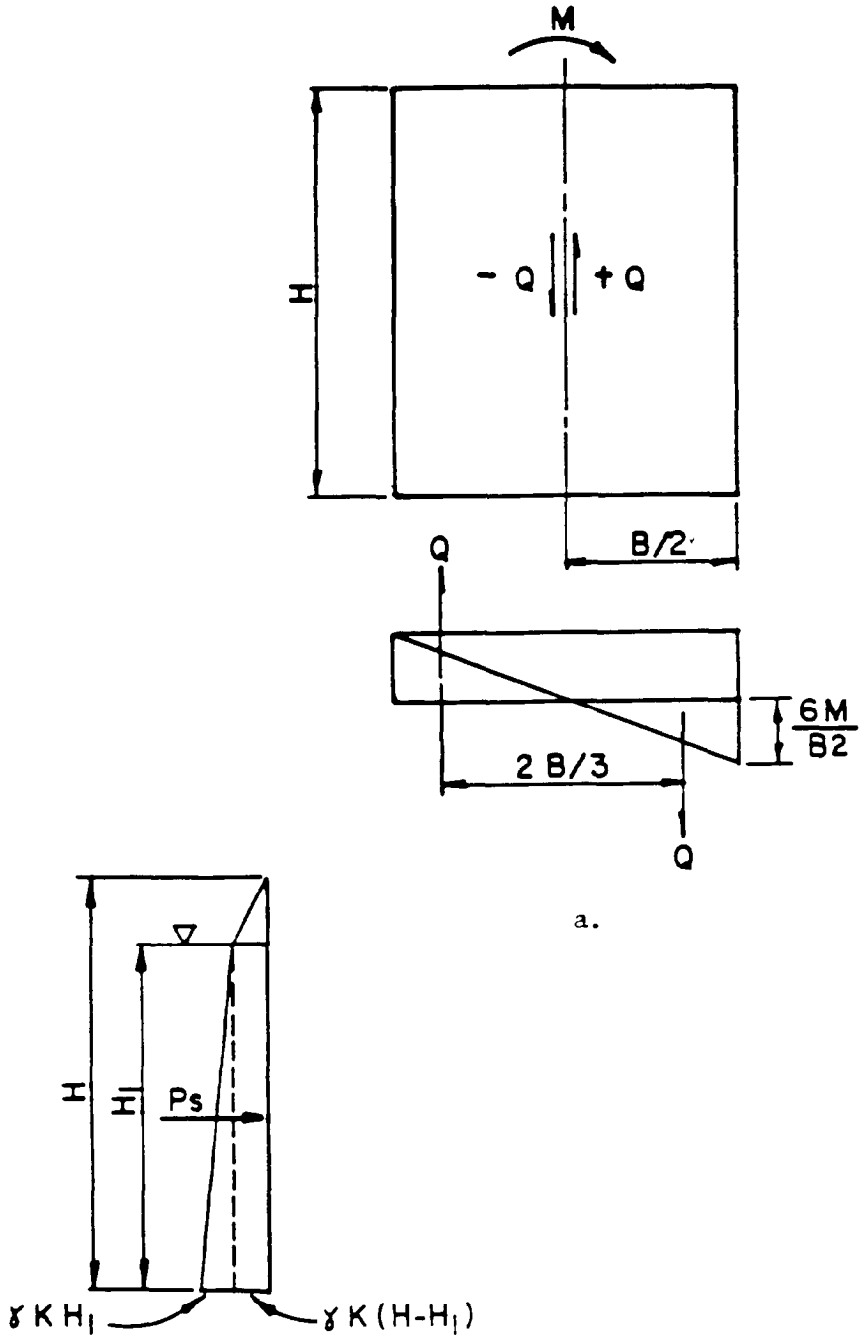

Figure 4-17. Vertical shear resistance, Terzaghi method

and the FS against tilting by vertical shear is thus

$$= \frac{S_T}{Q} = \frac{(Ps \tan \phi + fP_T)2B}{3M}$$

The foregoing is applicable to cells founded on rock, sand, or stiff clay. The determination of P_T is dependent upon whether the piling is seated on rock, the presence of a berm or overburden, and the degree of restraint provided thereby, as discussed previously. In the case of cells on soft to medium clay, a relatively small overturning moment will produce an unequal distribution of pressure on the base of the fill in the cell causing it to tilt. The stability of the cell is virtually independent of the strength of the cell fill since the shear resistance through vertical sections offered by the cell fill cannot be mobilized without overstressing the interlocks. Therefore, for cells on compressible soils, the shear resistance of the fill in the cells is neglected, and the factor of safety against a vertical shear failure is based on the moment resistance mobilized by interlock friction as follows:

$$FS = \frac{PRf\left(\frac{B}{L}\right)\left(\frac{L + 0.25B}{L + 0.50B}\right)}{M}$$

where

P = pressure difference on the inboard sheeting

R = radius

f = coefficient of interlock friction

B and L = as shown in Figure 4-1

M = net overturning moment

(2) Horizontal Shear Resistance. The stability of a cell against failure by tilting is also dependent on the horizontal shear resistance of the cell fill and on the resisting moment due to the frictional resistance of the pile interlock. This theory, as proposed by Cummings (item 19), is based on the premise that the cell fill will resist lateral distortion of the cell through the buildup of soil resistance to sliding on horizontal planes. This resistance will be developed in a triangle forming an angle ϕ to the horizontal as shown in Figure 4-18a. The triangle of soil will be in a passive pressure state and will be surcharged by the overlying fill. The magnitude of the resisting force F is

$$F = \gamma HB \tan \phi$$

where

$H = a + c$

$B = c/\tan \phi$

therefore

$$F = ac\gamma + c^2\gamma$$

The lateral force F is represented graphically by Figure 4-18b, the area of this diagram being equal to F . The total moment of resistance M_r about the base of the cell is

$$M_r = F_1\left(\frac{c}{2}\right) + F_2\left(\frac{c}{3}\right)$$

where

$F_1 = ac\gamma$

$F_2 = c^2\gamma$

therefore

$$M_r = \frac{ac^2\gamma}{2} + \frac{c^3\gamma}{3}$$

Interlock friction also provides shear resistance equal to the maximum interlock tension times the coefficient of interlock friction, with the maximum interlock tension being determined in accordance with the criteria set forth in paragraph 4-14a. Thus, the resisting moment M_f against tilting due to interlock tension is

$$M_f = P_T\ fB$$

where

P_T = area abc as shown in Figure 4-16

B and f = as previously defined

The FS against tilting due to horizontal shear is defined as

$$FS = \frac{M_r + M_f}{M_o}$$

where M_o = driving moment. Excessive tilting results from the use of weak cell fill; therefore, the fill should be well graded and free draining to the maximum extent possible. Further, since the shear resistance of the cell is

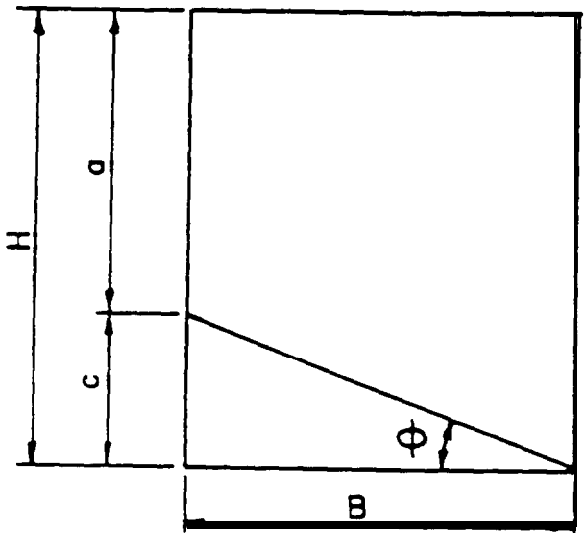

a.

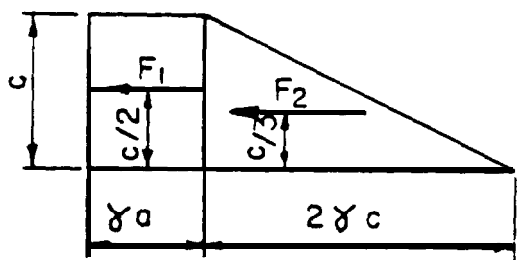

b.

Figure 4-18. Horizontal shear resistance, Cummings method

derived from the material in the lower portion of the cell, it may be necessary to excavate any weak material encountered in the overburden. Should the shear resistance of the cell fill material be inadequate to withstand the external forces, consideration should be given to the use of a berm to assist in stabilization of the cell. If a berm is used, the resisting moment due to the effective passive pressure of the berm should be included. Thus, the FS against tilting due to horizontal shear is

$$FS = \frac{M_r + M_f + P_R(H_B/3)}{M_o}$$

All variables are as previously defined.

(3) Vertical shear resistance (Schroeder-Maitland method, item 66). This design approach is a variation of the Terzaghi method of vertical shear resistance (see paragraph 4-14c(l)). It is particularly applicable to cells founded on sand or stiff to hard clay. The main premises, as determined from field and laboratory studies, are: the coefficient of lateral earth pressure K should be taken as 1 as a result of the compression the cell fill undergoes during the application of the overturning force; and the height of the cell over which vertical shear resistance is applied should extend from the top of the sheet piles on the cell center line to the point of fixity for the embedded portion of the sheets. Thus, as illustrated in Figure 4-19:

$$S_T = \frac{1}{2} \gamma K (H')^2 (\tan \phi + f)$$

where

S_T = total shearing resistance along the center line of the cell

K = coefficient of lateral earth pressure = 1.0

H' = height of cell over which vertical shear resistance is applied

γ, ϕ, and f = as previously defined

The point of fixity and the required depth of embedment, as determined by Matlock and Reese (item 58) for laterally loaded embedded piles, is 3.1T and >5T, respectively, where

$$T = \sqrt[5]{\frac{EI}{n_h}}$$

where

E = modulus of elasticity of the pile

I = moment of inertia of the pile

n_h = constant of horizontal subgrade reaction

Application of this method has the effect of satisfying the FS requirement against vertical shear failure with a smaller diameter cell than that required by the Terzaghi method. In installations where seepage resulting from an unbalanced head is not a critical consideration, i.e., a bulkhead installation as opposed to a cofferdam, the depth of embedment of the piling should be that required to provide passive resistance to translational failure rather than D = 2H/3 as recommended by Terzaghi. Sheet pile cells are flexible structures with a plane of fixity only a short distance below the dredgeline. In

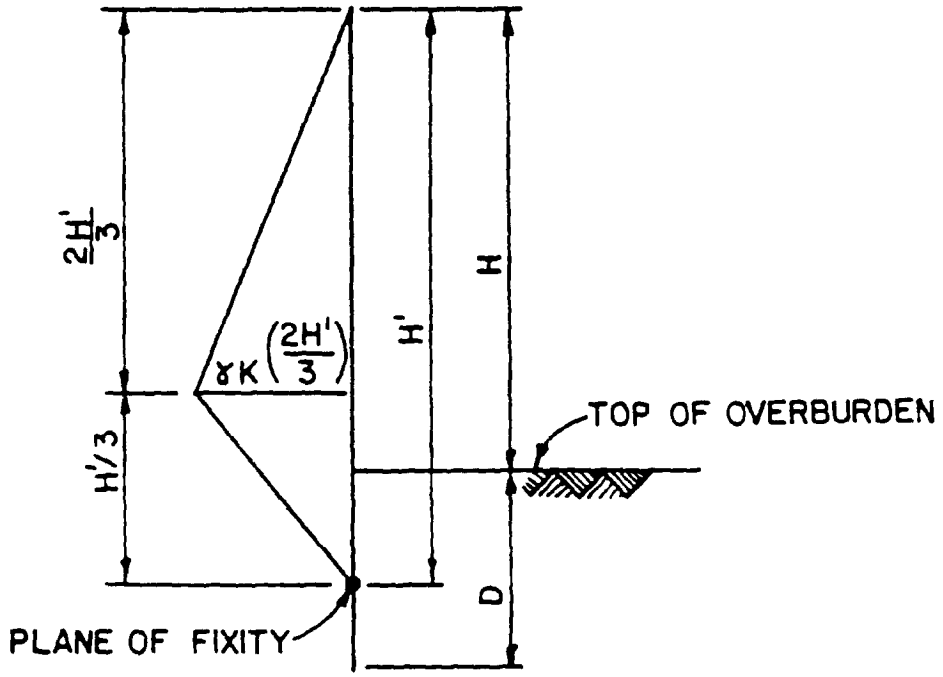

VERTICAL PLANE ON CENTER LINE OF CELL

Figure 4-19. Vertical shear resistance Schroeder-Maitland method (item 66)

determining the depth of embedment, the plane of fixity should be determined by the analytical methods noted previously and the passive resistance available be calculated above this plane.

d. Pullout of Outboard Sheets. The depth of embedment of sheet piling is generally determined by the need to control seepage by increasing the flow path. However, the penetration must be sufficient to ensure stability with respect to pullout of the outboard piling due to tilting. The calculated overturning moments are applied to the sheet piles which are assumed to act as a rigid shell. Resistance to pullout is computed as the frictional or cohesive forces acting on the embedded length of piling. Thus

$$FS = \frac{Q_u}{Q_p}$$

where

Q_u = ultimate pullout capacity per linear foot of wall

Q_u clay = (Ca) (perimeter) (embedded length D)

Ca = adhesion

perimeter = interior and exterior surfaces of a l-foot-wide strip, i.e., 1 x 2 = 2 feet

D = embedded length

Q_u granular = $(1/2\ Ka\ \gamma e\ D^2\ \tan\delta)$ (perimeter)

Ka = coefficient of active earth pressure by Coulomb

γe = effective unit weight of underlying soil

$\tan\delta$ = coefficient of friction for steel against underlying soil. See Table 4-3 for recommended values.

Q_p = average pile reaction due to overturning moment on outboard piling = $\frac{P_w H_w + P_a H_s - P_R H_B}{3B(1 + B/4L)}$, where all variables are as shown in Figure 4-5.

Table 4-3

Wall Friction

Steel Sheet Piles Against the Following Soils	tan δ
Clean gravel, gravel-sand mixtures, well-graded rock fill with spalls	0.40
Clean sand, silty sand-gravel mixture, single size hard rock	0.30
Silty sand, gravel or sand mixed with silt or clay	0.25
Fine sandy silt, nonplastic silt	0.20

e. Penetration of Inboard Sheets. The penetration of the sheet piles on the inboard side must be sufficient to prevent further penetration. The FS against sheet pile penetration is defined as the ratio of the shear resistance on both sides of the embedded portion of the piles on the unloaded side to the internal downward shear force on the unloaded side as follows:

$$FS = \frac{F_1}{M} (D)$$

where

$F_1 = P_T \tan \delta$

p_T = area abc as shown in Figure 4-16

$\tan \delta$ = coefficient of friction between steel sheet piling and cell fill

M = net overturning moment

D = embedded length

Section IV. Design Criteria

4-15. Factors of Safety. The required FS for the various potential failure modes described in paragraph 4-4 are listed in Table 4-4. As previously stated in Chapter 1 cofferdams are not classified as temporary structures, nor are the loads imposed upon them generally considered temporary as far as FS's are concerned. However, some loading conditions can be classed as temporary where failure would not result in loss of life, severe property damage, or loss of the navigation pool, e.g., initial dewatering of a cofferdam which does not maintain a navigation pool.

4-16. Steel Sheet Piling Specifications. Steel for sheet piling should conform to the requirements of the following American Society for Testing and Materials (ASTM) standards (item 4):

A328 Steel Sheet Piling

A572 High-Strength Low-Alloy Columbium Vanadium Steels of Structural Quality

A690 High-Strength Low-Alloy Steel H-Piles and Sheet Piling for Use in Marine Environments

A328 is the basic sheet piling specification and is satisfactory for most installations. A572 specifies high-strength sheet piling and is applicable for use in large diameter (>70 feet) cells where high interlock strength is required. A690 steel sheet piling provides greater corrosion resistance than other steels and should be considered for use in permanent structures in corrosive environments. The mechanical properties of the steel sheet pile grades are shown in Table 4-5. Cold-formed steel sheet piling is also available. Presently, there is no ASTM specification covering this piling. Although this piling has limited applicability, it may be used subject to the approval of Headquarters, US Army Corps of Engineers (CEEC-ED). An extruded

Table 4-4

Design Criteria--Factors of Safety

Required Factor of Safety			
	Loading Condition		
Failure Mode	Normal	Temporary	Seismic
Sliding[1]	1.5	1.5	1.3
Overturning (gravity block)[1,2]	Inside Kern	Inside Kern	Inside Base
Rotation (Hansen)[2]	1.5	1.25	1.1
Deep seated sliding	1.5	1.5	1.3
Bearing capacity			
Sand	2.0	2.0	1.3
Clay	3.0	3.0	1.5
Seepage control			
Interlock tension[3]	2.0	1.5	1.3
Vertical shear resistance (Terzaghi)	1.5	1.25	1.1
Horizontal shear resistance (Cummings)	1.5	1.25	1.1
Vertical shear resistance (Schroeder-Maitland)[2]	1.5	1.25	1.1
Pullout of outboard sheets[2]	1.5	1.25	1.1
Penetration of inboard[2] sheets	1.5	1.25	1.1

Notes

1. These FS's/criteria are for cofferdams only. Refer to the appropriate engineer manual for the required FS for other installations or applications.

2. Design should not be based on these modes of failure, but rather these analyses should be employed as sensitivity checks only.

3. The FS against interlock tension failure should be applied to the interlock strength value guaranteed by the manufacturer for the particular grade of steel. The guaranteed value for used piling should be reduced as necessary depending upon the condition of the piling.

Table 4-5

Mechanical Properties

ASTM Grade	Minimum Yield Point, psi	Minimum Tensile Strength, psi	Interlock Strength, p1i.[1]
A328	38,500	70,000	16,000
A572(Gr. 50)	50,000	65,000	28,000
A690	50,000	70,000	28,000

Note

1. As guaranteed by the manufacturer.

wye, using A572, Grade 50 steel, is available on a limited basis. These wyes have a small cross section and are extremely flexible, thus creating handling and driving difficulties. As a result of this characteristic, together with their limited availability, the use of extruded wyes is not recommended.

4-17. Corrosion Mitigation. Permanent sheet pile structures located in polluted, brackish, or salt water should be protected against corrosion. A690 steel sheet piling, which offers greater corrosion resistance than A328 piling, should be considered for corrosive environments. A328 steel sheet piling with a protective coating in the splash zone, such as a coal-tar epoxy, should also be considered. For maximum protection, coatings can be applied to A690 piling.

Section V. Finite Element Method (FEM) for Analysis and Design

4-18. Background. The application of FEM analysis to date has been to develop its state of the art to the point where it can be used to refine existing design techniques and to analyze potential failure modes which cannot be checked by other methods. All studies so far have been made by researchers or engineers who are extremely familiar with the FEM techniques using specialized FEM programs for soil and structure modeling. The FEM analysis does not yet lend itself to application by typical design engineers working with currently available general-use programs. Due to FEM techniques currently being used for research applications, the information provided by this section will be limited to a review of available literature and methods used for analysis. Relatively little has been published concerning finite element analyses of cellular cofferdam structures. Kittisatra (item 42) was one of the first to apply FEM to cellular cofferdams by using a linear elastic axisymmetric model. Clough and Hansen (item 18) were the first to utilize FEM soil-structure interaction techniques in the analyses of cellular cofferdams. They developed a vertical slice model which was used to analyze the US Army Corps of Engineers Willow Island Cofferdam. Later, Dr. Clough used this model along with two others, axisymmetric and horizontal slice models, to analyze the US Army

Corps of Engineers Lock and Dam No. 26 (Replacement) for Shannon and Wilson, Inc. (item 69).

4-19. Finite Element Cofferdam Models. Due to the difficulty of early investigations to define exactly the forces involved with interaction between sheet piles, soils, and the foundation, empirical methods for design of cellular cofferdams have been adopted over the years. Recent studies of the finite element method have shown that two dimensional models of a circular cell cofferdam can, with a few basic assumptions, fairly accurately determine interactive forces between cell elements. A finite element program must contain four special capabilities: nonlinear stress-strain material behavior, slip elements, construction simulation, and orthotropic shell response. Soils are known to have a complex stress-strain response. The stress-strain behavior of a sand is characterized by a family of nonlinear curves in loading and a second family of essentially linear responses in unloading-reloading which depends upon the confining stress level. Currently only one set of variations of the finite element program "Soil-Struct," developed by Dr. Wayne Clough, contains all of the special capabilities needed for soil-cofferdam interaction modeling. This program is described in item 69. Three types of finite element models have been performed on cellular cofferdams as described below:

a. Vertical Slice Analysis. The first and most common model is a "Vertical Slice" analysis through the center of a circular cell from upstream to downstream side. This model has been used with good results by Dr. Clough for Shannon and Wilson, Inc. to simulate analysis of all stages and construction for cells resting on soil. A vertical slice model was also used in the report on Willow Island Cofferdam by Clough and Hansen (item 18), in which cells founded on rock with an underlying soft clay seam are analyzed. Figures 4-20 and 4-21 show this particular finite element model.

b. Axisymmetric Cell Analysis. The second model type is a vertical slice cut through the cell from center line out called an "Axisymmetric Model," shown in Figures 4-22 and 4-23. This analysis technique computes stresses and deflections of the sheet piling, cell fill, and foundation during cell filling. This model is not useful for other construction steps due to the assumption of axisymmetric loading. Axisymmetric Model Analysis is used by Dr. Clough for Shannon and Wilson, Inc. in their analysis of the Lock and Dam 26 (Replacement). Both this and the vertical slice types of models are analyzed with interface slip elements between sheets and cell fill, and on any planes in the foundation where slippage could occur.

c. Horizontal Slice Analysis. The third analysis model, Figures 4-24 and 4-25, is a "Horizontal Slice" including from center-line main cell to center line of arc cell and from outermost edge to center line of cofferdam. This horizontal slice model may be used at many different elevations in the cell to obtain a better analysis of interlock tension and sheet pile stresses. Since a symmetrical loading is assumed on the structure, this analysis technique can only be used for analyzing forces due to cell filling.

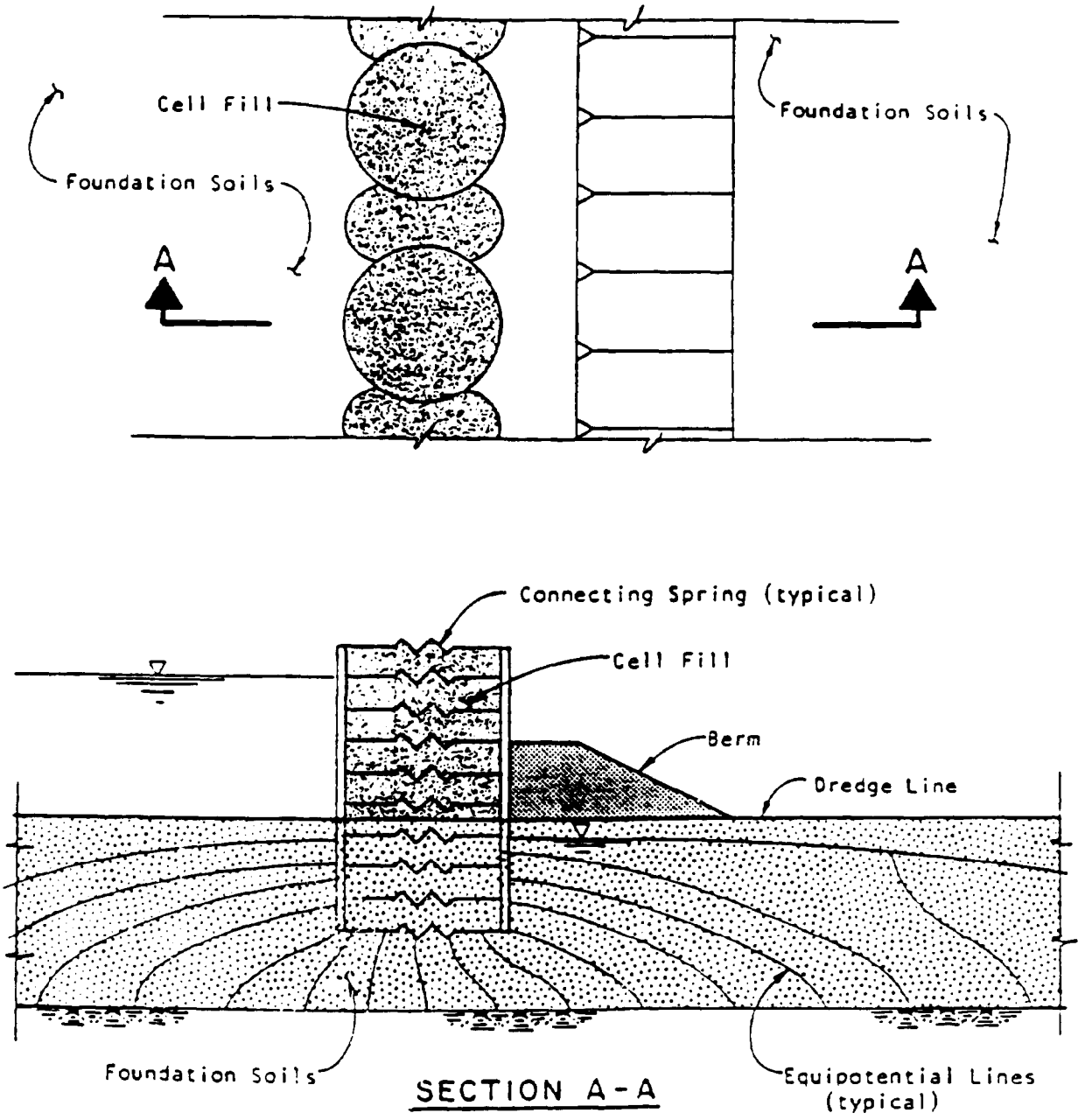

Figure 4-20. Schematic drawing, vertical slice model

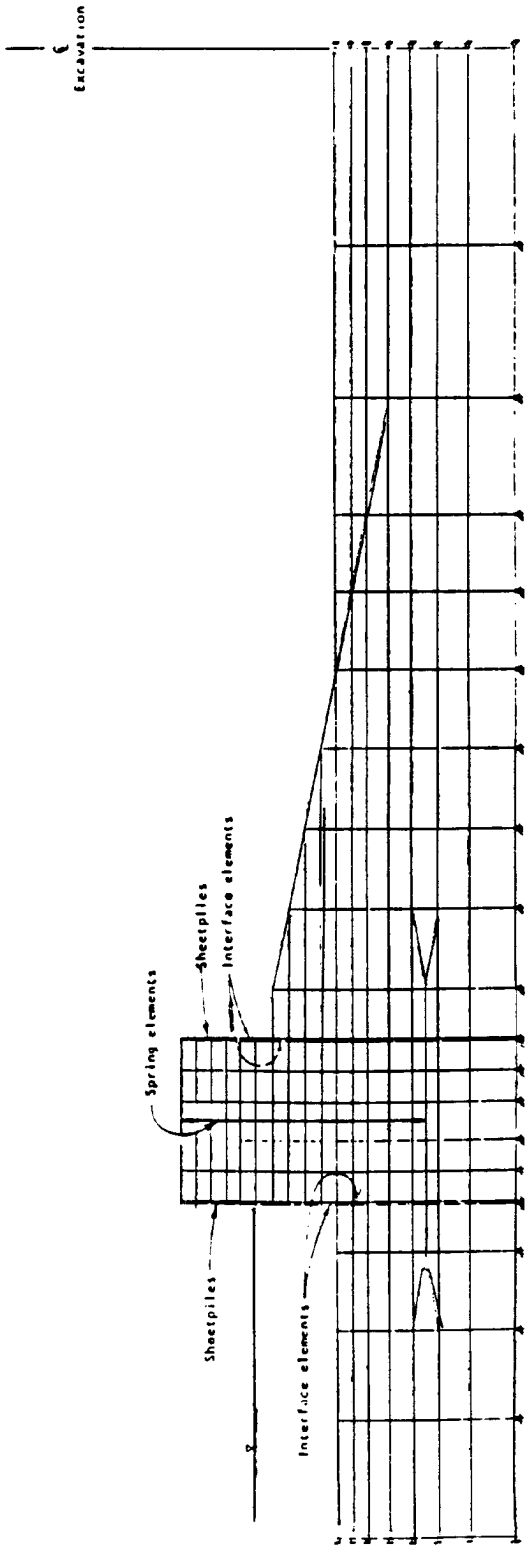

Figure 4-21. Vertical slice analysis, finite element mesh

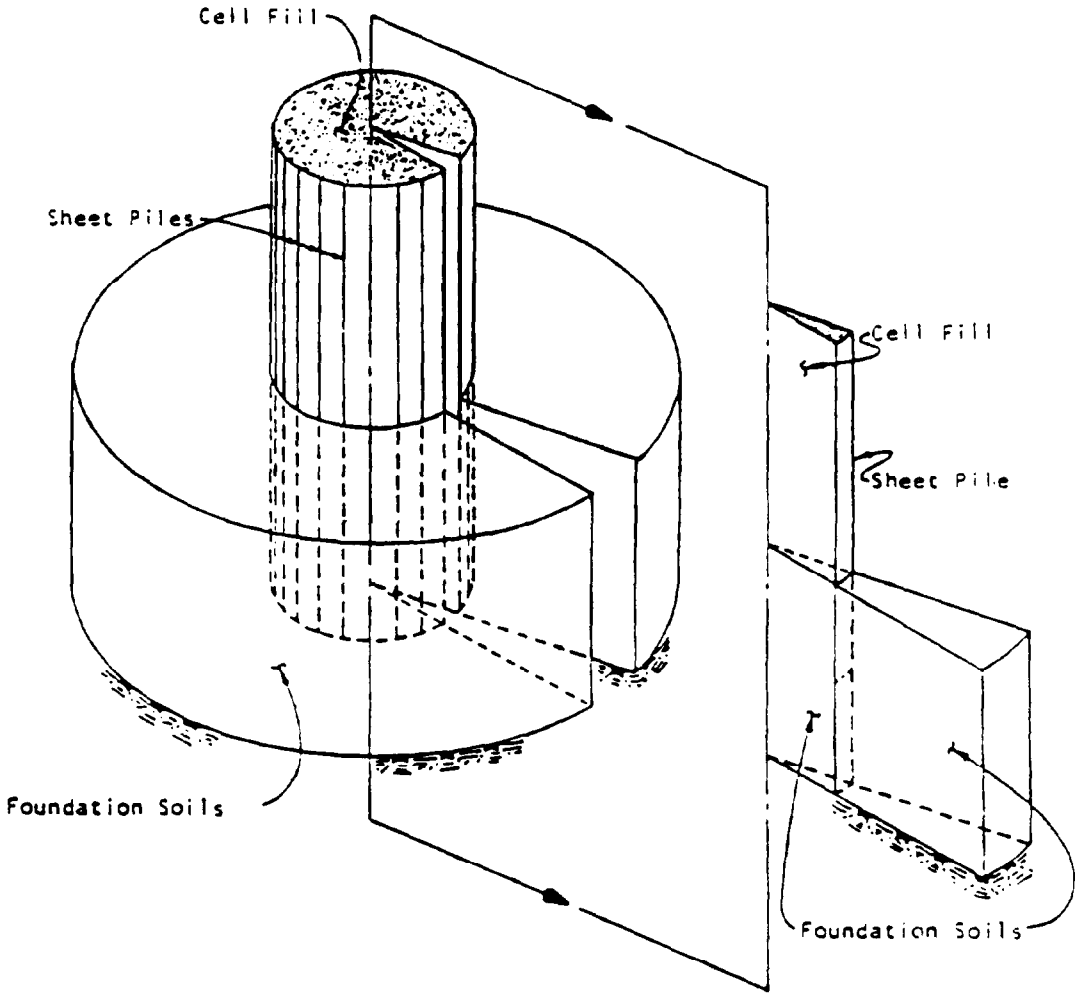

Figure 4-22. Schematic drawing, axisymmetric model

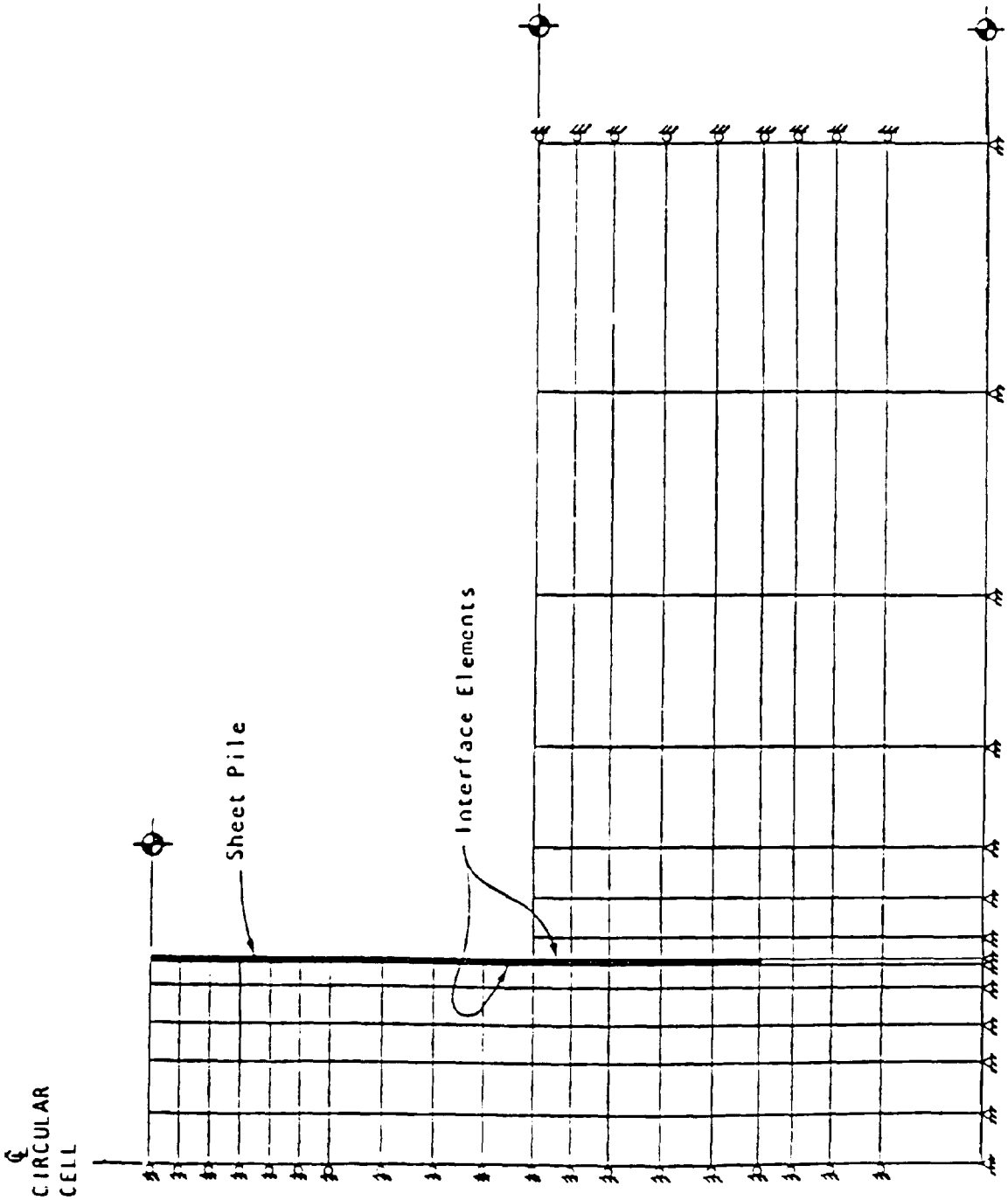

Figure 4-23. Finite element mesh for axisymmetric analyses of main cell filling

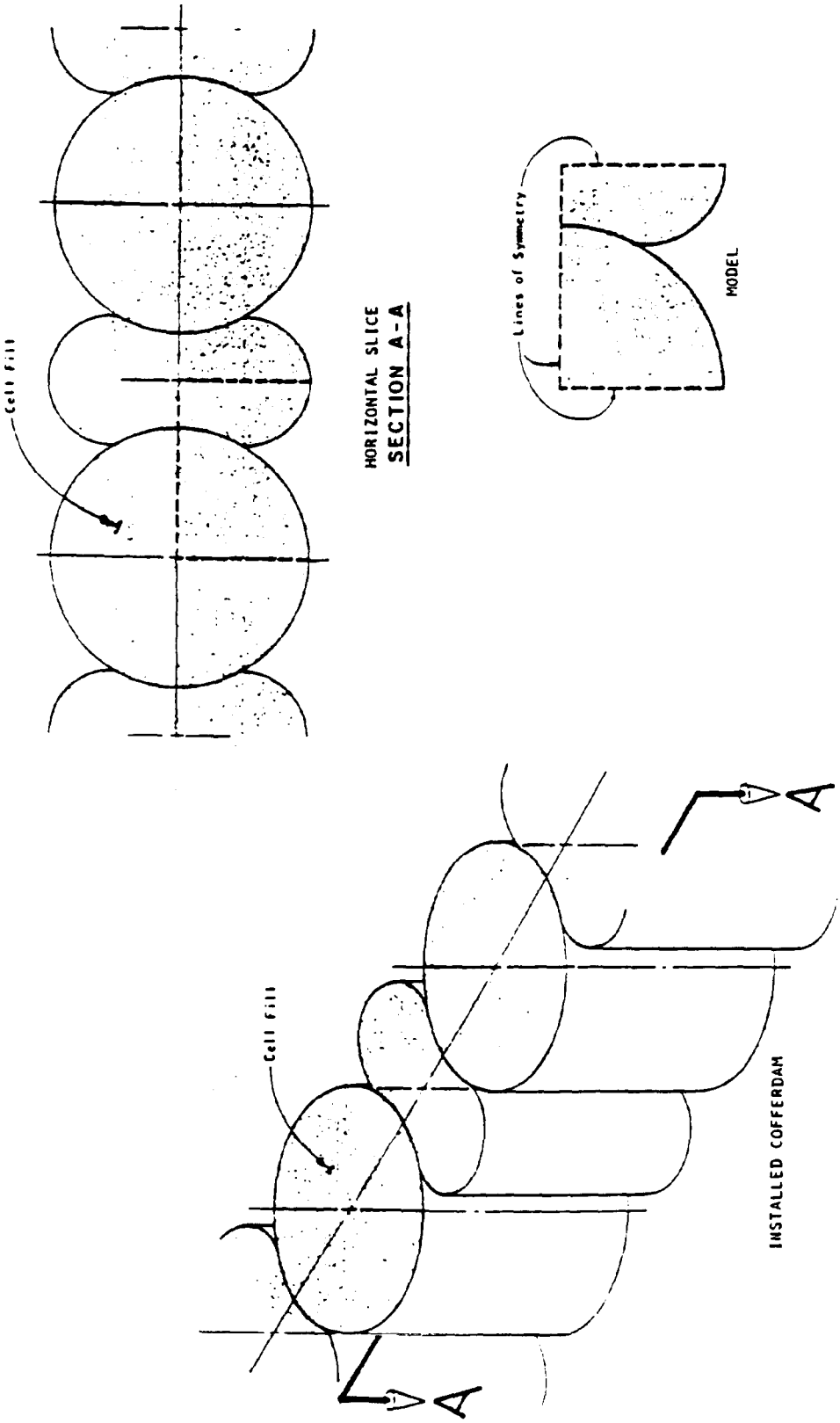

Figure 4-24. Schematic drawing, horizontal slice model

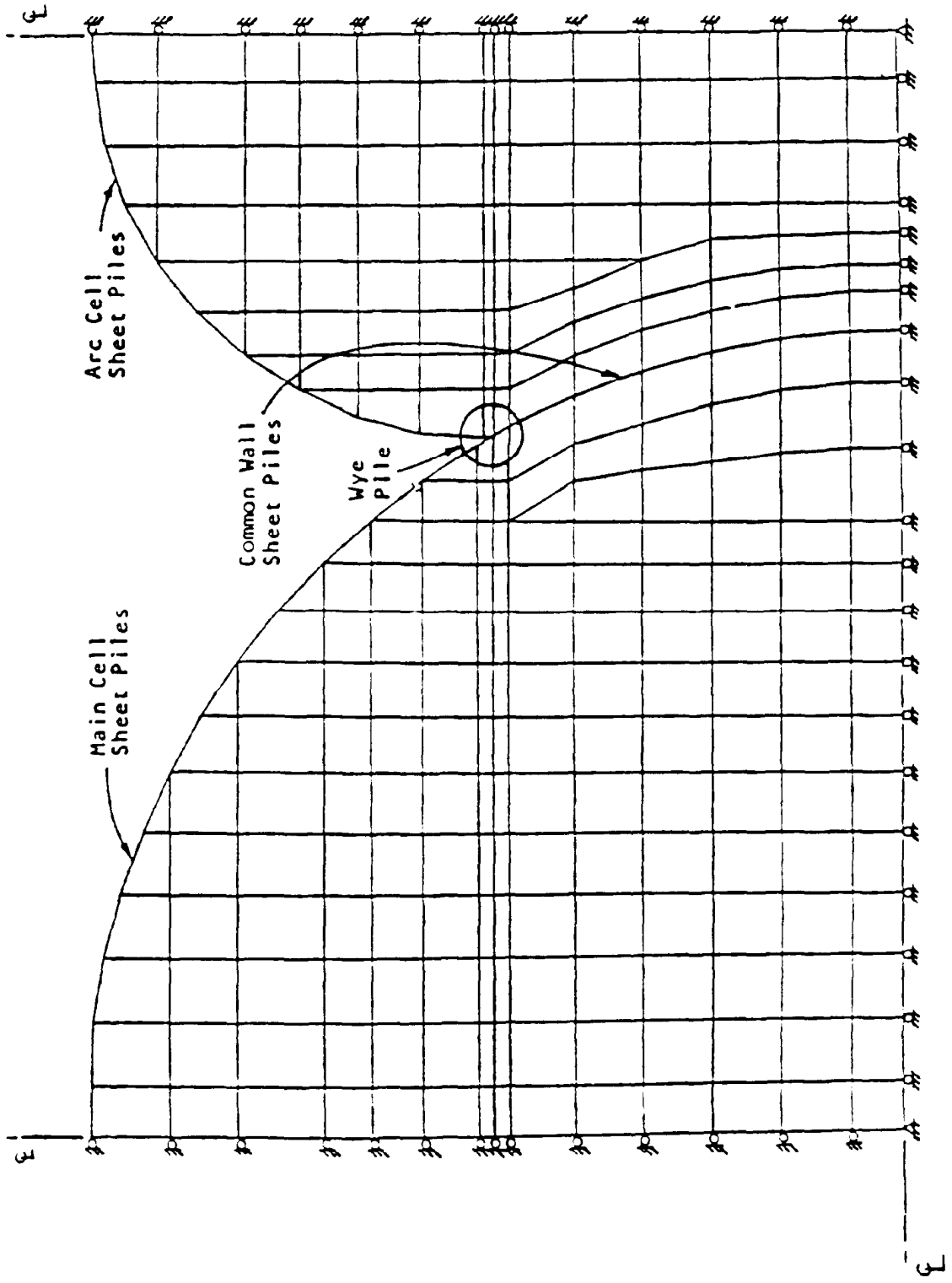

Figure 4-25. Finite element mesh for horizontal slice analysis of cell filling

d. General Modeling Techniques. Best results have been achieved on the three models by assuming the cell acts as an orthotropic shell by reducing the stiffness of sheet piles in the radial and circular directions during cell filling and acts as an isotropic material for all future construction steps. This is accomplished by reducing the modulus of elasticity in these directions. It is important for the analysis technique to breakdown the analysis into a series of incremental construction steps to allow deflections, settlement, and stresses to uniformly increase in the cell and foundation. Simulation of the actual sequence of loading is important because the stress-strain response of soil is nonlinear and stress-path dependent. All three model types are used in the Shannon and Wilson report.

4-20. Estimates of Cell Deformations.

a. Cell Buldging During Filling. During filling, the cell walls deflect outward as the fill pressures increase. This deflection in the radial direction, resisted by the sheet pile structure and foundation, causes the cell to form an area of maximum deflection and maximum interlock tension in the lower one third of the height above dredge line. This process of radial deflection transforms the cellular structure from a loosely pinned set of sheets into a structure more closely resembling a rigid cylinder. Because the cell is not a rigid cylinder the finite element model assumes that the sheet piles act orthotropically with less stiffness in the radial and circumferential directions than in the vertical. Three factors, other than stress-strain deflections, in the sheet piles support this assumption and contribute to higher deformations. First, interlocks are not perfect pins and gaps form in connections, The slack produced by gaps is taken up when pressure is applied to the inside of the cell by filling. Second, the interlocks provide a very small bearing area to transmit radial and circumferential forces from sheet pile to sheet pile. This allows for a small amount of rotation and local yielding in the interlocks. Third, due to the slack in the interlock it is possible for misalignment to occur during driving and, consequently, the cells have an irregular shape. The cells will tend to realign to a more perfect cylindrical shape during filling. To account for these deformations, the assumption of the cell's acting as an orthotropic cylinder is made by reducing the modulus of elasticity, horizontally and not vertically. In the Shannon and Wilson studies (item 69) at Lock and Dam 26 (Replacement), three different ratios of horizontal-to-vertical modulus were used in FEM solutions. These ratios were 1.0, 0.1, and 0.03. The E-ratio of 0.03 yielded results very close to actual field instrumentation. Vertical slice and axisymmetric models should be used for analyzing deflections during cell filling,

b. Deflections Produced by Berm Placement. Deflections of the filled cell during berm placement are normally small. Analysis of deformations for this stage can only be done using the vertical slice model and should be analyzed using uniform stages of berm construction. Previous FEM solutions in Lock and Dam 26(R) have shown slight deflections toward the outboard side of the cell of approximately 1 inch at the top. Soil stresses also increase on both sides of the sheet pile at the berm location and in the foundation soils under berm. Foundation pressure increases on the outside of the outboard side

of the cofferdam indicate the filled cell is now acting as a unit and transferring inboard pressures through the circular cell to the outboard foundation.

c. Cofferdam Unwatering and Exterior Flood. Deflections and soil pressures resulting from cofferdam unwatering and exterior flood conditions are similar and, thus, are discussed together. Modeling of both conditions should be done by using a vertical slice model analysis and incremental load steps as the water level changes to allow for nonlinear soil deformations to take effect. Loads caused by seepage under the cofferdam should also be included using a flow net or uplift type analysis. From FEM modeling it can be seen that the cofferdam deforms by rotating and causing sliding forces toward the inboard side. These deformations increase the soil pressures in the cell fill and foundation directly under cell. Noted are higher soil pressures in the exterior foundation of the inboard side and in the berm due to passive soil resistance. Deflections of top of cell and high soil pressures in berm during exterior flooding indicate from previous analysis that the cell is moving as a unit with a tendency toward rotation for high exterior water levels. These model techniques are used in Lock and Dam 26(R) and Willow Island Cofferdam where, in addition to flood conditions, it was necessary to analyze an extra filling and unwatering of the cofferdam.

d. Construction Excavation. From previous analysis models, construction excavation has not been shown to cause significant cofferdam deformations except in the case of a cofferdam over a potential slip plane where excavation would reduce passive resistance to planar sliding. The potential slip plane should be modeled using frictional slip elements as shown by Clough and Hansen on the Willow Island Cofferdam study (item 18).

4-21. Structural Continuity Between Cells and Arcs. Cell and arc interaction can be analyzed by using a horizontal slice model and plane strain fill elements due to the perpendicular fill loading. A separate model analysis must be made at each elevation for which results are needed to obtain loads. Bar elements are used to represent sheet pile walls, with orthotropic material properties discussed earlier as bar properties. The Y-sheet pile connection between cell and arc should be modeled using exact piling widths as lengths of bar elements with pins at ends and at the Y-connection to more correctly simulate forces in the Y-connection. The simulation of construction steps for the horizontal model is loaded using results of the axisymmetrical model. This is due to the two-dimensional model's inability to account for arching in the cell and support provided by foundation passive resistance. Also, because of the model‘s inability to account for cell arching, fill stresses for each construction step must be obtained from the axisymmetrical analysis. Results for interlock tension and horizontal deflection that show close correlation to field instrumentation have come from this type of analysis. The horizontal model can only be used to analyze the symmetrical condition of cell filling. Only one study (item 69) of this type of analysis has been made to date, the Shannon and Wilson, Inc., Lock and Dam 26 (Replacement).

4-22. Structure--Foundation Interaction.

a. Foundation Stress at Cofferdam Base. Interaction between structure and foundation is modeled using a vertical slice analysis with a model cut wide enough and deep enough for foundation stresses to distribute evenly into foundation. The model should also include any planes of weakness in the foundation near the cofferdam. FEM analysis to date has shown foundation stresses are caused by two types of cofferdam action. First, due to filling of the cell, the sheet piles deflect outward and cause a buildup of passive resistance pressure in the foundation outside of the sheet piling. Vertical pressures in the foundation under the cell fill increase as a result of fill height above foundation. Second, after filling of the cell is completed, the cofferdam acts against horizontal forces as a monolithic cylinder resisting sliding by shear and passive pressures in the soil and overturning by the masses' resistance to tipping moment. The cell gains additional resistance to both sliding and overturning by the sheet pile's depth and, thus, interaction with the foundation.

b. Investigation of Foundation Problems. Investigation of foundation problems is one important advantage of FEM analysis. In cofferdam modeling, an element known as a planar frictional slip element can be used between elements to model a natural slippage plane between materials. These elements allow a buildup of shear stresses on the plane, and at an ultimate stress the two sides of the slip plane are allowed to slide in relation to each other. This action allows the adjacent element nodes to separate at the plane under a constant frictional resistance. These elements also have properties that will allow the two sides of the slip plane to pull apart, transverse to the plane, when placed in tension. Possible causes of foundation problems such as cofferdam dewatering, exterior flood, and interior excavation are failure load cases which should be investigated. A detailed description of use of this slip element is given in the Clough and Hansen study at Willow Island Cofferdam.

4-23. Fill Interaction Between Cells and Arc. Interaction of the main cell fill and arc cell fill has not currently been modeled due to cylindrical structure assumptions used in the vertical slice and axismmetric models. In the horizontal slice model the fill was assumed to be placed simultaneously in the main cell and arc which does not model the true sequence of construction. More research is needed in this area and would be more applicable for modeling with a three-dimensional soil-structure FEM analysis.

4-24. Special Cofferdam Configurations.

a. Cloverleaf Cells. Cloverleaf cofferdam cells at Willow Island were modeled in the Clough and Hansen study. The results of this analysis showed inconsistent patterns of deflection and indicated more research is needed. Part of the problem with modeling cloverleaf cells in two dimensions is accurately accessing the stiffness provided to the cell by center cross-walls.

b. Diaphram Cells. Past literature shows no attempts to analyze diaphram cells or other cell configurations by the FEM analysis. Development of a three-dimensional soil-structure finite element program with all of the necessary capabilities will enable modelers to more accurately analyze forces present in any special configuration of cell.

4-25. Research and Modeling Developments. Currently, research is being conducted by US Army Engineer Waterways Experiment Station (WES), Information Technology Laboratory (ITL), formerly Automation Technology Center (ATC), to develop a Corps of Engineers three-dimensional, soil-structure finite element program. With all of the capabilities necessary to model cellular cofferdams, the program will be tested on the Lock and Dam 26 (Replacement) cofferdam, since it is the most extensively instrumented cofferdam of current practice.

CHAPTER 5

ENGINEER CONSIDERATIONS PERTAINING TO CONSTRUCTION

5-1. General. The safety and performance of sheet pile cellular structures are very sensitive to site conditions and construction practices. This is particularly true for cellular cofferdams since many failures have been attributed to site conditions or construction practices, the effects of which were not properly taken into account in the design. Great care must be taken to ensure that the effects resulting from all potential construction and in-service site conditions, and construction techniques, are properly anticipated, considered, and accounted for in the design. In addition, construction progress must be closely monitored by design personnel in order to evaluate or verify design assumptions and to recognize any changed conditions which might require a design modification.

5-2. Failures.

a. Failure Modes. The primary reported causes of cofferdam failures are:

(1) Structural.

(a) Fabricated Tees and Wyes. Numerous failures have involved welded connector piles. Such failures in welded tees normally occurred in the web of the main sheet pile, the web often rupturing on both sides of the tee stem and separating the tee into three pieces. Weakness in these tee members is attributed to improper welding of steel with a high carbon content and laminations in the steel sheet piles used in fabricating the tees.

(b) Sheets and Interlocks. Interlock failure has resulted primarily from hard driving through dense or excessively deep overburden, overburden containing boulders, or from attempting to drive sheets of the connecting arcs past distortions in previously filled main cells. Splicing new and used sheet piling of different manufacturers has resulted in unpredictably high localized stresses in the interlocks and in the webs of sheets with resulting failure.

(2) Environmental Conditions. Scour and other effects of river currents have contributed to a number of cofferdam failures. Where the overburden is susceptible to erosion, scour due to high velocity flow is a serious problem. By removing the lateral support provided by the overburden interlock, stresses have increased. Where driving through the overburden was difficult, some sheets have not penetrated to rock or have been driven out of interlock. Continued scour exposed these deficiencies and resulted in loss of cell fill and subsequent failure. High water has contributed to several failures by raising the level of saturation in the cell fill thus increasing interlock stresses.

(3) Stability.

(a) Soil Mechanics. Cofferdams built in accordance with current design

practice have generally proved adequate as far as the soil mechanics aspects of the design are concerned. However, there is the exception of piping failures at cofferdam cells tying into existing structures or into high ground. In these cases, failures have resulted from loss of cell fill due to piping caused by inadequate provision for seepage control.

(b) Foundations. A few cofferdam failures have occurred because of foundation failure well below the base of the cells. This mode of failure has been precipitated by faults, slip planes, or high uplift pressures not recognized as problems during design. Also, foundation failure has occurred because of excavations located too near the cofferdam cells which allowed stress relief and relaxation of the rock.

(4) Saturation of Cell Fill. Saturation of the cell fill is associated with many failures. The pressure of the water when added to the lateral pressure of the cell fill increases the interlock stresses. The saturation of the fill in the connecting arc is a particularly potent danger because of the magnitude of the tension that can be created on the outstanding leg of a connector. It should be noted that saturation can be caused by means other than the common leakage through the interlocks, holes, splices, and filling by the hydraulic dredge method. Waves splashing over the top of the cells, leakage, or breaks in the discharge lines of unwatering pumps over the cells can quickly cause saturation of the fill.

(5) Construction Practices. A number of failures have occurred during construction of cofferdams which may have been attributable, in part, to construction practices. Unless the sheet piling is driven in overburden, the lateral stability of the cell is largely dependent on the support furnished by the template until fill is placed in the cell. If this support is inadequate or the filling operations impose severe loads on the sheet piles, local distortion or collapse may occur. The practice of driving sheet piles in pairs may be detrimental if the bedrock is uneven. Windows or split interlocks can occur with possible loss of cell fill and subsequent failure. Therefore, when piles are driven in pairs, the sheets should be seated in rock individually.

b. Conclusions. Based on available information, as summarized above, the following conclusions can be drawn:

(1) Current soil mechanics design practices are adequate to produce a stable cell. Analytical methods for investigating foundation stability also appear to be satisfactory. Reported failures due to foundation failure have generally resulted from a failure to recognize potential failure planes or when recognized, failure to assign realistic strengths to such planes.

(2) Saturation of the cell fill is present in a large number of cofferdam failures.

(3) Structural failure of 90-degree welded tees has been the most prevalent cause of cofferdam failure.

(4) Scour due to high velocity flow is a common cause of cofferdam failure.

5-3. Recommended Practices. The following recommendations regarding design, construction, and maintenance of cellular sheet pile cofferdams have already been discussed in preceding chapters. However, their importance should again be stressed.

a. Analyses should evaluate the effect of full saturation of the cell fill unless positive measures are taken to control the saturation level throughout the life of the cofferdam.

b. Welded connector piles have not proven satisfactory in the past and shall no longer be used. Riveted or bolted connections with minimum 1/2-inch thick webs shall be required.

c. Wye connectors are preferable to tees. The tension in the outstanding leg of the connector is less for a wye since the load is applied more nearly tangent, rather than at right angles, as is the case with a tee.

d. Pull on the outstanding leg of connector piles should be limited by keeping the radius of the connecting arc as small as possible. The arc radius should not exceed one half of the radius of the main cell.

e. Where there is used piling in a cofferdam, care should be taken to make sure the sheets are gaged and will interlock properly. Special care should be taken in splicing used sheets to make sure the spliced sheets are compatible.

f. All handling holes in the sheet piling on the loaded side of the cofferdam should be plugged. This is necessary to prevent an objectionable amount of water from entering the cell or loss of cell fill.

g. Sheet piling should not be driven through overburden containing boulders. Extremely dense overburden should be excavated to a depth such that it can be penetrated without damaging the piling. Although dependent on the nature of the overburden, 30 feet is generally accepted as a maximum depth to drive through overburden.

h. When driving is difficult, jetting may be used to facilitate driving. However, this technique should be used with caution since there is a danger that the sheet piles will follow the jetted hole and will split out the interlock.

i. If it is not possible nor practical to fully penetrate the overburden with the sheet piles and if scour by river flow is a possibility, the overburden should be protected against scour.

j. Setting sheet piling on bare rock should be avoided wherever possible since support from the overburden is beneficial in helping maintain the desired cell configuration.

k. Each run of piling shall be driven to grade progressively from the start, so that the bottom end of any pile shall not lead the adjacent pile by more than 5 feet. This requirement will reduce the chances of splitting the interlocks.

l. The direction of the pile hammer advance should be reversed after each pass in order to ensure that the piles are driven plumb.

m. Connecting arcs should be driven and filled after the adjacent main cells have been driven and filled. However, at least the first two sheets of the connecting arc adjacent to the main cells should be driven prior to filling the main cells; otherwise, barrelling of the main cells would make driving of the arcs extremely difficult.

n. Diver inspection of the interlocks, after filling of the cells, should be required.

o. Wherever cells and fill are placed against sloped or stepped faces of existing concrete, care should be taken to seal the contact between the sheet piles and concrete to prevent infiltration of water which could saturate the fill or cause piping.

p. The cofferdam cells should be located a sufficient distance from open excavations to protect them from any instability of the excavated faces.

CHAPTER 6

DEWATERING AND PRESSURE RELIEF

6-1. Purpose of Design. A cellular cofferdam is a temporary structure constructed in a river, lake, etc., to exclude water from an enclosed area (item 53). This allows the interior of the cofferdam to be dewatered and the permanent structure to be constructed in the dry. Usually cofferdams must withstand large differential heads of water; therefore, it is imperative that surface water and seepage be controlled, artesian pressure be relieved, and emergency facilities to prevent overtopping be made a part of the cofferdam to ensure a stable and competent structure.

6-2. Dewatering and Pressure Relief. Dewatering of a cofferdam can be accomplished in two phases. The first phase is initial dewatering (or pump down) to remove water from the interior of the cofferdam. The second phase is foundation dewatering to lower (or draw down) the ground water, to ensure a dry and stable construction area. The size and type of the dewatering system depends on the size of the cofferdammed area to be dewatered, total quantity of water to be pumped, geological conditions, and soil characteristics. According to TM 5-818-5 (item 1), a properly designed, installed, and operated dewatering and pressure relief system can greatly facilitate construction in the cofferdammed area by: intercepting seepage that would otherwise emerge from the slopes or bottom of the excavation; increasing the stability of the slopes and preventing the loss of material from the slopes or bottom of the excavation; reducing lateral loads on cofferdams; and improving the excavation and backfill characteristics of sandy soils.

a. Initial Dewatering. The maximum rate of dewatering is controlled by the stability of the inside land bank, by cell drainage, and by cell interlock stresses. Generally, the first 15 feet are dewatered without restrictions so that differential pressure can be developed quickly to close the interlocks tightly. Thereafter, the rate for dewatering is 5 feet per day, which is normal for large cofferdams (items 56 and 76). Drainage of the cells and connecting arcs must closely follow the dewatering of the cofferdammed area, and should cell drainage lag, the dewatering rate should be slowed down. For "clean" cell fill, weep holes should be burned in the inboard sheet pile of all cell and connecting arcs during dewatering. Current practice is to burn l-inch-diameter weep holes at about 5- to 6-1/2-foot centers vertically on every third to sixth sheet pile down to the top of the berm or to the inside ground surface if no berm is used (item 12). Throughout dewatering operations, the weep holes should be systematically rodded to maintain cell drainage. For marginal or "dirty" cell fill, weep holes by themselves may be insufficient to drain the cells; therefore, well points or deep wells should be installed in the cells to ensure adequate drainage and to increase cell rigidity (item 52). Occasionally, cell drainage is impeded by tremendous inflows through the interlocks on the outboard side of the cofferdam. Dropping clay, slag, cinders, or coal dust around the outside of the cofferdam to plug openings in the interlocks will rectify this condition (item 38). The need to keep the cells and connecting arcs free-draining cannot be overstated for the

reason cited in paragraph 5-2a4. As the cofferdammed area is dewatered the sheet pile should be examined for damage. If split sheets or separated interlocks are revealed, dewatering must be stopped, according to Patterson (item 56). Should the damage extend for some distance, it may be necessary to reflood the cofferdam, excavate the fill from the questionable cell, and replace the damaged piling. If the damage is not extensive, straps should be welded across the split a short distance above the top of the split. Strapping should be carried closely along as the dewatering is continued. Dewatering of the cofferdammed area dictates that maximum pumping capacity be provided. Plenty of reserve pumping capacity should also be available in case of mechanical breakdowns. The pumps should be placed as near the water level as possible because the pumps will push water more efficiently than they will pull it, as explained in item 38.

b. Foundation Dewatering. After completion of the initial dewatering phase, the ground water in the foundation must be controlled throughout construction of the permanent structure. The ground water must be drawn down so that a dry and stable construction area is provided. The primary sources of ground water are seepage through and underneath the cells and surface water which percolates into the ground before it can be collected and pumped out. The quantity of seepage can be estimated using those methods discussed in paragraph 4-9a4e. The most commonly used dewatering method for soils that can be drained by gravity flow is the conventional wellpoint system. It is limited to about 15 feet of drawdown per stage; however, multiple stages may be used. This system is most practical for large excavations in the cofferdam basin where the depth of excavation does not exceed 30 to 40 feet. For large excavations deeper than 40 feet or where artesian pressure in a deep aquifer must be relieved (discussed in paragraph 6-2c) deep wells with turbine or submersible pumps should be used. Deep wells can be installed around the periphery of the excavation, thus leaving the construction area free of dewatering equipment. For more detailed information concerning dewatering methods and equipment refer to item 1.

c. Pressure Relief. Artesian pressures from underlying aquifers which endanger the stability of the cofferdam and berms or excavation in the interior of the cofferdam must be relieved. Depending on the piezometric level, pressure reduction in the aquifer may be required before dewatering of the cofferdam (item 72). Complete relief of artesian pressures to a level below the bottom of the excavation is not always required depending on the thickness, uniformity, and permeability of the materials. Artesian pressure can be relieved by deep wells or wellpoints as previously discussed in 6-2b. The penetration of the wells or wellpoints should be no more than that required to achieve the drawdown required to minimize artesian flows. The formulas for artesian flow presented in Appendix IV of TM 5-818-5 (item 1) should be used to design or evaluate the pressure relief system. Because of the critical nature of pressure relief and the rapid rate at which an aquifer would recover if pumping were interrupted, backup systems should be provided. The system should be designed for a capacity approximately 50 percent greater than that expected to be required. For more detailed information concerning design of relief wells, refer to EN 1110-2-1905.

6-3. Surface Water Control. A well-designed dewatering and pressure relief system must include provisions for collecting and pumping surface water so that dewatering pumps cannot be flooded. Surface water, which includes rainwater, inflow through the interlocks, drainage through the weep holes, and seepage which emerges from the surfaces of berm and excavation slopes, may be controlled with ditches, French drains, or sumps. The area enclosed by the cofferdam should be sloped to drain toward one or more centrally located sumps where the surface water is collected and pumped out. In addition, ditches or French drains should ring the perimeter of the cofferdammed area to divert inflow through the interlocks and drainage through the weep holes to the sumps. The number and size of the ditches, French drains, and sumps depend on the size of the cofferdammed area, characteristic of the soil, rainfall frequency and intensity, and the estimated inflow and drainage through the interlocks and weep holes, respectively. The estimated inflow through the interlock should be assumed to equal at least 0.025 gallons per minute per square foot of wall per foot of net head across the wall for installations in moderately to highly permeable soil (item 86).

6-4. Emergency Flooding. Large cellular cofferdams in areas where they may be overtopped should be constructed with sluiceways, floodgates, or both to control floodwaters (item 78). Flooding of the interior of the cofferdam by allowing uncontrolled floodwaters to overtop the cells may cause serious damage to the cofferdam by washing material from the cells or by eroding the berm, not to mention the damage to the permanent structure under construction. Frequently the cells are capped with 6 to 12 inches of lean concrete to prevent the washing out and saturation of cell fill. Enough floodgates should be provided so that, the cofferdammed area can be flooded at least two-thirds full within 4 to 6 hours, or before any cell is overtopped, if the cofferdam is in imminent danger of being overtopped (item 77). The size and number of floodgates depend on the size of the cofferdammed area to be flooded and the anticipated rate of rise of the river.

a. Construction of a floodgate is best done by using a connecting arc area between two circular cells at the downstream end of the cofferdam. The connecting arc sheet piles should be burned off near normal pool, and the area should be capped with 18 to 24 inches of reinforced concrete. A recess should be formed in the concrete cap to support the bottom of a timber or steel bulkhead. The area adjacent to the connecting arc should be sloped and protected with stone to prevent scouring as floodwaters enter the interior of the cofferdam.

b. Flood-stage predictions must be carefully monitored as a basis for determining when equipment should be evacuated from the cofferdammed area, and the floodgates should be opened to prevent overtopping, If serious inflows through the interlocks occur due to the flood stage, it may become necessary to flood the cofferdammed area to equalize pressures and prevent serious damage to the cofferdam, even though predictions do not anticipate that the cofferdam will be overtopped by floodwaters. Floodgates and sluiceways are also used for flooding the interior of the cofferdam upon completion of the construction and just prior to the removal of the cofferdam.

CHAPTER 7

INSTRUMENTATION

7-1. Systematic Monitoring. Planning the monitoring program should be approached systematically. Ideally, the planning process begins with a definition of objectives and ends with actions dictated by an evaluation of the data. A hasty and unplanned approach is likely to omit consideration of many pertinent factors. The planning process should include appropriate steps as outlined below. Omission or inadequate consideration of these key planning steps will guarantee a high probability of failure and vice versa.

7-2. Proper Planning. A check list for planning will include the following steps (item 28):

a. Definition of Project Conditions. This will entail an understanding of the type, function, and duration of the structures, subsurface stratigraphy and engineering properties, ground-water conditions, status of nearby structures or other facilities, environmental conditions, construction methods, scheduling, and funding.

b. Purpose of Instrumentation. Details are discussed in paragraph 7-3.

c. Selecting Variables to Monitor. The variables selected for monitoring will depend on the project conditions and the purpose of the instrumentation. These may include water levels in the fill and stabilizing berm, pore pressure in the foundation, earth pressure in the soil mass and at the soil-structure contact, surface and subsurface horizontal deformation within the foundation, the fill, and along a sheet pile member, strain in the sheet pile, and load in anchors and tiebacks.

d. Predicting Behavior. This step helps to establish the range and accuracy or precision of the instruments. It also helps to determine where instruments should be located, Prediction of behavior also establishes a numerical value of deviation from anticipated performance at which some action must be taken to prevent failure, protect property and human life, or alter construction procedures.

e. Responsibility. It must be decided who will be responsible for procurement, calibration, installation, monitoring, and maintenance of the instrumentation system. The data must be promptly processed and evaluated by responsible individuals. It must also be decided who will react to the data and who has overall responsibility.

f. Selection of Instruments. The most desirable feature to be considered in selecting an instrument is reliability. It should be the simplest instrument that will get the job done, be durable to withstand the ambient environment, and not be very sensitive to climatic and other extraneous conditions. Other factors to be considered are cost, skills required to process the data, interference to construction, instrument calibration, special access

while monitoring, accuracy, and the range of predicted responses compared with the range of the instrument.

g. Instrument Layout. A few selected critical zones should be instrumented fully; whereas, other locations may be equipped with fewer and less expensive instruments. The layout should facilitate obtaining appropriate information during each critical stage and be flexible enough such that changes can be made should there be malfunctions and as new information becomes available.

h. Preparation of Plans and Specifications. A general plan and appropriate sections and details should be developed which clearly show the locations, quantity, and installation details of each instrument. The specifications should specify who has responsibility for each activity (e.g., procurement, installation, calibration, maintenance, data collection, and evaluation) and give special instructions pertaining to each. The method of payment should be spelled out, overall responsibility designated, and authority to make changes specified. These two documents must be consistent and complete to avoid ambiguity and subsequent claims by the contractor.

i. Processing and Evaluating Data. This step includes preparing data sheets; establishing monitoring schedules; setting requirements for collecting and transmitting data; data reduction, analysis, and interpretation; and data evaluation.

j. Other Considerations. Determining factors that may influence measured data, planning to ensure reading correctness, listing specific purpose for each instrument, and acquainting new personnel with the system must be studied.

7-3. Purpose of Instrumentation.

a. The purpose of the monitoring program must be known, understood, and accepted by all pertinent parties to ensure success. Much time, energy, and money can be saved if the purpose is derived early in the process. Understanding the purpose helps to direct available resources toward specific activities, and extraneous efforts are essentially eliminated.

b. The purpose of the monitoring program may be singular or pluralistic, including one or more of the following:

(1) Verifying design assumptions and methods.

(2) Verifying contractor's compliance with the specifications.

(3) Verifying long-term satisfactory performance.

(4) Safety.

(5) Legal reasons.

(6) Advancing the state of the art.

(7) Verifying adequacy of a new construction technique.

(8) Controlling the rate of progress of construction.

(9) Accessing impact on environmental conditions.

c. The purpose will be influenced significantly by such project conditions as the type, function, and duration of the structure, the subsurface conditions, the nature and extent of the ground-water conditions, the proposed construction methods and procedures, environmental conditions, confidence in the design approach, potentials for litigation, etc. Most of this information is developed in the design stages, with new data and changes provided as the project progresses. The designer of the monitoring program should assume the responsibility of acquiring, understanding, and keeping abreast of all factors that may impact upon the monitoring program.

7-4. Types of Instruments. The kinds of instruments selected will depend on the purpose, project conditions, and the variables that will be monitored. Each variable monitored will require a specific kind of instrument, e.g., pore pressure will be monitored with some type of piezometer. A variety of instruments varying in the degree of sophistication is available from both domestic and foreign manufacturers and suppliers. The following is a brief description of the more common instruments used in a program to monitor steel sheet pile structures.

a. Observation Wells. The observation well consists of a riser pipe connected to a perforated or porous tip at the lower end and is installed in a borehole to some specified depth or attached to the sheet pile before driving. The annular space of the borehole is backfilled with sand or fine gravel and sealed at the ground surface with grout or other suitable impervious material to prevent entrance of surface water. Observation wells are mainly used to measure unconfined ground-water levels and are monitored directly by a probe or tape. If observation wells penetrate more than one aquifer or penetrate a perched water table and an underlying aquifer, the resulting water levels are average ground-water levels and are generally not very meaningful. This is a decisive disadvantage of observation wells, but if the subsurface conditions and the nature of the ground-water regime are well defined, observation wells can be installed to provide very meaningful data. Observation wells may be installed to monitor ground-water levels in the cell fill, backfill materials, and stabilizing berms. Installation can be made during sheet pile driving by attaching the casing and slotted or perforated tip (an inexpensive well point can be used) to the sheet pile. Provisions should be made to protect the tip and casing during driving if damage is likely to occur.

b. Piezometers. The term piezometer is used to denote an instrument for monitoring pore pressures in a sealed-off zone of a borehole or fill. Piezometers can be classified into five types, depending on the principle used to activate the device and transmit the data to the point of observation. The

five types of piezometers include the open standpipe piezometer, the closed hydraulic piezometer, the diaphragm piezometer, the vibrating wire strain gage piezometer, and the semiconductor strain gage piezometer. A variety of each type of piezometer is available from domestic and foreign manufacturers and suppliers. Piezometers are used to monitor pore pressures in the cell fill and foundation, in the stabilizing berms, and in the backfill material. The type of piezometer selected should be based on such things as reliability, ruggedness, suitability, simplicity, cost, interference to construction, etc. The open standpipe piezometer has the advantage of simplicity and its use is widespread. In those cases where minimum time lag is a significant factor and when high artesian pressures must be monitored, a pneumatic or a vibrating wire strain-type gage piezometer would be more suitable. Installation can be made during pile driving by securely attaching the piezometer to the sheet pile and protecting the tip and riser pipe or tubes from damage. Installation after fill placement is complete can be done by any appropriate conventional method.

c. Inclinometers. Inclinometers can be used to monitor horizontal deformation within the cell fill, along the length of a sheet pile section, in the cell foundation, and within the stabilizing berm. The inclinometer system consists of a pipe installed in a vertical borehole or securely attached to the surface of a sheet pile in the cell. Normally, the lower end of the casing is anchored in rock and serves as a reference point. Casing attached to sheet pile is normally not anchored in rock. The top of the casing is referenced to monuments outside the construction area. A sensor, which measures the inclination of the casing at depths determined by the observer, is used to monitor the full length of the casing. The sensor is connected to a graduated electrical cable which is used to lower and raise the sensor in the casing. The upper end of the cable is attached to a readout device that records the inclination of the casing from the vertical. Tilt readings and depth measurements are compared with initial data to determine movements that have occurred. Plastic, aluminum, and steel casing of various sizes and shapes have been successfully used with sheet pile cellular structures. Circular casing with guide grooves and square casing are available from US manufacturers. Casing within the cell fill and in the stabilizing berm are installed in boreholes. Casing connected to sheet pile sections must be attached so that the casing remains undamaged and securely fastened to the sheet pile after the pile has been completely driven to the design depth. In-place inclinometers may be installed to provide continuous or automatic monitoring with alarm capability. In-place inclinometers can be monitored manually or automatically. The manual system consists of one or more sensors, a readout station, and a portable indicator. The automatic system consists of one or more sensors, a junction box, power supply, and data logger. For safety, the alarm option automatically generates an alarm when movement of one of the sensors exceeds a preset threshold.

d. Earth Pressure Measuring Devices. Earth pressure measuring devices fall into two categories. One is designed to measure the total stress at a point in an earth mass and the other is designed to measure the total stress or contact stress against the face of a structural element. Devices in the

latter category are relatively accurate and reliable, provided the device is designed to behave similarly to the structure. In addition, the earth pressures on a structure may be reasonably uniform for the structure as a whole, but are usually very nonuniform over an area the size of a pressure cell. This condition results in a wide scatter of data that is difficult to interpret. Earth pressure measuring devices designed to measure stress at a point in a soil mass are not considered as accurate and as reliable as devices to measure stress against a structure. The main problem centers around the measuring device and the difference in the elastic properties of the surrounding backfill and the mass fill. Devices in this category are still in the development stages. A more complete discussion on earth measuring devices is presented by Sellers and Dunnicliff (item 68) and in EM 1110-2-1908. Earth pressure cells must be inspected and tested for leaks in a water bath prior to installation. The cell should be calibrated while undergoing the leak test and rechecked immediately before and after installation to ensure that the cell is still responsive to pressure change. The earth pressure cell may be installed by bonding the cell to a thin steel plate which is bolted or welded to the sheet pile member. This type of installation will cause the face of the cell to protrude beyond the face of the sheet pile. Attaching the cell such that the face of the cell is flush with the surface of the sheet pile is a more desirable installation. Measures should be taken to protect the leads and transducer from damage during driving.

e. Strain Gages. Several types of strain gages are in common use today. They may be grouped according to the principles by which they operate. Basically, three principles of operations are used: mechanical, electrical resistance, and vibrating wire. The latter two are more common in gages used to monitor sheet pile structures. Each is designed to measure very small changes in length of the structural member at the point of installation. The change in length is converted into stress, load, or bending moment. In cellular structures, strain gages have been used principally to observe interlock tension within sheet pile members. The gages are made such that they can be attached to a surface by means of an epoxy adhesive or by welding. Two types of electrical resistance strain gages are available, including the bonded types and the weldable types. Bonded types are designed to be bonded to the surface of a structural member by means of an adhesive epoxy. The success of this type of gage depends on the surface preparation of the structural members, which should be perfectly clean and dry, the gage bonding, waterproofing of the gage, which is absolutely essential, and the physical housing provided to protect the gage and lead wires. The weldable-type gages are spot welded to the structural surface with a portable welder. The resistance element is bonded or welded to a very thin stainless steel shim stock, which is spot welded to the clean smooth surface of the structural member. The success of this gage depends very much on the same factors as those affecting the success of the bonded-type gage. Vibrating wire strain gages are usually arc welded or spot welded to the surface of the structural member. Gages that are arc welded are bolted into fixed end blocks under the correct tension. The end blocks are arc welded to the structural member at the proper spacing. In gages that are spot welded to the surface, the wire is pretensioned and welded to a shim stock, and the shim stock is spot welded to the surface of the

structural member. Vibrating wire strain gages are equipped with a plucking and cable assembly. This assembly is detachable with most models and can be used with more than one gage if they are in proximity. The vibrating wire strain gage operates on the principle that the natural frequency of a vibrating wire, constrained at both ends, varies with the square root of the tension in the wire. Any change in strain in the member to which the gage is attached is indicated by a change in tension in the wire. The frequency of the wire is determined by plucking the wire and measuring its frequency. Zero drift in vibrating wire strain gages, caused by stretching or creep in the wire or by slippage at the wire grips, has been reduced by heat treating the wire during manufacturing, by keeping the tension in the wire to less than 25 percent of the yield stress, and by using no load gages. Gages with thermistors for temperature measurements are available if temperature measurements are desired. Table 7-1 lists advantages, limitations, and other pertinent information for various types of strain gages used to monitor steel sheet pile structures.

f. Precise Measurement Systems. Horizontal and vertical surface displacement can be detected by making precise measurements of lengths, angles, and alignments between reference monuments and selected points on the structure. These measurements can be grouped into three categories: precise alignment measurement, precise distance and elevation measurements, and triangulation and trilateration surveys. The instruments commonly used to make these measurements include laser transmitters and receivers, precision theodolites and levels, electronic distance measurement instruments, alignment targets and reflectors, and auxiliary equipment. The reference monuments should be set in rock or stable soil, located outside the influence of the construction area, and protected from incidental disturbances. At least two reference monuments, each with a clear line-of-sight to the other and the selected points on the structure, should be installed. The selected points on the structure should be permanently marked such that the exact same points are used during each survey. In addition to the foregoing measurement systems, plumb lines can be used to measure bending, tilting, or deflections of sheet pile structures from external loading, sliding, and deformation of the foundation. A thorough discussion of precise measurement systems is given in EM 1110-2-4300.

7-5. Accuracy of Required Measurements. Accuracy indicates the degree of agreement between the measured value and the true value. It signifies the range the measured value will deviate from the true value. Accuracy is not to be confused with precision or sensitivity. Precision indicates the degree of agreement between repeated measurements of the same quantity and sensitivity represents the smallest quantity observable as a measurement is made. Several factors influence the accuracy of field measurements. Among these factors are the physical features of the device, installation procedures, environmental conditions, conformance of the instrument to the actual changing conditions, data reduction procedures, and observer errors. Accuracy should be verified. This can be done by monitoring two or more systems independently or by using instruments that can be removed, checked and/or recalibrated periodically, and reinstalled. The last will be virtually impossible with many instruments and

Table 7-1

Advantages and limitations of various types of surface-mounted strain gages (item 73)

Gage Type	Advantage	Limitations	Gage Length in.	Range in.	Sensitivity in./in.	System Accuracy in./in.	Reli-ability	Cost
Bonded electrical resistance strain gage	Small size Low cost Remote reading Can be temperature compensated	Needs great skill to install Needs great skill to waterproof Lead wire effects Cable lengths limited to 1,000 feet	0.008 to 6	±20,000	1	5 to 100	Poor to excellent	Low material; high labor
Weldable electrical resistance strain gage	Remote reading Factory waterproofing Easy installation Temperature compensation	Lead wire effects Less accurate than good bonded types	1 to 5	20,000	1	15	Good	Medium
Vibrating wire strain gage (arc welded or bolted to surface)	Remote reading Lead wire effects minimal Factory waterproofing Long history of use Robust, reusable	Small range Large size Cannot measure dynamic strain Sensitive to temperature	5 to 10	± 2,500	1	5	Very good	High
Vibrating wire strain gage (spot weldable to surface)	Remote reading Lead wire effects minimal Factory waterproofing Small size Very easy installation	Small range Cannot measure dynamic strains Sensitive to temperature Weld points need waterproofing	2 to 3	± 2,500	1	5	Good	High

installations. The required accuracy is related to several factors, including: the sensitivity of the structure to the required measurements, the magnitude of the measurements during the observational period, the length of the observational period, and the purpose of the monitoring program. These factors should be carefully considered in connection with the type of sheet pile structure being monitored and the field measurements desired. Generally, the accuracy of most readily available instruments will meet the accuracy requirements for performance evaluation of most monitoring programs, provided the instrument is installed, operated, and maintained in accordance with the manufacturer's recommendations. The accuracy of most instruments can be obtained from the manufacturer's literature. Gould and Dunnicliff (item 34), and Wilson and Mikkelson (item 95) presented tabular data on the accuracy of various measurement methods and instruments common to measuring deformation and pore pressure.

7-6. Collection, Processing, and Evaluation of Data. Data must be collected, processed, and evaluated as expeditiously as possible if the monitoring program is to have any chance of success. Careful attention must be given to whomever will collect the data. This can be the responsibility of the contractor or the owner. In any event, the person collecting the data must have experience or be trained to collect the data. This person must be aware of what constitutes abnormal data, malfunctioning monitoring equipment, and instruments that have been damaged. If the data are to be collected by the contractor, the specifications must be definite regarding who will collect the data, when and how it will be collected, transmitting the data to the owner, processing and evaluating the data, reporting malfunctions, repairing and replacing damaged equipment and instruments, and other factors unique to the monitoring program. A monitoring schedule should be established to provide data that are needed to evaluate the structure under all conditions of concern. The schedule should include special monitoring during critical load phases of the structure. Input by the design engineers will be very helpful in establishing a meaningful monitoring schedule. Initial observations should be made on all instruments immediately after installation. This is base data, and most subsequent data will be compared with this initial data. Collected data should be promptly processed for easy review and evaluation. This can be done manually or by computer technology, if computer facilities and suitable software are readily available. The choice of processing the data by computer or manually should be weighed against the volume of data to be processed, the cost of the computer systems, the personnel available, and the convenience of each method to the people evaluating the data. Regardless of the method chosen, the data should be presented in some graphic form that is readily updated as new data are acquired. Graphic presentation of data helps to establish trends, pinpoint variations, and guards against overlooking important data. Data that have been collected and processed should be promptly evaluated by design engineers and others involved in the design and construction process. The evaluation should include an assessment of the validity of the data, a determination of the existence of any adverse situation that calls for immediate attention, a correlation of the data with other activities, and a comparison of the data with predicted behavior. Care must be taken not to

reject what seems to be abnormal data without due consideration of the factors likely to produce the data.

7-7. Example of Instrumentation. Figures 7-1 through 7-8 illustrate the instrumentation used to monitor the first-stage cofferdam for the replacement of Lock and Dam No. 26 on the Mississippi River. The objective of the program was to monitor the response of the cofferdam during construction and at various stages of loading and evaluate the design assumptions as well as the methods of design and analysis. The results of this program were to be used to develop recommendations for a more cost effective design of the second- and third-stage cofferdams. The intent of these figures is to provide an example of the layout and installation details of the instrumentation used in a practical situation. The details of each monitoring program must be worked out in light of the many factors unique to that program. The monitoring program for Lock and Dam No. 26 was performed under the direction of the US Army Engineer District, St. Louis, by Shannon and Wilson, Inc., St. Louis, Missouri (item 24).

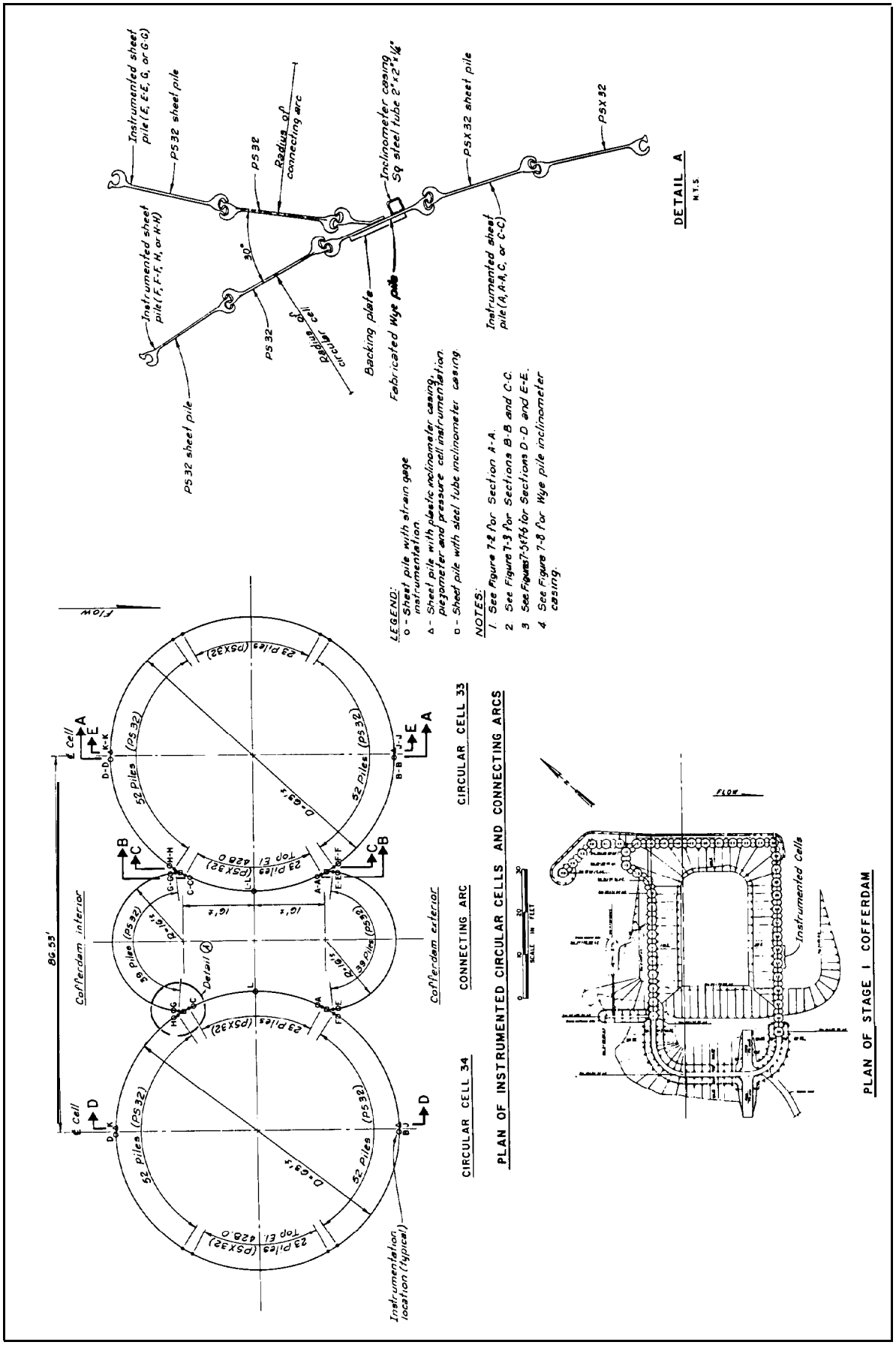

Figure 7-1. Plan of instrumentation

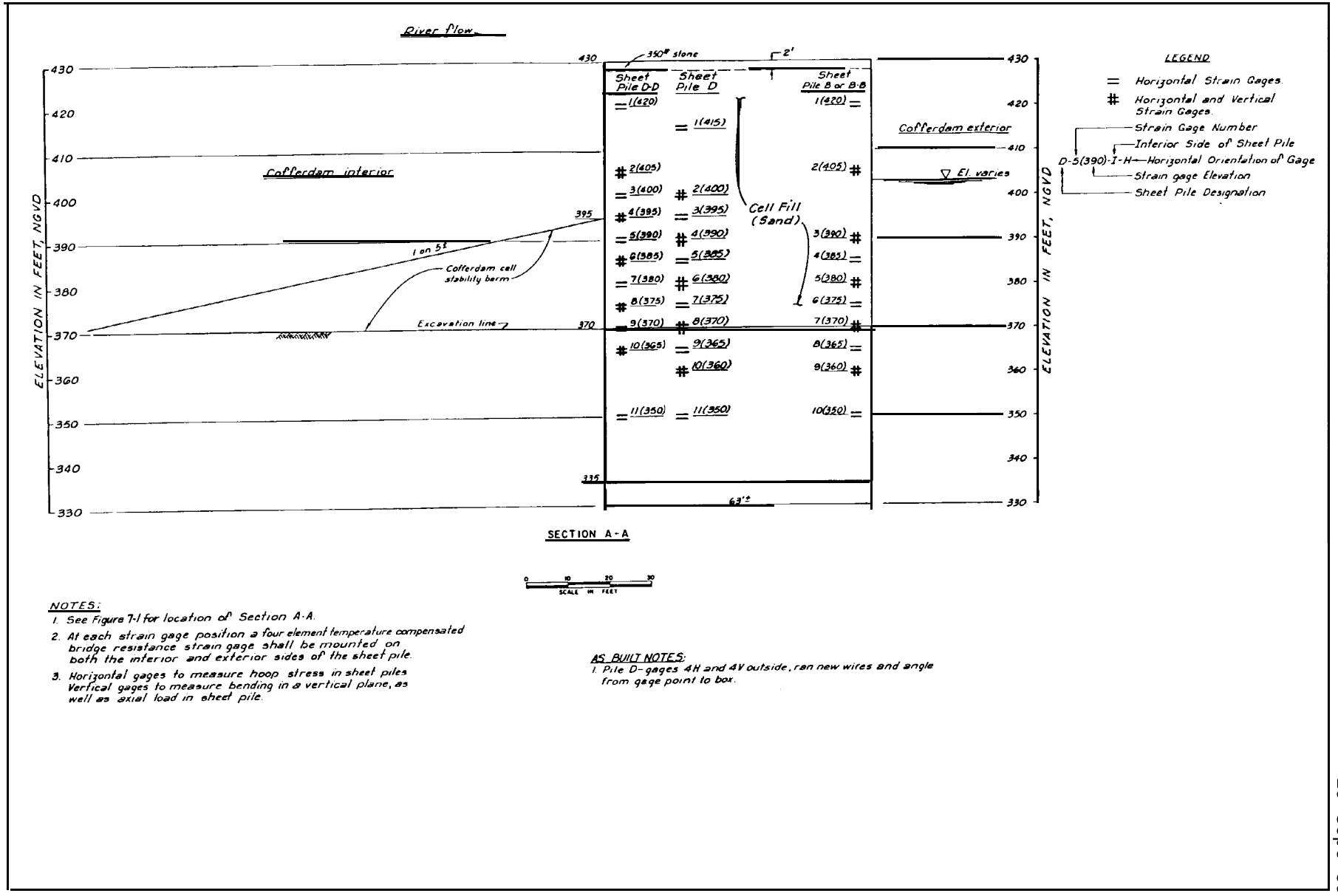

NOTES:
1. See Figure 7-1 for location of Section A-A.
2. At each strain gage position a four element temperature compensated bridge resistance strain gage shall be mounted on both the interior and exterior sides of the sheet pile.
3. Horizontal gages to measure hoop stress in sheet piles. Vertical gages to measure bending in a vertical plane, as well as axial load in sheet pile.

AS BUILT NOTES:
1. Pile D-gages 4H and 4V outside, ran new wires and angle from gage point to box.

Figure 7-2. Strain gage locations

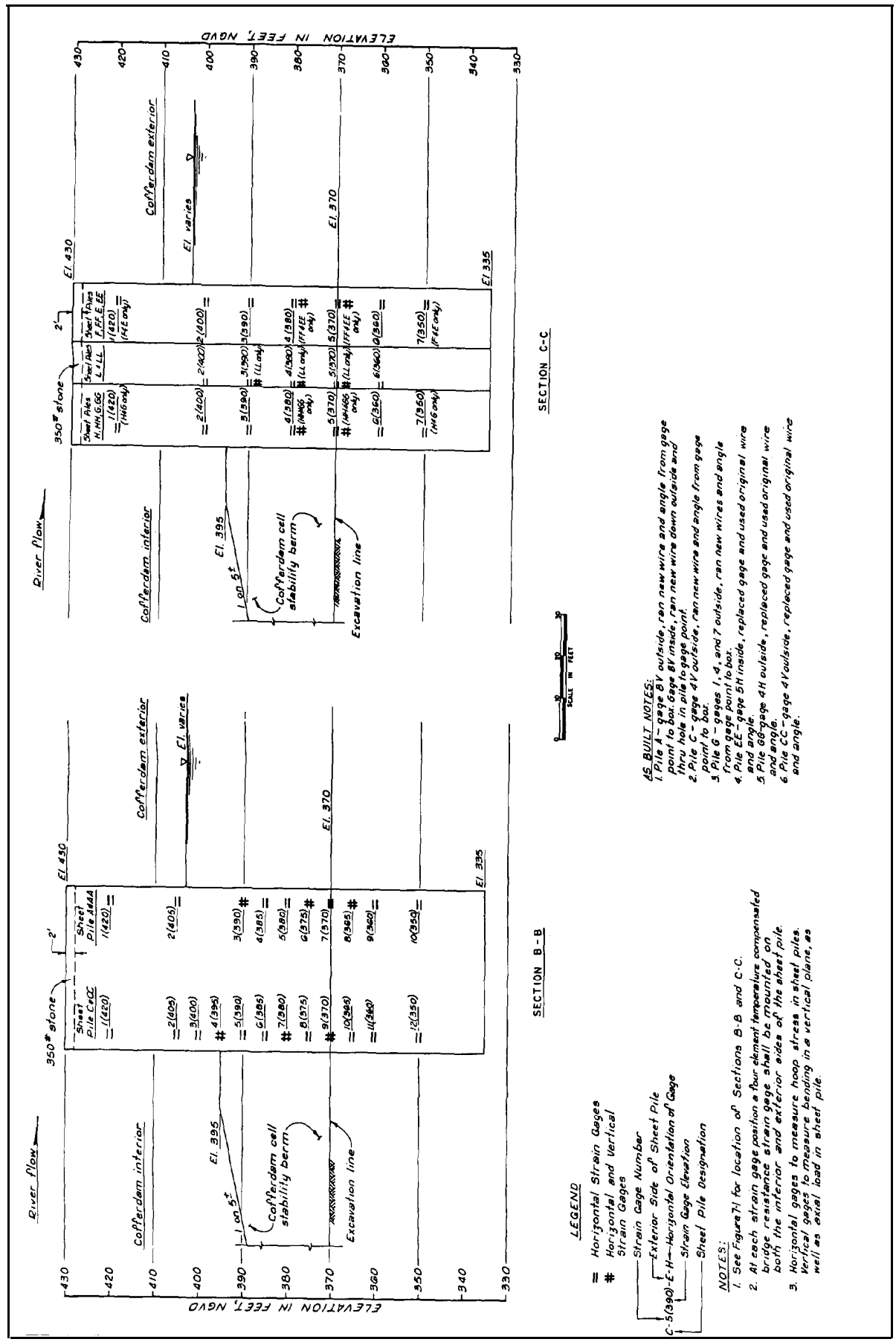

Figure 7-3. Strain gage locations adjacent to wye piles

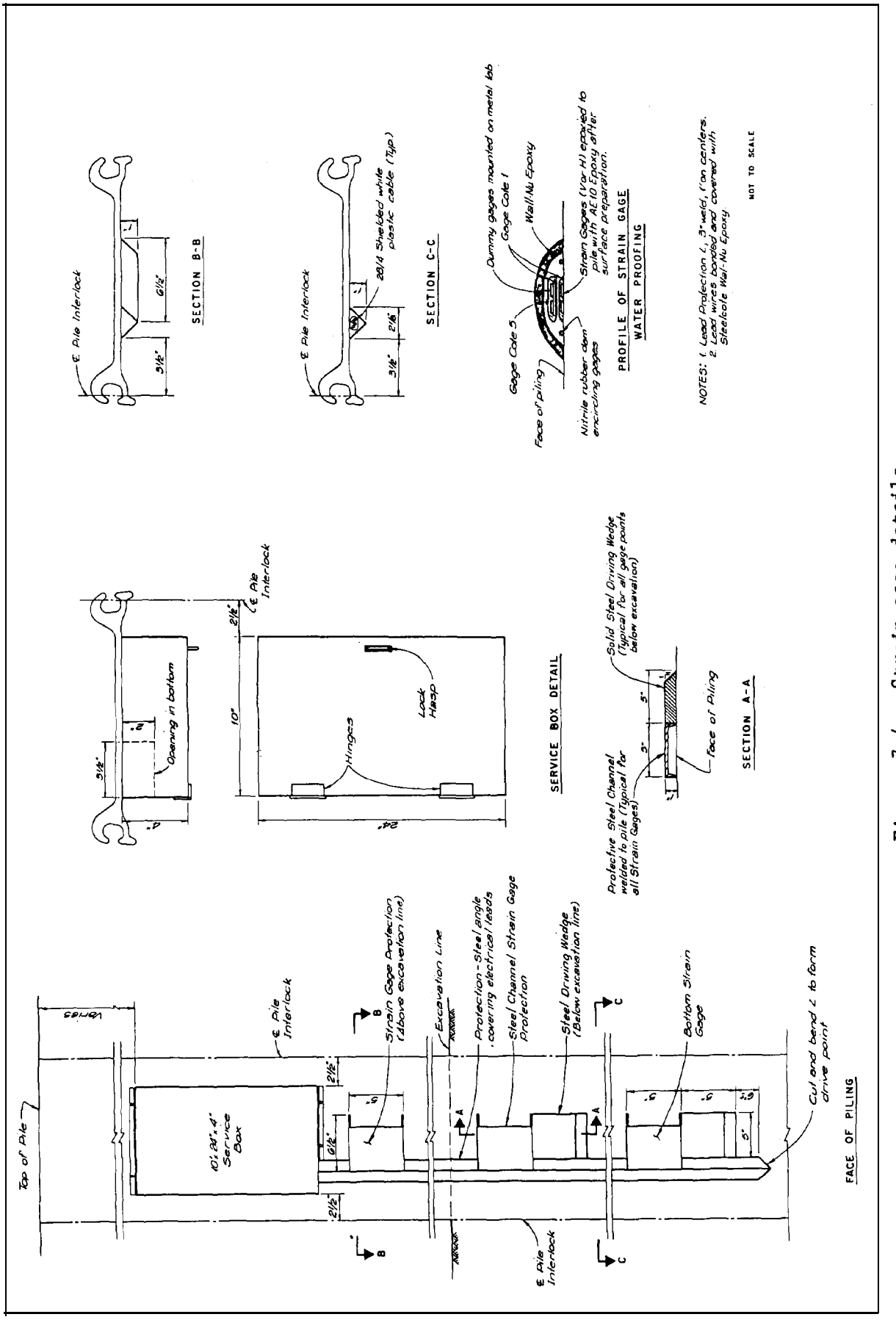

Figure 7-4. Strain gage details

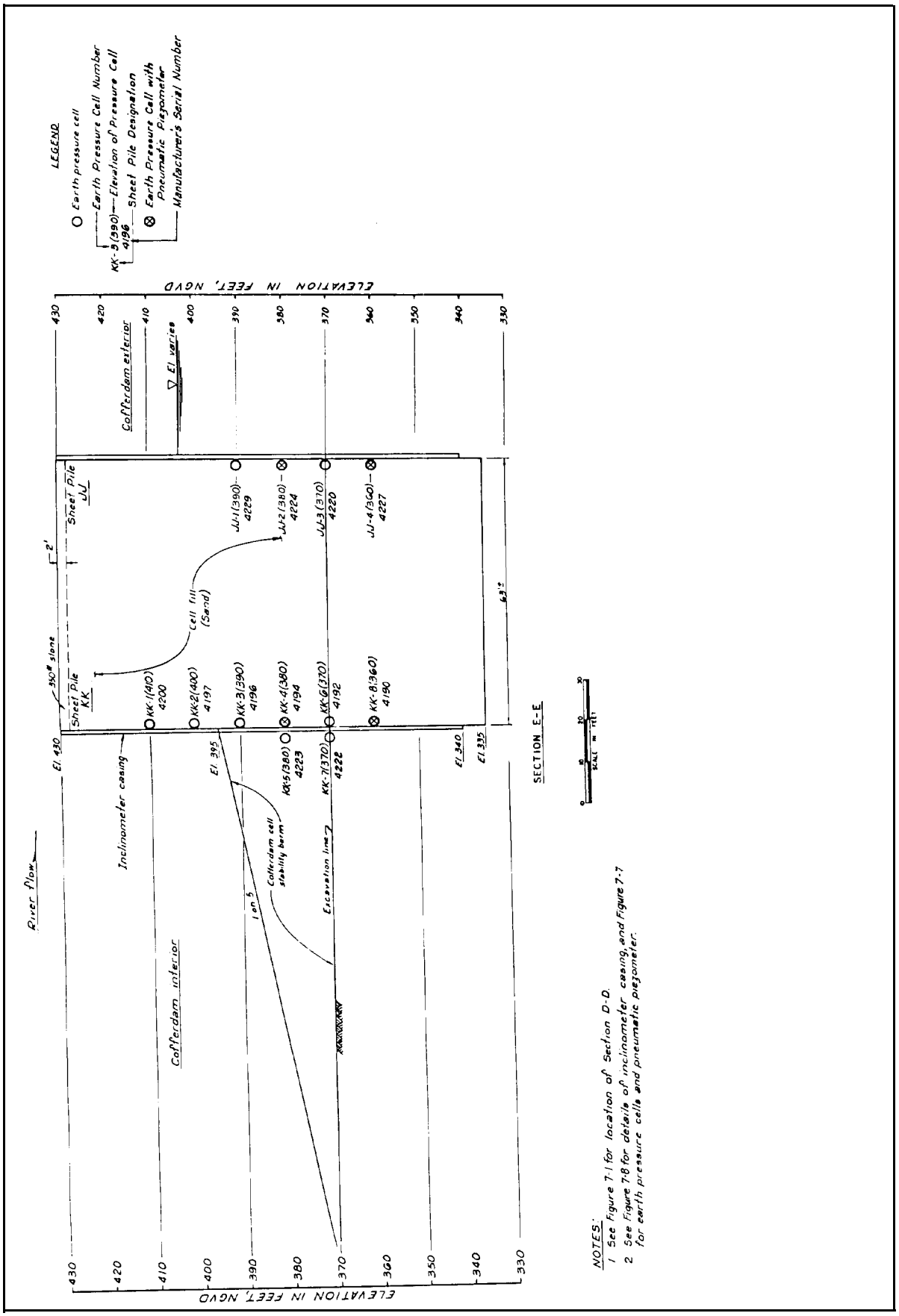

Figure 7-5. Location of earth pressure cells and inclinometers, Section D-D

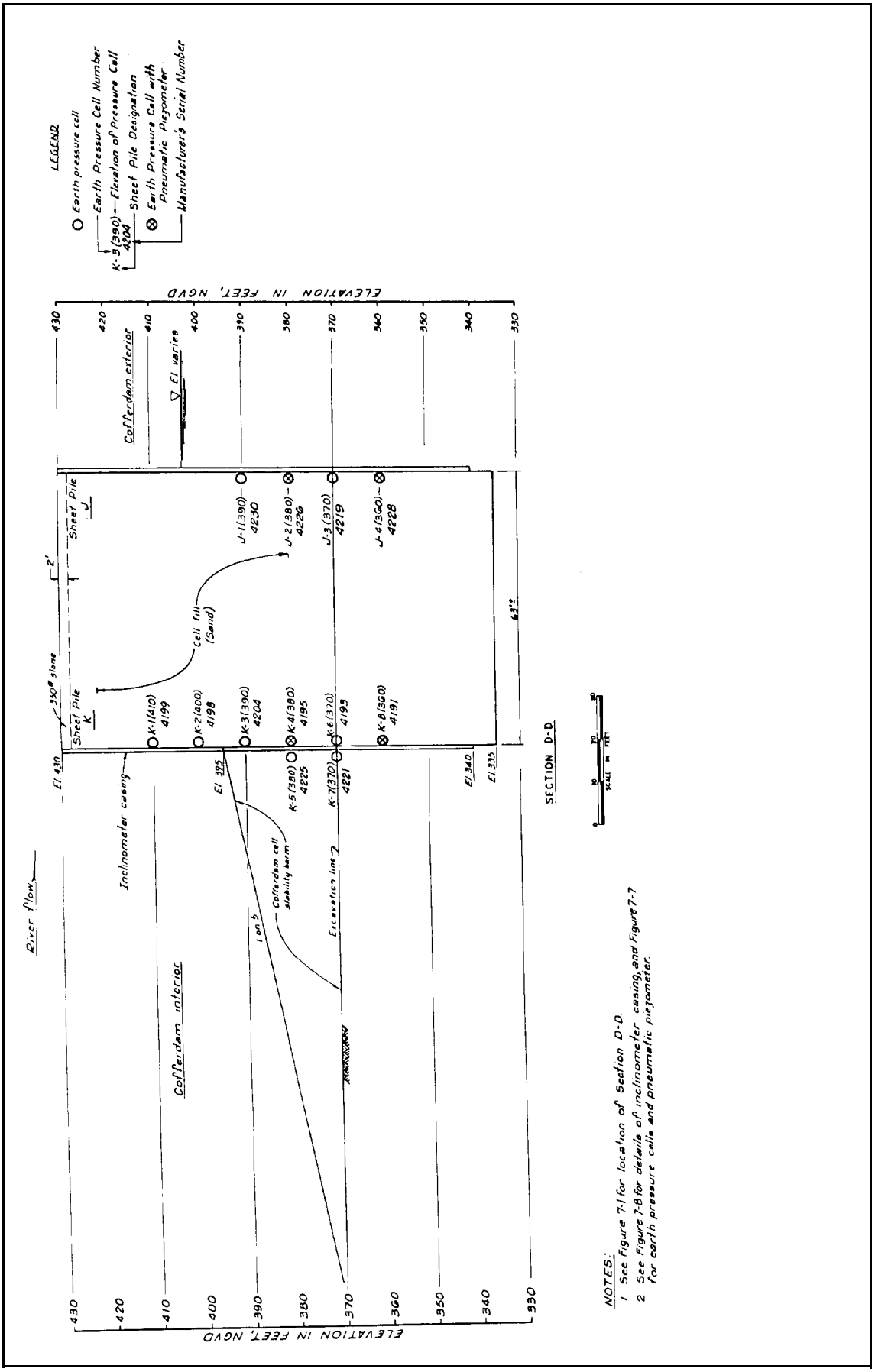

Figure 7-6. Location of earth pressure cells and inclinometers, Section D-D

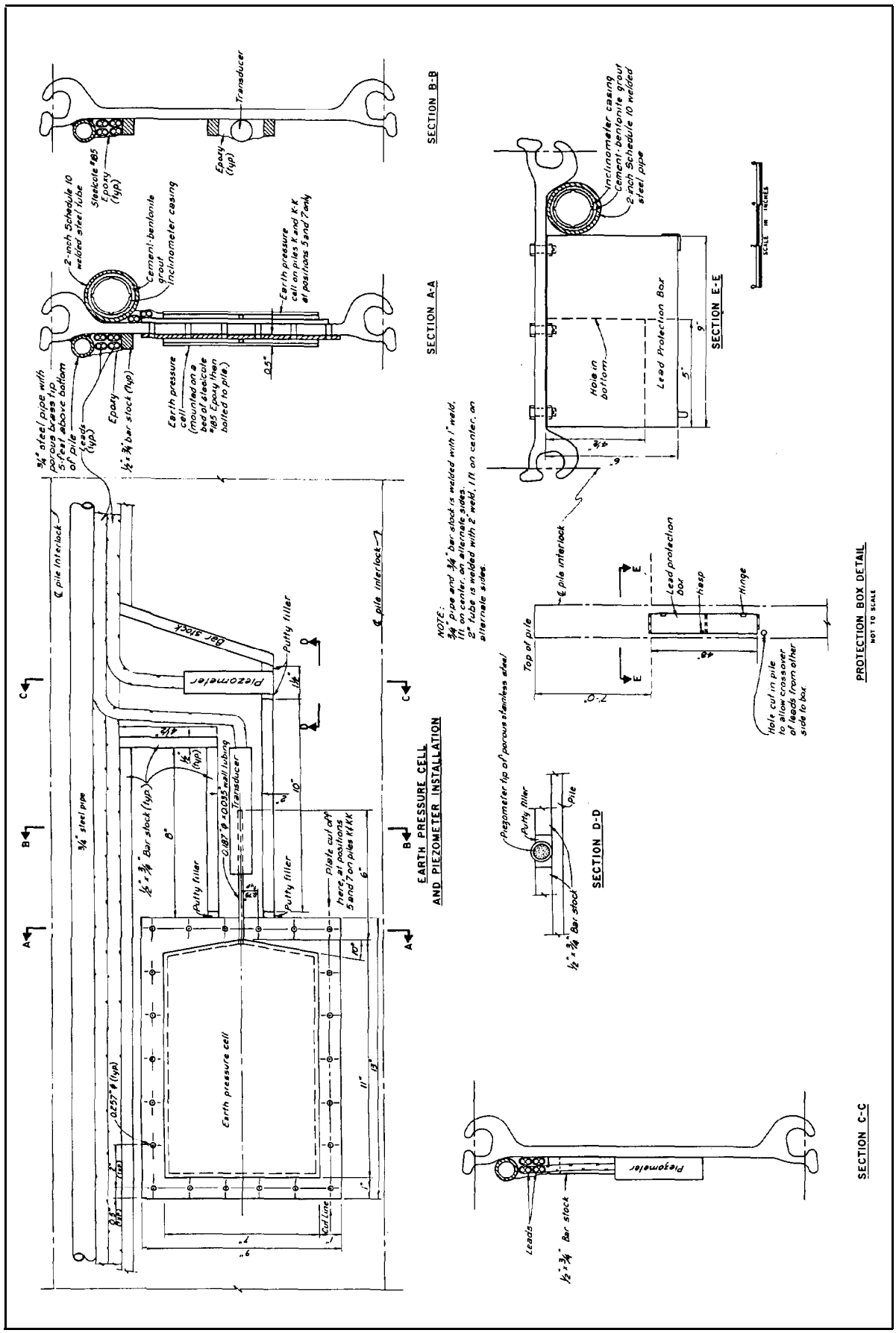

Figure 7-7. Earth pressure cell and piezometer details

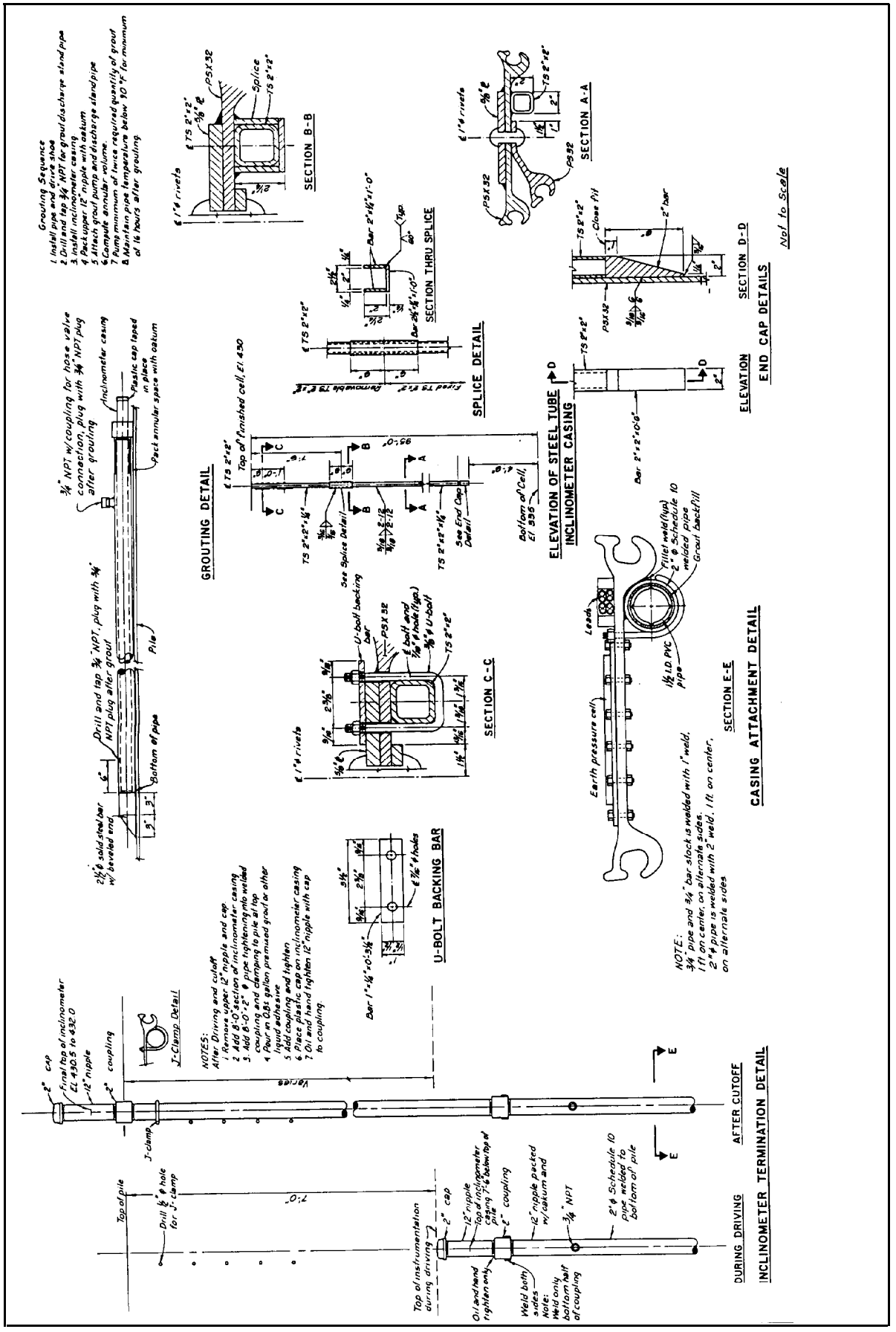

Figure 7-8. Inclinometer casing details