APPENDIX N

STABILITY, BEARING CAPACITY, AND REINFORCEMENT COMPUTATIONS, EXAMPLES

SUMMARY OF EXAMPLES

Example 1, Page N-3

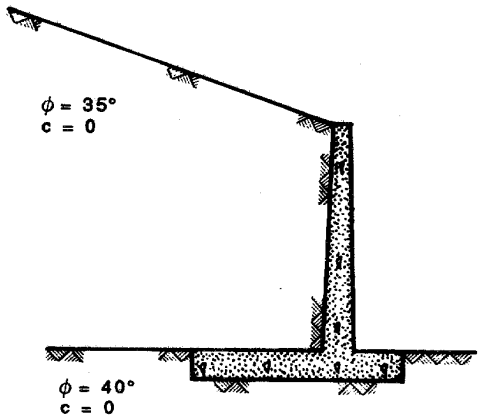

Example 3, Page N-24

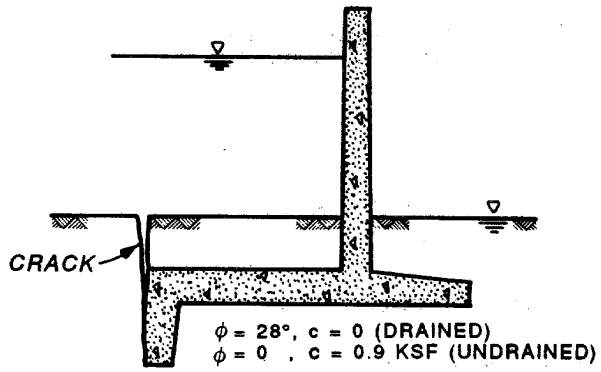

Example 2, Page N-18

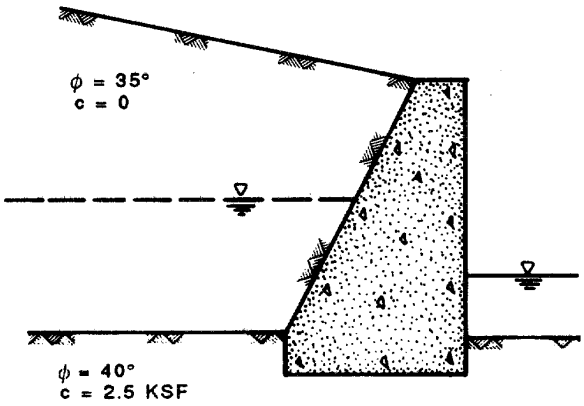

Example 4, Page N-41

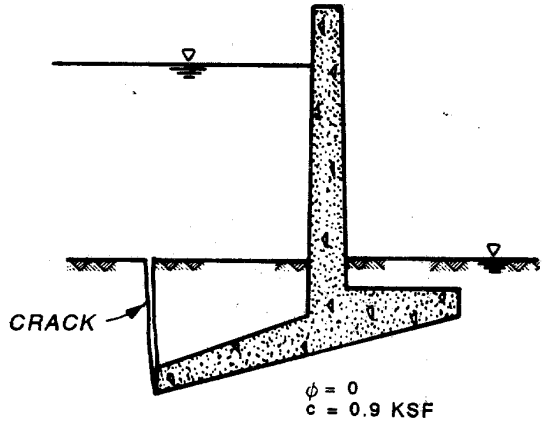

Example 5, Page N-52

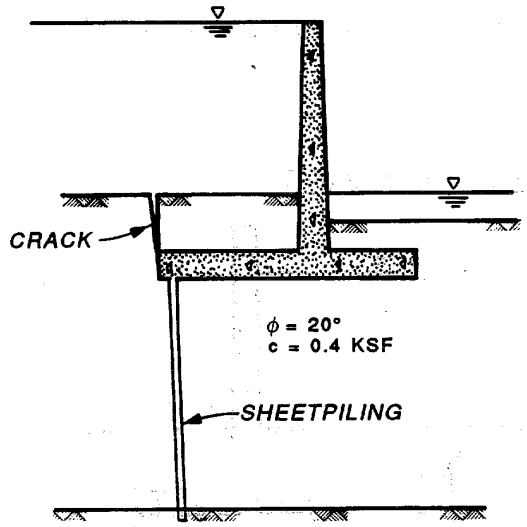

Example 7, Page N-63

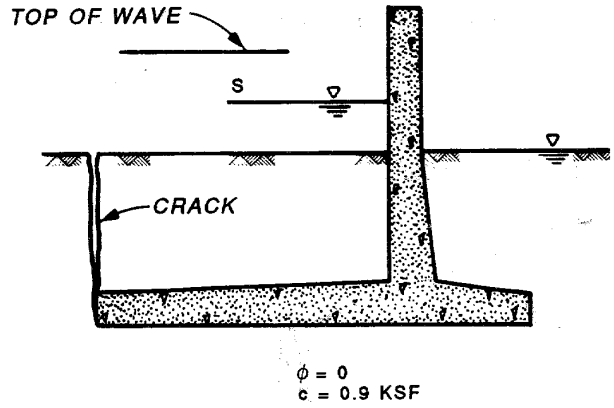

Example 6, Page N-57

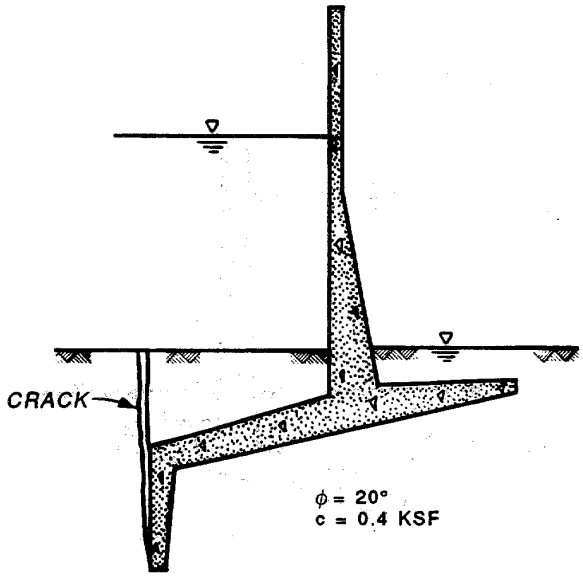

STABILITY, BEARING CAPACITY, AND REINFORCEMENT COMPUTATIONS, EXAMPLES

N-1. EXAMPLE 1. Analyze the wall shown below for stability and bearing capacity. Find the reinforcement required at critical sections. Load Case R1.

Given:

Backfill: $\gamma = 0.120$ kcf, $\phi = 35°$, $c = 0$

Foundation: $\gamma = 0.135$ kcf, $\phi = 40°$, $c = 0$

Reinforced concrete: $\gamma = 0.150$ kcf, $f'_c = 4$ ksi, $f_y = 48$ ksi

All concrete cover = 4.5 in. (to center of gravity of steel)

Load factor = 1.9, $\phi = 0.9$

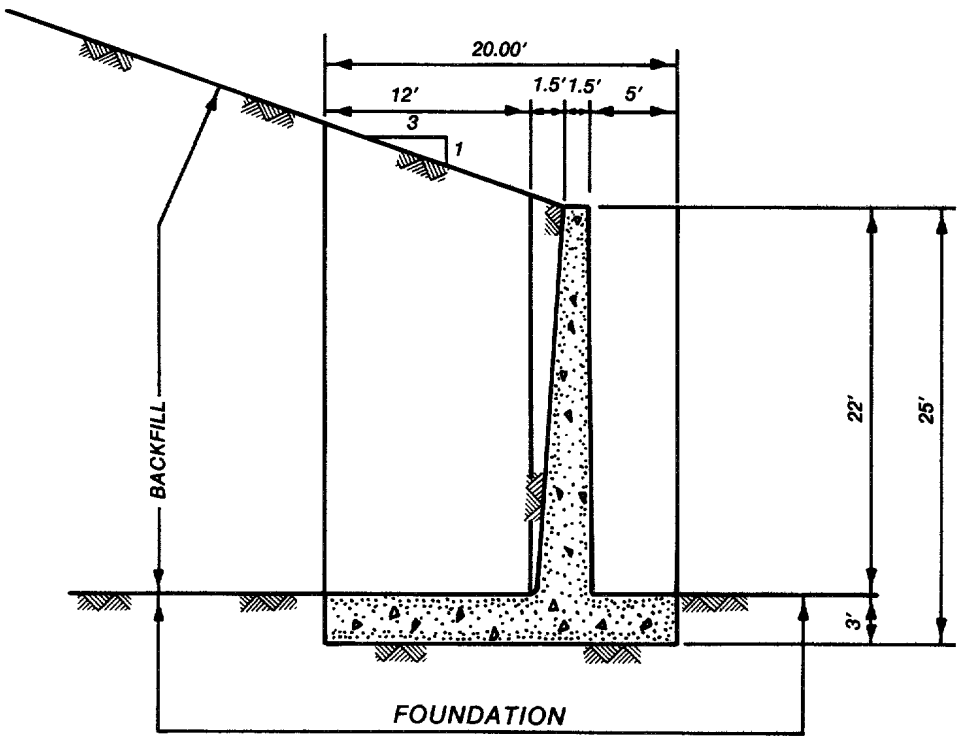

a. Find critical slip-plane angles--driving side.

(1) Foundation (see Appendix G):

$\phi = 40°$, SMF = 2/3 , $\phi_d = \tan^{1} (2/3 \tan \phi) = 29°$

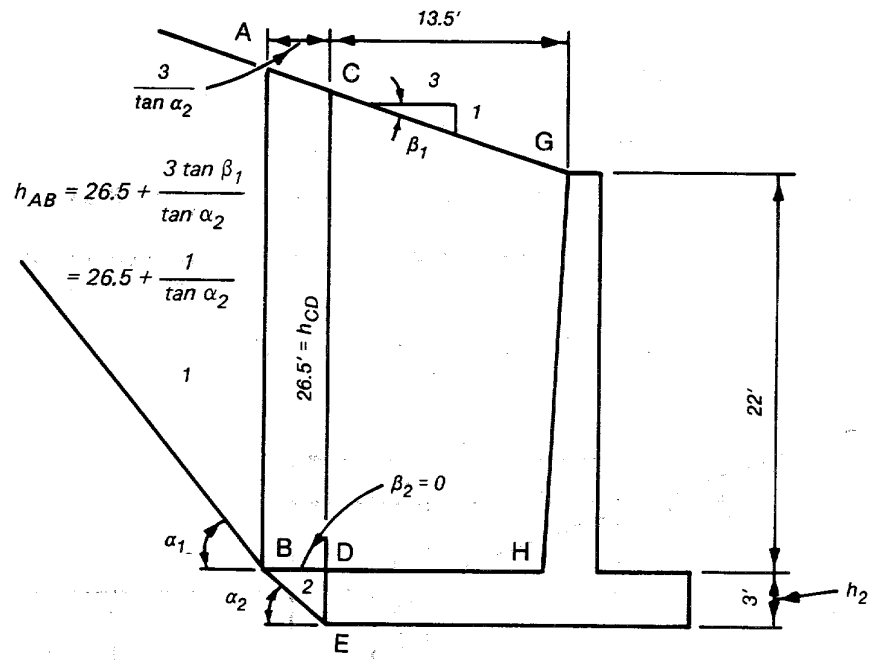

The increased unit weight in the bottom layer (layer 2) is calculated as

$$\gamma' = \frac{2\gamma_1 h_1}{h_2} + \gamma_2 + \frac{2\gamma_1 (\tan \beta_1 - \tan \beta_2)}{\tan \alpha_2 - \tan \beta_2} \qquad [G\text{-}25]$$

$$\gamma' = \frac{2(0.12)(26.5)}{3} + 0.135 + \frac{2(0.12)(1/3)}{\tan \alpha_2} = 2.255 + \frac{0.08}{\tan \alpha_2}$$

$$V_\alpha = \frac{\gamma_1 h_2^2 (\tan \beta_1 - \tan \beta_2)}{2 \left(\tan \alpha_2 - \tan \beta_2\right)^2} \qquad [G\text{-}26]$$

$$V_\alpha = \frac{0.12(3)^2(1/3)}{2\tan^2\alpha_2} = \frac{0.18}{\tan^2\alpha_2}$$

Let $\alpha_2 = 59.5° = 45 + \frac{\phi_d}{2}$,

$$\gamma' = 2.255 + \frac{0.08}{1.697663} = 2.302 ,$$

$$V_\alpha = \frac{0.18}{(1.697663)^2} = 0.0625$$

From Equation G-27 (omitting the c term)

$$A' = \tan\phi_d - \frac{2V_\alpha\left(1 + \tan^2\phi_d\right)}{\gamma' h_2^2}$$

$$A' = 0.554309 - \frac{2(0.0625)(1.307259)}{2.302(3)^2} = 0.546422$$

From Equation G-28 (omitting the c term)

$$c_1' = \left[2\tan^2\phi_d - \frac{4V_\alpha\tan\beta_2\left(1 + \tan^2\phi_d\right)}{\gamma' h_2^2}\right] \div A'$$

$$c_1' = 2(0.554309)^2 \div 0.546422 = 1.12462$$

From Equation G-29 (omitting the c term)

$$c_2' = \frac{\tan\phi_d\left(1 - \tan\phi_d \tan\beta_2\right) - \tan\beta_2 + \dfrac{2V_\alpha \tan^2\beta_2\left(1 + \tan^2\phi_d\right)}{\gamma' h_2^2}}{A'}$$

$$c_2' = 0.554309 \div 0.546422 = 1.01443$$

$$\alpha_2 = \tan^{-1}\left(\frac{c_1' + \sqrt{c_1'^2 + 4c_2'}}{2}\right) = 59.77° \neq 59.5° \qquad \text{[G-30]}$$

Let $\alpha_2 = 59.73°$, $\gamma' = 2.302$, $V_\alpha = 0.061$

$$A' = 0.554309 - \frac{2(0.061)(1.307259)}{2.302(3)^2} = 0.546611$$

$$c_1' = 2(0.554309)^2 \div 0.546611 = 1.124231$$

$$c_2' = 0.554309 \div 0.546611 = 1.014083$$

$\alpha_2 = 59.76°$ 59.73° (close enough)

$\alpha_2 = \underline{\underline{59.76°}}$

(2) Backfill:

$$h_{AB} = 26.5 + \frac{3\tan\beta_1}{\tan\alpha_2} = \underline{\underline{27.083\text{ ft}}}, \quad \phi = 35°$$

$$\tan\phi_d = \tan^{-1}(2/3\tan\phi) = 25°$$

$$c_1 = 2\tan\phi_d = 2(0.466308) = 0.932616 \qquad \text{[3-26]}$$

$$c_2 = 1 - \tan \phi_d \tan \beta_1 - \frac{\tan \beta_1}{\tan \phi_d} \qquad [3\text{-}27]$$

$$c_2 = 1 - 0.466308\left(\frac{1}{3}\right) - \frac{\frac{1}{3}}{0.466308} = 0.129729$$

$$\alpha_1 = \underline{\underline{46.55°}} \qquad [3\text{-}25]$$

b. <u>Earth pressure coefficients (see Appendix H)</u>.

(1) Backfill:

$$K_1 = \frac{1 - \tan \phi_d \cot \alpha_1}{1 + \tan \phi_d \tan \alpha_1} \cdot \frac{\tan \alpha_1}{\tan \alpha_1 - \tan \beta_1}$$

$$K_1 = \frac{1 - 0.466308 \times 0.947307}{1 + 0.466308 \times 1.055624} \cdot \frac{1.055624}{1.055624 - \frac{1}{3}} = \underline{\underline{0.5468}}$$

(2) Foundation:

$$K = \frac{1 - \tan \phi_d \cot \alpha_2}{1 + \tan \phi_d \tan \alpha_2} = \frac{1 - 0.554309 \times 0.582949}{1 + 0.554309 \times 1.715416} = \underline{\underline{0.3470}}$$

$$K_v = K \tan \alpha_2 = \underline{\underline{0.5952}}$$

c. <u>Lateral pressure and forces on Surfaces AB and DE</u>.

$$P_{AB} = \frac{1}{2} K_1 \gamma_1 h_{AB}^2 = \frac{1}{2} (0.5468)(0.12)(27.083)^2 = \underline{\underline{24.06 \text{ kips}}}$$

Surface DE:

$$P_{DE} = \frac{1}{2} K\gamma_2 h_2^2 + K_v V$$

$$V = \frac{1}{2} (h_{AB} + h_{CD})(\gamma_1)\left(\frac{3}{\tan \alpha_2}\right)$$

$$V = \frac{1}{2} (27.083 + 26.5)(0.12)\left(\frac{3}{1.715416}\right) = 5.623 \text{ kips}$$

$$P_{DE} = \frac{1}{2} (0.347)(0.135)(3)^2 + 0.5952(5.623) = 3.5576 \text{ kips}$$

$$p_B = K_1\gamma_1 h_{AB} = 0.5468(0.12)(27.083) = 1.7771 \text{ ksf}$$

$$p_D = K\gamma_1 h_{CD} = 0.3470(0.12)(26.5) = 1.1035 \text{ ksf}$$

$$P_{DE} = \left(\frac{p_D + p_E}{2}\right) h_2$$

$$p_E = \frac{2P_{DE}}{h_2} - p_D$$

$$p_E = \frac{2(3.5576)}{3} - 1.1035$$

$$p_E = 1.2683 \text{ ksf}$$

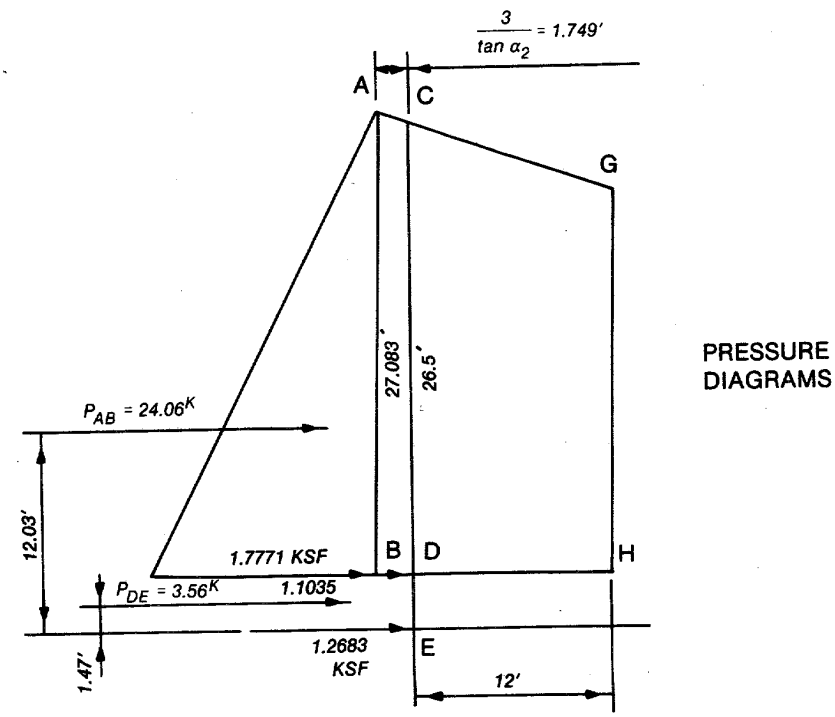

d. Shear force on structural wedge (paragraphs 4-8c, 9-7a).

(1) The horizontal force P_{AB} will be considered to act on any vertical plane in the soil that lies on Surface AB, or on any surface to the right of Surface AB, such as surfaces CD or GH.

(2) In order for the body of soil lying between CD and GH to be in equilibrium, a small vertical shear will be assumed to act on vertical surfaces along with the horizontal force P_{AB} .

(3) The value of this shear force is found from a free body of any block of soil as shown on the following page:

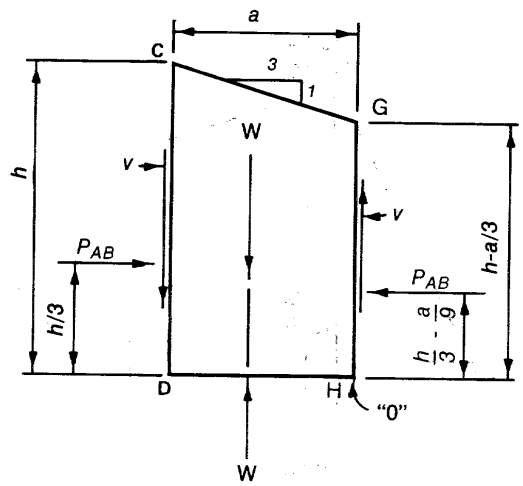

$$\Sigma M_o = 0 = P_{AB}\left[\frac{h}{3} - \left(\frac{h}{3} - \frac{a}{9}\right)\right] - va$$

$$va = P_{AB}\left(\frac{a}{9}\right), \quad \underline{\underline{v = \frac{P_{AB}\tan\beta}{3} = \frac{P_{AB}}{9} = \frac{24.06}{9} = 2.673 \text{ kips}}}$$

e. <u>Weight and center of gravity of structural wedge</u>.

1.5 ft x 22 ft x 0.15 kcf = 4.95 x 5.75 ft = 28.46 kips
$\frac{1}{2}$ x 1.5 ^Cft x 22 ft x 0.15 kcf = 2.48 x 7.00 ft = 17.36 kips
20 ft x 3 ft x 0.15 kcf = 9.00 x 10.00 ft = 90.00 kips
Concrete = 16.43 k/ft 135.82 ÷ 16.43 = 8.27 ft = $\bar{x}$

$\frac{1}{2}$ x 13.5 ft x 4.5 ft x 0.12 kcf = 3.65 x 15.50 ft = 56.58
12 ft x 22 ft x 0.12 kcf = 31.68 x 14.00 ft = 443.52
$\frac{1}{2}$ x 1.5 ft x 22 ft x 0.12 kcf = 1.98 x 7.50 ft = 14.85
Soil = 37.31 k/ft 514.95 ÷ 37.31 = 13.80 ft
= $\bar{x}$

f. Overturning stability (paragraph 4-8).

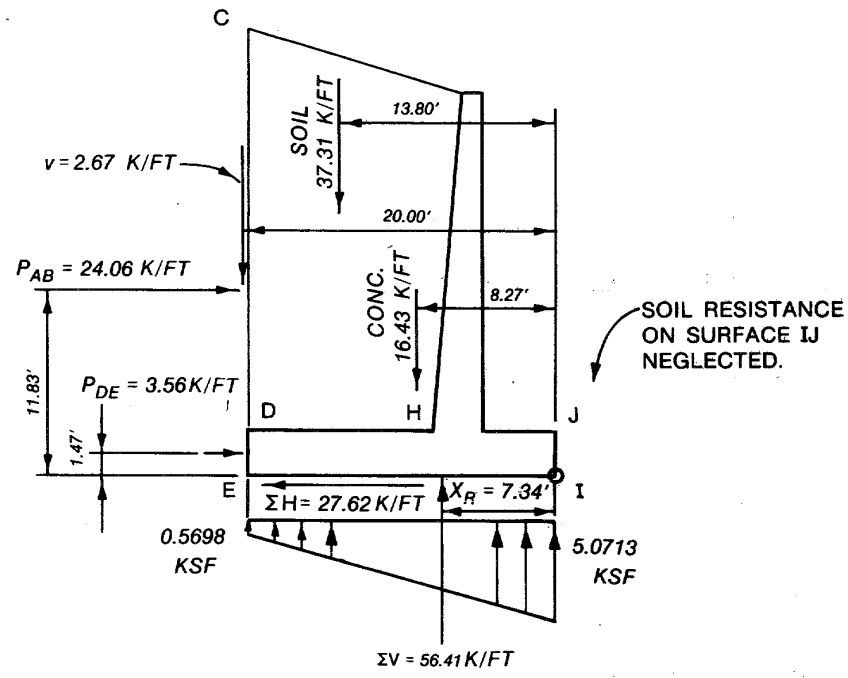

$$\begin{array}{rcl} 2.67 \text{ kips} \times 20.00 \text{ ft} &=& 53.400 \text{ ft-kips} \\ 37.31 \text{ kips} \times 13.80 \text{ ft} &=& 514.878 \text{ ft-kips} \\ \underline{16.43} \text{ kips} \times 8.27 \text{ ft} &=& 135.876 \text{ ft-kips} \\ 56.41 = \Sigma V & & \end{array}$$

$$x_R = \frac{414.291}{56.41} = 7.34 \text{ ft}$$

$$\begin{array}{rcl} -24.06 \times 11.83 &=& -284.630 \\ \underline{-\ 3.56} \times 1.47 &=& \underline{-5.233} \\ -27.62 = \Sigma H & & 414.291 = \Sigma M_I \end{array}$$

One hundred percent of base is in compression, overturning stability requirement is satisfied.

g. Sliding stability analysis (paragraph 4-15).

$N' = \Sigma V = 56.41$ kips, $T = \Sigma H = 27.62$ kips

$$T \leq \frac{N' \tan \phi + cL}{FS} \qquad [4\text{-}12]$$

Using the minimum FS of 1.5 from Table 4-1 yields

$$27.62 \leqq \frac{56.41 \tan 40° + 0\ (20)}{1.5}$$

$$27.62 \leqq 31.56$$

Sliding stability requirement is satisfied.

h. Check bearing capacity (Chapter 5).

$$\delta = \tan^{-1}\left(\frac{27.62}{56.41}\right) = 26° = 0.4538 \text{ rad} \qquad \text{(Figure 5-1(a))}$$

$$e = \frac{B}{2} - x_R = \frac{20}{2} - 7.34 = 2.66 \text{ ft}$$

$$\overline{B} = B - 2e = 20 - 2(2.66) = 14.68 \text{ ft}$$

$$q_o = \gamma_D = 0.135(3) = 0.405 \text{ ksf} \qquad [5\text{-}8a]$$

$$\xi_{qi} = \left(1 - \frac{\delta}{90}\right)^2 = 0.5057 \qquad [5\text{-}5a]$$

$$\xi_{\gamma i} = \left(1 - \frac{\delta}{\phi}\right)^2 = \left(1 - \frac{26}{40}\right)^2 = 0.1225 \qquad [5\text{-}5b]$$

$$N_q = 64.20\ , \quad N_\gamma = 93.69 \qquad \text{(Table 5-1)}$$

Using Equation 5-2 yields

$$Q = \overline{B}\left(\xi_{qi} q_o N_q + \frac{\xi_{\gamma i}\ \overline{B}\gamma N_\gamma}{2}\right)$$

$$Q = 14.68\left[0.5057(0.405)(64.20) + \frac{0.1225(14.68)(0.135)(93.69)}{2}\right]$$

$$Q = 359.97 \text{ kips}$$

For this problem $\Sigma V = N'$. The factor of safety is calculated as

$$FS = \frac{Q}{N'} = \frac{359.97}{56.41} = 6.38 > 3.00 \qquad [5\text{-}1]$$

Bearing capacity requirement is satisfied (Table 4-1).

i. Reinforcement at base of stem (Chapter 9). Neglect vertical shear component V .

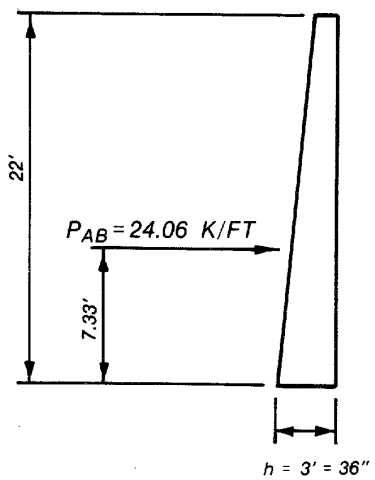

$$M = 24.06(7.33 \text{ ft}) = 176.36 \text{ k-ft}$$

$$k_u = 1 - \sqrt{1 - \frac{\frac{M_u}{\phi}}{0.425f'_c bd^2}}\ , \quad \text{(Figure 9-2)}$$

$$\frac{M_u}{\phi} = \frac{1.9(176.36)(12)}{0.90} = 4{,}468 \text{ k-in.}$$

$$b = 12 \text{ in.}, \quad d = h - 4.5 = 31.5 \text{ in.}$$

$$0.425f'_c bd^2 = 0.425(4)(12)(31.5)^2 = 20{,}241.9$$

$$k_u = 1 - \sqrt{1 - \frac{4{,}468}{20{,}241.9}} = 0.1174$$

$$C_u = T_u = 0.85f'_c k_u bd$$

$$C_u = T_u = 0.85(4)(0.1174)(12)(31.5)$$

$$= 150.88 \text{ kips}$$

$$A_s = \frac{T_u}{f_y} = \frac{150.88}{48} = \underline{\underline{3.14 \text{ in.}^2/\text{ft}}}$$

Check if ductility requirement of $\rho_{min} \leq \rho \leq \rho_{max}$ is satisfied:

$$\rho_{max} = \lambda\rho_b \ , \quad \lambda = 0.25 \quad \text{(paragraph 9-8b(3))}$$

$$\rho_{min} = 200/f_y = 200/48{,}000 = 0.00417 \quad \text{(paragraph 9-8b(4), from ACI 318)}$$

The reinforcement ratio ρ_b in the balanced condition may be obtained by applying equilibrium and compatibility conditions. From the linear strain condition shown below:

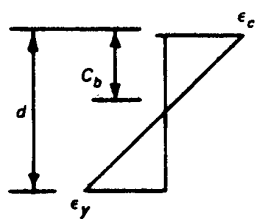

$$\frac{c_b}{d} = \frac{\varepsilon_c}{\varepsilon_c + \varepsilon_y} = \frac{0.003}{0.003 + \dfrac{f_y}{29{,}000 \text{ ksi}}}$$

The compressive force C is

$$C = 0.85f'_c\beta_1 bc_b$$

The tensile force is

$$T = f_y A_{sb} = \rho_b bdf_y$$

Equating C to T yields

$$0.85f'_c b\beta_1 c_b = \rho_b bdf_y$$

$$\rho_b = \frac{0.85f'_c}{f_y}\beta_1\frac{c_b}{d} = \frac{0.85f'_c}{f_y}\beta_1\left(\frac{\varepsilon_c}{\varepsilon_c + \dfrac{f_y}{29{,}000 \text{ ksi}}}\right)$$

$$\beta_1 = 0.85 \ , \quad \varepsilon_c = 0.003 \quad \text{(for nonhydraulic structure, paragraph 9-8e)}$$

$$\rho_b = \frac{0.85(4)}{48}(0.85)\left(\frac{0.003}{0.003 + \frac{48}{29{,}000}}\right) = 0.03880$$

$$\rho_{max} = 0.25(0.03880) = 0.009700$$

$$\rho = \frac{A_s}{bd} = \frac{3.14}{12(31.5)} = 0.008307$$

$$0.00417 < \rho = 0.008307 < 0.009700$$

Ductility is adequate.

j. Reinforcement in heel at face of stem.

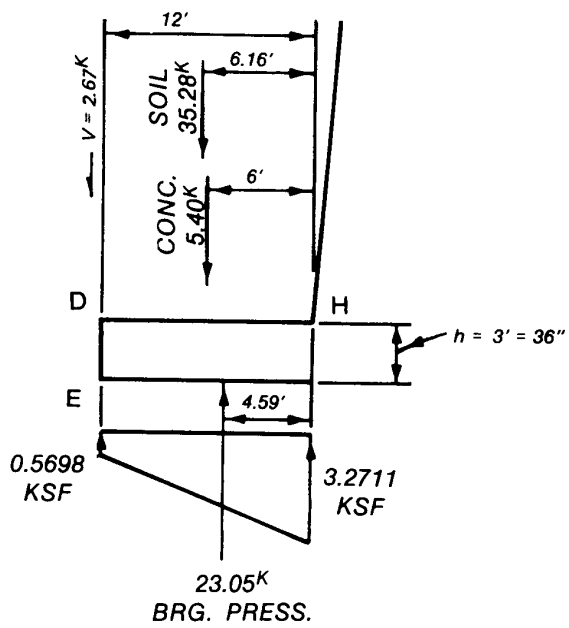

2.67	×	12.00	=	32.04
35.28	×	6.16	=	217.32
5.40	×	6.00	=	32.40
-23.05	×	4.59	=	-105.80
			M =	175.96 k-ft

From Figure 9-2

$$\frac{M_u}{\phi} = \frac{1.9(175.96)(12)}{0.9} = 4{,}458 \text{ k-in.}$$

$b = 12$ in., $d = 36 - 4.5 = 31.5$ in.

$$0.425f'_c bd^2 = 20{,}241.9$$

$$k_u = 1 - \sqrt{1 - \frac{4{,}458}{20{,}241.9}} = 0.1170$$

$$C_u = T_u = 0.85(4)(0.1170)(12)(31.5)$$

$$= 150.37 \text{ kips}$$

$$A_s = \frac{150.37}{48} = \underline{\underline{3.13 \text{ in.}^2/\text{ft}}}$$

Check ductility:

$$\rho_{max} = 0.009700 \ , \quad \rho_{min} = 0.00417$$

$$\rho = \frac{A_s}{bd} = \frac{3.13}{12(31.5)} = 0.008280$$

$$0.00417 < \rho = 0.008280 < 0.009700$$

Ductility is adequate.

k. Reinforcement in toe at face of stem.

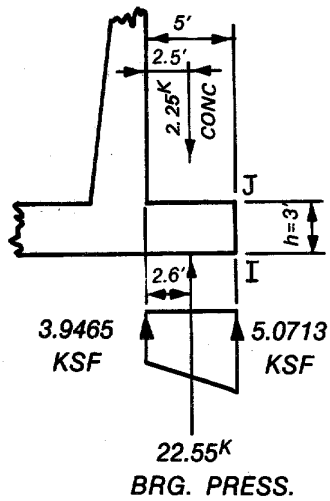

$$22.55 \times 2.60 = 58.63$$
$$-2.25 \times 2.50 = \underline{-5.625}$$
$$M = 53.01 \text{ k-ft}$$

From Figure 9-2

$$\frac{M_u}{\phi} = \frac{1.9(53.01)(12)}{0.9} = 1{,}342.8 \text{ k-in.}$$

$$b = 12 \text{ in.}, \quad d = 36 \text{ in.} - 4.5 = 31.5 \text{ in.}$$

$$0.425 f'_c bd^2 = 20{,}241.9$$

$$k_u = 1 - \sqrt{1 - \frac{1{,}342.8}{20{,}241.9}} = 0.0337$$

$$C_u = T_u = 0.85(4)(0.0337)(12)(31.5)$$
$$= 43.31 \text{ kips}$$

$$A_s = \frac{43.31}{48} = \underline{\underline{0.90 \text{ in.}^2/\text{ft}}}$$

Check ductility:

$$\rho_{max} = 0.02910 \ , \quad \rho_{min} = 0.00417$$

$$\rho = \frac{A_s}{bd} = \frac{0.90}{12(31.5)} = 0.002381$$

$$0.00417 < \rho = 0.002381 < 0.009700$$

Ductility is adequate.

1. Shear check (paragraph 9-8f). The shear capacity of the concrete will be checked at a distance d from the base of the stem according to ACI 318.

$$d_v = 31.5 - \frac{1.5}{22} d_v \ , \quad 1.06818\ d_v = 31.5$$

d_v = 29.5 in. = 2.46 ft (member depth for shear at distance d_v above base)

Since the shear has a quadratic variation, the shear at distance d_v can be calculated as shown below.

$$V = \frac{(22 - 2.46)^2}{(22)^2} (24.06) = 18.98 \text{ kips}$$

$$V_u = 1.9(18.98) = 36.06 \text{ kips}$$

$$\phi V_c = (0.85)(2)\sqrt{f'_c}\, bd_v \qquad \text{(from ACI 318)}$$

$$\phi V_c = (0.85)(2)\sqrt{4{,}000}(12)(29.5) = 38{,}061 \text{ lb} > V_u$$

Check the shear capacity of the heel at the base of the stem:

$$V = 2.67 + 5.40 + 35.28 - 23.05 = 20.3 \text{ kips}$$

$$V_u = 1.9\ (20.3) = 38.57 \text{ kips}$$

$$\phi V_c = (0.85)(2)\sqrt{f'_c}\, bd_v$$

$$\phi V_c = (0.85)(2)\sqrt{4{,}000}\ (12)(31.5) = 40{,}642 \text{ lb} > V_u$$

N-2. EXAMPLE 2. Analyze the wall below for overturning, sliding and bearing capacity. Case R2, unusual loading condition.

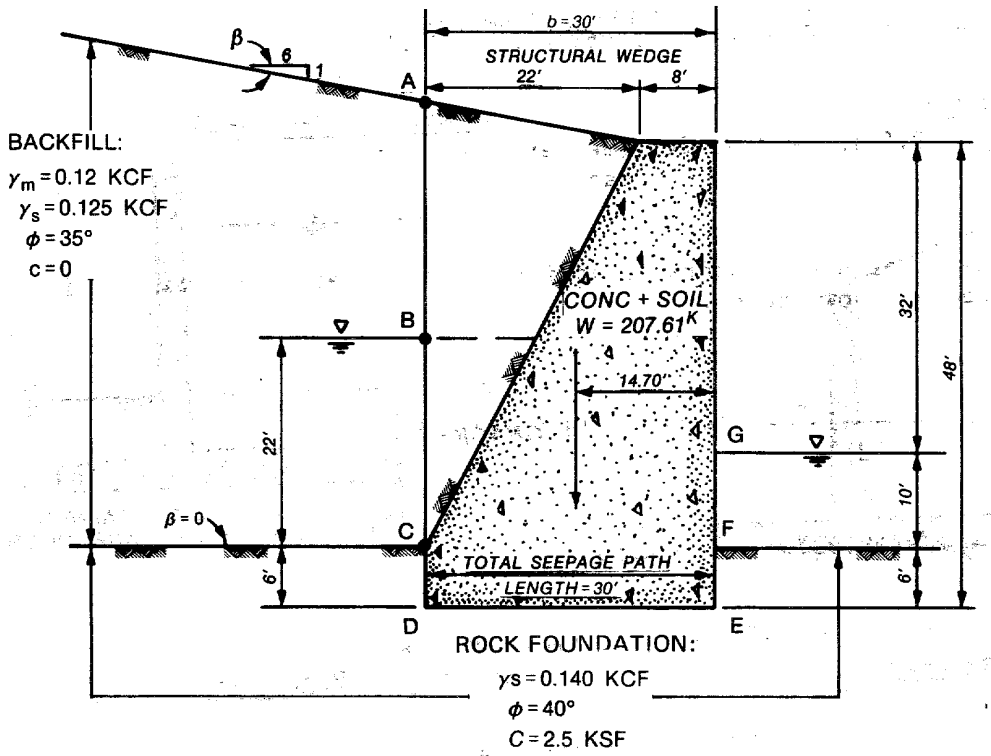

a. Driving side lateral pressure coefficients.

(1) Foundation:

$$SMF = \frac{2}{3}, \quad \phi_d = \tan^{-1}\left(\frac{2}{3}\tan\phi\right) = 29.22°$$

$$K = \tan^2\left(45° - \frac{\phi_d}{2}\right) = 0.3439 \qquad [3\text{-}15]$$

$$K_c = \sqrt{K} = 0.5865$$

$$p_{VD} = 23.67(0.12) + 22(0.125) - 28(0.0625) + 6(0.14) = 4.68 \text{ ksf}$$

$$p_{HD} = Kp_v - 2K_c c_d \ , \quad c_d = \frac{2}{3}\, c = 1.67 \text{ ksf}$$

$$p_{HD} = 0.3439(4.68) - 2(0.5865)(1.67) = -0.3495 \text{ ksf}$$

Negative horizontal earth pressure at D shows that there will be no earth pressure on Surface CD. Also, no at-rest earth pressure can act on Surface EF.

(2) Backfill:

$$\text{SMF} = \frac{2}{3} \ , \quad \phi_d = \tan^{-1}\left(\frac{2}{3}\tan\phi\right) = 25°$$

$$c_1 = 2\tan\phi_d = 2(0.466308) = 0.932616 \qquad [3\text{-}26]$$

$$c_2 = 1 - \tan\phi_d \tan\beta - \frac{\tan\beta}{\tan\phi_d} \qquad [3\text{-}27]$$

$$c_2 = 1 - 0.466308 \times \frac{1}{6} - \frac{\frac{1}{6}}{0.466308} = 0.564864$$

$$\alpha = \tan^{-1}\left(\frac{c_1 + \sqrt{c_1^2 + 4c_2}}{2}\right) = \underline{\underline{53.49°}} \qquad [3\text{-}25]$$

$$K_1 = \frac{1 - \tan\phi_d \cot\alpha}{1 + \tan\phi_d \tan\alpha} \cdot \frac{\tan\alpha}{\tan\alpha - \tan\beta} \qquad \text{(see Appendix H)}$$

$$K_1 = \frac{1 - 0.466308 \times 0.740231}{1 + 0.466308 \times 1.350929} \cdot \frac{1.350929}{1.350929 - \frac{1}{6}} = \underline{\underline{0.4583}} \text{ (use above water table)}$$

b. <u>Uplift and water pressures (paragraph 3-22, rock foundation assumed)</u>. Since the total seepage path length is the base width, full hydrostatic pressures will exist at points D and E (see paragraph 3-22).

$$u_D = 28 \text{ ft } (0.0625) = \underline{\underline{1.75 \text{ ksf}}}$$

$$u_E = 16 \text{ ft } (0.0625) = \underline{\underline{1.00 \text{ ksf}}}$$

For the same reason the buoyant weights for backfill and foundation materials are:

$$\gamma_b \text{ (Backfill)} = 0.125 - 0.0625 = 0.0625 \text{ kcf}$$

$$\gamma_b \text{ (Foundation)} = 0.140 - 0.0625 = 0.0775 \text{ kcf}$$

c. Buoyant earth pressure coefficient (Appendix H):

$$K = \frac{1 - \tan \phi_d \cot \alpha}{1 + \tan \phi_d \tan \alpha} = 0.40176$$

$$K_b = K\left[1 + \left(\frac{\tan \alpha}{\tan \alpha - \tan \beta} - 1\right)\left(\frac{\gamma_m}{\gamma_b}\right)\right]$$

$$K_b = 0.40176\left[1 + \left(\frac{1.350929}{1.350929 - \frac{1}{6}} - 1\right)\left(\frac{0.12}{0.0625}\right)\right] = \underline{\underline{0.5103}}$$

d. Overturning stability analysis (paragraph 4-8). For the first trial solution, all of the base is assumed to be in compression (full hydrostatic pressure is applied at points D and E). For the second trial, full hydrostatic pressure is assumed to act over the portion of the base which is not in compression. This procedure is continued until the assumed amount of the base in compression equals the calculated value. The final solution is shown on the following page.

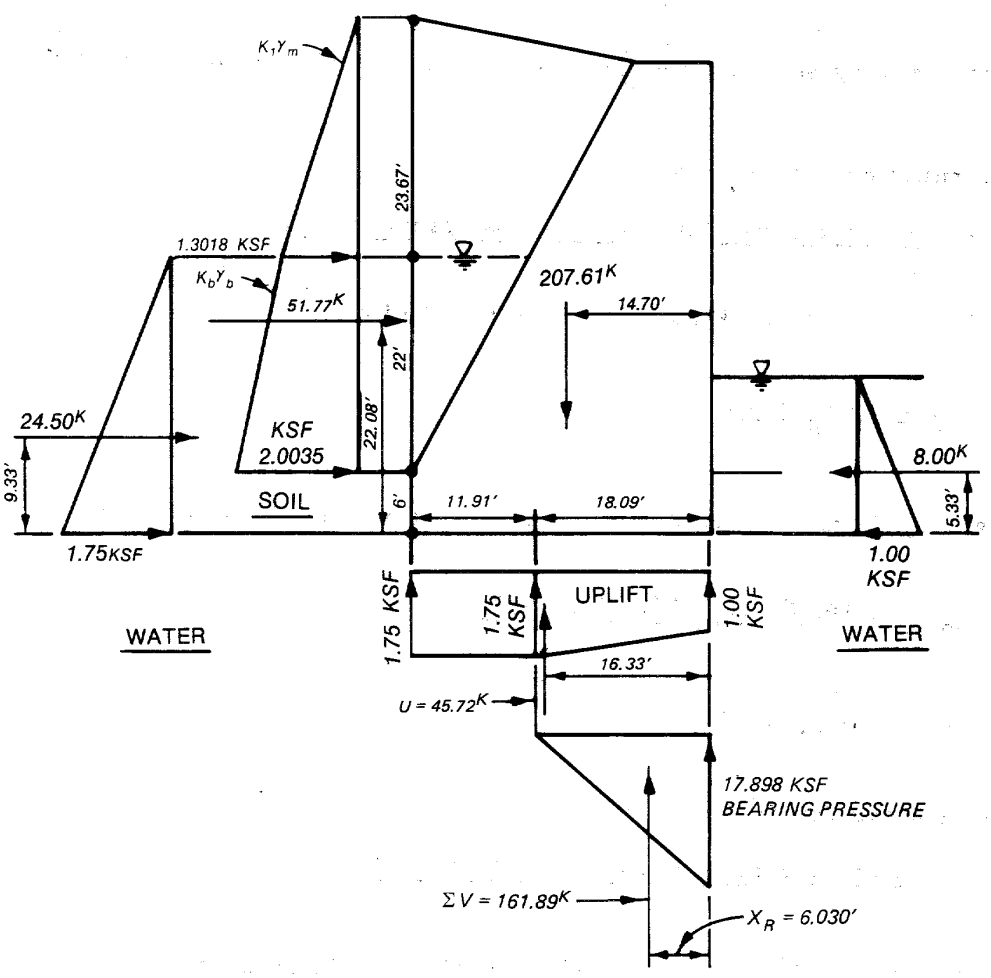

207.61 kips × 14.70 = 3051.87 ft-kips
-45.72 kips × 16.33 = -746.61 ft-kips

161.89 kips = ΣV

-51.77 kips × 22.08 = -1143.081 ft-kips
-24.50 kips × 9.33 = -228.59 ft-kips
8.00 kips × 5.33 = 42.64 ft-kips

-68.27 kips = ΣH 976.23 ÷ 161.89 = 6.030 ft = x_R

Width of base in compression = $3x_R$ = 18.09 ft.

Percent in compression = $\left(\frac{18.09}{30}\right)(100) = 60.3\% > 50\%$ required by Table 4.1.

Overturning criterion is satisfied.

e. Sliding stability analysis (paragraph 4-15).

$N' = \Sigma V = 161.89$ kips, $T = \Sigma H = 68.27$ kips

$$T \leq \frac{N' \tan \phi + cL}{FS} \qquad [4\text{-}12]$$

Using the minimum required FS of 1.33 as given in Table 4-1 yields

$$68.27 \leq \frac{161.89 \tan 40° + 2.5(18.09)}{1.33}$$

$$68.27 \leq 136.14$$

Sliding criterion is satisfied.

f. Bearing capacity analysis (Chapter 5).

$$\delta = \tan^{-1}\left(\frac{\Sigma H}{\Sigma V}\right) = \tan^{-1}\left(\frac{68.27}{161.89}\right) = 22.87° \text{ (Figure 5-1a)}$$

$$e = \frac{B}{2} - x_R = 15 - 6.030 = 8.970 \text{ ft}$$

$$\overline{B} = B - 2e = 30 - 2(8.970) = 12.060 \text{ ft (Figure 5-1a)}$$

$\gamma' = 0.0775$ kcf, $D = 6$ ft

$$q_o = \gamma' D = 0.0775(6 \text{ ft}) = 0.465 \text{ ksf} \qquad [5\text{-}8a]$$

$$\xi_{cd} = 1 + 0.2(D/\overline{B}) \tan\left(45° + \frac{\phi}{2}\right) \qquad [5\text{-}4a]$$

$$\xi_{cd} = 1 + 0.2(0.4975)(2.1445) = 1.213$$

$$\xi_{qd} = \xi_{\gamma d} = 1 + 0.1(D/\overline{B}) \tan\left(45 + \frac{\phi}{2}\right) = 1.107 \qquad [5\text{-}4c]$$

$$\xi_{qi} = \xi_{ci} = \left(1 - \frac{\delta}{90}\right)^2 = \left(1 - \frac{22.87}{90}\right)^2 = 0.5564 \qquad [5\text{-}5a]$$

$$\xi_{\gamma i} = \left(1 - \frac{\delta}{\phi}\right)^2 = \left(1 - \frac{22.87}{40}\right)^2 = 0.1834 \qquad [5\text{-}5b]$$

$N_c = 75.31$, $N_q = 64.20$, $N_\gamma = 93.69$ (Table 5-1)

From Equation 5-2

$$Q = \overline{B}\left(\xi_{cd}\xi_{ci}cN_c + \xi_{qd}\xi_{qi}q_oN_q + \frac{\xi_{\gamma d}\xi_{\gamma i}\overline{B}\gamma N_\gamma}{2}\right) \qquad [5\text{-}2]$$

$$Q = 12.060\left[1.213(0.5564)(2.5)(75.31) + 1.107(0.5564)(0.465)(64.2) + \frac{1.107(0.1834)(12.060)(0.0775)(93.69)}{2}\right]$$

$Q = 1861.41$ kips

For this problem $\Sigma V = N'$. The FS is calculated using Equation 5-1.

$$FS = \frac{Q}{N'} = \frac{1861.41}{161.89} = 11.50 > 2.0 \qquad \text{(Required by Table 4-1.)}$$

Bearing criterion is satisfied.

N-3. EXAMPLE 3. Analyze the wall for overturning stability, sliding and bearing capacity. Determine water pressure using the line of creep method. Calculate reinforcement required at critical sections. Case I1, design flood.

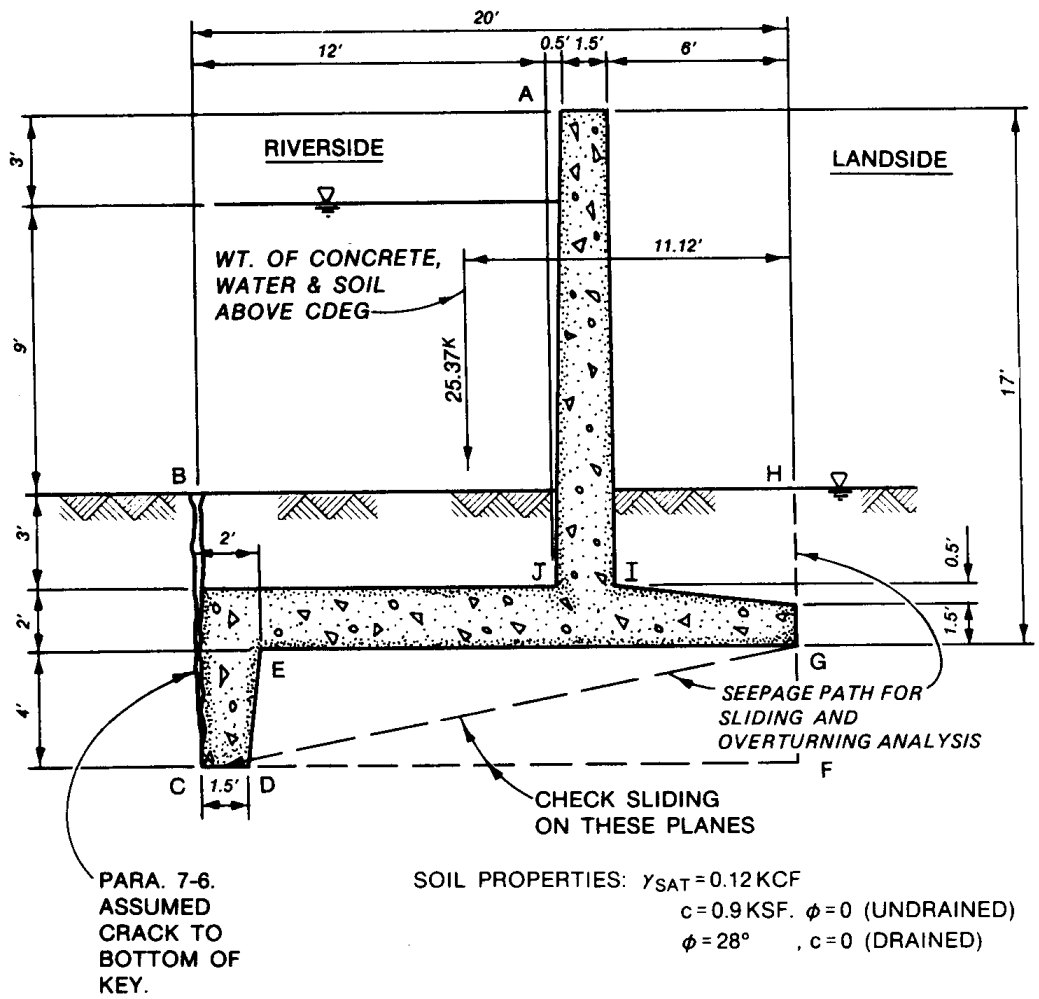

a. Water pressures (line of creep, paragraph 3-19).

$$L_{CG} = \sqrt{4^2 + 20^2} = 20.40 \text{ ft}, \quad L_{BC} = 0, \quad \Delta_h = 9 \text{ ft}$$

$$L_{GH} = 5 \text{ ft}, \quad L_S = 20.4 \text{ ft} + 5 \text{ ft} = 25.4 \text{ ft}$$

$$u_C = \begin{matrix}\text{Dist. below}\\ \text{Headwater}\end{matrix} - \frac{\Delta_h(L_{BC})}{L_S} \quad \gamma_w = \left(18 \text{ ft} - \frac{9 \times 0}{25.4}\right) 0.0625 = 1.125 \text{ ksf}$$

$$u_G = \begin{matrix}\text{Dist. below}\\ \text{Headwater}\end{matrix} - \frac{\Delta_h(L_{CG})}{L_S} \quad \gamma_w = \left(14 \text{ ft} - \frac{9 \times 20.4}{25.4}\right) 0.0625 = 0.4232 \text{ ksf}$$

Compute water pressure at D and E. Prorate head loss along path CDEG. Total head loss along path

$$CG = \frac{9(20.4)}{25.4} = 7.228 \text{ ft}$$

$$L_S \text{ (Concrete surface)} = L_{CD} + L_{DE} + L_{EG}$$

$$L_S = 1.5 + 4.03 + 18 = 23.53 \text{ ft}$$

$$\text{Head loss at } D = \frac{1.5}{23.53}(7.228) = 0.4608 \text{ ft}$$

$$u_D = (18 - 0.4608)0.0625 = 1.0962 \text{ ksf}$$

$$\text{Head loss at } E = \frac{(1.5 + 4.03)}{23.53}(7.228) = 1.699 \text{ ft}$$

$$u_E = (14 - 1.699)0.0625 = 0.7688 \text{ ksf}$$

b. Overturning stability (paragraph 4-8).

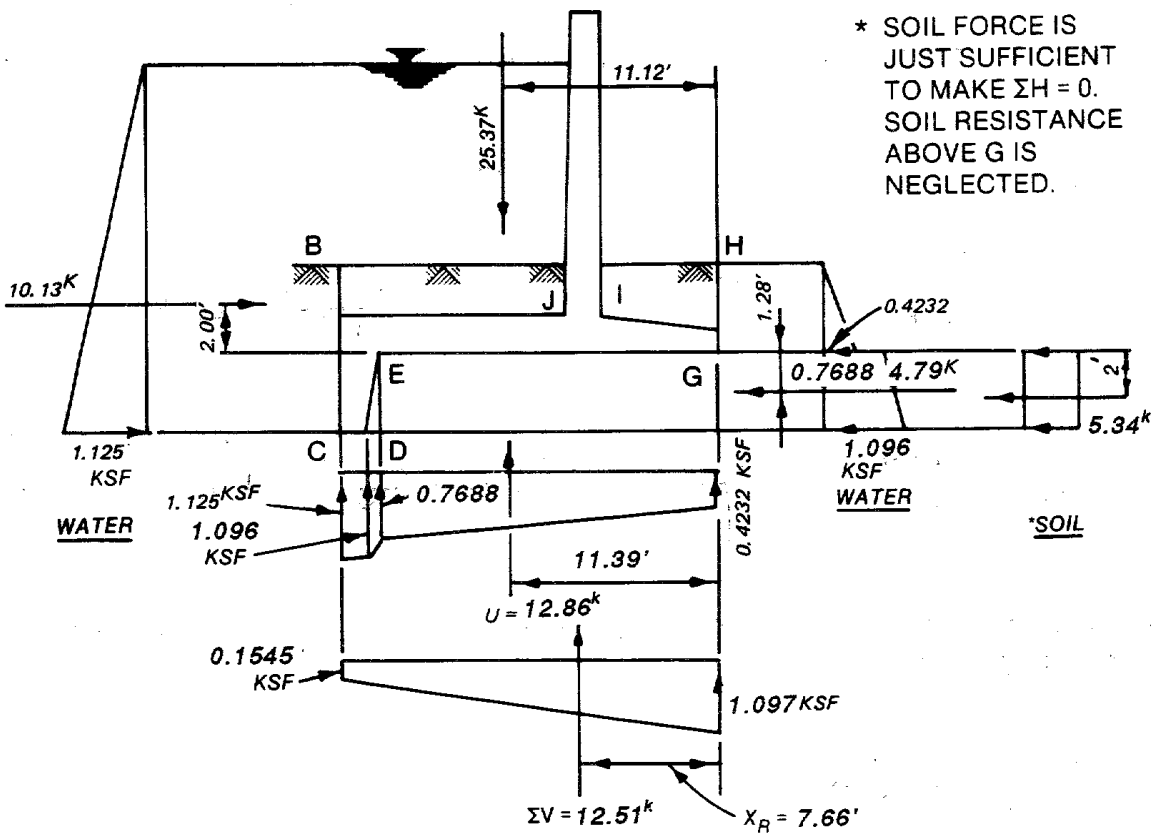

Overturning calculations

$$
\begin{array}{rrl}
 & 25.37 \text{ kips} \times 11.12 \text{ ft} = & 282.11 \text{ ft-k} \\
 & -12.86 \text{ kips} \times 11.39 \text{ ft} = & -146.48 \text{ ft-k} \\
\Sigma V = & 12.51 \text{ kips} &
\end{array}
$$

$$
\begin{array}{rrl}
 & -10.13 \text{ kips} \times 2.00 \text{ ft} = & -20.26 \text{ ft-k} \\
 & 4.79 \text{ kips} \times -1.28 \text{ ft} = & -6.13 \text{ ft-k} \\
 & 5.34 \text{ kips} \times -2.00 \text{ ft} = & -10.68 \text{ ft-k} \\
\Sigma H = & 0.00 \text{ kip} & 98.56 \div 12.51 = 7.87 \text{ ft} = x_R
\end{array}
$$

One hundred percent of base is in compression satisfying the requirements of Table 4-2.

c. Sliding stability analysis (paragraph 4-10).

(1) On Plane CG:

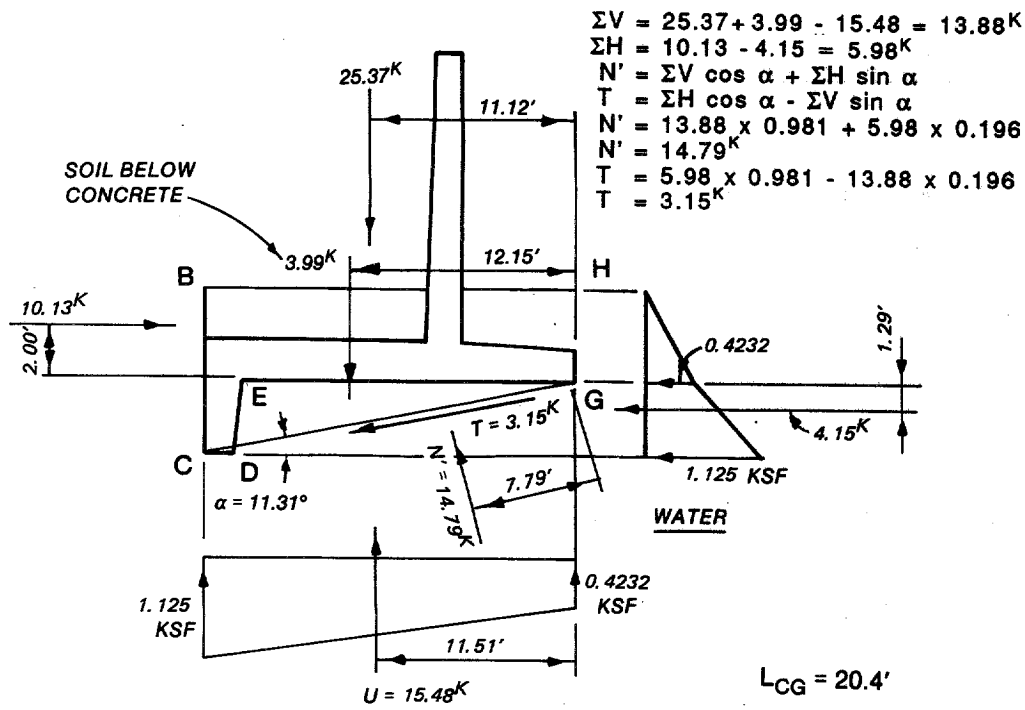

For undrained shear strength:

$$cL_{CG} = 0.9 \times 20.4 = 18.36 \text{ kips}$$

$$T \leq \frac{N' \tan \phi + cL}{FS} \qquad [4\text{-}12]$$

From Table 4-2, the minimum FS is 1.5.

$$3.15 \leq \frac{18.36}{1.5}$$

$$3.15 \leq 12.24$$

For drained shear strength,

$$N' \tan \phi = 14.79 \times 0.532 = 7.86 \text{ kips}$$

$$T \leqq \frac{N' \tan \phi + cL}{FS} \qquad [4\text{-}12]$$

Using the minimum FS of 1.5 from Table 4-2 yields

$$3.15 \leqq \frac{7.86}{1.5}$$

$$3.15 \leqq 5.24$$

Sliding resistance is adequate without considering soil resistance on landside.

(2) On Plane CF:

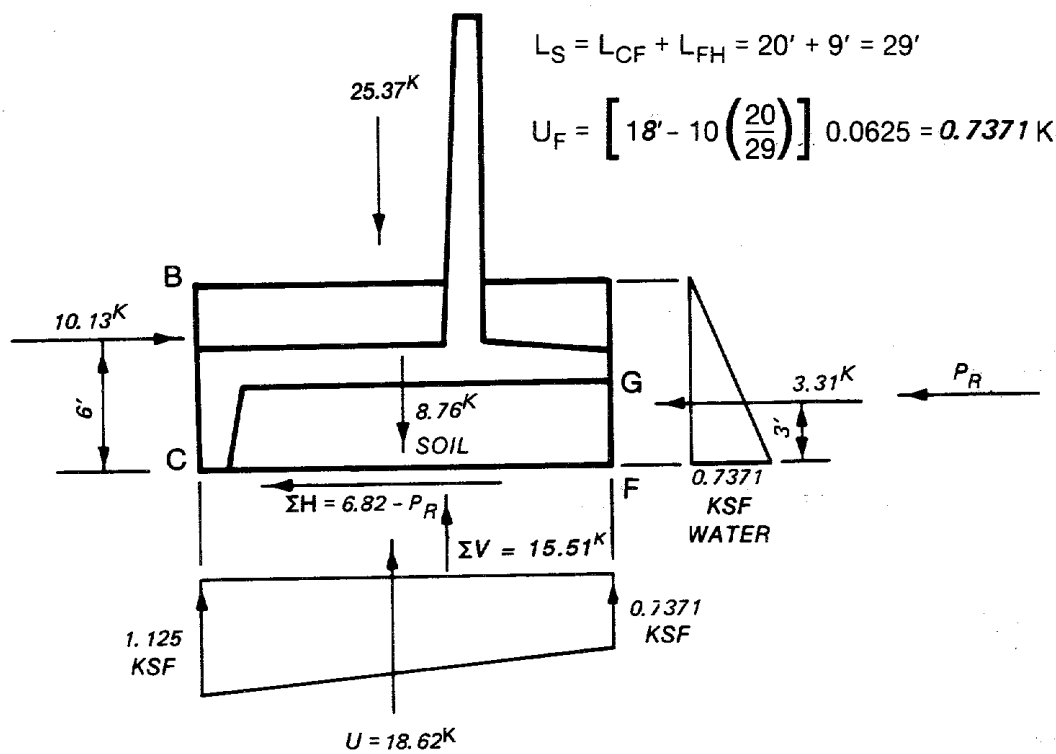

γ' = effective weight on landside = [9 ft(0.12) - 0.7371] ÷ 9
= 0.0381 kcf

Undrained condition,

$c = 0.9$ ksf

$$c_d = SMF(c) \qquad [3\text{-}10]$$

$$c_d = \frac{2}{3}(0.9) = 0.6 \text{ ksf}$$

$K_o = 1.0$ (from Equation 3-4)

The at-rest earth force may be calculated as:

$$P_R = \frac{1}{2}\gamma_b h^2 = \frac{1}{2}(0.0381)(9)^2 = 1.54 \text{ kips}$$

$$c_d L_{CF} = 0.6(20) = 12 \text{ kips}$$

$$T \leq \frac{N' \tan\phi + cL}{FS} \qquad [4\text{-}12]$$

Using the minimum FS of 1.5 from Table 4-2 yields

$$T = \Sigma H = 6.82 - 1.54 = 5.28 \text{ kips}$$

$$5.28 \leq \frac{12}{1.5}$$

$$5.28 \leq 8$$

Sliding resistance is adequate.

Drained condition,

$\phi = 28°$

$$SMF = \frac{\tan \phi_d}{\tan \phi} = \frac{2}{3} \qquad [3\text{-}10]$$

$$\phi_d = \tan^{-1}\left(\frac{2}{3} \tan \phi\right) = 19.52°$$

$$K_p = \tan^2\left(45° + \frac{\phi}{2}\right) = 2.77$$

Let $K = 1/2\ K_p = 1.385$ (Paragraph 3-8b)

$$P_R = \frac{1}{2} K\gamma_b h^2 = \frac{1}{2} (1.385)(0.0381)(9)^2 = 2.14 \text{ kips}$$

$$N' = \Sigma V = 25.37 + 8.76 - 18.62 = 15.51$$

$$T = 10.13 - 3.31 - 2.14 = 4.68 \text{ kips}$$

$$T \leq \frac{N' \tan \phi + cL}{FS} \qquad [4\text{-}12]$$

Using the minimum FS of 1.5 from Table 4-2 yields

$$4.68 \leq \frac{15.51 \tan 28°}{1.5}$$

$$4.68 \leq 5.50$$

Sliding resistance is adequate.

d. <u>Bearing capacity analysis (on Plane CG)</u>.

$N' = 14.79$ kips

$T = 3.15$ kips

$\alpha = 11.31° = 0.197$ rad

$$e = \frac{L_{CG}}{2} - a = \frac{20.4}{2} - 7.79 = 2.41$$

$$\overline{B} = L_{CG} - 2e = 15.58 \text{ ft}$$

$$\delta = \tan^{-1}\left(\frac{T}{N'}\right) = \tan^{-1}\left(\frac{3.15}{14.79}\right) = 12.02° \quad \text{(Figure 5-1)}$$

$\gamma' = 0.120 - 0.0625 = 0.0575$ kcf

$D = 5$ ft

$$q_o = \gamma' D = 0.0575(5) = 0.2875 \text{ ksf} \qquad [5\text{-}8a]$$

$$\xi_{cd}(\phi = 0) = 1 + 0.2\left(\frac{D}{\overline{B}}\right) = 1 + 0.2\left(\frac{5}{15.58}\right) = 1.064 \qquad [5\text{-}4a]$$

$$\xi_{qd} = \xi_{\gamma d} = 1 \quad (\text{for} \quad \phi = 0°) \qquad [5\text{-}4b]$$

$$\xi_{qd} = \xi_{\gamma d} = 1 + 0.1\left(\frac{D}{\overline{B}}\right)\tan\left(45° + \frac{\phi}{2}\right) \quad (\text{for} \quad \phi = 28°) \qquad [5\text{-}4c]$$

$$\xi_{qd} = \xi_{\gamma d} = 1 + 0.1\left(\frac{5}{15.58}\right)(1.6643) = 1.053 \quad (\phi = 28°)$$

$$\xi_{qi} = \xi_{ci} = \left(1 - \frac{\delta}{90}\right)^2 = \left(1 - \frac{12.02}{90}\right)^2 = 0.7507 \qquad [5\text{-}5a]$$

$$\xi_{\gamma i} = \left(1 - \frac{12.02}{28}\right)^2 = 0.3257 \qquad [5\text{-}5b]$$

$$\xi_{qt} = \xi_{\gamma t} = (1 - \alpha \tan \phi)^2 = (1 - 0.197 \times 0.532)^2 = 0.8015 \qquad [5\text{-}6a]$$

$$\xi_{ct} = 1 - \left(\frac{2\alpha}{\pi + 2}\right) = 1 - \left(\frac{0.394}{\pi + 2}\right) = 0.9232 \quad (\text{for} \quad \phi = 0) \qquad [5\text{-}6b]$$

Undrained condition:

$c = 0.9$ ksf

From Equation 5-2

$$Q = \overline{B}\left(\xi_{cd}\xi_{ci}\xi_{ct}cN_c + \xi_{qd}\xi_{qi}\xi_{qt}q_oN_q\right)$$

$N_c = 5.14$, $N_q = 1.00$ (Table 5-1)

$$Q = 15.58\left[1.064(0.7507)(0.9232)(5.14)(0.9) + 1(0.7507)(0.8015)(0.2875)(1)\right]$$

$Q' = 55.84$ kips, $FS = \frac{Q}{N'} = \frac{55.84}{14.79} = 3.78 > 3.00$ (Table 4-2)

Drained condition:

$\phi = 28°$

$$Q = \overline{B}\left(\xi_{qd}\xi_{qi}\xi_{qt}q_oN_q + \frac{\xi_{\gamma d}\xi_{\gamma i}\xi_{\gamma t}\overline{B}_\gamma N_\gamma}{2}\right)$$

$N_q = 14.72$, $N_\gamma = 11.19$ (Table 5-1)

$$Q = 15.58\left[1.053(0.7507)(0.8015)(0.2875)(14.72) + \frac{1.053(0.3257)(0.8015)(15.58)(0.0575)(11.19)}{2}\right] = 63.24 \text{ kips}$$

$$FS = \frac{Q}{N'} = \frac{63.24}{14.79} = 4.28 > 3.00 \quad \text{(Table 4-1)}$$

Bearing capacity is adequate.

e. Reinforcement (Chapter 9).

$f'_c = 3$ ksi, $f_y = 40$ ksi, cover = 4.5 in.

(1) At base of stem:

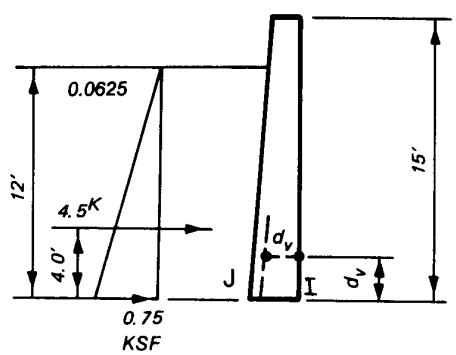

$M = 4.5 \times 4 = 18.00$ k-ft

$$\frac{M_u}{\phi} = \frac{1.9(18.00)12}{0.9} = 456.0 \text{ k-in.}$$

$d = 24$ in. $- 4.5$ in. $= 19.5$ in.,

$b = 12$ in.

$$k_u = 1 - \sqrt{1 - \frac{M_u/\phi}{0.425 f'_c b d^2}} \quad \text{(Figure 9-2)}$$

$$k_u = 1 - \sqrt{1 - \frac{456.0}{5817.825}} = 0.0400$$

$$C_u = T_u = 0.85 f'_c k_u b d = 0.85(3)(0.040)(12)(19.5) = 23.87 \text{ kips}$$

$$A_s = \frac{T_u}{f_y} = \frac{23.87}{40} = \underline{\underline{0.60 \text{ in.}^2/\text{ft}}}$$

Check ductility requirements:

$\beta_1 = 0.85$, $\varepsilon_c = 0.003$

$$\rho_b = \frac{0.85 f'_c}{f_y} \beta_1 \left(\frac{\varepsilon_c}{\varepsilon_m + \frac{f_y}{29{,}000 \text{ ksi}}} \right) \text{(see example 1, paragraph i)}$$

$$\rho_b = \frac{0.85(3)}{40}\ (0.85)\left(\frac{0.003}{0.003 + \frac{40}{29,000}}\right) = 0.03712$$

$$\rho_{max} = \lambda\rho_b\ ,\quad \lambda = 0.25 \text{ (paragraph 9-8c(2)(a))}$$

$$\rho_{max} = 0.25(0.03712 = 0.000928$$

$$\rho_{min} = 200/f_y = 200/40,000 \text{ ksi} = 0.005 \text{ (paragraph 9-8b(4), from ACI 318)}$$

$$\rho = \frac{A_s}{bd} = \frac{0.60}{12(19.5)} = 0.002564$$

$$\rho < \rho_{min}$$

Instead of using ρ_{min} , ACI 318 allows the minimum area of reinforcement to be one-third greater than that required by analysis. Therefore,

$$A_s = 4/3(0.60) = 0.80\text{in.}^2/\text{ft}$$

$$\rho = \frac{A_s}{bd} = \frac{0.80}{12(19.5)} = 0.00342$$

$$\rho = \rho_{max}$$

Ductility is adequate.

(2) Check shear at distance d_v above base (paragraph 9-8f)

$$d_v = d - \left(\frac{0.5}{15}\right)d_v = 19.5 - 0.0333\ d_v$$

$$d_v = \frac{19.5}{1.03333} = 18.87 \text{ in.} = 1.573 \text{ ft}$$

$$V = \frac{1}{2}(0.0625)(12 - 1.573)^2 = 3.40 \text{ kips}$$

$$V_u = 1.9\ V = 1.9(3.40) = 6.46 \text{ kips} = 6{,}460 \text{ lb}$$

$$\phi V_c = \phi 2\sqrt{f'_c}\ bd_v \quad \text{(from ACI-318)}$$

$$\phi V_c = 2(0.85)(\sqrt{3000})(12)(18.87) = 21{,}084 \text{ lb} > 6{,}460$$

Shear capacity is adequate. Shear is most critical for stem.

(3) Toe at face of stem (Figure 9-2):

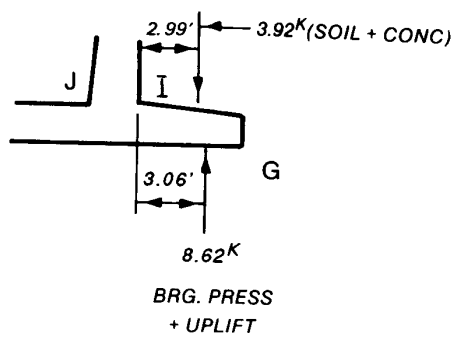

$$V_I = \begin{array}{r} 8.62 \times 3.06 = 26.38 \\ -3.92 \times 2.99 = -11.72 \\ \hline 4.70 \text{ kips} \end{array} \quad M = 14.66 \text{ k-ft}$$

$b = 12$ in., $d = 19.5$ in.

$$0.425 f'_c bd^2 = 5817.825$$

$$\frac{M_u}{\phi} = \frac{1.9(14.66)(12)}{0.9} = 371.39 \text{ k-in.}$$

$$k_u = 1 - \sqrt{1 - \frac{371.39}{5817.825}} = 0.03244$$

$$C_u = T_u = 0.85(3)(0.03244)(12)(19.5) = 19.36 \text{ kips}$$

$$A_s = \frac{T_u}{f_y} = \frac{19.36}{40} = \underline{\underline{0.48 \text{ in.}^2/\text{ft}}}$$

Check ductility:

$$\rho_{max} = 0.00928\ , \quad \rho_{min} = 0.005$$

$$\rho = \frac{A_s}{bd} = \frac{0.48}{12(19.5)} = 0.00205$$

Again, since $\rho < \rho_{min}$, use a one-third increase in the area of reinforcement required by analysis. Therefore,

$$A_s = 4/3(0.48) = 0.64 \text{ in.}^2/\text{ft}$$

$$\rho = \frac{A_s}{bd} = \frac{0.64}{12(19.5)} = 0.002735$$

$$\rho < \rho_{max}$$

Ductility is adequate.

(4) Heel and key reinforcement:

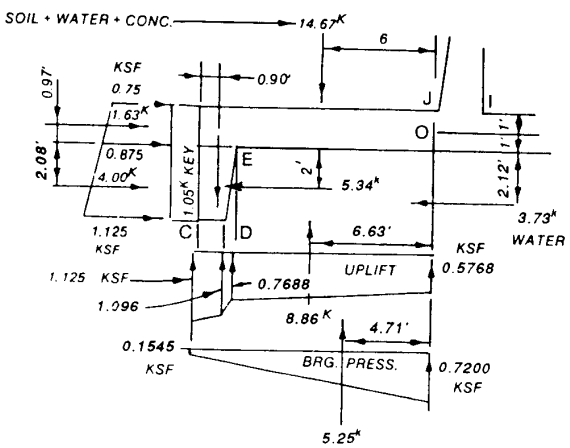

$$\begin{aligned} 14.67 \times 6.00 &= 88.02 \\ 1.05 \times 11.10 &= 11.66 \\ -8.86 \times 6.63 &= -58.74 \\ -5.25 \times 4.71 &= -24.73 \\ V = 1.61 \text{ kips} & \end{aligned}$$

$$\begin{aligned} -3.73 \times 3.12 &= -11.64 \\ -5.34 \times 3.00 &= -16.02 \\ 1.63 \times 0.02 &= 0.03 \\ 4.00 \times 3.08 &= 12.32 \\ P = -3.44 \text{ kips} & \end{aligned}$$

$$M_o = -0.90 \text{ k-ft}$$

b = 12 in., h = 24 in., d = 19.5 in.

$$0.425f'_c bd^2 = 5817.825$$

Reinforcement at "0" with 5.34 kips force on key (Figure 9-4):

$$M_u = 1.9M_o = 1.9(0.90)(12) = 20.52 \text{ in.-k}$$

$$P_u = 1.9P = 1.9(3.44) = 6.54 \text{ kips (tension)}$$

$$\frac{M_u}{P_u} = \frac{20.52}{6.54} = 3.14$$

$$d - \frac{h}{2} = 19.5 - \frac{24}{2} = 7.5$$

$\frac{M_u}{P_u} < d - \frac{h}{2}$ Therefore, the conditions of Figure 9-5 apply.

$$M_{ue} = -M_u + P_u \left(d - \frac{h}{2}\right)$$

$$= -20.52 + 6.54(7.5)$$

$$= 28.53 \text{ in.-k}$$

$$A'_s = \frac{M_{ue}}{\phi f_y (d - d')} = \frac{28.53}{0.9(40)(19.5 - 4.5)} = 0.053 \text{ in.}^2/\text{ft}$$

$$A_s = \frac{\frac{P_u}{\phi} - f_y A'_s}{f_y} = \frac{\frac{6.54}{0.9} - 40(0.053)}{40} = 0.13 \text{ in.}^2/\text{ft}$$

Reinforcement at "0" neglecting 5.34 kips force on key (Figure 9-3)

$$M_o = 0.90 + 5.34(3.00) = 16.92 \text{ ft-k} = 203.04 \text{ in.-k}$$

$$M_u = 1.9M_o = 385.78 \text{ in.-k}$$

$$P = 1.9 \text{ kips (compression)}$$

$$P_u = 1.9P = 1.9(1.9) = 3.61 \text{ kips}$$

$$\phi = 0.9 - \frac{P_u}{0.1f'_c bh}(0.2)$$

$$= 0.9 - \frac{3.61}{0.1(3)(12)(19.5)}(0.2)$$

$$= 0.89$$

$$M_{ue} = M_u + P_u\left(d - \frac{h}{2}\right)$$

$$= 385.78 + 3.61\left(19.5 - \frac{24}{2}\right)$$

$$= 412.86 \text{ in.-k}$$

$$k_u = 1 - \sqrt{1 - \frac{M_{ue}}{\phi 0.425 f'_c bd^2}}$$

$$= 1 - \sqrt{1 - \frac{412.86}{0.89(5817.825)}}$$

$$= 0.04070$$

$$A_s = \frac{0.85 f' k_u bd - \frac{P_u}{\phi}}{fy}$$

$$= \frac{0.85(3)(0.04070)(12)(19.5) - \frac{3.61}{0.89}}{40}$$

$$= 0.51 \text{ in.}^2\text{ft}$$

Check ductility:

$$\rho_{max} = 0.00928 \ , \quad \rho_{min} = 0.005$$

$$\rho = \frac{A_s}{bd} = \frac{0.51}{12(19.5)} = 0.00218$$

$$\rho < \rho_{min}$$

Use $A_s = 4/3(0.51) = 0.68 \text{ in.}^2/\text{ft}$

$$\rho = \frac{A_s}{bd} = \frac{0.68}{12(19.5)} = 0.00291$$

$$\rho < \rho_{max}$$

Ductility is adequate.

Reinforcement in key at "E" (Figure 9-2):

$$M = 5.34(2) + 3.73(2.12) - 4.00(2.08) = 10.27 \text{ ft-k}$$

$$\frac{M_u}{\phi} = \frac{1.9(10.27)(12)}{0.9} = 260.11 \text{ k-in.}$$

$$k_u = 1 - \sqrt{1 - \frac{260.11}{5817.825}} = 0.02261$$

$$C_u = T_u = 0.85(3)(0.02261)(12)(19.5) = 13.49 \text{ kips}$$

$$A_s = \frac{T_u}{f_y} = \frac{13.49}{40} = \underline{\underline{0.34 \text{ in.}^2/\text{ft}}}$$

Check ductility:

$$\rho_{max} = 0.00928 \ , \quad \rho_{min} = 0.005$$

$$\rho = \frac{A_s}{bd} = \frac{0.34}{12(19.5)} = 0.00145$$

$$\rho < \rho_{min}$$

Use $A_s = 4/3(0.34) = 0.45 \text{ in.}^2/\text{ft}$

$$\rho = \frac{A_s}{bd} = \frac{0.45}{12(19.5)} = 0.00194$$

$$\rho < \rho_{max}$$

Ductility is adequate.

N-4. EXAMPLE 4. Analyze the wall for overturning, sliding and bearing capacity. Use the line of creep method to determine water pressures. Load Case I1, Design Flood. Calculate reinforcement at critical sections.

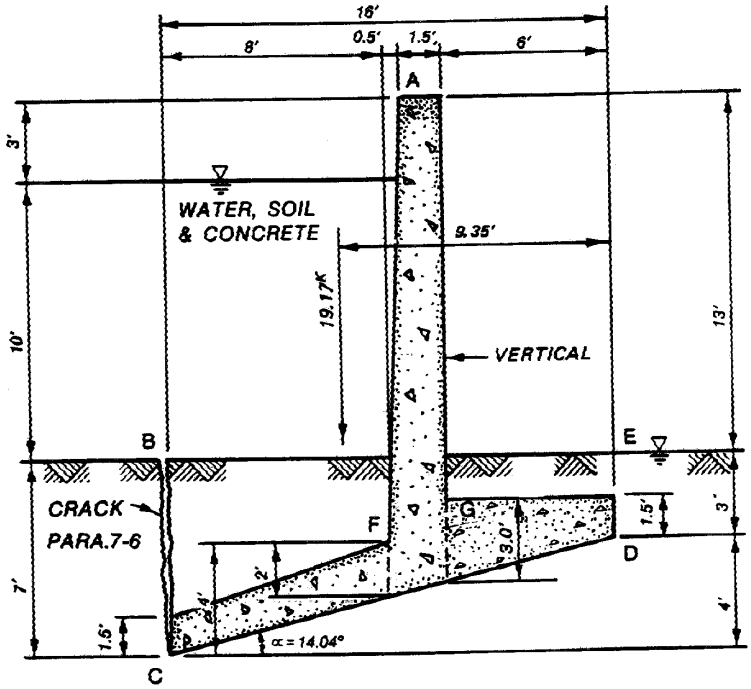

γ_{SAT} = 0.12 KCF
ϕ = 0
c = 0.9 KSF

a. Water pressures (paragraph 3-19).

u_C = 17(0.0625) = 1.0625 ksf

Δ_h = 10 ft

L_{CD} = 16.49 ft

L_{DE} = 3 ft

$$L_S = L_{CD} + L_{DE} = 19.49 \text{ ft}$$

$$U_D = \left(13 - \frac{10 \times 16.49}{19.49}\right)0.0625 = 0.2837 \text{ ksf}$$

b. Overturning stability.

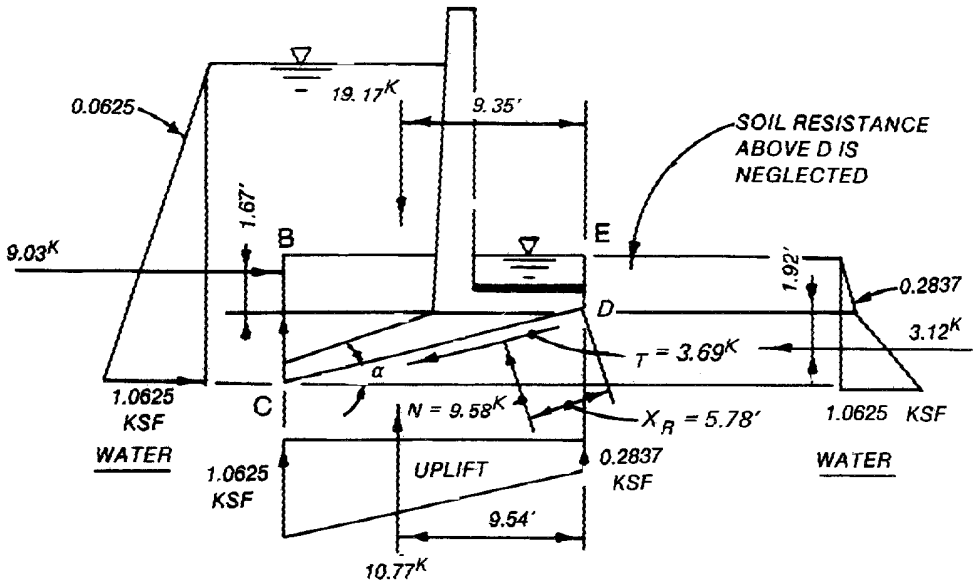

19.17 × 9.35 = 179.24		$N' = \Sigma V \cos\alpha + \Sigma H \sin\alpha$
-10.77 × 9.54 = -102.75		$T = \Sigma H \cos\alpha - \Sigma V \sin\alpha$
8.40 kips = ΣV		$N' = 8.40(0.970) + 5.91(0.243)$
		$N' = 9.58$ kips
-9.03 × 1.67 = -15.08		$T = 5.91(0.97) - 8.40(0.243)$
3.12 × -1.92 = -5.99		$T = 3.69$ kips
-5.91 kips	55.42 k-ft = M_D	

$$x_R = \frac{M_D}{N'} = \frac{55.42}{9.58} = 5.78 \text{ ft} > \frac{L_{CD}}{3} = \frac{16.49}{3} = 5.50 \text{ ft}$$

One hundred percent of Surface CD is in compression (Table 4-2). Overturning criterion is satisfied.

c. Sliding stability (paragraph 4-15).

On Surface CD:

$N' = 9.58$ kips, $T = 3.69$ kips, $\alpha = 14.04°$, $\phi = 0$, $c = 0.9$ ksf

$L_{CD} = 16.49$ ft

$$T \leq \frac{N' \tan \phi + cL}{FS} \qquad [4\text{-}12]$$

Using the minimum required FS of 1.5, as given in Table 4-2, yields

$$3.69 \leq \frac{9.58 \tan 0° + 0.9(16.49)}{1.5}$$

$$3.69 \leq 9.89$$

Sliding criterion is satisfied.

d. Bearing capacity analysis.

$\alpha = 14.04°$

$\alpha = 0.245$ rad

$$\delta = \tan^{-1}\left(\frac{T}{N'}\right) = \tan^{-1} \frac{3.69}{9.58} = 21.07°$$

$$e = \frac{L_{CD}}{2} - x_R = \frac{16.49}{2} - 5.78 = 2.465 \text{ ft}$$

$\overline{B} = L_{CD} - 2e = 16.49 - 2(2.465) = 11.56$ ft (Figure 5-1b)

$\gamma' = \gamma_{sat} - \gamma_w = 0.120 - 0.0625 = 0.0575$ kcf

$$q_o = \gamma'_D = 0.0575(3) = 0.1725 \text{ ksf} \qquad [5\text{-}8a]$$

$$\xi_{cd} = 1 + 0.2\left(\frac{D}{\overline{B}}\right) = 1 + 0.2\left(\frac{3}{11.56}\right) = 1.05 \qquad [5\text{-}4a]$$

$$\xi_{\gamma d} = \xi_{qd} = 1.00 \qquad [5\text{-}4b]$$

$$\xi_{ci} = \xi_{qi} = \left(1 - \frac{\delta}{90}\right)^2 = \left(1 - \frac{21.07}{90}\right)^2 = 0.587 \qquad [5\text{-}5a]$$

$$\xi_{\gamma i} = 0 \qquad [5\text{-}5b]$$

$$\xi_{qt} = \xi_{\gamma t} = 1 \qquad [5\text{-}6a]$$

$$\xi_{ct} = 1 - \left(\frac{2\alpha}{\pi + 2}\right) = 1 - \left(\frac{2 \times 0.245}{5.14}\right) = 0.905 \qquad [5\text{-}6b]$$

$N_c = 5.14$, $N_q = 1$, $N_\gamma = 0$ (Table 5-1)

$$\xi_{\gamma g} = \xi_{qg} = \left[1 - \tan(\beta)\right]^2 = \left[1 - \tan(0)\right]^2 = 1 \qquad [5\text{-}7a]$$

$$\xi_{cg} = 1 - \frac{2(\beta)}{(\pi + 2)} = 1 - \frac{2(0)}{(\pi + 2)} = 1 \qquad [5\text{-}7b]$$

$$Q = \overline{B}\left[(\xi_{cd}\xi_{ci}\xi_{ct}\xi_{cg}cN_c) + (\xi_{qd}\xi_{qi}\xi_{qt}\xi_{qg}q_oN_q) + \frac{(\xi_{\gamma d}\xi_{\gamma i}\xi_{\gamma t}\xi_{\gamma g}\overline{B}\gamma N_\gamma)}{2}\right] \qquad [5\text{-}2]$$

$$= 11.56\left[(1.05)(0.587)(0.905)(1)(0.9)(5.14) + (1)(0.587)(1)(1)(0.1725)(1) + \frac{(1)(0)(1)(1)(11.56)(0.0575)(0)}{2}\right] = 31.00 \text{ kips}$$

$$FS = \frac{Q}{N'} = \frac{31.00}{9.58} = 3.24 \qquad [5\text{-}1]$$

3.24 > 3.0 , so bearing criterion is satisfied (Table 4-2)

e. Reinforcement (Chapter 9).

f'_c = 3 ksi, f_y = 40 ksi, load factor = 1.9 , ϕ = 0.9 ,
cover = 4.5 in.

(1) At base of stem (Figure 9-2): b = 12 in., h = 23.44 in., d = 23.44 - 4.5 = 18.94 in.

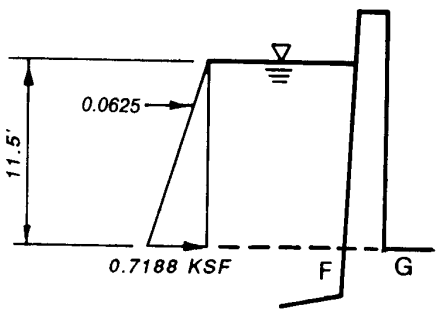

$$M = 0.0625(11.5)\left(\frac{11.5}{2}\right)\left(\frac{11.5}{3}\right)$$

$$M = 0.0625(11.5)^3\,\frac{1}{6} = 15.84 \text{ ft-k}$$

$$\frac{M_u}{\phi} = \frac{1.9(15.84)(12)}{0.9} = 401.28 \text{ k-in.}$$

$$0.425 f'_c b d^2 = 5488.471$$

$$k_u = 1 - \sqrt{1 - \frac{401.28}{5488.471}} = 0.03725$$

$$C_u = T_u = 0.85 f'_c k_u b d$$

$$C_u = T_u = 21.59 \text{ kips}$$

$$A_s = \frac{T_u}{f_y} = \frac{21.59}{40} = \underline{\underline{0.54 \text{ in.}^2/\text{ft}}}$$

For shear check see Example 1 and 3, Appendix N.

Check ductility and concrete section strength: calculate ρ_b for ε_c = 0.003 , f_y = 40 ksi, f'_c = 3 ksi, β_1 = 0.85 .

$$\rho_b = \frac{0.85f'_c\beta_1}{f_y}\left(\frac{\varepsilon_c}{\varepsilon_1 + \frac{f_y}{29{,}000\ \text{ksi}}}\right)$$ (See Example 1 for derivation of ρ_b)

$$= \frac{0.85(3)(0.85)}{40}\left(\frac{0.003}{0.003 + \frac{40}{29{,}000}}\right)$$

$$= 0.03712$$

$$\rho_{max} = 0.25\ \rho_b = 0.00928$$

$\rho_{min} = 200/f_y = 200/40{,}000 = 0.005$ (paragraph 9-8b(4), from ACI 318)

$$\rho_{actual} = \frac{A_s}{bd} = \frac{0.54}{12(18.94)} = 0.00238$$

Since $\rho < \rho_{min}$, use a one-third increase in the required area of reinforcement (from ACI 318).

$$A_s = 4/3(0.54) = 0.72\ \text{in.}^2/\text{ft}$$

$$\rho = \frac{A_s}{bd} = \frac{0.72}{12(18.94)} = 0.00317$$

$$\rho < \rho_{max}$$

Ductility is adequate.

(2) In toe at stem (Chapter 9, Figure 9-3): b = 12 in., d = 36 - 4.5 = 31.5 in.

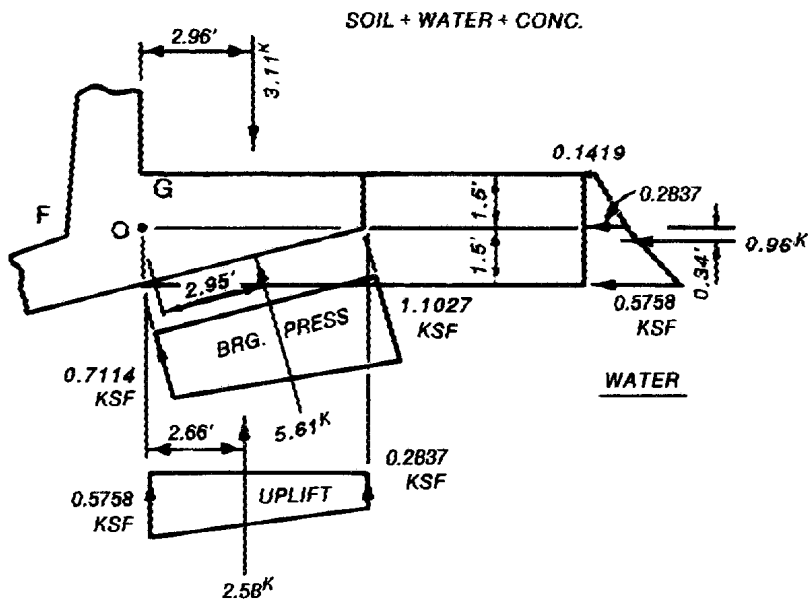

$$
\begin{aligned}
2.58(2.66) &= 6.863 \\
5.61(2.95) &= 16.550 \\
-3.11(2.96) &= -9.206 \\
0.96(-0.34) &= \underline{-0.326} \\
M_o &= 13.881 \text{ k-ft}
\end{aligned}
$$

$P_o = 0.96 + 5.61 \sin 14.04° = 2.32$ kips

$M_u = 1.9(13.881) = 26.37$ ft-k $= 316.44$ in.-k

$P_u = 1.9(2.32) = 4.41$ kips

$$M_{ue} = M_u + P_u\left(d - \frac{h}{2}\right) = 316.44 + 4.41\left(31.5 - \frac{36}{2}\right) = 375.98 \text{ in.-k}$$

$$\frac{M_{ue}}{\phi} = \frac{375.98}{0.9} = 417.75 \text{ in.-k}$$

$$0.425f'_c bd^2 = 0.425(3)(12)(31.5)^2 = 15{,}181.425$$

$$k_u = 1 - \sqrt{1 - \frac{M_{ue}}{\phi} \frac{1}{0.425 f'_c b d^2}} = 1 - \sqrt{1 - \frac{417.75}{15,181.425}}$$

$$= 0.01385$$

$$C_u = 0.85 f'_c k_u b d = 0.85(3)(0.01385)(12)(31.5)$$

$$C_u = 13.35 \text{ kips} = T_u$$

$$A_s = \frac{T_u}{f_y} = \frac{13.35}{40} = 0.33 \text{ in.}^2/\text{ft}$$

$$\rho = \frac{0.33}{12(31.5)} = 0.000873 < \rho_{max} = 0.00928$$

Since $\rho < \rho_{min}$, use a one-third increase in the area of reinforcement (from ACI 318).

$$A_s = 4/3(0.33) = 0.44 \text{ in.}^2/\text{ft}$$

(3) In heel at stem (Figure 9-3):

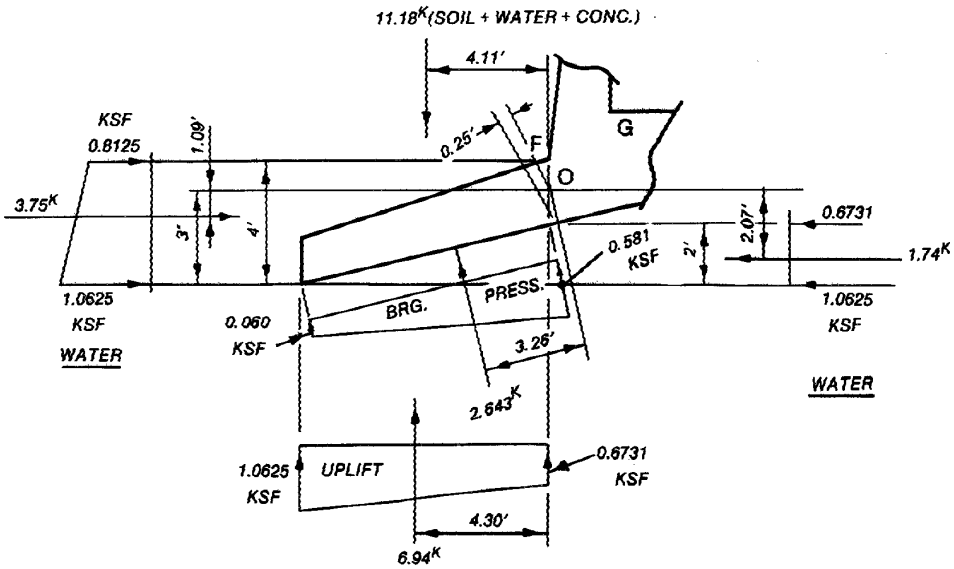

-1.74	× 2.07	=	-3.60	
11.18	× 4.11	=	45.95	
3.75	× 1.09	=	4.09	
-2.643	× 3.26	=	-8.62	
-6.94	× 4.30	=	-29.84	
		M_o =	7.98 k-ft	

b = 12 in., d = 19.5 in.

$0.425f'_c bd^2 = 5817.825$

$M_u = 1.9(7.98) = 15.16$ ft-k = 181.92 in.-k

$P = 3.75 - 1.74 - 2.643 \sin 14.04° = 1.37$ kips (compression)

$P_u = 1.9(1.37) = 2.60$ kips

$$M_{ue} = M_u + P_u\left(d - \frac{h}{2}\right) = 181.92 + 2.60\left(19.5 - \frac{24}{2}\right) = 201.42 \text{ in.-k}$$

$$\phi = 0.9 - \frac{P_u}{0.1f'_c bh}(0.2)$$

$$= 0.9 - \frac{2.6}{0.1(3)(12)(24)}(0.2)$$

$$= 0.89$$

$$\frac{M_{ue}}{\phi} = \frac{201.42}{0.89} = 226.31 \text{ in.-k}$$

Check d_{min} from Equation 9-13:

$$\rho_{max} = 0.25\rho_b = 0.00928$$

$$k_m = \frac{f_y \rho_{max}}{0.85f'_c} = \frac{40{,}000(0.00928)}{0.85(3000)} = 0.14557$$

$$d_{min} = \sqrt{\frac{\frac{M_u}{\phi}}{0.85f'_c k_m b\left(1 - \frac{k'_m}{2}\right)}}$$

$$= \sqrt{\frac{226.31}{0.85(3)(0.14557)(12)\left(1 - \frac{0.14557}{2}\right)}}$$

$$= 7.40 \text{ in.}$$

This is an approximate value of d_{min} because Equation 9-13 is valid only for flexure.

$$h_{min} = 7.40 + 4.5 = 11.9 \text{ in.}$$

The heel could have a constant thickness of 12 inches if desired. The steel will be sized for a d = 19.5 inches.

$$k_u = 1 - \sqrt{1 - \frac{M_{ue}}{\phi 0.425 f'_c bd^2}}$$

$$= 1 - \sqrt{1 - \frac{226.31}{5817.825}}$$

$$= 0.01964$$

$$A_s = \frac{0.85 f'_c k_u bd - \frac{P_u}{\phi}}{f_y}$$

$$= \frac{0.85(3)(0.01964)(12)(19.5) - \frac{2.60}{0.89}}{40}$$

$$= 0.22 \text{ in.}^2/\text{ft}$$

$$\rho = \frac{A_s}{bd} = \frac{0.22}{12(19.5)} = 0.0009402 < \rho_{min} = 0.005$$

Since $\rho < \rho_{min}$, use a one-third increase in the area of reinforcement.

$$A_s = 4/3(0.22) = = 0.29 \text{ in.}^2/\text{ft}$$

N-5. EXAMPLE 5. Analyze the wall for overturning, sliding and bearing capacity. Determine water pressure using the line of creep method. Load Case I2.

Assume that sheet pile cutoff wall is 50 percent effective.

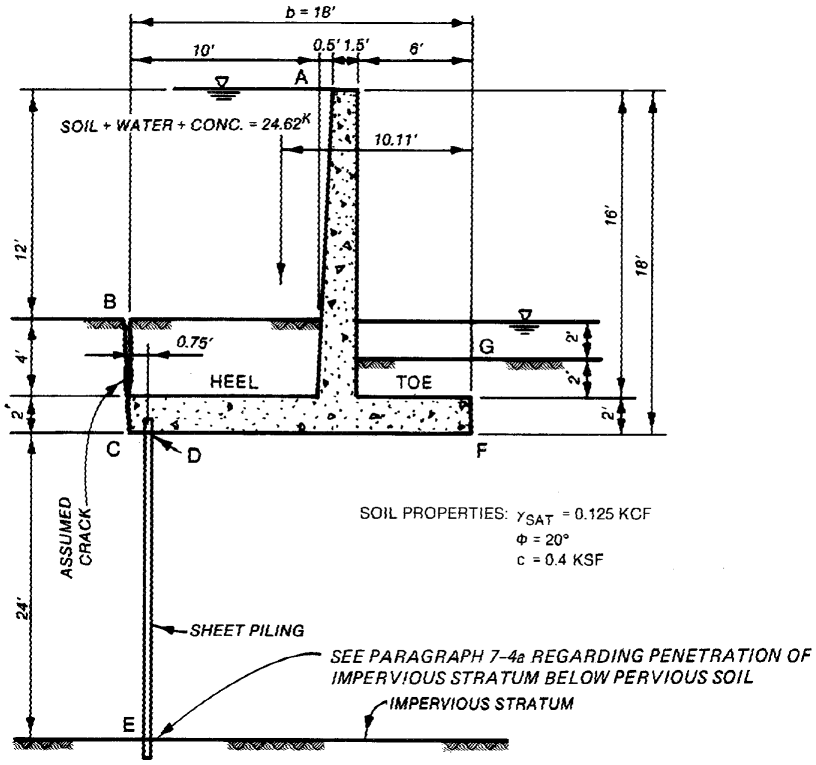

a. Water pressure with steel sheet pile cutoff wall. Reference: Paragraph 7-4a.

Full-head pressure on headwater side of sheet pile at point C

= (18 ft)(0.0625 pcf) = 1.125 ksf

Pressure at point F, based on seepage path from cutoff wall (point D) to point G:

$$= \left(\begin{matrix}\text{pressure} \\ \text{head at F} \\ \text{due to position}\end{matrix} + \text{total head differential} \times \frac{FG}{DFG}\right)(0.0625)$$

$$= \left(6.0 + 12.0\,\frac{4}{21.25}\right)(0.0625) = 0.516 \text{ ksf at point F}$$

Pressure on tailwater side of sheet pile at point D

= full-head pressure at D - 50% (full-head pressure at D - pressure at point F)

$= 1.125 - 0.5(1.125 - 0.516) = 0.821$ ksf

b. <u>Lateral soil force</u>. Resisting side:

$$\gamma' = \Big[2 \text{ ft(weight of water)} + 4\text{(weight of saturated earth)} - \text{Seepage at F}\Big] \div 4$$

$$= \Big[2(0.0625) + 4(0.125) - 0.516\Big] \div 4$$

= 0.0273 kcf average, point G to point F

$$K_o = 1 - \sin\phi = 1 - 0.342 = 0.658 \qquad [3\text{-}4]$$

$$P_o = \frac{1}{2} K_o \gamma_b h^2 = \frac{1}{2}(0.658)(0.0273)(4)^2 = 0.1437 \text{ kips}$$

c. Overturning (paragraph 4-8).

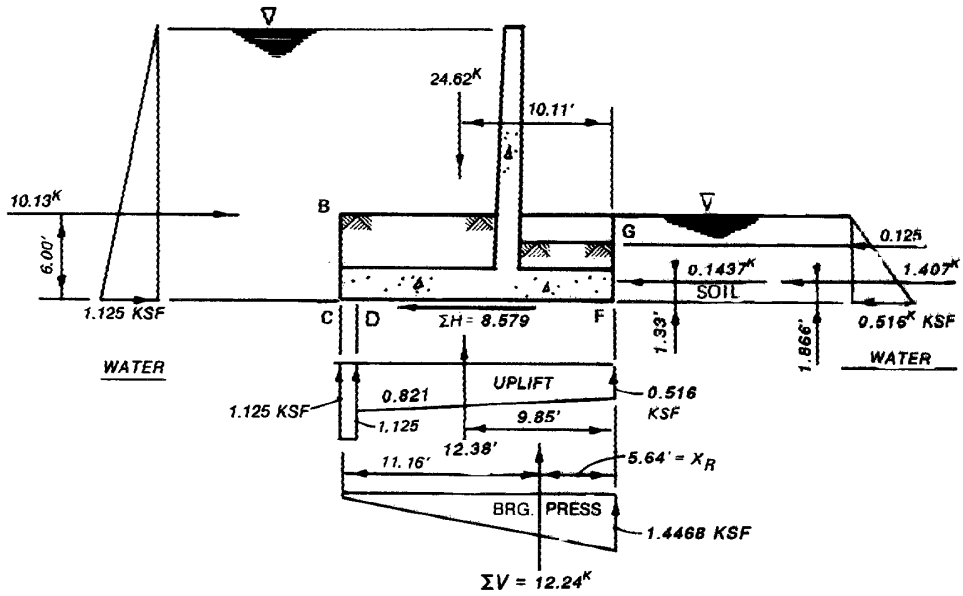

$$\begin{array}{rl} 24.62 \times 10.11 = & 248.91 \\ -12.38 \times 9.85 = & -121.94 \\ \hline \Sigma V = 12.24 \text{ kips} & \end{array}$$

$$\begin{array}{rl} -10.13 \times 6.00 = & -60.78 \\ 0.14 \times 1.33 = & 0.19 \\ 1.41 \times 1.87 = & 2.64 \\ \hline \Sigma H = -8.57 \text{ kips} & 69.02 \div 12.24 = 5.64 \text{ ft} = x_R \end{array}$$

$a = 3x_R = 3(5.64) = 16.92 \text{ ft} < 18.00 \text{ ft} = b$

Percent of base in compression $= \left(\frac{a}{b}\right)(100) = \left(\frac{16.92}{18}\right)100 = 94\% > 75\%$ (Table 4-2)

Criterion is satisfied.

d. Sliding stability (FS = 1.33 required by Table 4-2, paragraph 4-15).

$N' = \Sigma V = 12.24$ kips, $T = \Sigma H = 8.58$ kips

$$T \leqq \frac{N' \tan \phi + cL}{FS} \qquad [4\text{-}12]$$

Using the minimum required FS of 1.33 from Table 4-2 yields

$$8.58 \leqq \frac{12.24 \tan 20° + 0.4(16.92)}{1.33}$$

$$8.58 \leqq 11.22$$

Sliding criterion is satisfied.

e. Bearing capacity (Chapter 5).

$$\delta = \tan^{-1}\left(\frac{\Sigma H}{\Sigma V}\right) = \tan^{-1}\left(\frac{8.58}{12.24}\right) = 35.03° \text{ (Figure 5-1)}$$

$$e = \frac{B}{2} - x_R = \frac{18}{2} - 5.64 = 3.36 \text{ ft}$$

$$\bar{B} = B - 2e = 18 - 2(3.36) = 11.28 \text{ ft}$$

$$\gamma' = \gamma_b = 0.125 - 0.0625 = 0.0625 \ , \quad D = 4 \text{ ft}$$

$$q_o = \gamma' D = 0.0625(4) = 0.25 \text{ ksf} \qquad [5\text{-}8a]$$

$$\xi_{cd} = 1 + 0.2\left(\frac{D}{\bar{B}}\right) \tan\left(45° + \frac{\phi}{2}\right) = 1 + 0.2\left(\frac{4}{11.28}\right)(1.428) = 1.101 \qquad [5\text{-}4a]$$

$$\xi_{qd} = \xi_{\gamma d} = 1 + 0.1\left(\frac{D}{\bar{B}}\right) \tan\left(45 + \frac{\phi}{2}\right)$$

$$= 1 + 0.1\left(\frac{4}{11.28}\right)(1.428) = 1.051 \qquad [5\text{-}4c]$$

$$\xi_{qi} = \xi_{ci} = \left(1 - \frac{\delta}{90}\right)^2 = \left(1 - \frac{35.03}{90}\right)^2 = 0.373 \qquad [5\text{-}5a]$$

$$\xi_{\gamma i} = 0 \ , \quad \delta > \phi \qquad [5\text{-}5b]$$

$$\xi_{\gamma g} = \xi_{qg}\left[1 - \tan(\beta)\right]^2 = \left[1 - \tan(0)\right]^2 = 1 \qquad [5\text{-}7a]$$

$$\xi_{cg} = \xi_{qg} - \frac{1 - \xi_{qg}}{N_c \tan\phi} = 1 - \frac{1 - 1}{14.83\ (\tan 20°)} = 1 \qquad [5\text{-}7d]$$

$$\xi_{qt} = \xi_{\gamma t} = (1 - \alpha \tan\phi)^2 = (1 - 0)^2 = 1 \qquad [5\text{-}6a]$$

$$\xi_{ct} = \xi_{qt} - \frac{1 - \xi_{qt}}{N_c \tan\phi} = 1 - \frac{1 - 1}{14.83\ (\tan 20°)} = 1 \qquad [5\text{-}6c]$$

$N_c = 14.83$, $N_q = 6.40$, $N_\gamma = 2.87$ (Table 5-1)

$$Q = \overline{B}\left[(\xi_{cd}\xi_{ci}\xi_{ct}\xi_{cg}cN_c) + (\xi_{qd}\xi_{qi}\xi_{qt}\xi_{qg}q_oN_q) + \frac{(\xi_{\gamma d}\xi_{\gamma i}\xi_{\gamma t}\xi_{\gamma g}\overline{B}\gamma N_\gamma)}{2}\right] \qquad [5\text{-}2]$$

$$= 11.28\Big[(1.101)(0.373)(1)(1)(0.4)(14.83) + 1.051(0.373)(1)(1)(0.25)(6.4) + 1.051(0)(1)(1)(11.28)(0.0625)(2.87)(1/2)\Big] = 34.55 \text{ kips}$$

$N' = 12.24$ (ΣV for this problem)

$$FS = \frac{Q}{N'} = \frac{34.55}{12.24} = 2.82 > 2 \qquad [5\text{-}1]$$

Bearing criterion is satisfied (Table 4-2)

N-6. EXAMPLE 6. Analyze the wall for overturning, sliding and bearing capacity. Use the line of creep method to determine water pressures. Load Case I1, design flood.

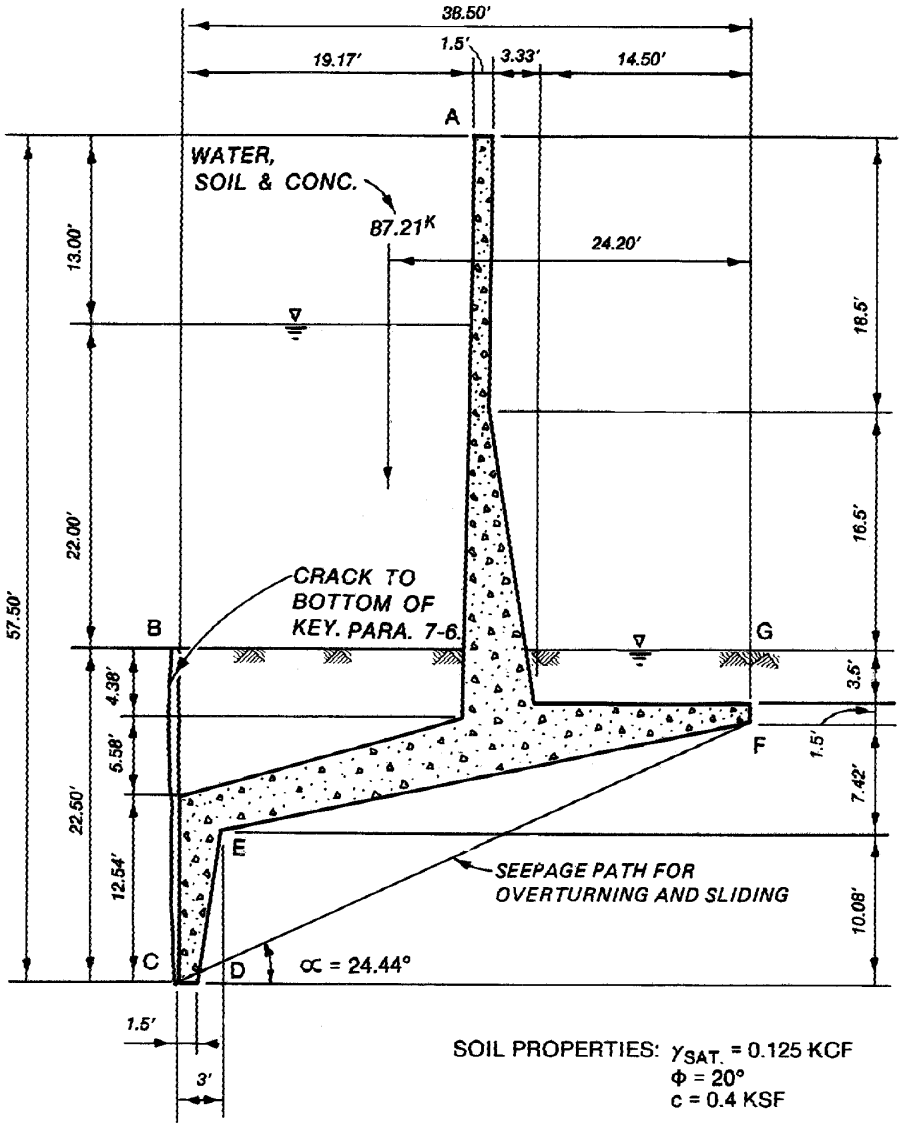

a. Water pressures (paragraph 3-19).

$$L_{CF} = \sqrt{(38.5)^2 + (17.5)^2} = 42.29 \text{ ft}, \quad L_{FG} = 5 \text{ ft}, \quad \Delta h = 22 \text{ ft}$$

$$L_S = L_{CF} + L_{FG} = 42.29 + 5 = 47.29 \text{ ft}$$

$$u_C = 44.5\ (0.0625) = 2.7813 \text{ ksf}$$

$$u_F = \left(27 \text{ ft} - \frac{22 \times 42.29}{47.29}\right) 0.0625 = 0.4579 \text{ ksf}$$

Compute water pressure at D and E. Prorate head loss along path CDEF.

Head loss along path CF $= \frac{42.29}{47.29}\ (22) = 19.674$ ft

$$L_S \text{ (concrete surface)} = L_{CD} + L_{DE} + L_{EF}$$

$$L_S = 1.5 + 10.19 \text{ ft} + 36.27 \text{ ft} = 47.96 \text{ ft}$$

Head loss at D $= \frac{1.5}{47.96}\ (19.674) = 0.6153$ ft

$$u_D = (44.5 - 0.6153)0.0625 = 2.743 \text{ ksf}$$

Head loss at E $= \frac{(1.5 + 10.19)}{47.96}\ (19.674) = 4.795$ ft

$$u_E = (34.42 - 4.795)0.0625 = 1.852 \text{ ksf}$$

b. Lateral soil force (resisting side, above point F).

$$K_o = 1 - \sin\phi = 1 - 0.342 = 0.658 \qquad [3\text{-}4]$$

$$\gamma' = [5\ (0.125) - 0.4579] \div 5 = 0.0334 \text{ kcf}$$

$$P_o = \frac{1}{2} K_o \gamma_b h^2 = \frac{1}{2}\ (0.658)\ (0.0334)\ (5)^2 = \underline{\underline{0.275 \text{ kips}}}$$

c. Lateral water force (driving side).

$h = 22.00 + 22.50 = 44.5$ ft, $\gamma_w = 0.0625$ ksf

$$P_w = \frac{1}{2}\gamma_w h^2 = \frac{1}{2}(0.0625)(44.5)^2 = \underline{\underline{61.88 \text{ kips}}}$$

d. Overturning stability (paragraph 4-8, Figure 4-6).

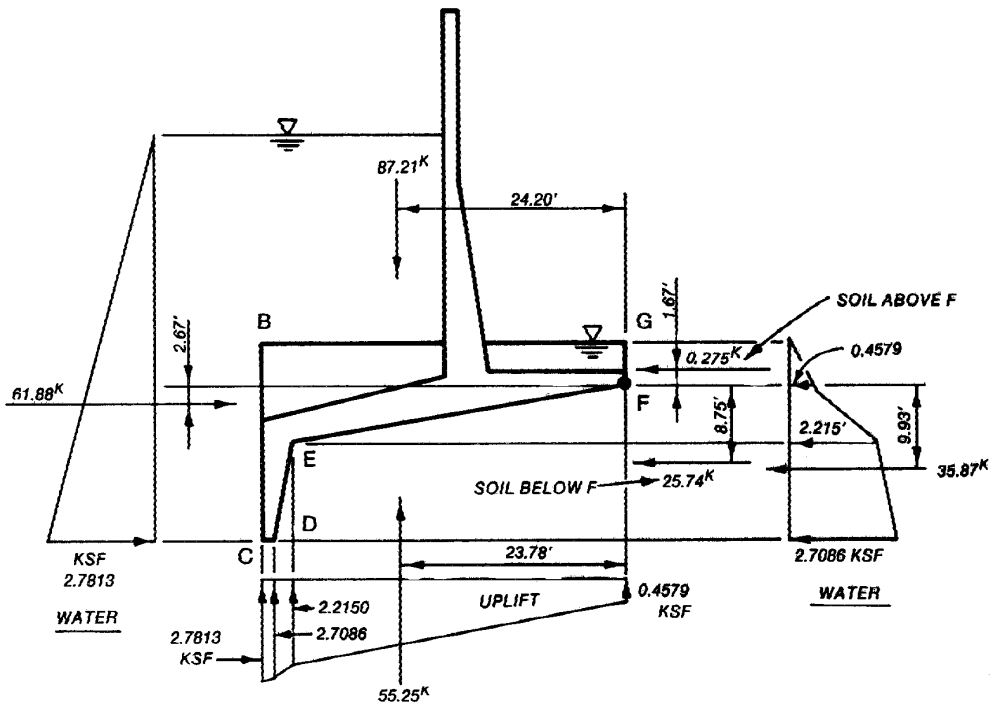

87.21	×	24.20	=	2110.48
-48.59	×	23.78	=	-1155.47
38.62	×	ΣV		

$$x_R = \frac{536.88}{38.62} = \underline{\underline{13.90 \text{ ft}}} > \frac{b}{3}$$

-61.88	×	-2.67	=	165.22
0.275	×	1.67	=	0.45
28.74	×	-8.75	=	-251.48
32.87	×	-10.11	=	-332.32
0 = ΣH			M_F =	536.88 k-ft

100 percent of base is in compression, overturning criteria satisified (Table 4-2).

e. Sliding stability (on Plane CF, paragraph 4-15).

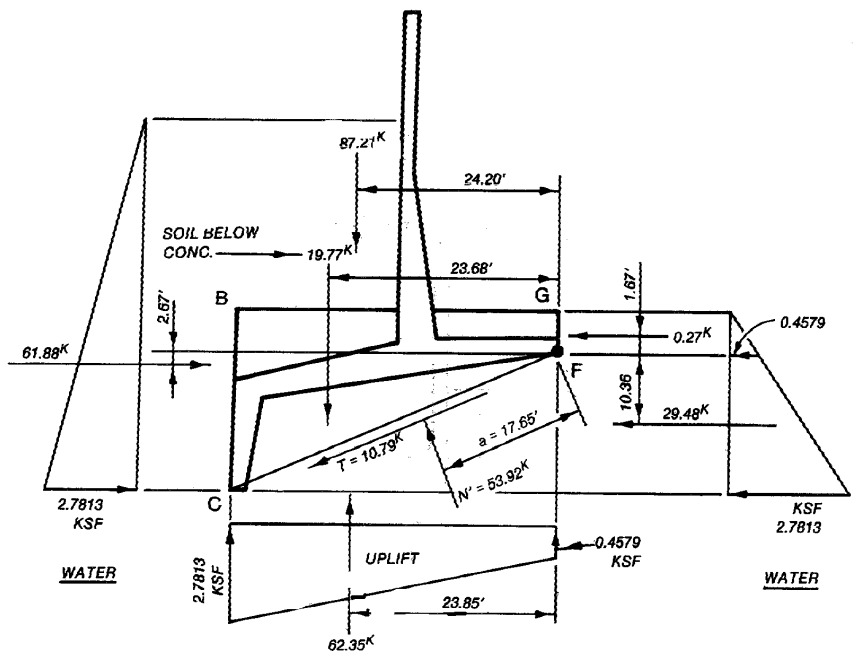

$$N' = \Sigma V \cos \alpha + \Sigma H \sin \alpha$$
$$T = \Sigma H \cos \alpha - \Sigma V \sin \alpha$$
$$N' = 44.63\ (0.9104) + 32.13\ (0.4137) = 53.92 \text{ kips}$$
$$T = 32.13\ (0.9104) - 44.63\ (0.4137) = 10.79 \text{ kips}$$
$$L_{CF} = 42.29 \text{ ft}$$

For sliding stability to be satisfied

$$T \leq \frac{N' \tan \phi + cL}{FS} \qquad [4\text{-}12]$$

$$L = L_{CF}$$

$$N' \tan \phi + cL_{CF} = 53.92\ (0.364) + 0.4\ (42.29) = 36.54 \text{ kips}$$

From Table 4-2, the minimum FS required is 1.5.

$$T \leqq \frac{36.54}{1.5}$$

$$10.79 \leqq 24.36$$

Criterion is satisfied.

f. Bearing capacity (Chapter 5).

$$\alpha = 24.44°, \quad \delta = \tan^{-1}\left(\frac{T}{N'}\right) = \tan^{-1}\left(\frac{10.79}{53.92}\right) = 11.32° \text{ (Figure 5-1)}$$

$$\alpha = 0.427 \text{ rad}$$

$$e = \frac{L_{CF}}{2} - a = \frac{42.29}{2} - 17.65 = 3.495$$

$$\bar{B} = L_{CF} - 2e = 42.29 - 2\ (3.495) = 35.30 \text{ ft}$$

$$D = 5 \text{ ft}, \ \gamma_b = 0.0625\ , \quad q_o = \gamma_b D = 0.3125 \text{ ksf} \qquad [5\text{-}8a]$$

$$\xi_{cd} = 1 + 0.2\left(\frac{D}{\bar{B}}\right) \tan\left(45 + \frac{\phi}{2}\right) = 1 + 0.2\left(\frac{5}{35.3}\right)(1.428) = 1.04 \qquad [5\text{-}4a]$$

$$\xi_{qd} = \xi_{\gamma d} = 1 + 0.1\left(\frac{D}{\bar{B}}\right) \tan\left(45 + \frac{\phi}{2}\right) = 1.02 \qquad [5\text{-}4c]$$

$$\xi_{qt} = \xi_{\gamma t} = (1 - \alpha \tan \phi)^2 = (1 - 0.427 \times 0.364)^2 = 0.7133 \qquad [5\text{-}6a]$$

$$\xi_{ct} = \xi_{qt} - \frac{1 - \xi_{qt}}{N_c \tan \phi} = 0.7133 - \frac{1 - 0.7133}{14.83 \times 0.364} = 0.66 \qquad [5\text{-}6c]$$

$$\xi_{qi} = \xi_{ci} = \left(1 - \frac{\delta}{90}\right)^2 = \left(1 - \frac{11.32}{90}\right)^2 = 0.764 \qquad [5\text{-}5a]$$

$$\xi_{\gamma i} = \left(1 - \frac{\delta}{\phi}\right)^2 = \left(1 - \frac{11.32}{20}\right)^2 = 0.188 \qquad [5\text{-}5b]$$

$N_c = 14.83$, $N_q = 6.40$, $N_\gamma = 2.87$ (Table 5-1)

From Equation 5-2

$$Q = \overline{B}\left(\xi_{cd}\xi_{ci}\xi_{ct}cN_c + \xi_{qd}\xi_{qi}\xi_{qt}q_oN_q + \frac{\xi_{\gamma d}\xi_{\gamma i}\xi_{\gamma t}\overline{B}\gamma N_\gamma}{2}\right) \qquad [5\text{-}2]$$

$$Q = 35.3\left[1.04(0.764)(0.66)(0.4)(14.83) + 1.02(0.764)(0.7133)(0.3125)(6.4) + \frac{1.02(0.188)(0.7133)(35.3)(0.0625)(2.87)}{2}\right] = 164.34 \text{ kips}$$

$$FS = \frac{Q}{N'} = \frac{164.34}{53.92} = 3.05 > 3.00 \quad \text{(Table 4-2)}$$

Bearing criterion is satisfied.

N-7. EXAMPLE 7. Analyze the wall for overturning, sliding and bearing capacity. Load Case C2b, breaking wave condition.

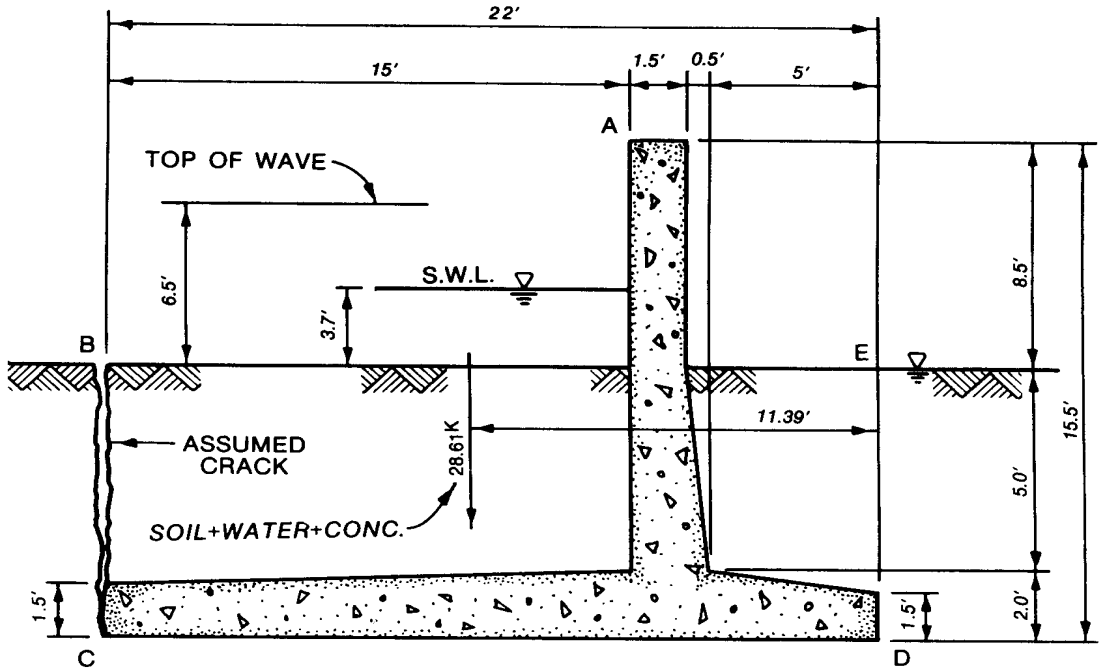

SOIL PROPERTIES: $\gamma_{SAT} = 0.125$ KCF
$\phi = 0°$
c = 0.90 KSF

WATER: $\gamma_W = 0.064$ KCF

a. Water pressures (paragraphs 3-19 and 3-24d,f). Seepage from still water level (swl) (paragraph 3-24f):

L_{CD} = 22 ft, L_{DE} = 7.0 ft, L_S = 22 + 7 = 29 ft

u_B = 3.7(0.064) = 0.237 ksf

u_C = 10.7(0.064) = 0.685 ksf

$$u_D = \left[10.7 - \frac{3.7(22)}{29}\right] 0.064 = 0.505 \text{ ksf} \quad \text{(on line of creep)}$$

u_E = 0.0 (end creep, tail water)

Wave force (paragraph 3-24): Increase in static force, due to wave crest, above point C:

$$\frac{1}{2}(6.5 + 7.0)^2(0.064) - \frac{1}{2}(3.7 + 7.0)^2(0.064) = 5.832 - 3.664 = 2.168 \text{ kips}$$

$$5.832(13.5)\frac{1}{3} - 3.664(10.7)\frac{1}{3} = 13.176 \text{ ft-k}$$

$$2.168 \text{ k/LF acting at } \frac{13.176}{2.168} = 6.077 \text{ ft above point C.}$$

The dynamic force of the breaking wave is calculated from procedures found in Chapter 7 of the Shore Protection Manual.

Dynamic force of breaking wave = 5.176 kips at swl

b. Soil force (resisting side).

$K_o = 1.00$ (at-rest)

$\gamma' = \gamma_{sat}$ - seepage uplift

$\gamma' = [7(0.125) - 0.505] \div 7 = 0.0529$ kcf

$$P_o = \frac{1}{2}K_o\gamma_b h^2 = \frac{1}{2}(1.00)(0.0529)(7)^2 = \underline{\underline{1.296 \text{ kips}}}$$

c. Overturning (paragraph 4-8). Initially, all of the base is assumed to be in compression. Full hydrostatic uplift is applied to any part of the base not in compression. The percent of the base in compression is recomputed until the assumed value equals the computed one. The final solution is shown below.

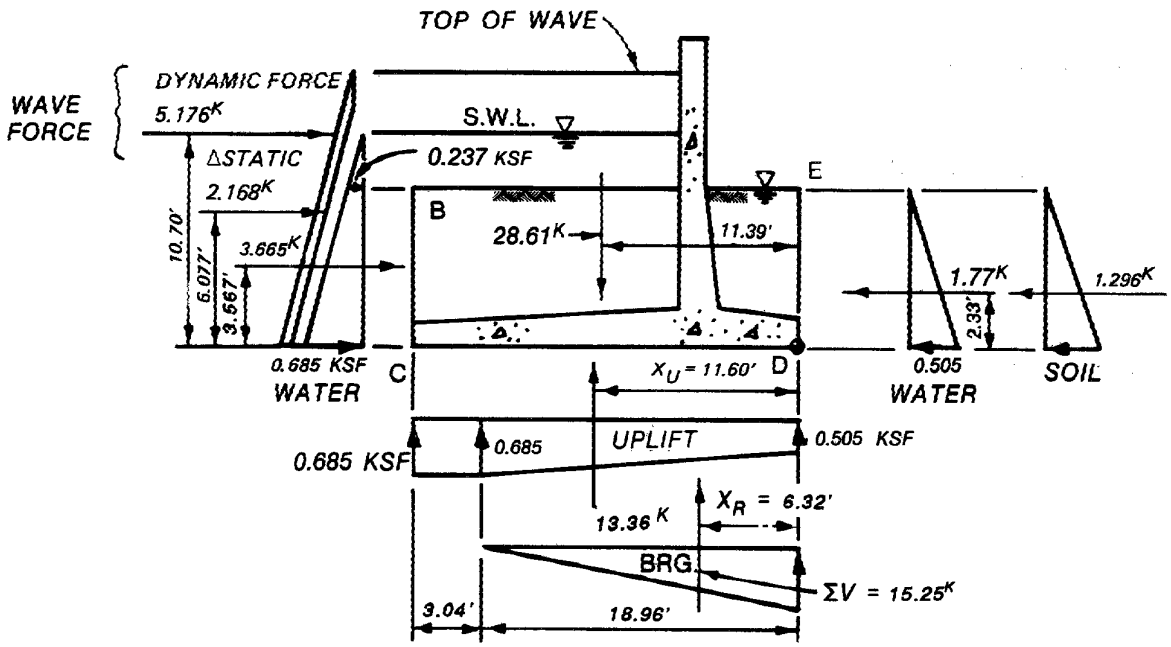

$$\begin{array}{rcl} 28.61 \times 11.39 & = & 325.87 \\ -13.36 \times 11.60 & = & -154.98 \\ \hline \Sigma V = 15.25 \text{ kips} & & \end{array}$$

$$\begin{array}{rcl} -5.176 \times 10.700 & = & -55.38 \\ -2.168 \times 6.077 & = & -13.18 \\ -3.665 \times 3.567 & = & -13.07 \\ 1.77 \times 2.333 & = & 4.12 \\ 1.296 \times 2.333 & = & 3.02 \\ \hline \Sigma H = -7.943 \text{ kips} & & 96.40 \div 15.25 = 6.32 \text{ ft} = x_R \end{array}$$

$$a = 3x_R = 3(6.32) = 18.96 \text{ ft}$$

Percent of base in compression $= \left(\frac{a}{b}\right)100 = \left(\frac{18.96}{22}\right)100 = 86.18\% > 60\%$ (Table 4-3)

Overturning criterion is satisfied.

d. Sliding stability (paragraph 4-15).

$$T \leq \frac{N' \tan \phi + cL}{FS} \qquad [4\text{-}12]$$

$N' = \Sigma V = 15.25$ kips, $T = \Sigma H = 7.94$ kips

Using the minimum required FS of 1.25 given in Table 4-3 yields

$$7.40 \leqq \frac{15.25 \tan 0° + 0.9(18.96)}{1.25}$$

$$7.40 \leqq 13.65$$

Sliding criterion is satisfied.

e. Bearing capacity (Chapter 5).

$$\delta = \tan^{-1}\left(\frac{\Sigma H}{\Sigma V}\right) = \tan^{-1}\left(\frac{7.94}{15.25}\right) = 27.50° \text{ (Figure 5-1)}$$

$$e = \frac{B}{2} - x_R = \frac{22}{2} - 6.32 = 4.68 \text{ ft}$$

$$\bar{B} = B - 2e = 22 - 2(4.68) = 12.64 \text{ ft}$$

$N_c = 5.14$, $N_q = 1.00$ (Table 5-1)

$D = 7$ ft, $\gamma_b = \gamma' = 0.125 - 0.064 = 0.061$ kcf

$$q_o = \gamma' D = 0.061(7) = 0.427 \text{ ksf} \qquad [5\text{-}8a]$$

$$\xi_{cd} = 1 + 0.2\left(\frac{D}{\bar{B}}\right) = 1 + 0.2\left(\frac{7}{12.64}\right) = 1.111 \qquad [5\text{-}4a]$$

$$\xi_{qd} = 1.00 \qquad [5\text{-}4b]$$

$$\xi_{ci} = \xi_{qi} = \left(1 - \frac{\delta}{90}\right)^2 = \left(1 - \frac{27.50}{90}\right)^2 = 0.482 \qquad [5\text{-}5a]$$

From Equation 5-2

$$Q = \bar{B}\left(\xi_{cd}\xi_{ci}cN_c + \xi_{qd}\xi_{qi}q_oN_q\right)$$

$$Q = 12.64\left[1.111(0.482)(0.9)(5.14) + 1.00(0.482)(0.427)(1.00)\right]$$

$$Q = 33.91 \text{ kips}$$

Using Equation 5-1 yields

$$FS = \frac{Q}{N'} = \frac{33.91}{15.25} = 2.22 > 1.50 \quad \text{(Table 4-3)}$$

Bearing criterion is satisfied.