Appendix D
Example Problems - Sliding Analysis for Single and Multiple Wedge Systems

D-1. Examples of typical static loading conditions for single and multiple wedge systems are presented in this appendix.

D-2. These examples are provided to clearly demonstrate the procedure for applying the general wedge equation to the sliding analysis of single and multiple wedge systems. The variations of uplift pressure, orientation of failure planes, etc., used in the examples were only selected to simplify the calculations and are not intended to represent the only conditions to be considered during the design of a hydraulic structure.

Example 1: Single Wedge
Determine the factor of safety against sliding for the following single wedge system

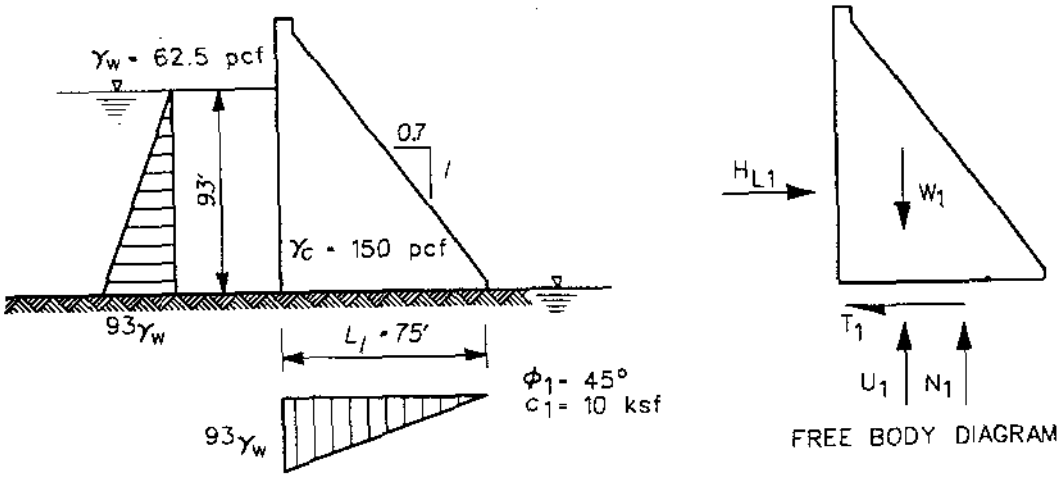

General Wedge Equation

$$P_{i-1} - P_i = \frac{\left[\left(W_i + V_i\right)\cos\alpha_i - U_i + \left(H_{Li} - H_{Ri}\right)\sin\alpha_i\right]\frac{\tan\phi_i}{FS_i} - \left(H_{Li} - H_{Ri}\right)\cos\alpha_i + \left(W_i + V_i\right)\sin\alpha_i + \frac{c_i}{FS_i}L_i}{\left(\cos\alpha_i - \sin\alpha_i\frac{\tan\phi_i}{FS_i}\right)}$$

Solve for Safety Factor (*FS*)

$i = 1 \quad H_{RI} = 0 \quad V_1 = 0 \quad P_o \quad P_1 = 0 \quad \alpha_1 = 0 \quad \cos\alpha_1 = 1 \quad \sin\alpha_1 = 0$

$$o = \left(W_1 - U_1\right)\frac{\tan 15}{FS} - H_{LI} + \frac{c_i}{FS}L_1$$

$$H_{LI} = \frac{1}{2}(93)^2\gamma_w = 270.3^k \quad U_1 = \frac{1}{2}(75)(93)\gamma_w = 218.0^k\uparrow \quad W_1 = 562.5^k\downarrow$$

$$FS = \frac{\left(W_1 - U_1\right)\tan 45° + c_i L_i}{H_{L_1}}$$

$$FS = \frac{(562.5 - 218.0)(1) + 10(75)}{270.3} = \frac{(344.5 + 750)}{270.3} = 4.05$$

$\boxed{FS = 4.05}$

Example 2: Multiple Wedges
Determine the factor of safety against sliding for the following five wedge system

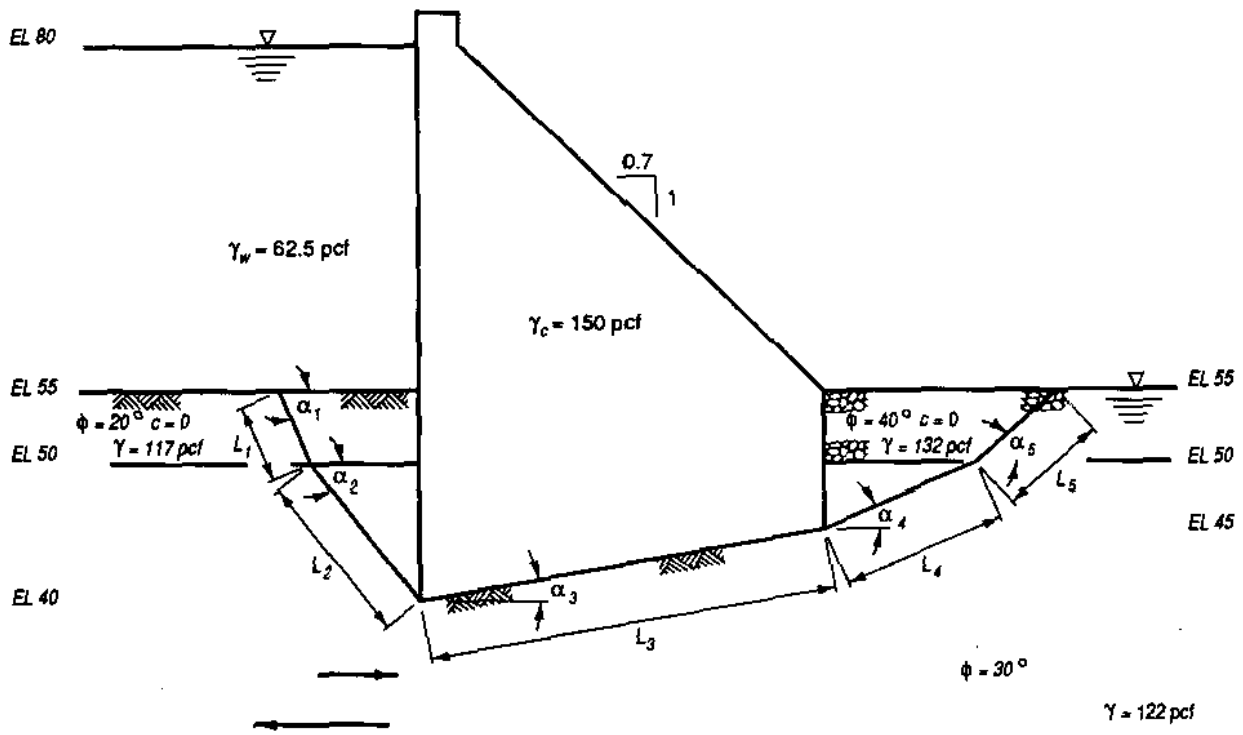

Sliding Stability Analysis
Example: Five Wedge System

Free Body Diagrams of Wedges

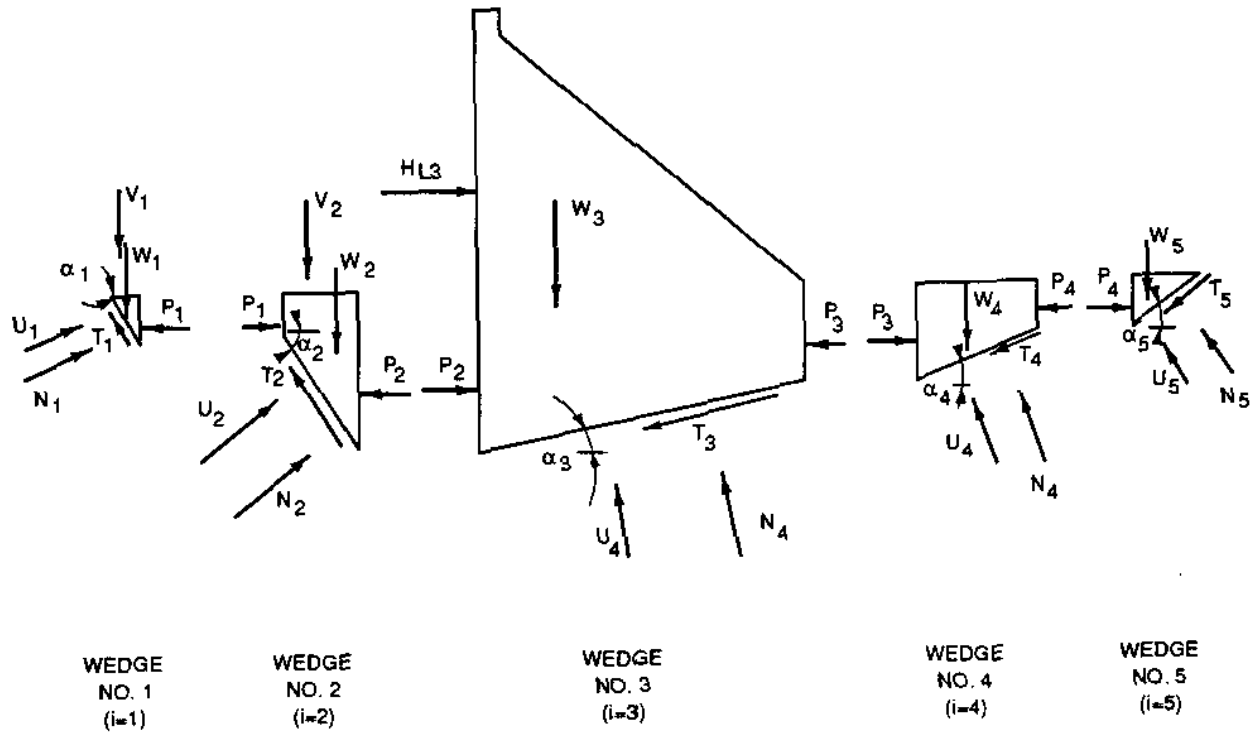

Sliding Stability Analysis
Example: Five Wedge System

General Wedge Equation

$$P_{i-1} - P_i = \frac{\left[\left(W_i + V_i\right)\cos\alpha_i - U_i + \left(H_{Li} - H_{Ri}\right)\sin\alpha_i\right]\dfrac{\tan\phi_i}{FS_i} - \left(H_{Li} - H_{Ri}\right)\cos\alpha_i + \left(W_i + V_i\right)\sin\alpha_i + \dfrac{c_i}{FS_i}L_i}{\left(\cos\alpha_i - \sin\alpha_i\dfrac{\tan\phi_i}{FS_i}\right)}$$

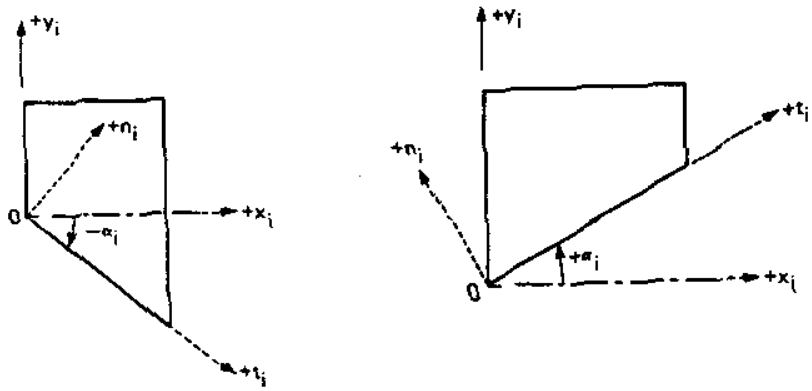

Sign Convention for General Equation

Wedge Forces for Trial Safety Factor of 1.5

$\underline{i = 1}$ $\quad H_{Li} = H_{Ri} = 0$

$$\tan\phi_d = \frac{\tan\phi_1}{FS_1} = \frac{\tan 20}{1.5} \qquad \phi_d = \tan^{-1}(0.243) = 13.64°$$

$$\alpha_1 = -\left(45° + \frac{\phi_d}{2}\right) = -51.82°$$

This orientation of the failure path is only true if the stratification and surface are horizontal

$$\sin(-51.82) = -0.786$$

$$\cos(-51.82) = 0.618$$

$$L_i = 5/\left|\sin(-51.82)\right| = 5/0.786 + 6.36'$$

Sliding Stability Analysis
Example: Five Wedge System

$$\left.\begin{aligned} W_1 &= \tfrac{1}{2}(0.117)(5)\times 6.36\cos(-51.82) = 1.15^k\downarrow \\ V_1 &+ (25\times .0625)\,6.36\cos(-51.82) = 6.14^k\downarrow \end{aligned}\right] 7.29^k\downarrow$$

$$U_1 = \frac{1}{2}(.0625)(25+30)\,6.36 = 10.93^k\rightarrow$$

$$(P_o - P_1) = \frac{\left[7.29(0.618) - 10.93\right]\dfrac{\tan 20}{1.5} + 7.29(-0.786)}{\left[0.618 - (-0.786)\dfrac{\tan 20}{1.5}\right]} = -9.01^k$$

$$\boxed{(P_o - P_1) = \overset{\leftarrow}{9.01^k}}$$

$\underline{i = 2}$ $H_{L2} = H_{R2} = 0$

$$\tan\phi_d = \frac{\tan\phi_2}{FS_2} = \frac{\tan 30}{1.5} \qquad \phi_d = \tan^{-1}(0.385) = 21.05^\circ$$

$$\alpha_2 = -\left(45 + \frac{\phi_d}{2}\right) = -55.53^\circ$$

$$\sin(-55.53) = 0.8244 \qquad \cos(-55.53) = 0.566$$

$$L_2 = 10/|\sin(-55.53)| = 12.13'$$

$$W_2 = 0.117(5)(12.13\times 0.566) + \frac{1}{2}(.122)(10)(12.13\times 0.566) = 8.20^k\downarrow$$

$$V_2 = (25\times .0625)(12.13\times 0.566) = 10.73^k\downarrow$$

$$U_2 = \frac{1}{2}(0.0625)(30 + 40)(12.13) = 26.53k\rightarrow$$

Sliding Stability Analysis
Example: Five Wedge System

$$(P_1 - P_2) = \frac{\left[18.93\,(0.566) - 26.53\right]\dfrac{\tan 30}{1.5} + 18.93\,(-.8244)}{\left[0.566 - (-0.8244)\dfrac{\tan 30}{1.5}\right]} = -24.56^k$$

$$\boxed{(P_1 - P_2) = \overleftarrow{24.56}^k}$$

$\underline{i = 3}$ $\quad \alpha_3 = 9.5° \quad L_3 = 5/\sin 9.5 = 30.3'$

$$H_{L3} = \frac{1}{2}(0.0625)\,(25)^2 = \overrightarrow{19.53}^k \qquad H_{R3} = 0$$

$$U_3 = \frac{1}{2}(0.0625)\,(40 + 10)\,(30.3) = 47.33^k \nwarrow$$

$$W_3 = 122.4^k \downarrow$$

$\sin 9.5° = 0.165 \qquad \cos 9.5 = 0.986$

$$(P_2 - P_3) = \frac{\left[122.4\,(.986) - 44.11\right]\dfrac{\tan 30}{1.5} - 19.53\,(0.986) + 122.4(.165)}{\left(.986 - .165 \times \dfrac{\tan 30}{1.5}\right)} = 32.97^k$$

$$\boxed{(P_2 - P_3) = \overrightarrow{32.97}^k}$$

$\underline{i = 4}$ $\quad H_{L4} = H_{R4} = V_4 = 0$

$$\tan \phi_d = \frac{\tan \phi_4}{FS_4} = \frac{\tan 30°}{1.5} \qquad \phi_d = \tan^{-1}(0.385) = 21.05°$$

$$\alpha_4 = 45 - \frac{1}{2}\,\phi_d + 34.475°$$

$\sin(34.475) = 0.566 \qquad \cos(34.475°) = 0.824$

Sliding Stability Analysis
Example: Five Wedge System

$L_4 = 5/\sin 34.475 = 8.83'$

$W_4 = (0.132)(5)(8.83^x .824) + \frac{1}{2}(0.122)(5)(8.83^x 0.824) = 7.02^k \downarrow$

$U_4 = \frac{1}{2}(0.0625)(5 + 10)(8.83) = 4.14^k \nwarrow$

$$(P_3 - P_4) = \frac{\left[7.02\,(.824) - 4.14\right]\frac{\tan 30}{1.5} + 7.02\,(.566)}{\left(0.824 - 0.566\,\frac{\tan 30}{1.5}\right)} = 7.59^k$$

$$\boxed{(P_3 - P_4) = \overrightarrow{7.59}^k}$$

$\underline{i = 5}$ $\quad H_{L5} = H_{R5} = V_5 = 0$

$\tan \phi_d = \frac{\tan \phi_5}{FS_5} = \frac{\tan 40}{1.5}$ $\qquad \phi_d = \tan^{-1}(0.559) = 29.22°$

$\alpha_5 = \left(45 - \frac{1}{2}\phi_d\right) = 30.38$ $\qquad \sin 30.38 = 0.5058$ $\qquad \cos 30.38 = 0.8626$

$L_5 = 5/\sin 30.38 = 9.89'$

$W_5 = \frac{1}{2}(0.132)\,5\,(9.89^x 0.8626) = 2.82^k \downarrow$

$U_5 = \frac{1}{2}(0.0625)(5)(9.89) = 1.545^k \nwarrow$

$$(P_4 - P_5) = \frac{\left[2.82^x .863 - 1.54\right]\frac{\tan 40}{1.5} + 2.82^x .506}{\left(.863 - .506\,\tan\frac{40}{1.5}\right)} = 3.32^k$$

$$\boxed{(P_4 - P_5) = \overrightarrow{3.32}^k}$$

Sliding Stability Analysis
Example: Five Wedge System

Summary: Wedge Forces for Trial Safety Factors

FS = 1.5

i	α_i	L_i	H_{Li}	H_{Ri}	V_i	W_i	U_i	$(P_{i-1} - P_i)$
1	-51.82	6.36	0	0	6.14	1.15	10.93	-9.01
2	-55.53	12.13	0	0	10.73	8.20	26.53	-24.56
3	9.5	30.3	19.53	0	0	122.4	47.33	32.97
4	34.47	8.83	0	0	0	7.02	4.14	7.59
5	30.38	9.89	0	0	0	2.82	1.54	3.32
								ΔP_R = 10.31

FS = 2.5

i	α_i	L_i	H_{Li}	H_{Ri}	V_i	W_i	U_i	$(P_{i-l} - P_i)$
1	-49.14	6.61	0	0	6.75	1.27	11.36	-9.10
2	-51.5	12.78	0	0	12.43	9.50	27.95	-25.48
3	9.5	30.3	19.53	0	0	122.4	47.33	19.65
4	38.5	8.0	0	0	0	6.06	3.76	6.26
5	35.72	8.56	0	0	0	2.29	1.34	2.45
								ΔP_R = -6.20

FS = 2.0

i	α_i	L_i	H_{Li}	H_{Ri}	V_i	W_i	U_i	$(P_{i-1} - P_i)$
1	-50.16	6.51	0	0	6.52	1.22	11.19	-9.06
2	-53.05	12.51	0	0	11.73	8.97	27.37	-25.13
3	9.5	30.3	19.53	0	0	122.4	47.33	24.53
4	36.95	8.33	0	0	0	6.43	3.9	6.73
5	33.62	9.03	0	0	0	2.48	1.41	2.75
								ΔP_R = -0.18

Sliding Stability Analysis
Example: Five Wedge System

Graphical Solution for Safety Factor
The safety factor for sliding equilibrium of the five wedge system is determined from:
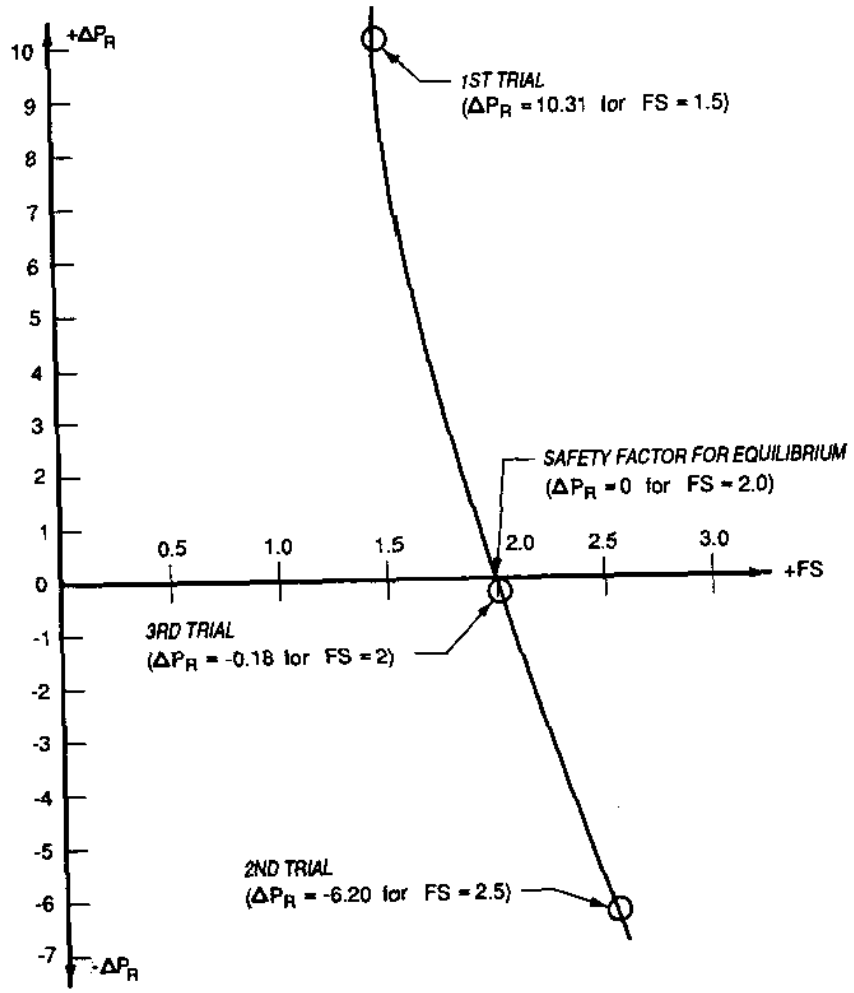
$$\sum_{i=1}^{5} (P_{i-1} - P_i) = \Delta P_R \quad \begin{cases} \Delta P_R = \text{Safety factor for equilibrium} \\ \Delta P_R \neq 0 \quad \text{For trial safety factors} \end{cases}$$