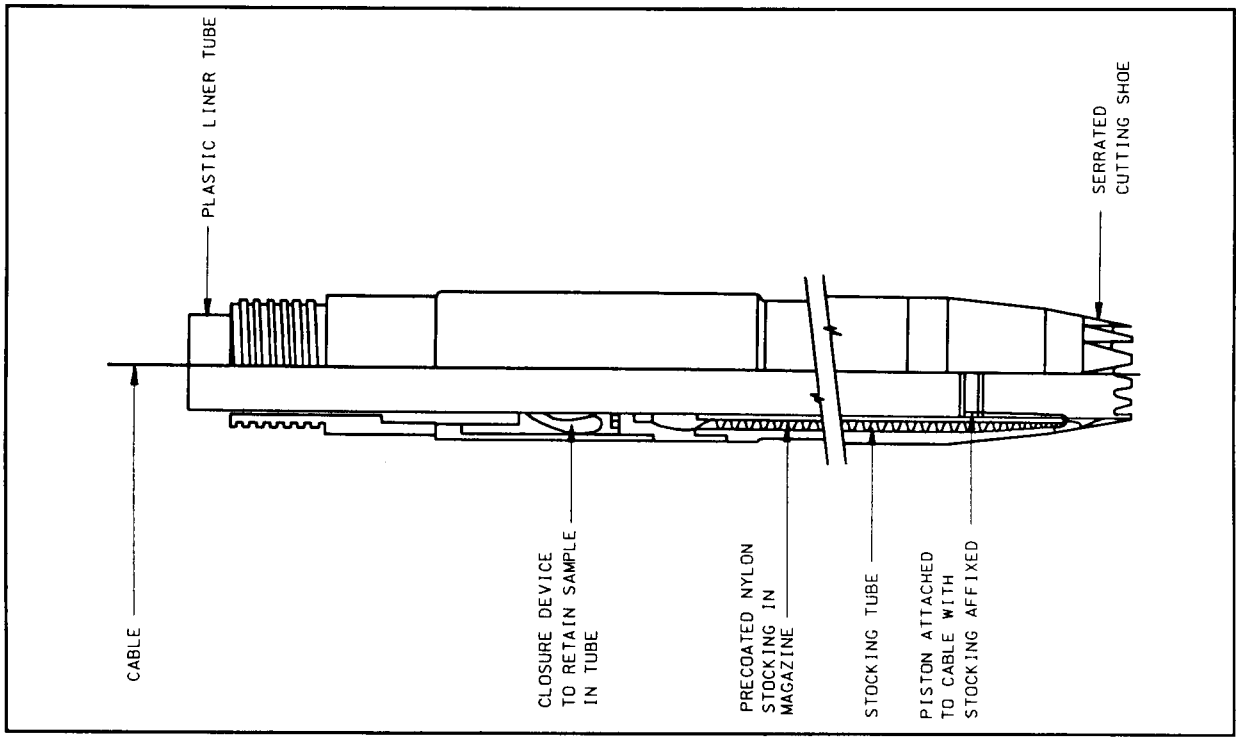

Figure 5-10. Schematic diagram of the Delft continuous soil sampler

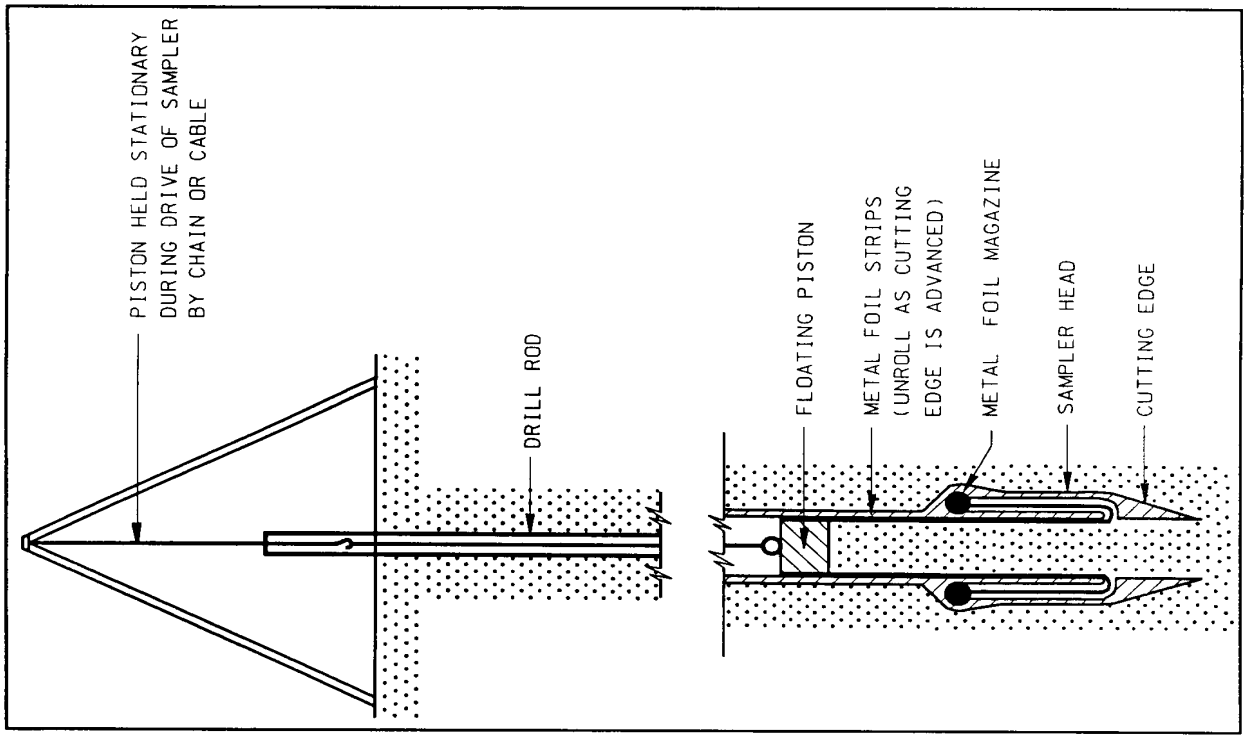

Figure 5-9. Schematic diagram of the Swedish foil sampler